U.S. DEPARTMENT OF AGRICULTURE
FOREST SERVICE, REGION 1

CONSTRUCTION PLANS FOR:

MEADOW CREEK BRIDGE REPLACEMENT
NFSR #328 MP 4.0

PALOUSE RANGER DISTRICT
NEZ PERCE-CLEARWATER NATIONAL FOREST
LATAH COUNTY, IDAHO

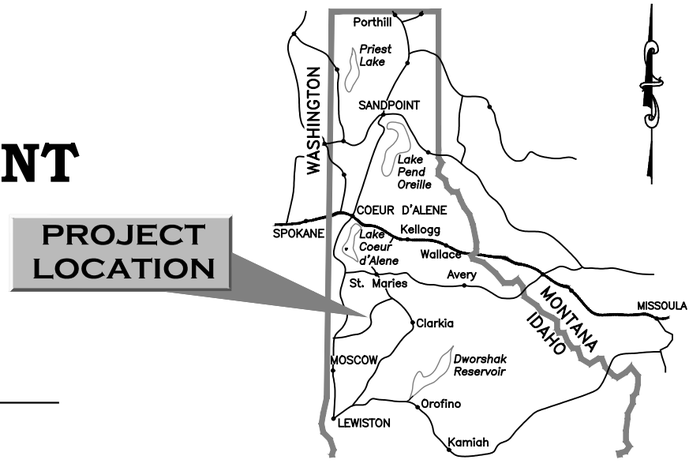

NORTHERN IDAHO LOCATION MAP

INDEX TO SHEETS

NO.	DESCRIPTION
1	TITLE SHEET
2	ESTIMATED QUANTITIES & GENERAL NOTES
3	ROAD TYPICAL SECTION & POINT TABLES
4	ROAD PLAN & PROFILE
5	BRIDGE GENERAL LAYOUT
6	STRUCTURE EXCAVATION & BACKFILL
7	FOUNDATION PLAN
8	RIPRAP DETAILS
9 - 11	ABUTMENT DETAILS
12 - 16	SUPERSTRUCTURE DETAILS
17	STREAM DEWATERING REQUIREMENTS
XS1	ROAD CROSS SECTIONS

MATERIAL SOURCES
GOVERNMENT FURNISHED
Waste Site
CONTRACTOR FURNISHED
All Materials are Contractor Furnished

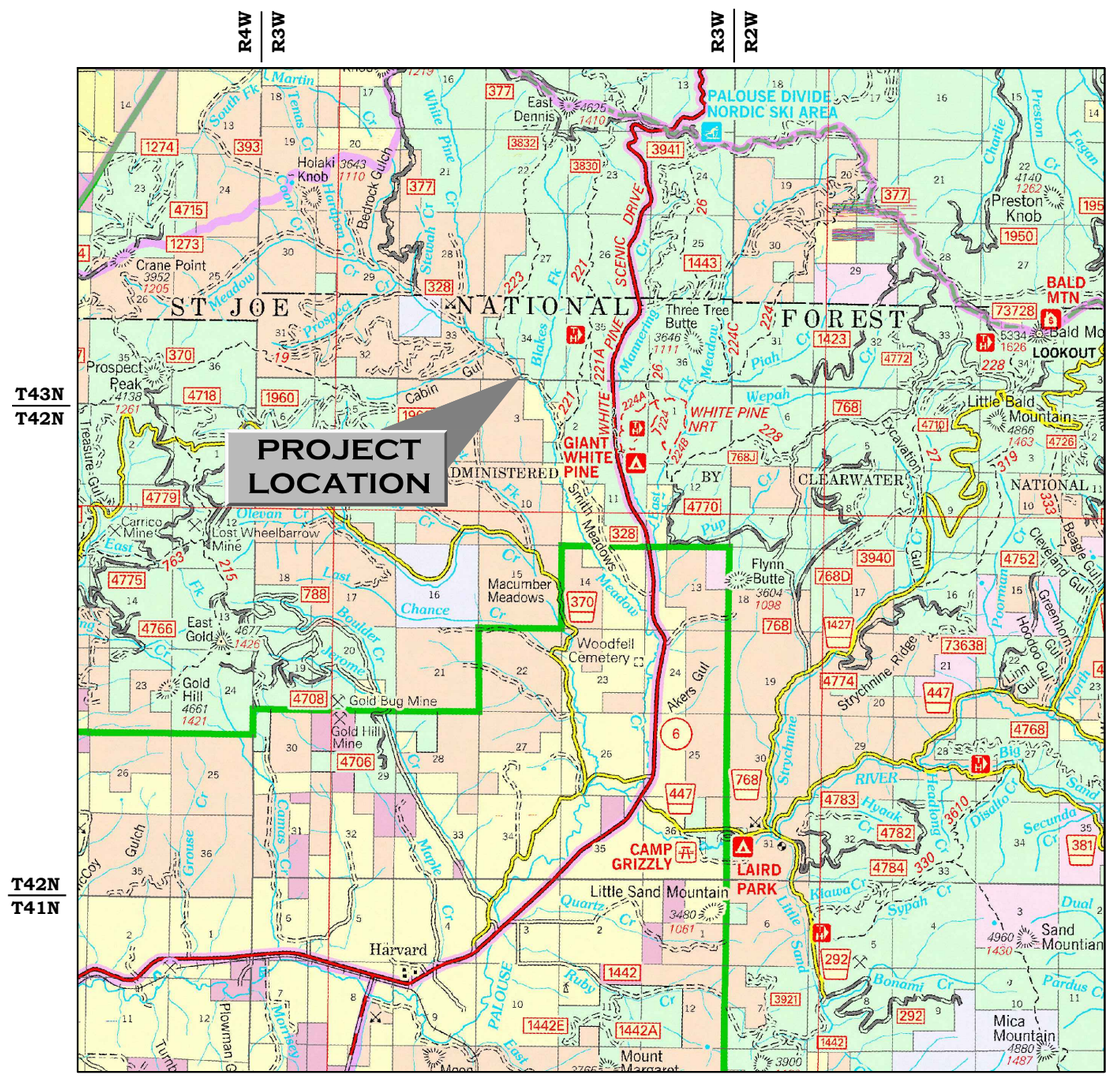

VICINITY MAP

RECOMMENDED:

_____ DATE _____
DISTRICT RANGER
PALOUSE RANGER DISTRICT

RECOMMENDED:

_____ DATE _____
FOREST ENGINEER
NEZ PERCE-CLEARWATER NATIONAL FOREST

APPROVED:

_____ DATE _____
FOREST SUPERVISOR
NEZ PERCE-CLEARWATER NATIONAL FOREST

APPROVED:

_____ DATE _____
REGIONAL ENGINEER
NORTHERN REGION

DRAFT PLANS
Not for Construction

DJ&A, P.C.
CONSULTING ENGINEERS & LAND SURVEYORS
3203 RUSSELL STREET, MISSOULA, MONTANA 59801-8591
PHONE 406/721-4320 FAX 406/549-6371

DWG. NO. R2239

SUMMARY OF ESTIMATED QUANTITIES

ITEM NO.	ITEM DESCRIPTION	UNIT	QUANTITY		COMMENTS
15101	MOBILIZATION	Lump Sum	ALL		
15201	CONSTRUCTION SURVEY AND STAKING	Lump Sum	ALL		LICENSED SURVEYOR REQUIRED
15713	SOIL EROSION & POLLUTION CONTROL	Lump Sum	ALL		INCLUDES DEWATERING. SEE GENERAL NOTES.
20302	REMOVAL OF EXISTING TIMBER BRIDGE, DISPOSAL METHOD A	Each	1		
20411	UNCLASSIFIED BORROW EXCAVATION	Cubic Yard	490	CQ	CONTRACTOR FURNISHED MATERIAL FROM COMMERCIAL SOURCE. IN PLACE QUANTITY, NOT ADJUSTED FOR SHRINK / SWELL.
20803	STRUCTURAL BACKFILL	Cubic Yard	120	CQ	CONTRACTOR FURNISHED FROM COMMERCIAL SOURCE.
20804	STRUCTURE EXCAVATION	Lump Sum	ALL		SEE SHEET 6. SUBMIT EXCAVATION PLAN FOR APPROVAL BEFORE BEGINNING WORK.
25101	PLACED RIPRAP, CLASS 3	Cubic Yard	130	CQ	CONTRACTOR FURNISHED MATERIAL FROM A COMMERCIAL SOURCE.
27201	GEOCELL ABUTMENT STABILIZATION, 6" DEPTH	Square Yard	43		
30207	CRUSHED AGGREGATE SURFACING, COMPACTION METHOD 1	Cubic Yard	55	CQ	CONTRACTOR FURNISHED MATERIAL FROM A COMMERCIAL SOURCE.
55218	PRECAST CONCRETE MEMBER, GRADE BEAM	Each	2		
55502	STRUCTURAL STEEL GIRDERS, FURNISHED, FABRICATED, ERECTED	Pound	42,000		
55701A	STRUCTURAL TIMBER AND LUMBER, TREATED, RUNNING PLANKS	MFBM	2.72		
55701B	STRUCTURAL TIMBER AND LUMBER, GLUED LAMINATED, TREATED, DECK PANELS, CURBS & ABUTMENT BACKWALLS	MFBM	9.10		
62504	SEEDING, DRY METHOD	Acre	0.1		INCLUDES MULCH.
63306	POSTS, WOOD	Linear Foot	40		
63307	OBJECT MARKER, TYPE 3	Each	4		

CQ= Contract Quantity (See SECTION 109.02(b) of the STANDARD SPECIFICATIONS)

GENERAL NOTES

SPECIFICATIONS: Construct the project in compliance with Federal Highway Administration Standard Specifications for Construction of Road and Bridges on Federal Highway Projects (FP-14) and applicable Forest Service Supplemental Specifications (FSSS).

DEWATERING & EROSION CONTROL PLAN: Submit a Dewatering and Soil Erosion and Sediment Control Plan to the Contracting Officer for approval at least seven (7) days prior to beginning work. See Section 157 of the Supplemental Specifications for details. Construct temporary means to divert the flow of the live stream as necessary to perform work, including dewatering for bank construction and replanting. Do not pump water from excavations directly into the live stream. See Stream Dewatering Requirements on Sheet 6 & 17.

DISPOSAL: All materials designated for removal become the property of the Contractor and are to be disposed of by removing from the forest in an environmentally safe manner in accordance with all Local, State and Federal requirements.

TEMPORARY TRAFFIC CONTROL: Submit a Temporary Traffic Control Plan to the Contracting Officer for approval at least 30 days prior to intended use.

DESIGN NOTES

BRIDGE DESIGN: This structure is designed for HL-93 loading in accordance with AASHTO LRFD Bridge Design Specifications, 8th edition with current interims.

MATERIAL NOTES

CONCRETE: Use Class A(AE) for all cast-in-place and precast, non-prestressed concrete with F'c = 5000 psi at 28 days and an entrained air content of 5% ± 1%. Finish all precast elements with a Class 2- Rubbed Finish. Make all concrete in accordance with an approved mix design. Chamfer all exposed edges of concrete 3/4" and fillet all acute angles 3" unless otherwise noted.

REINFORCING STEEL: Use non-prestressed reinforcing of the deformed type conforming to AASHTO M31 (ASTM A615), Grade 60. Concrete cover shall be as shown; where not shown it shall conform to AASHTO. Cut and bend steel in accordance with ACI 315.

SUPERSTRUCTURE STRUCTURAL STEEL: Use superstructure weathering steel shapes, plates and bars conforming to the requirements of AASHTO M270, Grade 50W (ASTM A709, Grade 50W). Use bolts conforming to AASHTO M 164 (ASTM A325) Type 3 with Type 3 nuts & washers. The steel fabricator must be certified by AISC (American Institute for Steel Construction) in the Simple Bridges Category. Use structural steel made of new material. Provide certified copies of mill test reports for all structural steel and bolts.

Main load carrying members subjected to tensile stress (girders) require Charpy V-Notch testing in accordance with ASTM A709 Supplemental Requirements, S83 for Temperature Zone 2.

SUBSTRUCTURE STRUCTURAL STEEL: Use shapes, plates and bars conforming to ASTM A36 and galvanize in accordance with AASHTO M111 (ASTM A123) except when covered by 1" or more of concrete. Use hardware meeting the requirements of ASTM A307 except as noted. Galvanize hardware in accordance with AASHTO M232 (ASTM A153) unless covered by 1" or more of concrete.

WELDING: Weld in accordance with the Bridge Welding Code, AWS D1.5 with E70XX electrodes. A certified welder is required.

GLUED LAMINATED MEMBERS: Furnish Glued Laminated members conforming to the current National Design Specifications for Wood Construction (NDS), Combination Symbol 3, 4 or 5 as specified in Table 5B. Fabricate members for industrial appearance using resorcinol glues. Submit shop drawings for all glued laminated members showing all dimensions and fabrication details, including an Erection Plan with proposed installation details.

SOLID SAWN MEMBERS: Furnish Solid Sawn Running Planks of Coastal Region Douglas Fir-Larch, Rough Sawn, No. 2 or better Grade, as specified in the WWPA or WCLIB grading rules.

TIMBER TREATMENT: After fabrication, incise and pressure treat all timber members in conformance with AWPA U1, Use Category as described below using pentachlorophenol, Type A Solvent (PCP-A) or copper naphthenate.

Deck Panels, Curbs, Running Plank: Use Category UC3B (above ground, exposed)
Backwalls: Use Category UC4B (Ground Contact, Heavy Duty)

Follow WWPI's "Best Management Practices for the Use of Treated Wood in Aquatic Environments."

FIELD TREATMENT: Treat any field drilled holes and field cut or damaged members with a 2% solution of copper naphthenate. Pour the field treatment into any field-drilled holes or nail holes prior to inserting the fasteners.

TIMBER INSPECTION AND CERTIFICATION: Contact USFS personnel at least five (5) days prior to shipping and make all timber members available for inspection. Furnish the following compliance certificates upon delivery:

A. Supplier certification, from a WWPA or WCLIB approved supplier, that all wood materials meet the requirements as to species and grade.
B. Certification of preservative, penetration in inches, and retention in pounds per cubic foot (Assay Method) by either a qualified testing and inspection agency or supplier certification. Supplier certification requires each solid piece to be stamped or branded with the ALSC quality mark.
C. Certification from a qualified inspection and testing agency indicating conformance of all glue laminated members with AITC 117-93.
D. Supplier certification that all treated wood materials were treated in conformance with and meet the requirements of WWPI's Best Management Practices for the Use of Treated Wood in Aquatic Environments

FOREST SERVICE U S DEPARTMENT OF AGRICULTURE

REGION ONE

BY	DATE	REVISION DESCRIPTION

DESIGN CT PROJ. NO. 6812
DRAWN ASG DATE Apr-18
CHECKED MJ SURVEYED DJ&A

DJ&A, P.C.
CONSULTING ENGINEERS & LAND SURVEYORS
3203 Russell Street, Missoula, Montana 59801-6591
Phone 406/721-4320 Fax 406/549-6371

NEZ PERCE-CLEARWATER NFs
MEADOW CREEK BRIDGE
FOREST ROAD 382 MP 4.0

ESTIMATED QUANTITIES & GENERAL NOTES

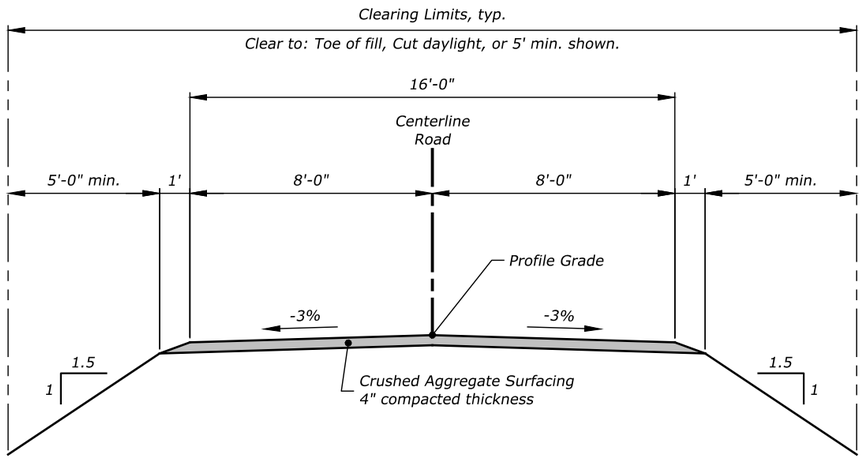

ROAD TYPICAL SECTION

Not to Scale

SURVEY CONTROL POINTS

CONTROL POINT TABLE				
POINT #	NORTHING	EASTING	ELEVATION	DESCRIPTION
CP-1	1954323.65	2386598.30	2812.03	SET-RPC
CP-2	1954256.38	2386701.76	2807.78	SET-RPC
CP-3	1954220.39	2386901.60	2806.37	SET-RPC

SET-RPC = Rebar with Red Plastic Cap set by DJ&A.
See Sheet 4 for location of Control Points.

ROAD CENTERLINE POINTS

CENTERLINE POINTS				
POINT #	NORTHING	EASTING	ELEVATION	DESCRIPTION
7000	1954187.0149	2386991.2402		STA 21+48.90 PC
7001	1954196.9847	2386961.7832	2806.11	STA 21+80
7002	1954207.8530	2386925.0683	2807.32	STA 22+18.29 PT
7003	1954208.3027	2386923.4212	2807.38	STA 22+20
7004	1954218.8380	2386884.8336	2809.24	STA 22+60
7005	1954229.3733	2386846.2459	2811.20	STA 23+00
7006	1954238.9078	2386811.3241	2812.06	STA 23+36.20
7007	1954256.2747	2386747.7144	2812.06	STA 24+02.14
7008	1954262.5464	2386724.7428	2811.58	STA 24+25.95 PC
7009	1954273.3574	2386692.4741	2810.40	STA 24+60
7010	1954290.6240	2386656.4256	2809.33	STA 25+00
7011	1954360.5411	2386572.7573		STA 26+09.64 PT

** Centerline Points are at Profile Grade at stations shown.*

ABUTMENT LAYOUT POINTS

LAYOUT POINTS				
POINT #	NORTHING	EASTING	ELEVATION	DESCRIPTION
8000	1954221.9300	2386814.3229	2805.20	BOTTOM OF FOOTING
8001	1954239.3385	2386809.7464	2805.20	BOTTOM OF FOOTING
8002	1954256.7470	2386805.1699	2805.20	BOTTOM OF FOOTING
8003	1954238.4354	2386753.8689	2805.20	BOTTOM OF FOOTING
8004	1954255.8438	2386749.2924	2805.20	BOTTOM OF FOOTING
8005	1954273.2523	2386744.7159	2805.20	BOTTOM OF FOOTING

** Abutment layout points are bottom of grade beam elevations.*
See Sheet 7 for location of Abutment Layout Points.

RIPRAP LAYOUT POINTS

LAYOUT POINTS				
POINT #	NORTHING	EASTING	ELEVATION	DESCRIPTION
8100	1954218.0004	2386799.3751	2800.60	RIPRAP LAYOUT
8101	1954252.8174	2386790.2221	2800.60	RIPRAP LAYOUT
8102	1954242.0913	2386767.7756	2801.30	RIPRAP LAYOUT
8103	1954276.9082	2386758.6226	2801.30	RIPRAP LAYOUT

See Sheet 8 for location of Riprap Layout Points.

FOREST SERVICE U S DEPARTMENT OF AGRICULTURE

REGION ONE

BY	DATE	REVISION DESCRIPTION

DESIGN CT PROJ. NO. 6812
DRAWN ASG DATE Apr-18
CHECKED MJ SURVEYED DJ&A

DJ&A, P.C.
CONSULTING ENGINEERS & LAND SURVEYORS
3203 Russell Street, Missoula, Montana 59801-8591
Phone 406/721-4320 Fax 406/549-6371

NEZ PERCE-CLEARWATER NFs
MEADOW CREEK BRIDGE
FOREST ROAD 382 MP 4.0

ROAD TYPICAL SECTION & POINT TABLES

LEGEND

EXISTING FEATURES

- *Existing Edge of Road*
- *Existing Bridge*
- *Existing Ditch*
- *Existing Edge of Water*
- *Major Contour (5')*
- *Minor Contour (1')*

ROAD CONSTRUCTION NOTES:

1. *Quantities shown are in-place, calculated to subgrade and not adjusted for shrink/swell.*
2. *Construct road embankment in accordance with FP-14 Section 204.*
3. *Use imported Unclassified Borrow (Item 20411) to construct road embankment.*
4. *Haul & dispose unsuitable material to the waste site designated in FSSS Section 105.*

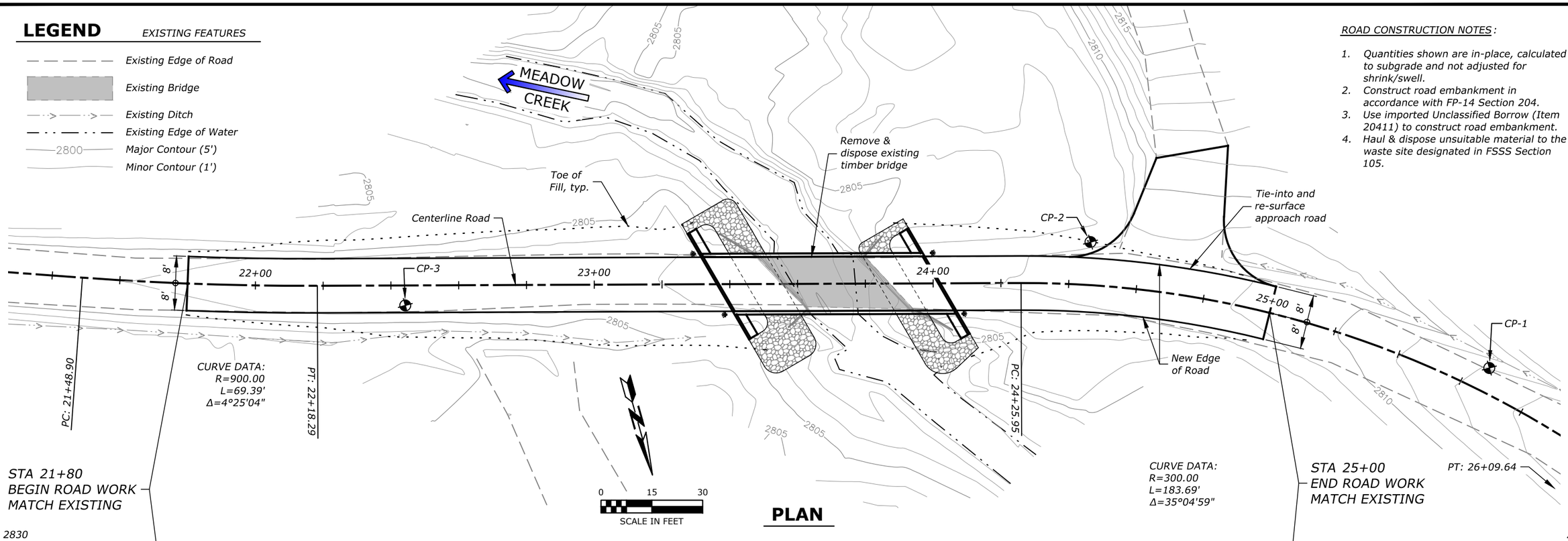

PLAN

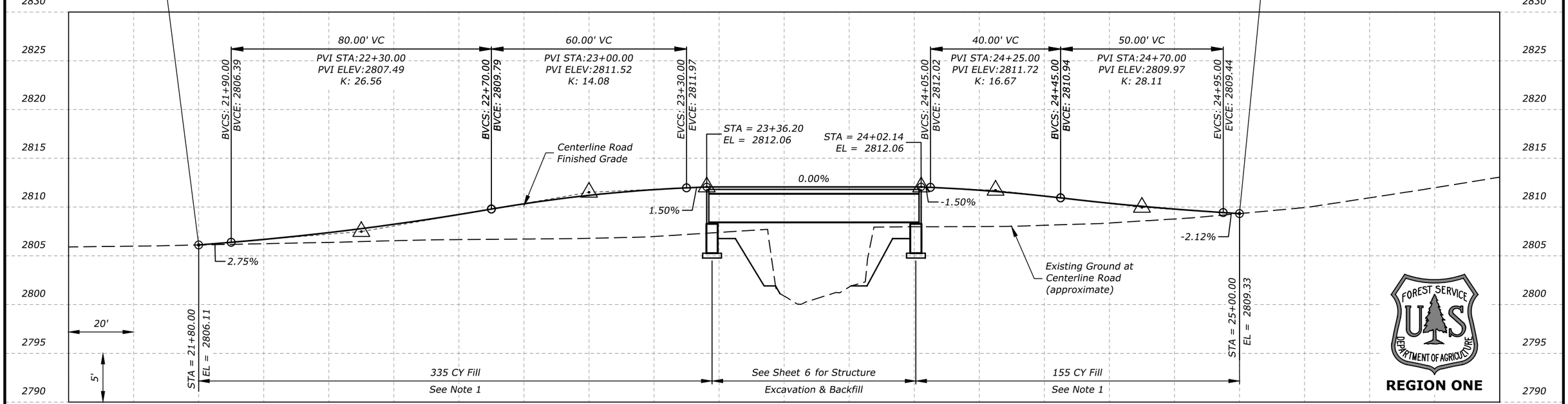

PROFILE

FOREST SERVICE U S DEPARTMENT OF AGRICULTURE

REGION ONE

BY	DATE	REVISION DESCRIPTION

DESIGN	CT	PROJ. NO.	6812
DRAWN	ASG	DATE	Apr-18
CHECKED	MJ	SURVEYED	DJ&A

DJ&A, P.C.
CONSULTING ENGINEERS & LAND SURVEYORS
3203 Russell Street, Missoula, Montana 59801-8591
Phone 406/721-4320 Fax 406/549-6371

NEZ PERCE-CLEARWATER NFs
MEADOW CREEK BRIDGE
FOREST ROAD 382 MP 4.0

ROAD PLAN & PROFILE

SHEET 4 OF 17

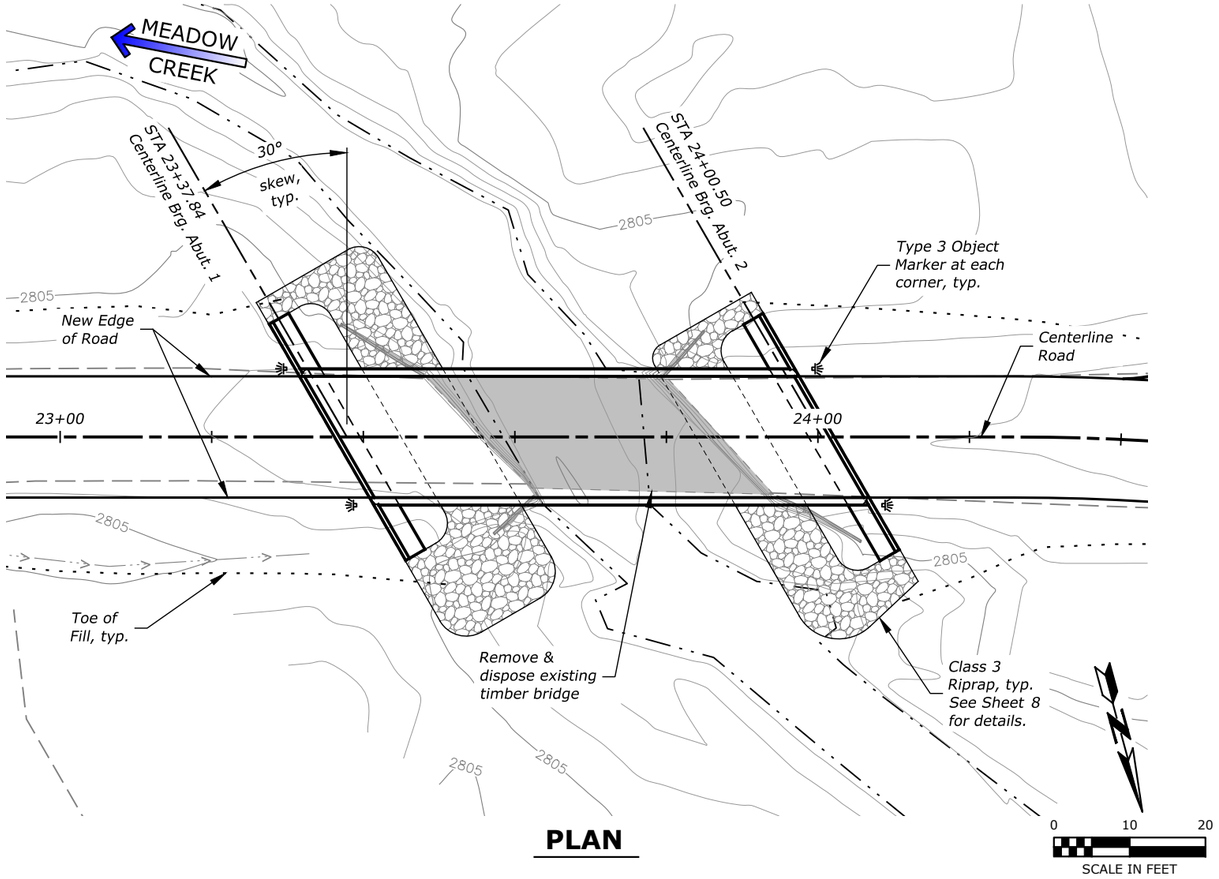

PLAN

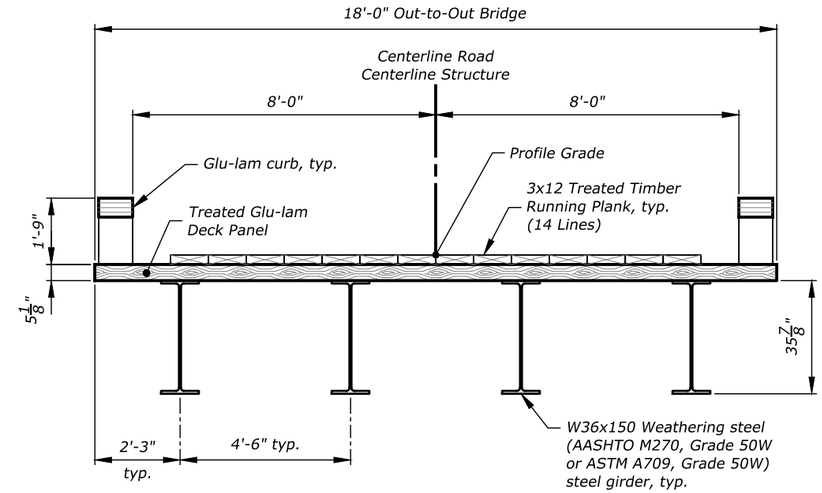

TYPICAL SECTION

Scale: 1/4" = 1'-0"

NOTE: Fabricator may submit an alternate girder size for approval. The alternate girder must have a section modulus equal to or greater than the girder shown. The contractor is responsible for all adjustments to the dimensions and elevations shown in these plans necessary to accommodate the alternate girder section.

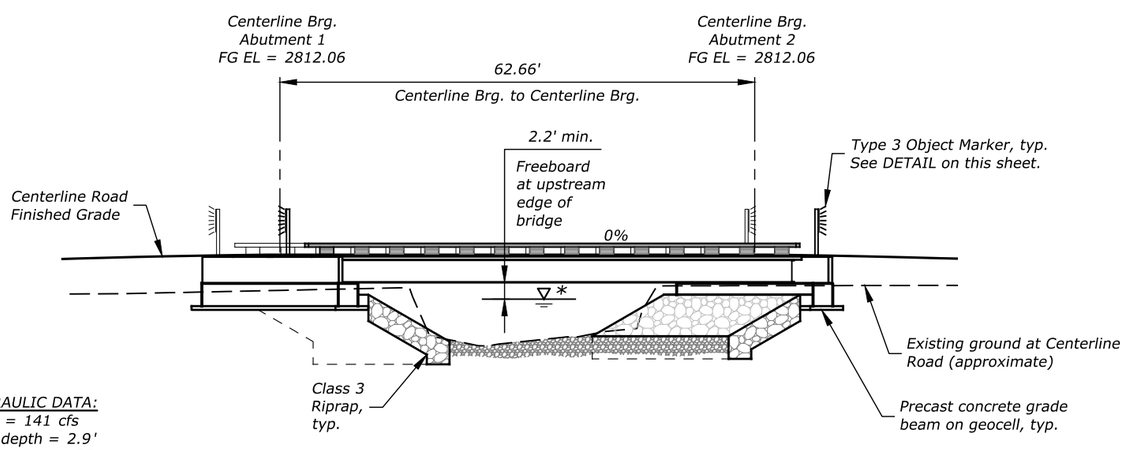

HYDRAULIC DATA:
Q2 = 141 cfs
Avg. depth = 2.9'
Bankfull width = 25'±

Q100 = 584 cfs
Avg. depth = 5.8'

* Q100= 2806.2 at upstream edge of bridge

ELEVATION

Scale: 1" = 20'

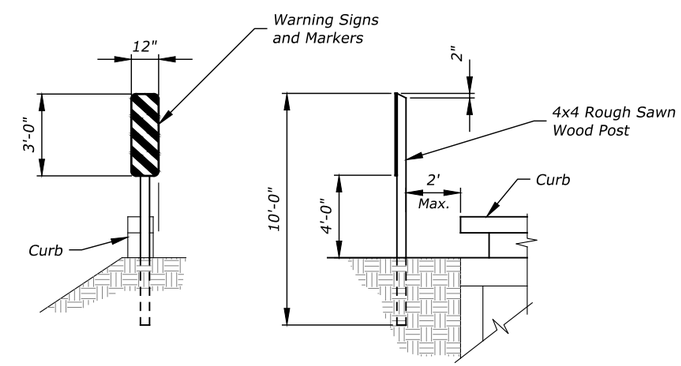

OBJECT MARKERS: Use 12"x 36" Type 3 object markers colored yellow and black. Use material meeting MUTCD OM-3L or OM-3R specifications. Fasten to post w/ (2) 1/4" Ø machine bolts w/ washers. Field drill bolt holes. Install posts such that the inside edge of the reflectorized panel is on line with the inside edge of the curb.

OBJECT MARKER TYPE 3

Not to Scale

FOREST SERVICE U S DEPARTMENT OF AGRICULTURE

REGION ONE

BY	DATE	REVISION DESCRIPTION

DESIGN CT PROJ. NO. 6812
DRAWN ASG DATE Apr-18
CHECKED MJ SURVEYED DJ&A

DJ&A, P.C.
CONSULTING ENGINEERS & LAND SURVEYORS
3203 Russell Street, Missoula, Montana 59801-8591
Phone 406/721-4320 Fax 406/549-6371

NEZ PERCE-CLEARWATER NFs
MEADOW CREEK BRIDGE
FOREST ROAD 382 MP 4.0

BRIDGE GENERAL LAYOUT

SHEET 5 OF 17

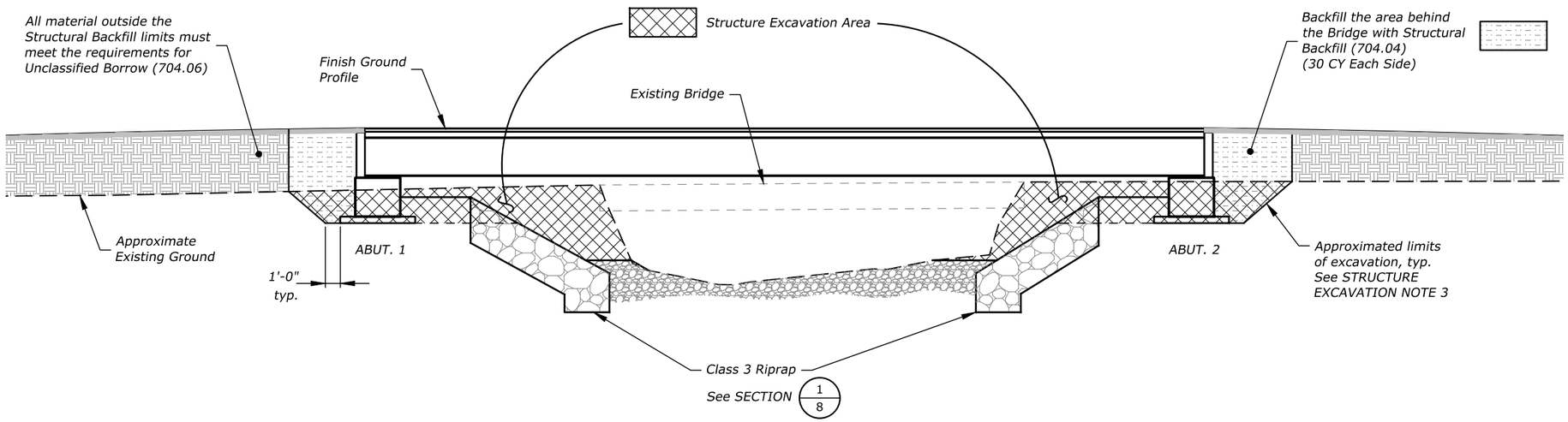

See Sheet 17 for DEWATERING requirements.

STRUCTURE EXCAVATION

LOOKING UPSTREAM

Not to Scale

STRUCTURE EXCAVATION NOTES:

1. Complete Structure Excavation in accordance with FP-14 Section 208.
2. The Contractor is solely responsible for excavation support and compliance with all applicable OSHA regulations.
3. Excavation limits shown are approximate based on OSHA sloping and benching requirements and an assumed soil type from limited surface observations at the site. Actual conditions may vary. The Contractor is responsible for making adjustments to the cut slopes and excavation quantities based on the actual soil types encountered. Notify the CO immediately if bedrock or soft, unsuitable soils are found.
4. Submit an Excavation Plan for approval that includes, as a minimum, the following: drawings and a written outline illustrating and describing the proposed excavation limits, methods, equipment to be used, location of stockpiles, and estimated quantities. The Excavation Plan must comply with all applicable OSHA requirements. Changes to the excavation limits shown here for the Contractor's dewatering methods or Contractor convenience must be shown on the Plan and are the responsibility of the Contractor. The Excavation Plan is incidental to the work.

BACKFILL NOTES:

1. Place Structural Backfill meeting FP-14 Subsection 704.04 at the ends of the bridge in accordance with Subsection 208.10 and compact in accordance with Subsection 208.10.
2. The Structural Backfill limits shown here are the minimum requirements.
3. It is assumed that material from Structure Excavation at this site will not be suitable for re-use. Remove and haul all unsuitable material to the designated waste site.
4. Any material outside the limits shown for Structural Backfill must meet the requirements of Subsection 704.06, Unclassified Borrow.

FOREST SERVICE U S DEPARTMENT OF AGRICULTURE

REGION ONE

BY	DATE	REVISION DESCRIPTION

DESIGN CT PROJ. NO. 6812
DRAWN ASG DATE Apr-18
CHECKED MJ SURVEYED DJ&A

DJ&A, P.C.
CONSULTING ENGINEERS & LAND SURVEYORS
3203 Russell Street, Missoula, Montana 59801-8591
Phone 406/721-4320 Fax 406/549-6371

NEZ PERCE-CLEARWATER NFs
MEADOW CREEK BRIDGE
FOREST ROAD 382 MP 4.0

STRUCTURE EXCAVATION & BACKFILL

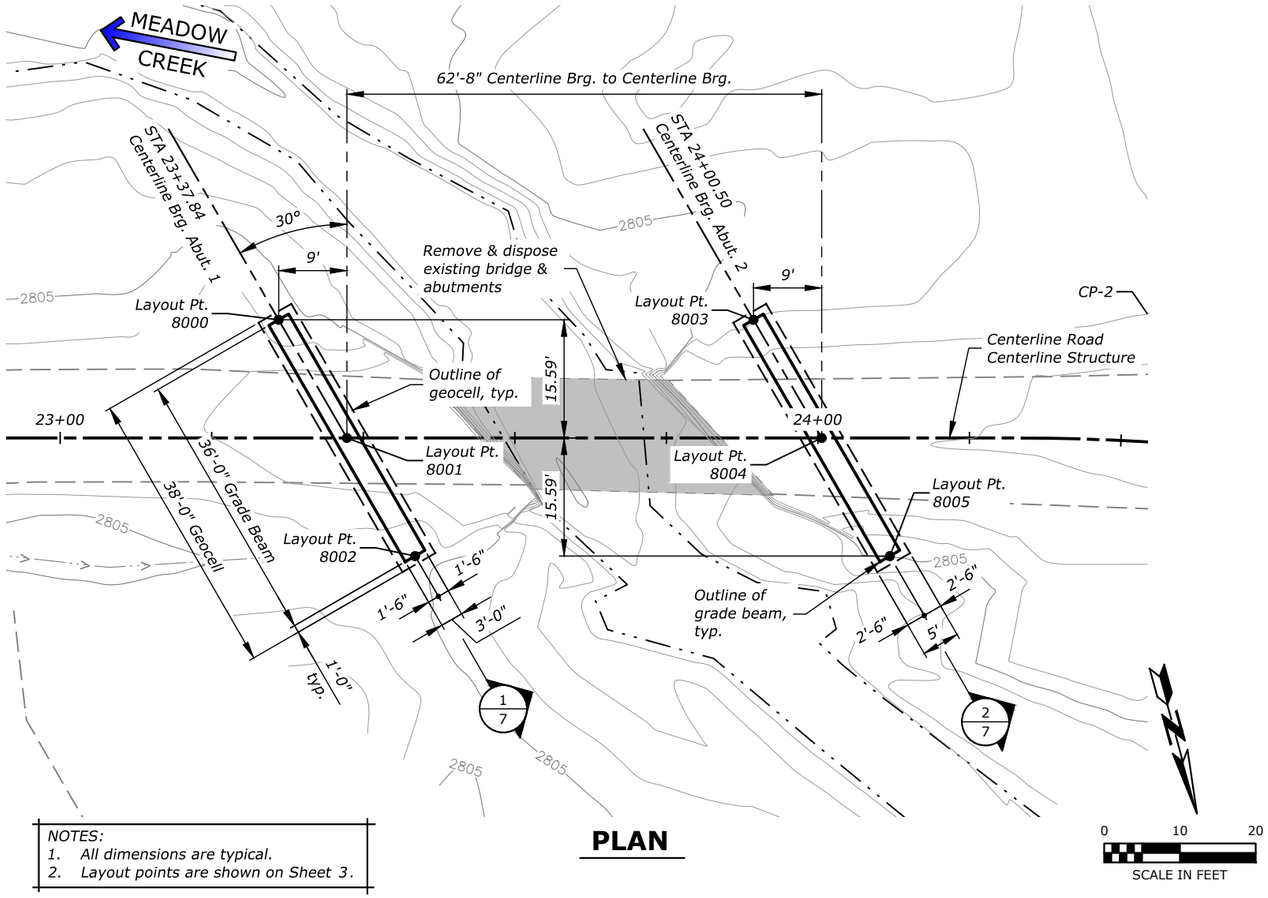

NOTES:
1. All dimensions are typical.
2. Layout points are shown on Sheet 3.

PLAN

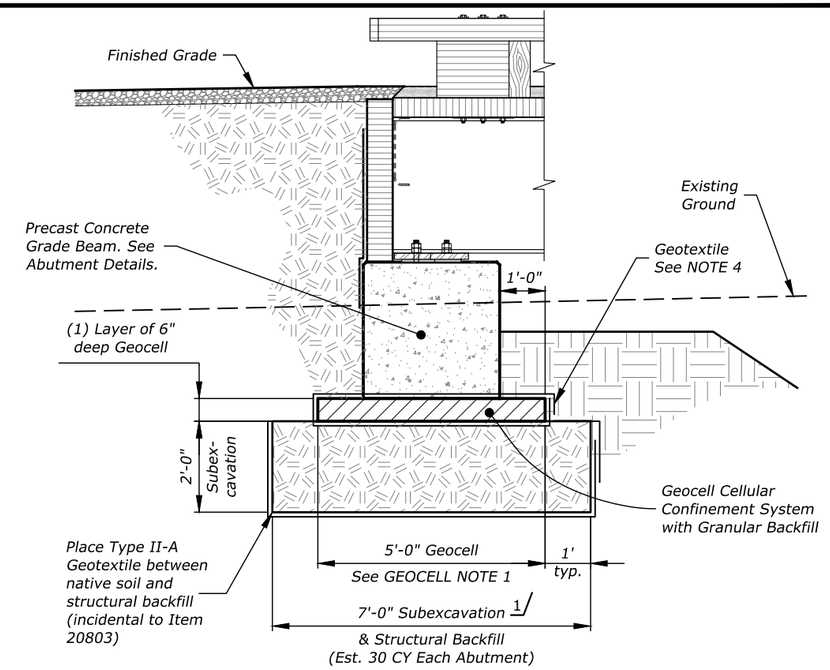

GEOCELL

Not to Scale — ABUTMENT 1 SHOWN — ABUTMENT 2 SIMILAR

GEOCELL NOTES:

1. Place Geocell on undisturbed subgrade or compacted structural backfill.
2. Install Geocell in accordance with Forest Service Supplemental Specifications (FSSS) 272.06, holding lines and grades in place with suitable side forms (i.e. "stretcher frames" or steel stakes) to ensure cells are expanded to the minimum dimension required by the manufacturer.
3. Backfill Geocell with coarse granular backfill per FSSS Subsection 703.03(c).
4. Place Class 1, Type A Separation Geotextile under Geocell and wrap over top after backfilling (incidental to Item 27201).
5. Extend Geocell 1' minimum beyond limits of grade beam on all sides.

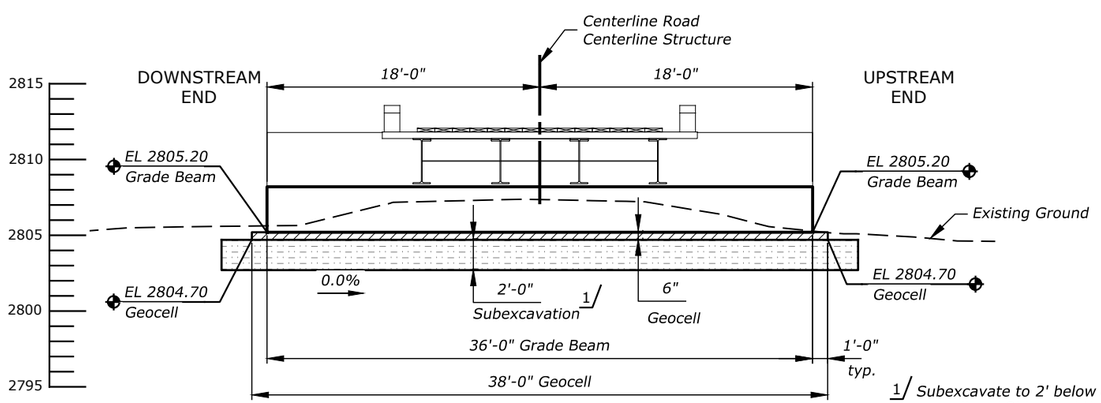

1/ Subexcavate to 2' below bottom of geocell and 2' beyond the edges of geocell. Backfill with Structural Backfill, Item 20803. Subexcavation may not be required if bridge removal does not disturb subgrade soil below abutment.

1/7 SECTION

ABUTMENT 1

Scale: 1" = 10'

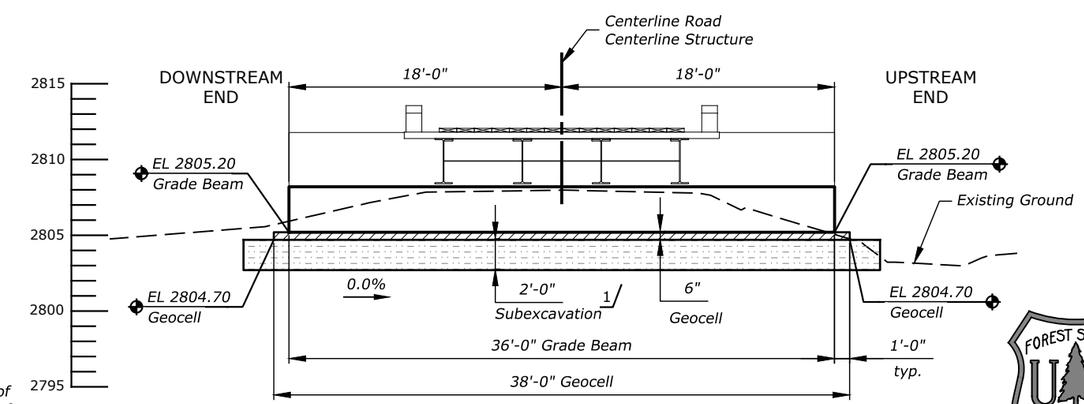

2/7 SECTION

ABUTMENT 2

Scale: 1" = 10'

REGION ONE

BY	DATE	REVISION DESCRIPTION

DESIGN CT — PROJ. NO. 6812
DRAWN ASG — DATE Apr-18
CHECKED MJ — SURVEYED DJ&A

DJ&A, P.C.
CONSULTING ENGINEERS & LAND SURVEYORS
3203 Russell Street, Missoula, Montana 59801-8591
Phone 406/721-4320 Fax 406/549-6371

NEZ PERCE-CLEARWATER NFs
MEADOW CREEK BRIDGE
FOREST ROAD 382 MP 4.0

FOUNDATION PLAN

SHEET 7 OF 17

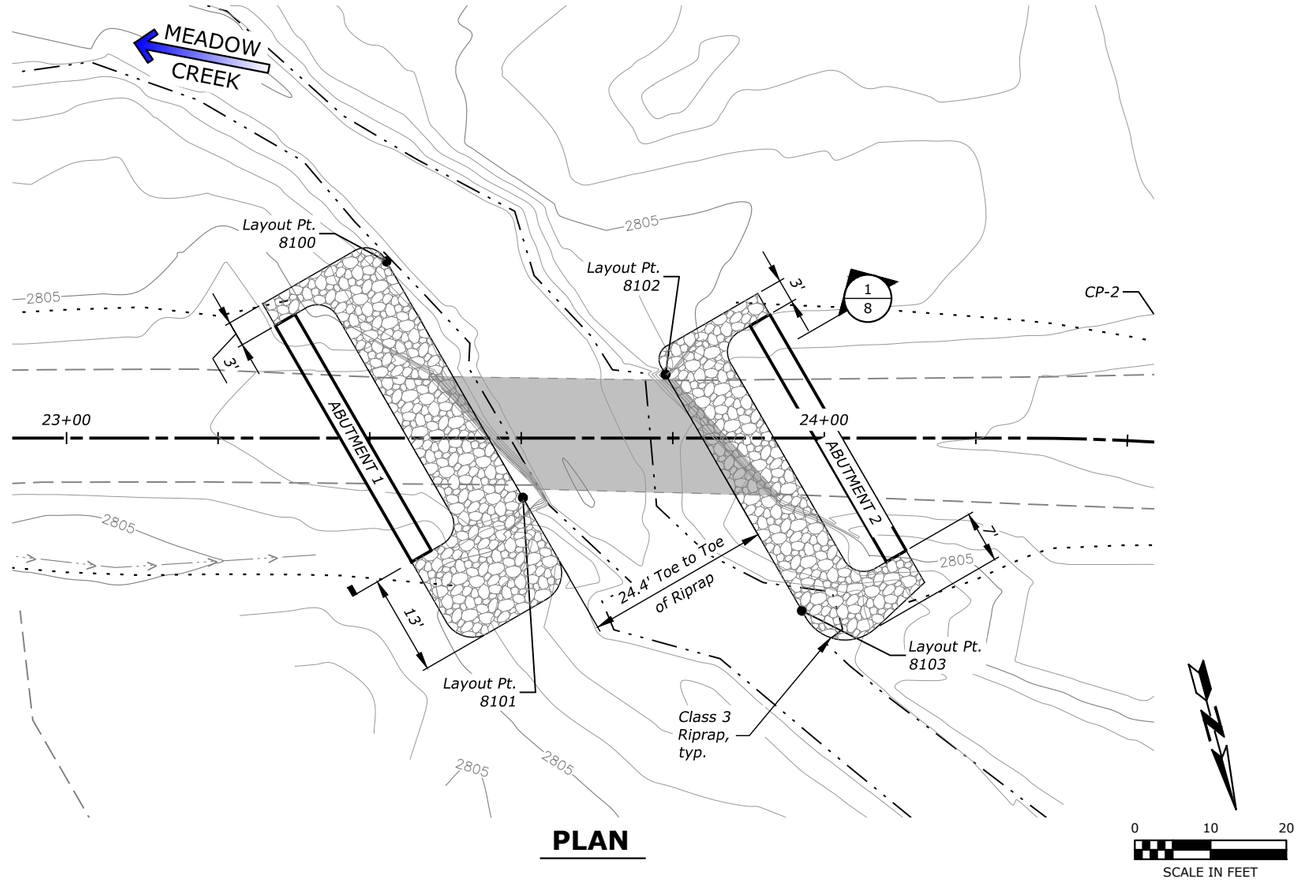

PLAN

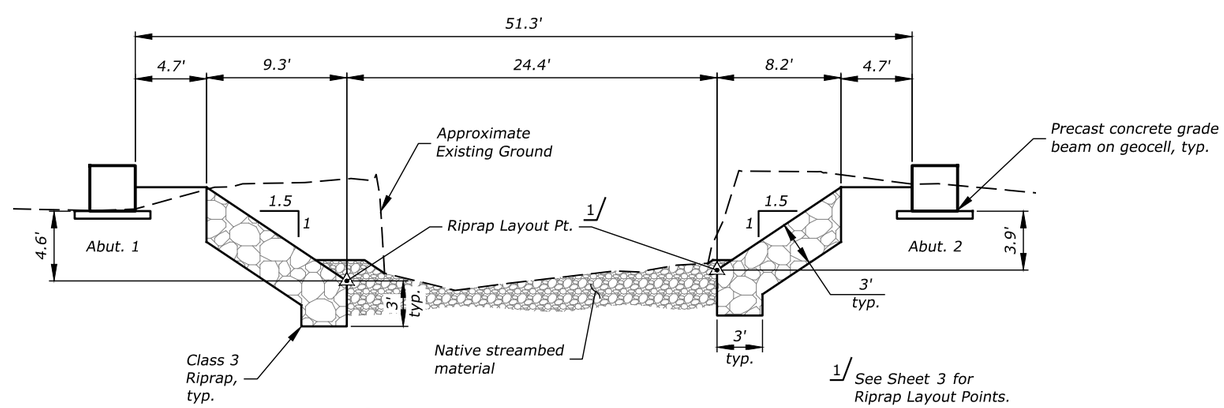

1/8 **SECTION** *RIPRAP*

Scale: 1" = 10'

REGION ONE

BY	DATE	REVISION DESCRIPTION

DESIGN CT PROJ. NO. 6812
DRAWN ASG DATE Apr-18
CHECKED MJ SURVEYED DJ&A

DJ&A, P.C.
CONSULTING ENGINEERS & LAND SURVEYORS
3203 Russell Street, Missoula, Montana 59801-8591
Phone 406/721-4320 Fax 406/549-6371

NEZ PERCE-CLEARWATER NFs
MEADOW CREEK BRIDGE
FOREST ROAD 382 MP 4.0

RIPRAP DETAILS

SHEET 8 OF 17

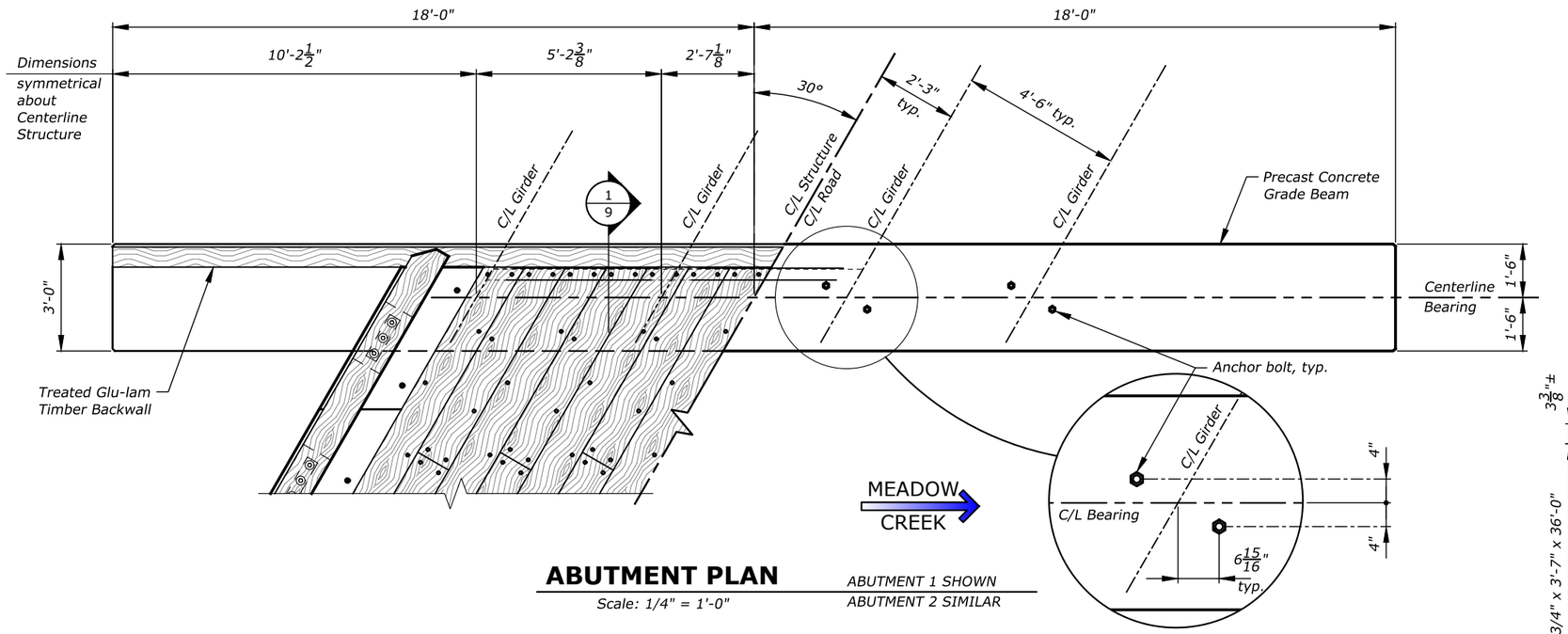

ABUTMENT PLAN

Scale: 1/4" = 1'-0"

ABUTMENT 1 SHOWN
ABUTMENT 2 SIMILAR

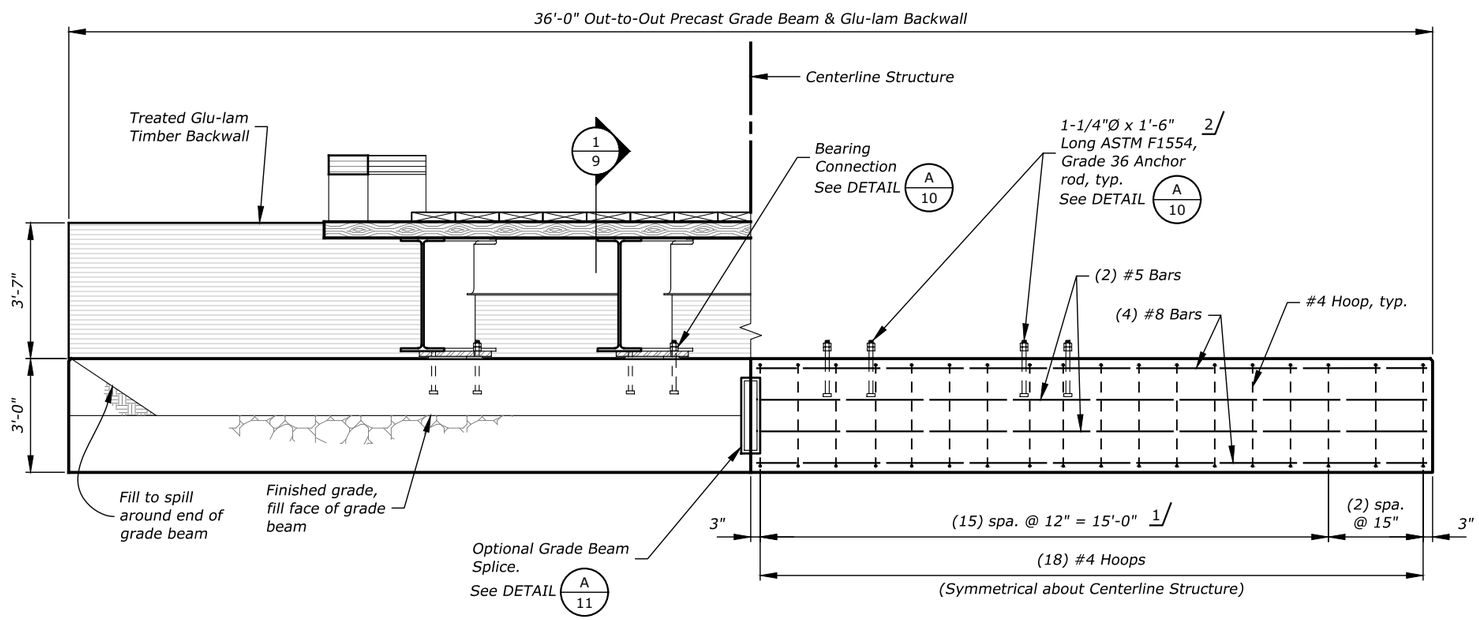

ABUTMENT ELEVATION

Scale: 1/4" = 1'-0"

LOOKING BACK ON-LINE
ABUTMENT 1 SHOWN, ABUTMENT 2 SIMILAR

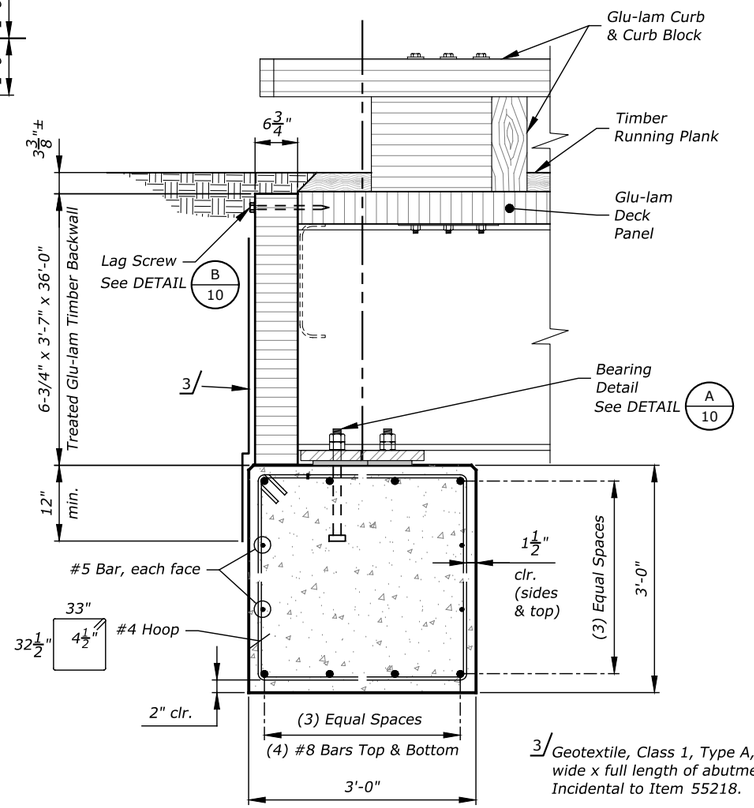

3/ Geotextile, Class 1, Type A, 4' wide x full length of abutment. Incidental to Item 55218.

1/9 **SECTION**

Scale: 1/2" = 1'-0"

ABUTMENT 1 Shown
ABUTMENT 2 Similar

1/ Adjust hoop spacing where necessary to avoid conflict with embedded anchor bolts.

2/ Contractor may drill into grade beam and secure anchor bolts with an approved epoxy system.

FOREST SERVICE U S DEPARTMENT OF AGRICULTURE

REGION ONE

BY	DATE	REVISION DESCRIPTION

DESIGN CT PROJ. NO. 6812
DRAWN ASG DATE Apr-18
CHECKED MJ SURVEYED DJ&A

DJ&A, P.C.
CONSULTING ENGINEERS & LAND SURVEYORS
3203 Russell Street, Missoula, Montana 59801-8591
Phone 406/721-4320 Fax 406/549-6371

NEZ PERCE-CLEARWATER NFs
MEADOW CREEK BRIDGE
FOREST ROAD 382 MP 4.0

ABUTMENT PLAN & ELEVATION

SHEET 9 OF 17

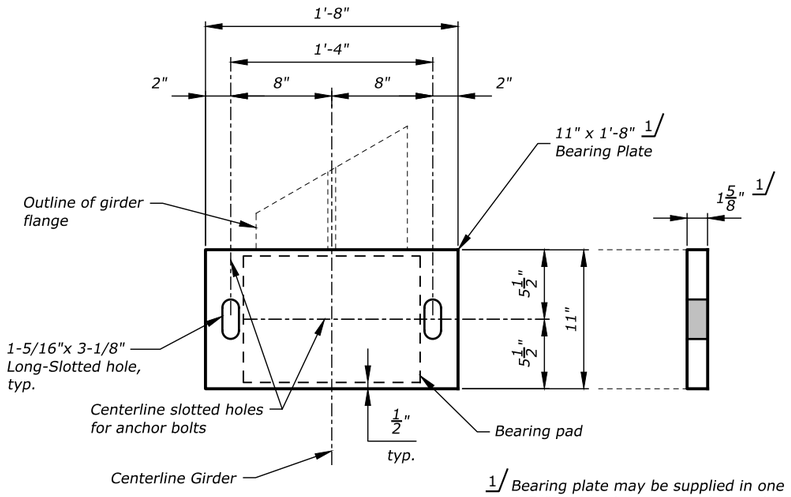

1/ Bearing plate may be supplied in one 1-5/8" thick piece or two pieces with a total thickness of 1-5/8".

PLAN (plate)

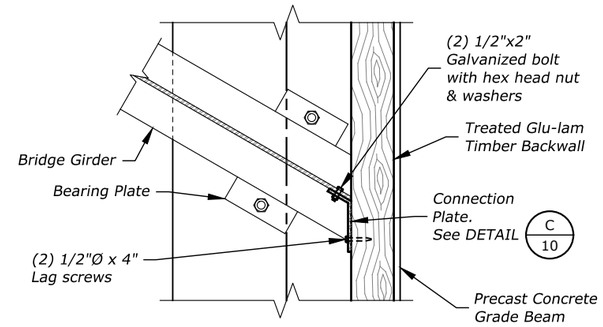

PLAN

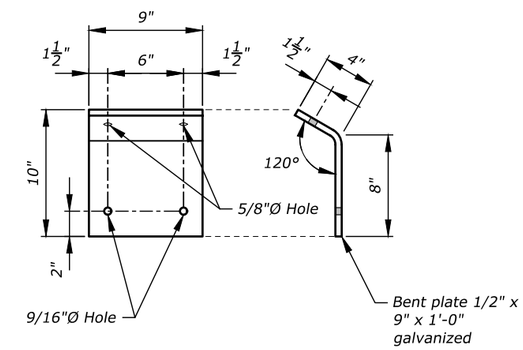

C/10 **DETAIL** *CONNECTION PLATE*

Scale: 1" = 1'-0" *4 EACH ABUTMENT*

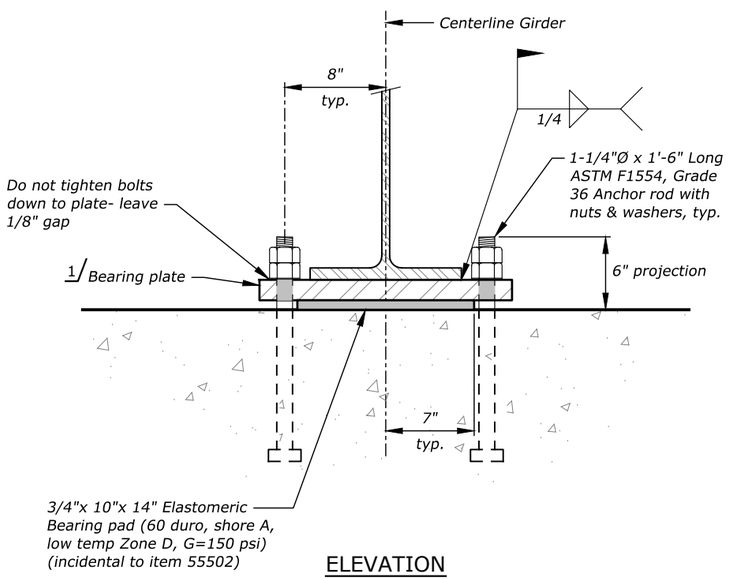

ELEVATION

A/10 **DETAIL** *BEARING CONNECTION*

Scale: 1" = 1'-0"

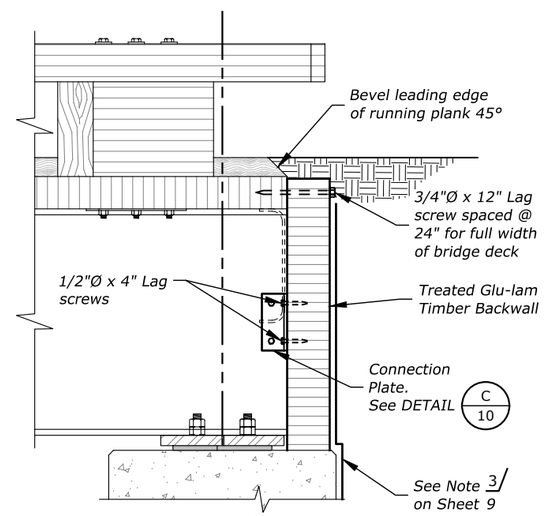

ELEVATION

B/10 **DETAIL** *BACKWALL CONNECTION*

Scale: 1/2" = 1'-0"

REGION ONE

BY	DATE	REVISION DESCRIPTION

DESIGN CT PROJ. NO. 6812
DRAWN ASG DATE Apr-18
CHECKED MJ SURVEYED DJ&A

DJ&A, P.C.
CONSULTING ENGINEERS & LAND SURVEYORS
3203 Russell Street, Missoula, Montana 59801-8591
Phone 406/721-4320 Fax 406/549-6371

NEZ PERCE-CLEARWATER NFs
MEADOW CREEK BRIDGE
FOREST ROAD 382 MP 4.0

ABUTMENT DETAILS

SHEET 10 OF 17

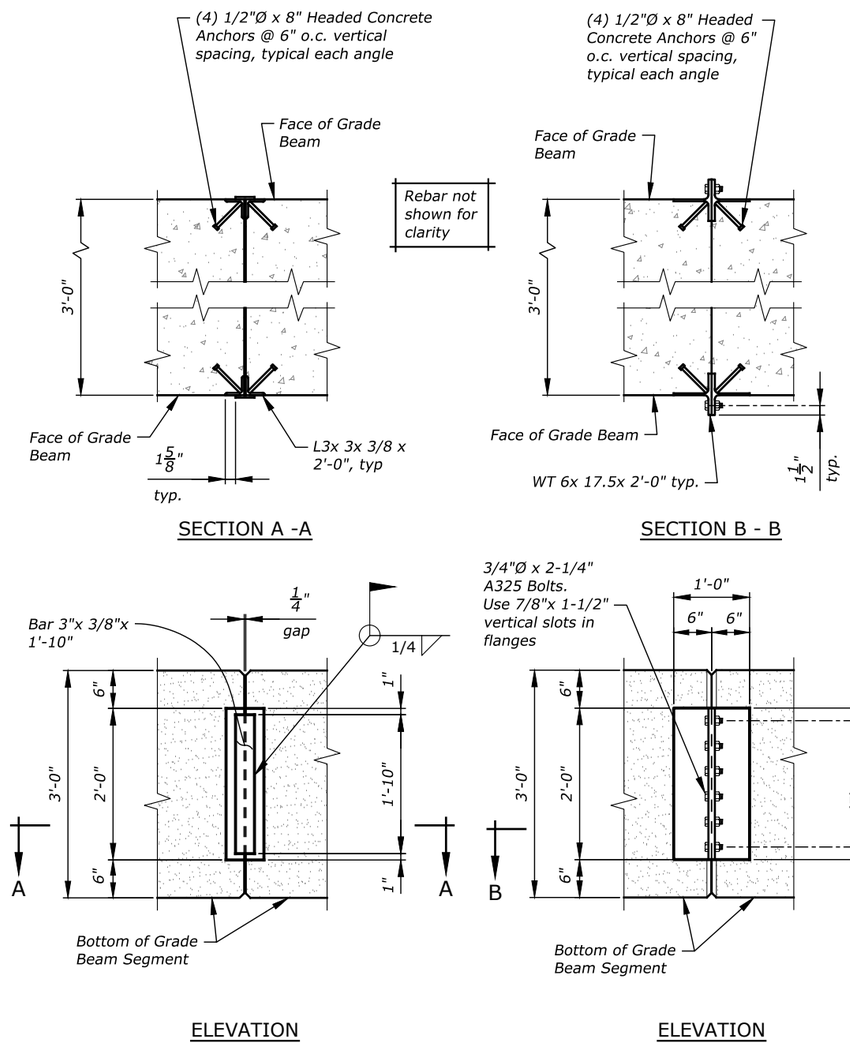

FIELD WELD ALTERNATE

FIELD BOLT ALTERNATE

POST-INSTALLED ANCHOR ALTERNATIVE

A/11 **DETAIL** *OPTIONAL GRADE BEAM SPLICE*

Scale: 1/2" = 1'-0"

REGION ONE

BY	DATE	REVISION DESCRIPTION

DESIGN CT PROJ. NO. 6812
DRAWN ASG DATE Apr-18
CHECKED MJ SURVEYED DJ&A

DJ&A, P.C.
CONSULTING ENGINEERS & LAND SURVEYORS
3203 Russell Street, Missoula, Montana 59801-8591
Phone 406/721-4320 Fax 406/549-6371

NEZ PERCE-CLEARWATER NFs
MEADOW CREEK BRIDGE
FOREST ROAD 382 MP 4.0

ABUTMENT DETAILS

SHEET 11 OF 17

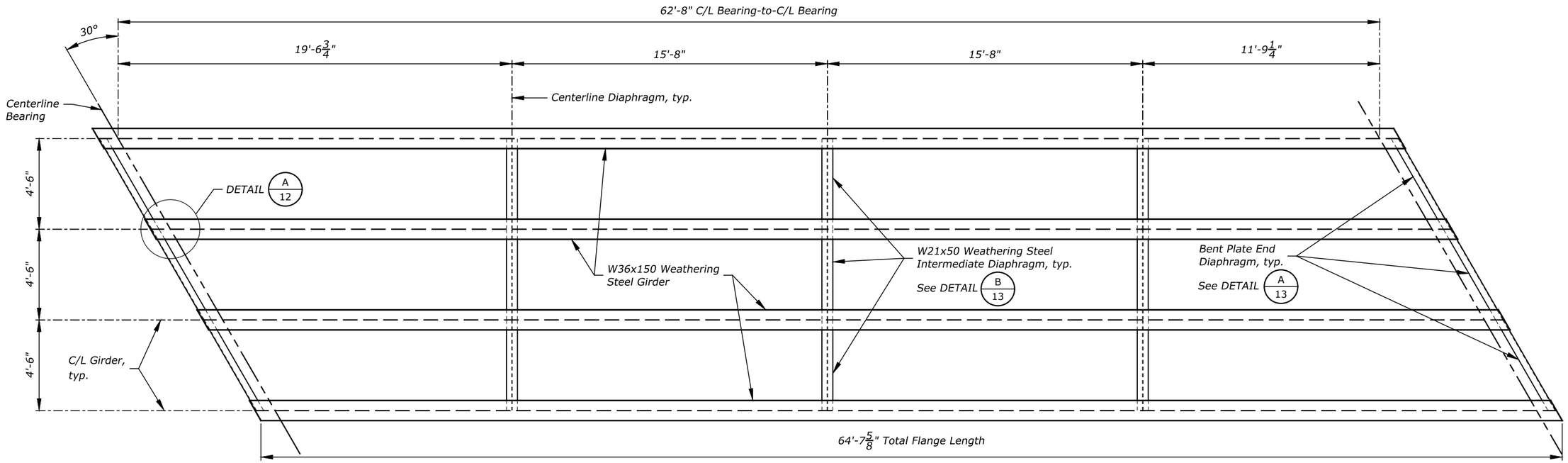

FRAMING PLAN

Scale: 3/16" = 1'-0"

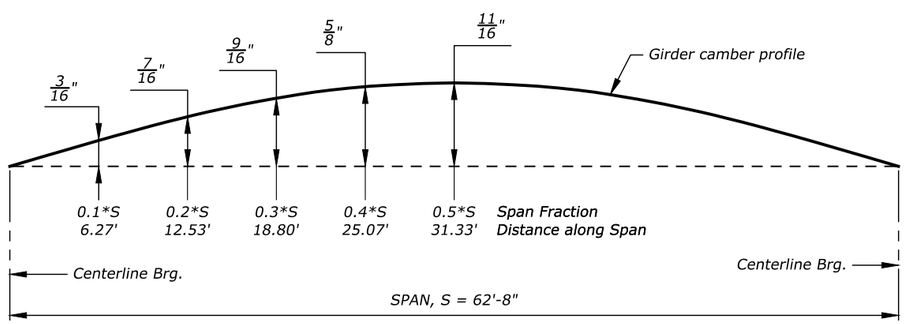

GIRDER CAMBER DIAGRAM

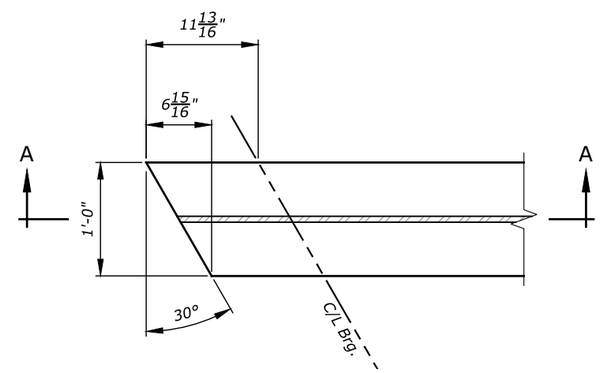

PLAN

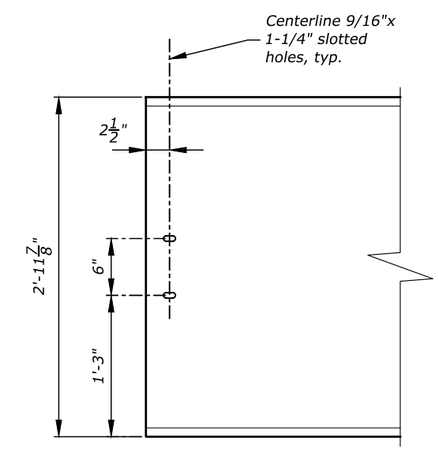

SECTION A-A

GIRDER NOTES:

1. *After the girders are assembled and erected, verify the camber with a surveyor's level at the 1/10th points along the span. Notify the CO if differential camber between girders exceeds 1/4" at any point. Do not set deck panels until any differential camber issues have been resolved to the CO's satisfaction. The contractor is responsible to make field adjustments to account for any differential camber of the girders to ensure all deck panels are in full contact with all four girders.*
2. *See Sections 153 & 555 of the Standard Specifications and Supplemental Specifications (FSSS) for steel girder submittal requirements.*
3. *Make beam camber 1.5x the dead load deflection.*

A/12 **DETAIL** *GIRDER END*

Scale: 3/4" = 1'-0"

REGION ONE

BY	DATE	REVISION DESCRIPTION

DESIGN CT PROJ. NO. 6812
DRAWN ASG DATE Apr-18
CHECKED MJ SURVEYED DJ&A

DJ&A, P.C.
CONSULTING ENGINEERS & LAND SURVEYORS
3203 Russell Street, Missoula, Montana 59801-8591
Phone 406/721-4320 Fax 406/549-6371

NEZ PERCE-CLEARWATER NFs
MEADOW CREEK BRIDGE
FOREST ROAD 382 MP 4.0

GIRDER FRAMING PLAN

SHEET 12 OF 17

Alternate diaphragm details may be submitted for approval. Intermediate diaphragms may include connection plates and top of diaphragm can be no farther than 3" from bottom of deck as shown.

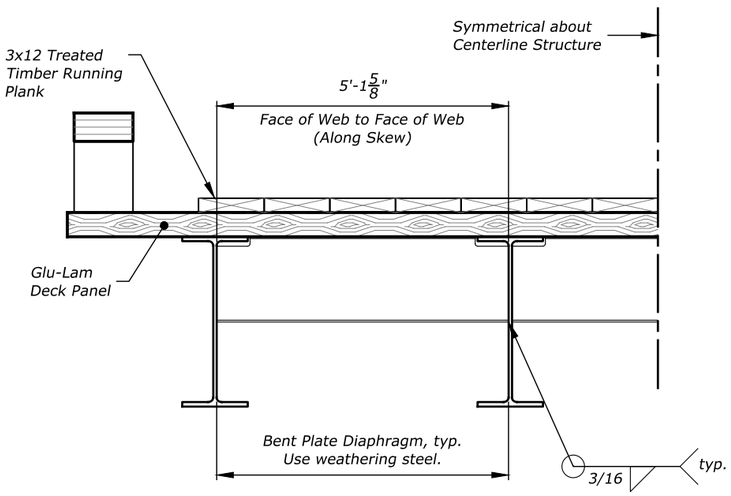

A 13 **DETAIL** *END DIAPHRAGM*

Scale: 3/8" = 1'-0"

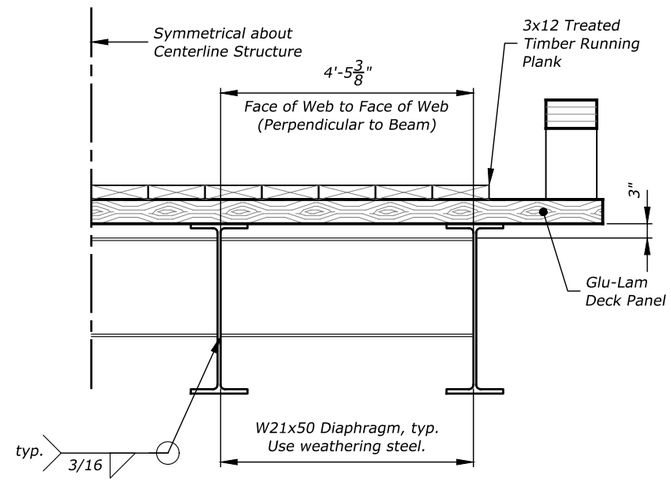

B 13 **DETAIL** *iNTERMEDIATE DIAPHRAGM*

Scale: 3/8" = 1'-0"

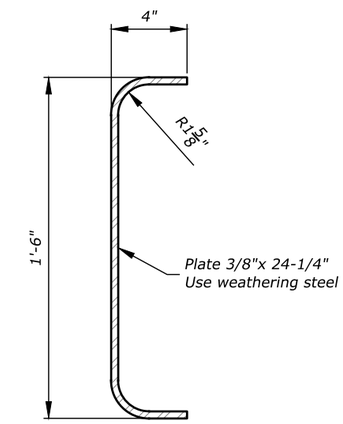

C 13 **DETAIL** *BENT PLATE DIAPHRAGM*

Not to Scale

REGION ONE

BY	DATE	REVISION DESCRIPTION

DESIGN CT PROJ. NO. 6812
DRAWN ASG DATE Apr-18
CHECKED MJ SURVEYED DJ&A

DJ&A, P.C.
CONSULTING ENGINEERS & LAND SURVEYORS
3203 Russell Street, Missoula, Montana 59801-8591
Phone 406/721-4320 Fax 406/549-6371

NEZ PERCE-CLEARWATER NFs
MEADOW CREEK BRIDGE
FOREST ROAD 382 MP 4.0

SUPERSTRUCTURE DETAILS

SHEET 13 OF 17

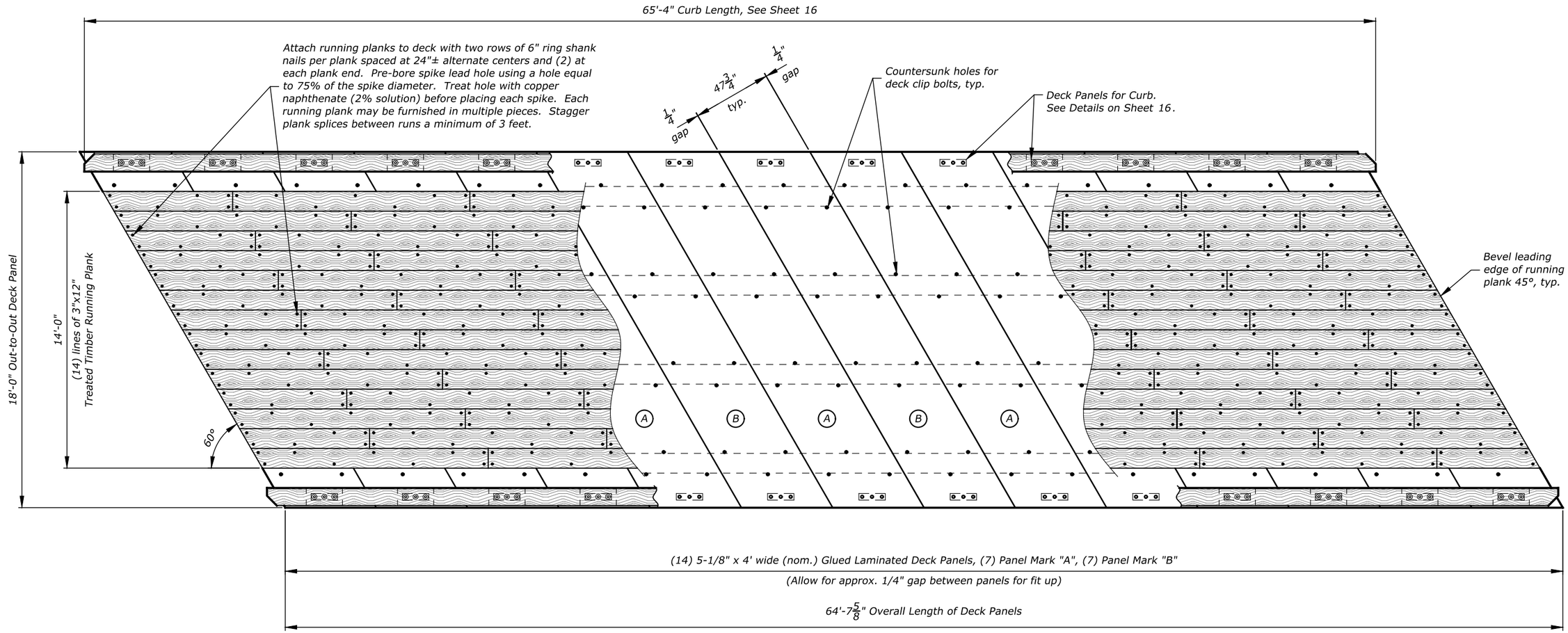

DECK PANEL PLAN

Scale: 3/16" = 1'-0"

(A) Glu-lam panel fabrication mark. See PANEL DETAILS on Sheet 15.

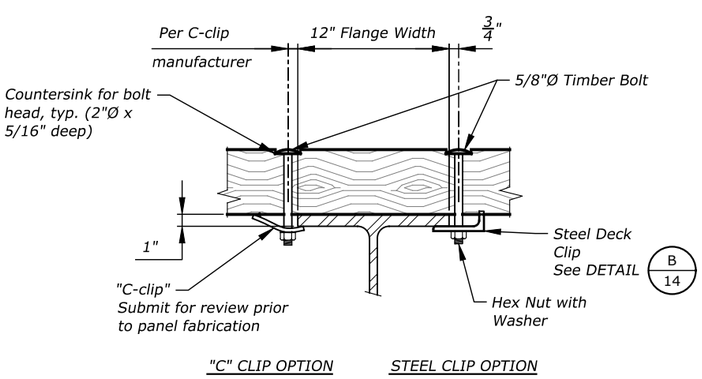

A/14 **DETAIL** DECK CONNECTION
Scale: 1" = 1'-0"

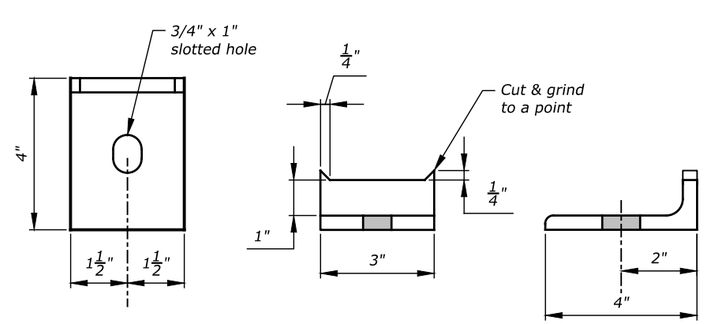

B/14 **DETAIL** STEEL DECK CLIP
Not to Scale
Fabricate from L 4x3x3/8

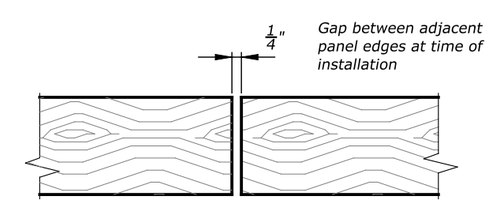

C/14 **DETAIL** DECK PANEL INSTALLATION
Not to Scale

FOREST SERVICE U S DEPARTMENT OF AGRICULTURE
REGION ONE

BY	DATE	REVISION DESCRIPTION

DESIGN CT PROJ. NO. 6812
DRAWN ASG DATE Apr-18
CHECKED MJ SURVEYED DJ&A

DJ&A, P.C.
CONSULTING ENGINEERS & LAND SURVEYORS
3203 Russell Street, Missoula, Montana 59801-8591
Phone 406/721-4320 Fax 406/549-6371

NEZ PERCE-CLEARWATER NFs
MEADOW CREEK BRIDGE
FOREST ROAD 382 MP 4.0

DECK PANEL PLAN

SHEET 14 OF 17

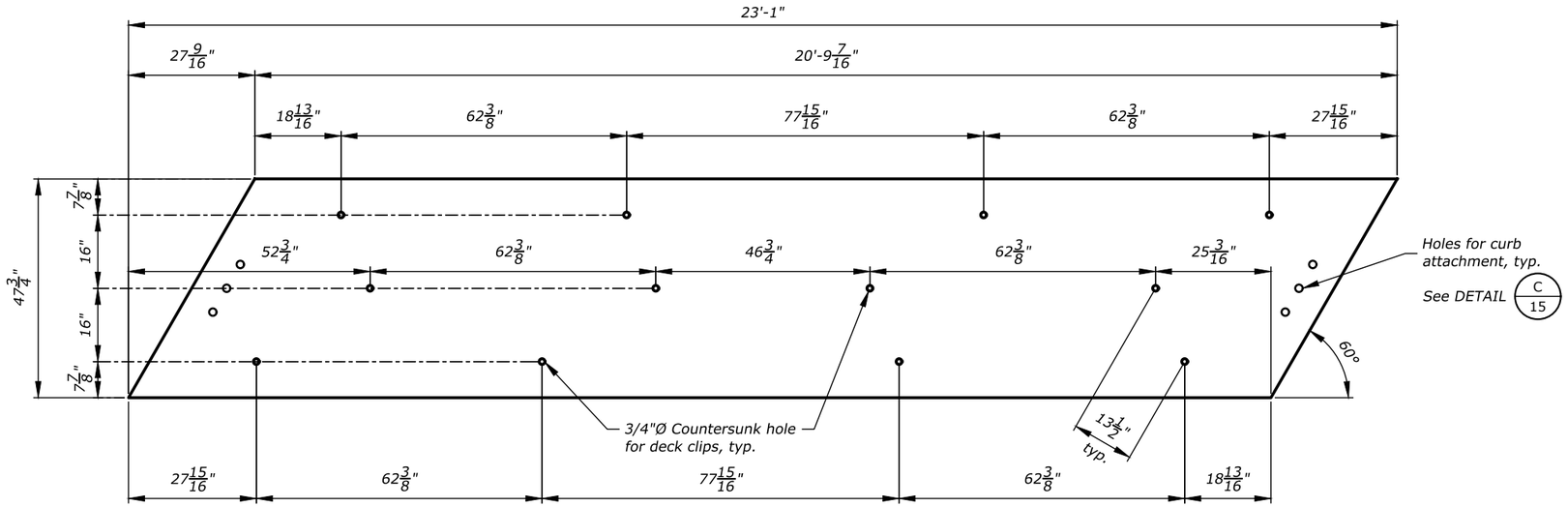

PANEL MARK "A"

7 Pieces

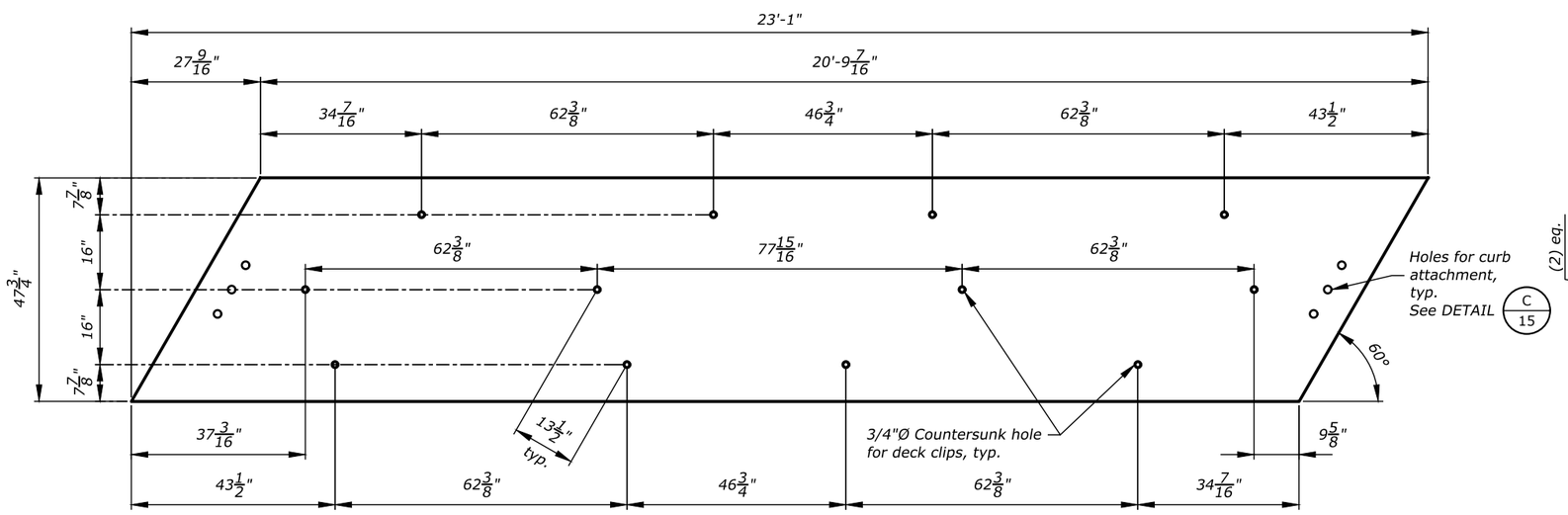

PANEL MARK "B"

7 Pieces

A 15 **DETAIL** *DECK PANELS*

Scale: 3/8" = 1'-0"

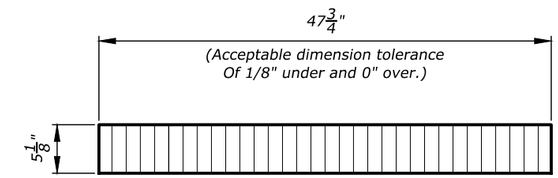

B 15 **DETAIL** *TYPICAL DECK PANEL*

Scale: 3/8" = 1'-0"

NOTE: HOLES IN DECK PANEL FOR CURB CONNECTION MAY BE FIELD DRILLED. SEE GENERAL NOTES ON SHEET 2 FOR TREATMENT OF FIELD-DRILLED HOLES.

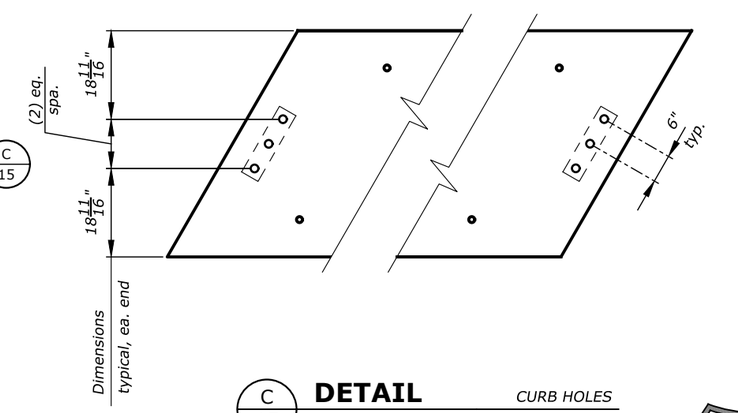

C 15 **DETAIL** *CURB HOLES*

Scale: 3/8" = 1'-0"

REGION ONE

BY	DATE	REVISION DESCRIPTION

DESIGN CT PROJ. NO. 6812
DRAWN ASG DATE Apr-18
CHECKED MJ SURVEYED DJ&A

DJ&A, P.C.
CONSULTING ENGINEERS & LAND SURVEYORS
3203 Russell Street, Missoula, Montana 59801-8591
Phone 406/721-4320 Fax 406/549-6371

NEZ PERCE-CLEARWATER NFs
MEADOW CREEK BRIDGE
FOREST ROAD 382 MP 4.0

DECK PANEL DETAILS

SHEET 15 OF 17

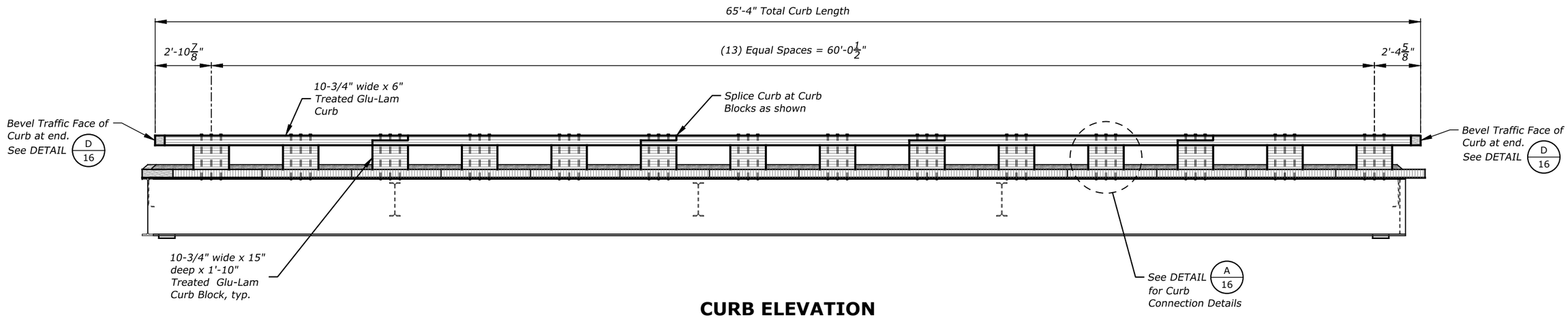

CURB ELEVATION

Scale: 3/16" = 1'-0"

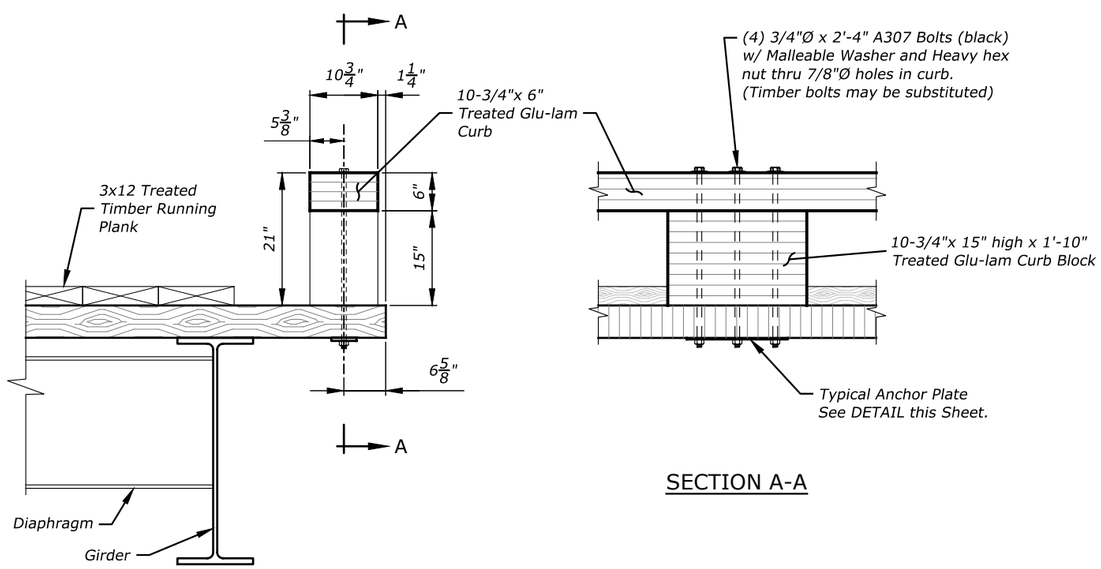

A/16 **DETAIL** *TIMBER CURB*

Scale: 1/2" = 1'-0"

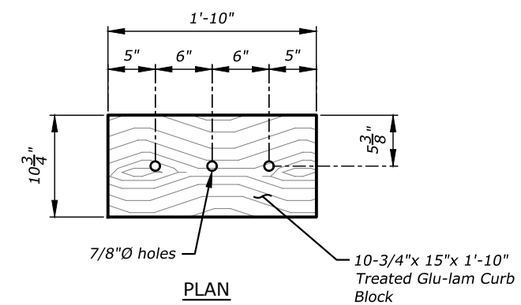

B/16 **DETAIL** *CURB BLOCK*

Scale: 3/4" = 1'-0"

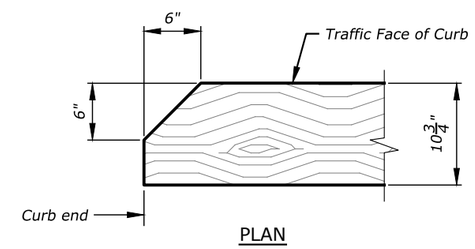

D/16 **DETAIL** *TYPICAL CURB END*

Scale: 3/4" = 1'-0"

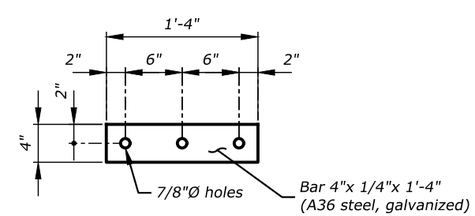

C/16 **DETAIL** *ANCHOR PLATE*

Scale: 3/4" = 1'-0"

REGION ONE

BY	DATE	REVISION DESCRIPTION

DESIGN CT PROJ. NO. 6812
DRAWN ASG DATE Apr-18
CHECKED MJ SURVEYED DJ&A

DJ&A, P.C.
CONSULTING ENGINEERS & LAND SURVEYORS
3203 Russell Street, Missoula, Montana 59801-8591
Phone 406/721-4320 Fax 406/549-6371

NEZ PERCE-CLEARWATER NFs
MEADOW CREEK BRIDGE
FOREST ROAD 382 MP 4.0

CURB DETAILS

SHEET 16 OF 17

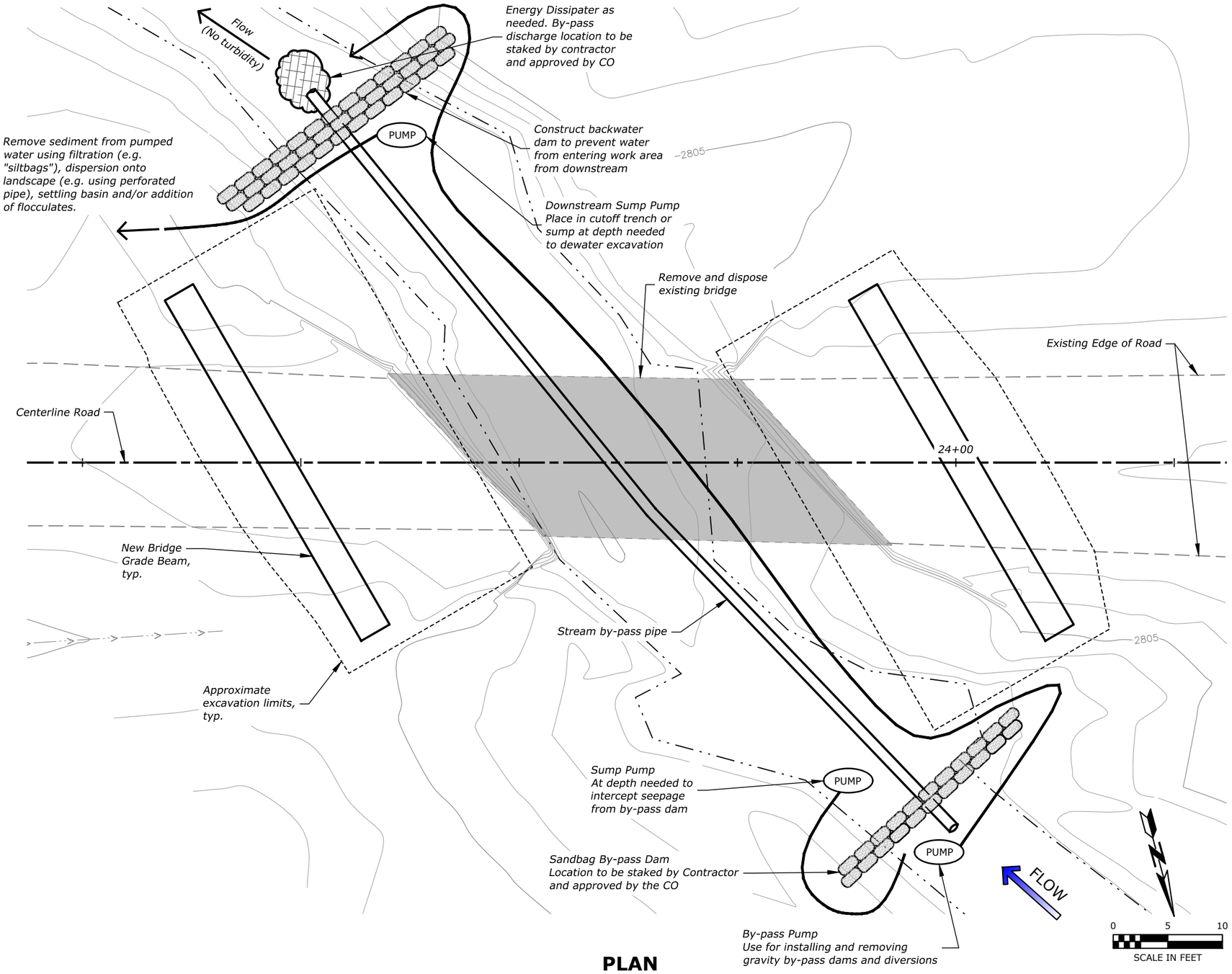

PLAN

NOT FOR CONSTRUCTION

Contractor Submittal & Approval by CO Required According to FSSS 157

NOTES:

1. *Dewater excavations in accordance with FP-14 Sections 208, 209 and 157, as applicable, and the requirements shown. Protect against soil erosion and sedimentation during construction in accordance with FP-14 Section 157 and the project permits.*

2. *Dewatering is the sole responsibility of the Contractor. Develop and submit to the CO a project-specific Dewatering Plan with the Excavation Plan for approval. At a minimum, the Dewatering Plan must include drawings and a written outline illustrating and describing proposed layout, methods, equipment and anticipated stream flow volume. Approval of the Contractor's Dewatering Plan does not relieve the Contractor from completing the work as required. If the Contractor's methods are not producing adequate results, the Contractor must stop work immediately, re-evaluate, and submit a revised Dewatering Plan. Do not proceed with work until the revised Dewatering Plan is approved by the CO. Re-submittal of the Dewatering Plan, if required, is incidental to the work.*

3. *This sheet illustrates the general dewatering requirements and possible methods and equipment and is not considered adequate or complete for this project.*

4. *Contractor is responsible for sizing all pumps, dams, bypass pipe, open channels, and any other means proposed to divert the stream flow.*

5. *All work in the vicinity of the stream is to be completed in accordance with the contract specifications. Standing or running water in the work area does not relieve the Contractor from meeting the specifications.*

6. *Wash the newly construction channel prior to re-watering. This includes hosing the new channel and pumping the turbid wash water onto either vegetated ground or a settling basin in accordance with the approved Dewatering Plan. Return the stream flow to the newly constructed channel slowly and in a manner to minimize sedimentation.*

FOREST SERVICE U S DEPARTMENT OF AGRICULTURE

REGION ONE

BY	DATE	REVISION DESCRIPTION

DESIGN CT PROJ. NO. 6812
DRAWN ASG DATE Apr-18
CHECKED MJ SURVEYED DJ&A

DJ&A, P.C.
CONSULTING ENGINEERS & LAND SURVEYORS
3203 Russell Street, Missoula, Montana 59801-8591
Phone 406/721-4320 Fax 406/549-6371

NEZ PERCE-CLEARWATER NFs
MEADOW CREEK BRIDGE
FOREST ROAD 382 MP 4.0

STREAM DEWATERING REQUIREMENTS

SHEET 17 OF 17

NEZ PERCE-CLEARWATER NFs
MEADOW CREEK
ROAD CROSS SECTIONS

PREPARED BY : DJ&A, P.C.
CONSULTING ENGINEERS & LAND SURVEYORS
3203 Russell Street, Missoula, Montana 59801-8591
Phone 406/721-4320 Fax 406/549-6371

23+00.00

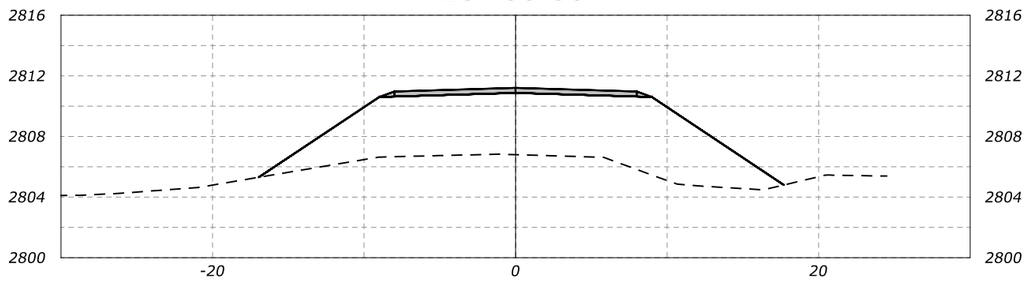

25+00.00

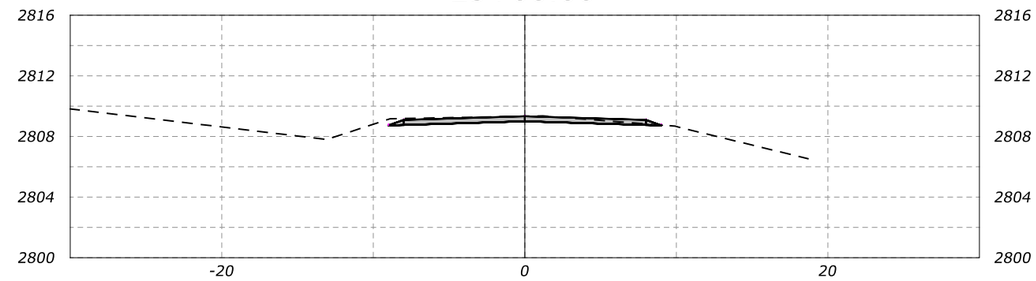

22+60.00

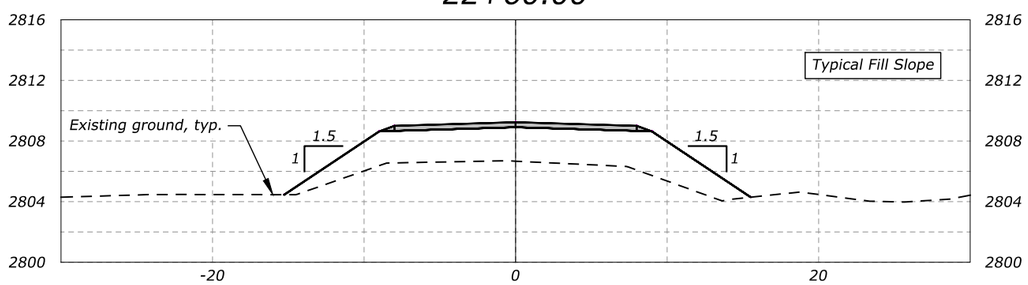

24+40.00

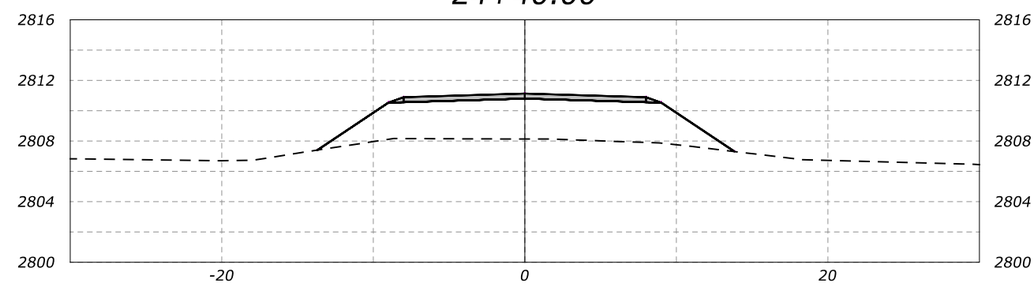

22+20.00

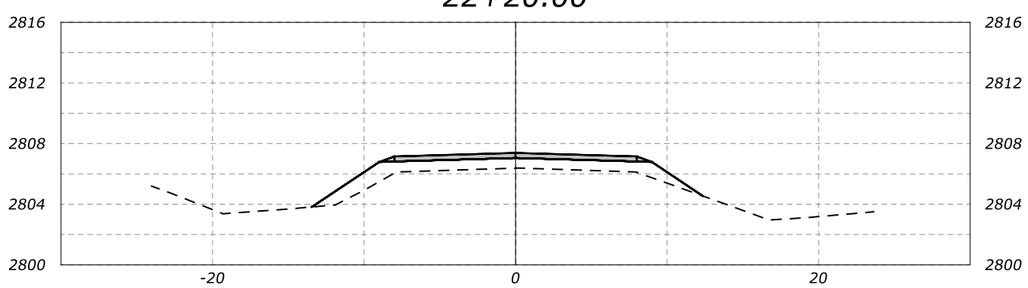

24+02.14

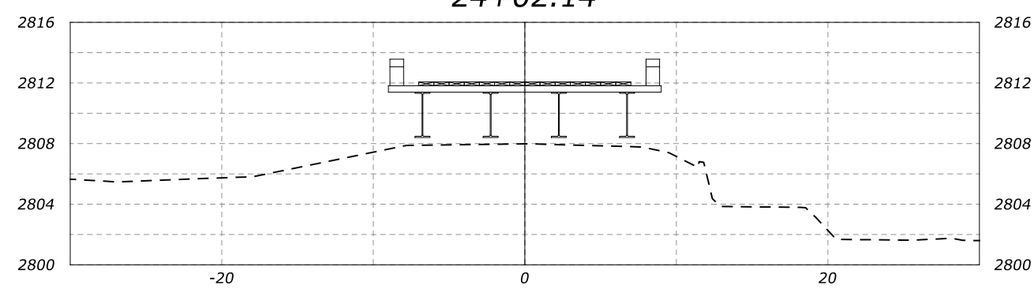

21+80.00

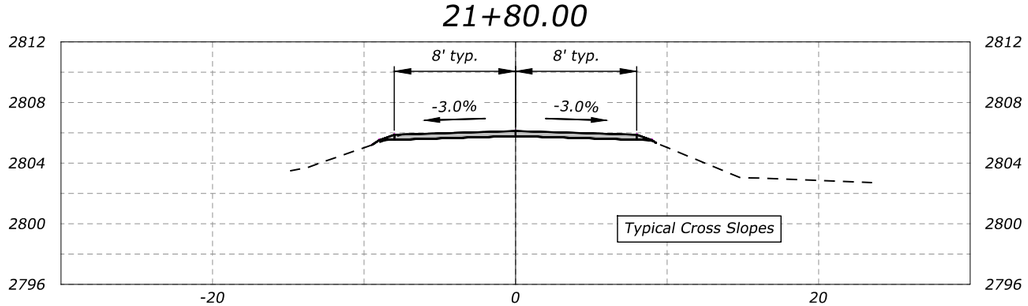
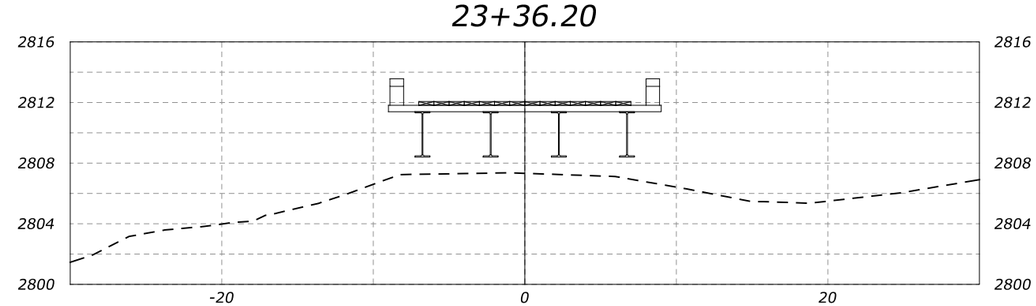
23+36.20