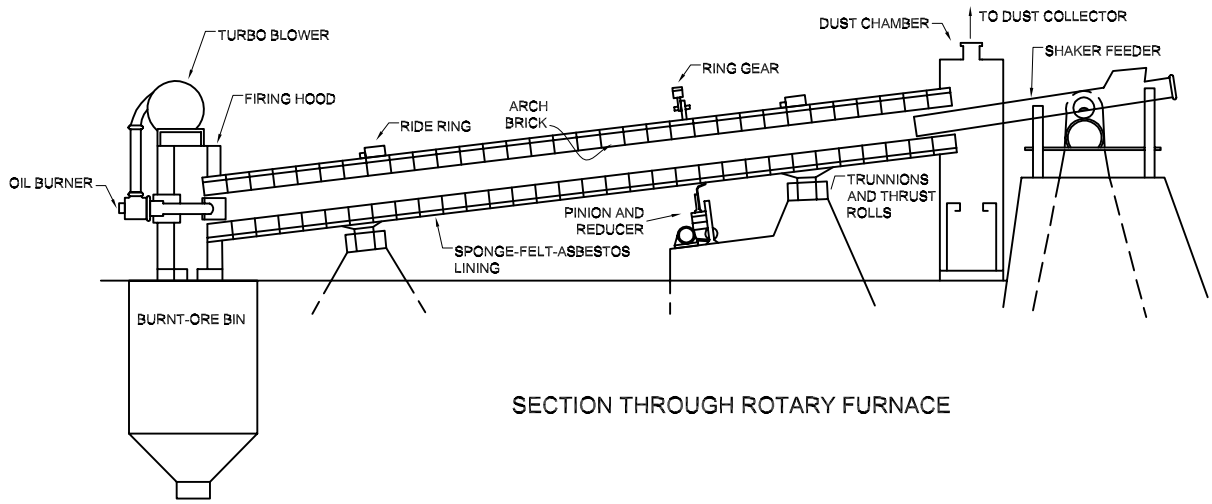

SECTION THROUGH ROTARY FURNACE

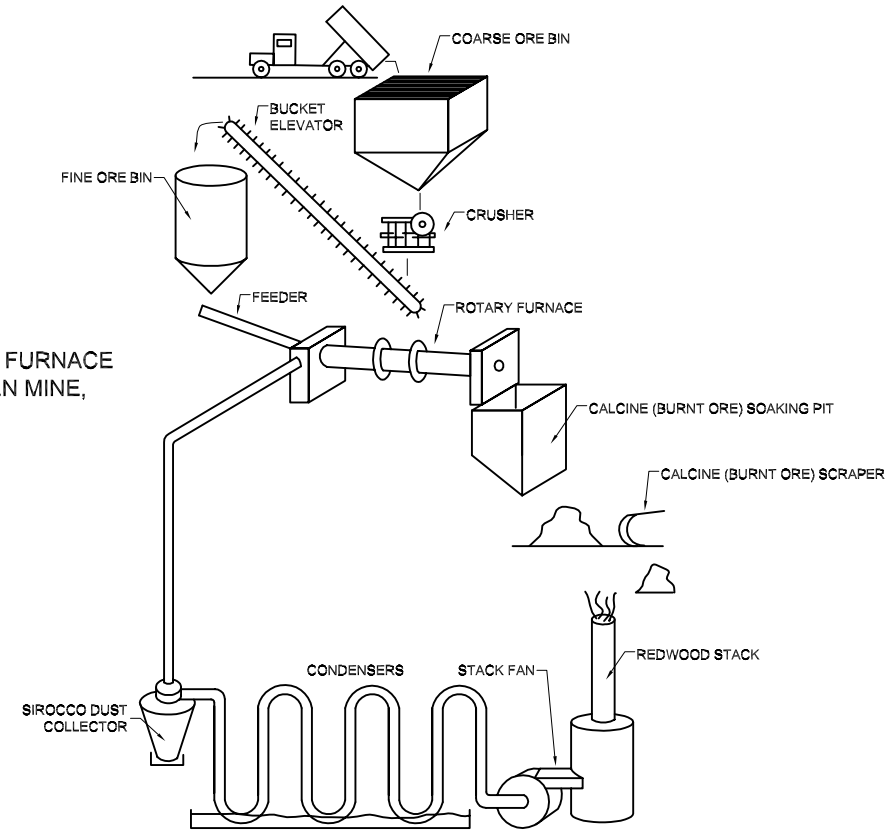

GENERAL LAYOUT OF ROTARY FURNACE PLANT USED AT HORSE HEAVEN MINE, NORTH CENTRAL OREGON

Figure 3. Mercury Processing Overview

PROJECT NUMBER: 2010044	YORK & RANNELLS MINE
DATE: 1/15/01	
DWG BY: KAC / DWG NO: 2010044F4	T16S, R29E, SECTION 7 U.S. FOREST SERVICE MALHEUR NATIONAL FOREST
PROJECT MANAGER: DRW	
REVISED:	CASCADE EARTH SCIENCES A Valmont Industries Company

Adapated from Figure 1 from *Quicksilver in Oregon*, Bulletin 4, DOGAMI, C.N. Schuette, 1938.