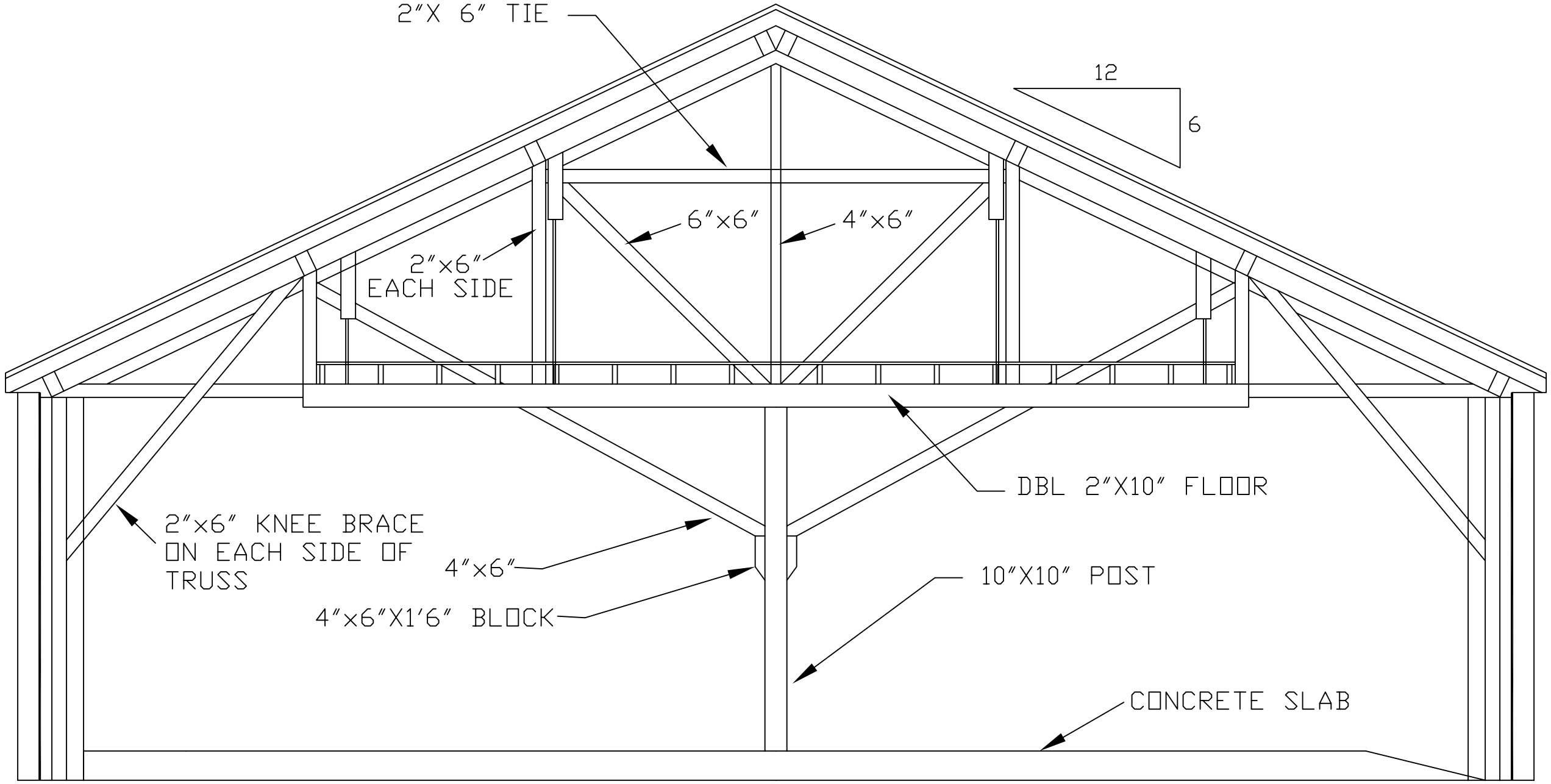

BAR SCALE IN FEET

SECTION 1/A-3

SCALE: 1/4" = 1'0"

U.S. DEPARTMENT OF AGRICULTURE FOREST SERVICE THE PACIFIC NORHTWEST REGION COLVILLE NATIONAL FOREST		REMODEL BLDG. #2305 FIRE CACHE REPUBLIC R.D. REPUBLIC WA
FOREST ENGINEER REC. STAFF DISTRICT RANGER	DRAWN J.KENNEDY DATE: 08/04 DESIGNED DATE: CHECKED DATE: SUBMITTED DATE:	SECTION — SHT. A-3 OF 10