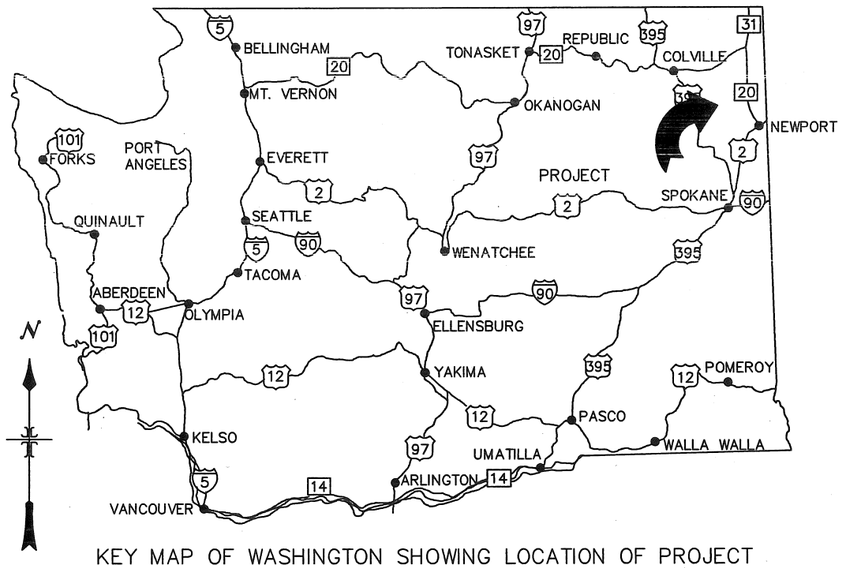

KEY MAP OF WASHINGTON SHOWING LOCATION OF PROJECT

UNITED STATES DEPARTMENT OF AGRICULTURE

FOREST SERVICE – REGION SIX

COLVILLE NATIONAL FOREST

NEWPORT RANGER DISTRICT

DRAWINGS FOR PROPOSED

MIDDLE FORK TIMBER SALE

INDEX TO SHEETS

NO.	DESCRIPTION
1	TITLE SHEET
2	VICINITY MAP
3	ESTIMATE OF QUANTITIES
4	ROAD STRUCTURE DETAILS
5	CULVERT DETAILS
6	DRAINAGE DETAILS
7	CULVERT LISTING
8	PIT PLAN
9	WORK LISTS
10	WORK LISTS
11	GATE DETAILS

TOTAL RECONSTRUCTION 14.38 MILES

ROAD NUMBER	LENGTH	RECONST CONST	SHEET NUMBER	DESIGN VEHICLE	CRITICAL VEHICLE
3500240R	.7	RECONST		LOGTRUCK	LOGTRUCK
3520000R	8.61	RECONST		LOGTRUCK	YARDER
3520200R	1.08	RECONST		LOGTRUCK	LOGTRUCK
3520390R	1.4	RECONST		YARDER	YARDER
3520410R	.37	RECONST		YARDER	YARDER
4347485R	1.05	RECONST		LOGTRUCK	YARDER
4347490R	.8	RECONST		LOGTRUCK	YARDER
4347497R	.37	RECONST		LOGTRUCK	YARDER

PROJECT COORDINATOR:

NAME DATE

TRANSPORTATION MANAGER:

NAME DATE

RECOMMENDED BY:

NAME FOREST ENGINEER DATE 9/11/15

APPROVED BY:

Rodney W. Snolden 09/12/15

NAME DISTRICT RANGER DATE

MIDDLE FORK TIMBER SALE VICINITY MAP

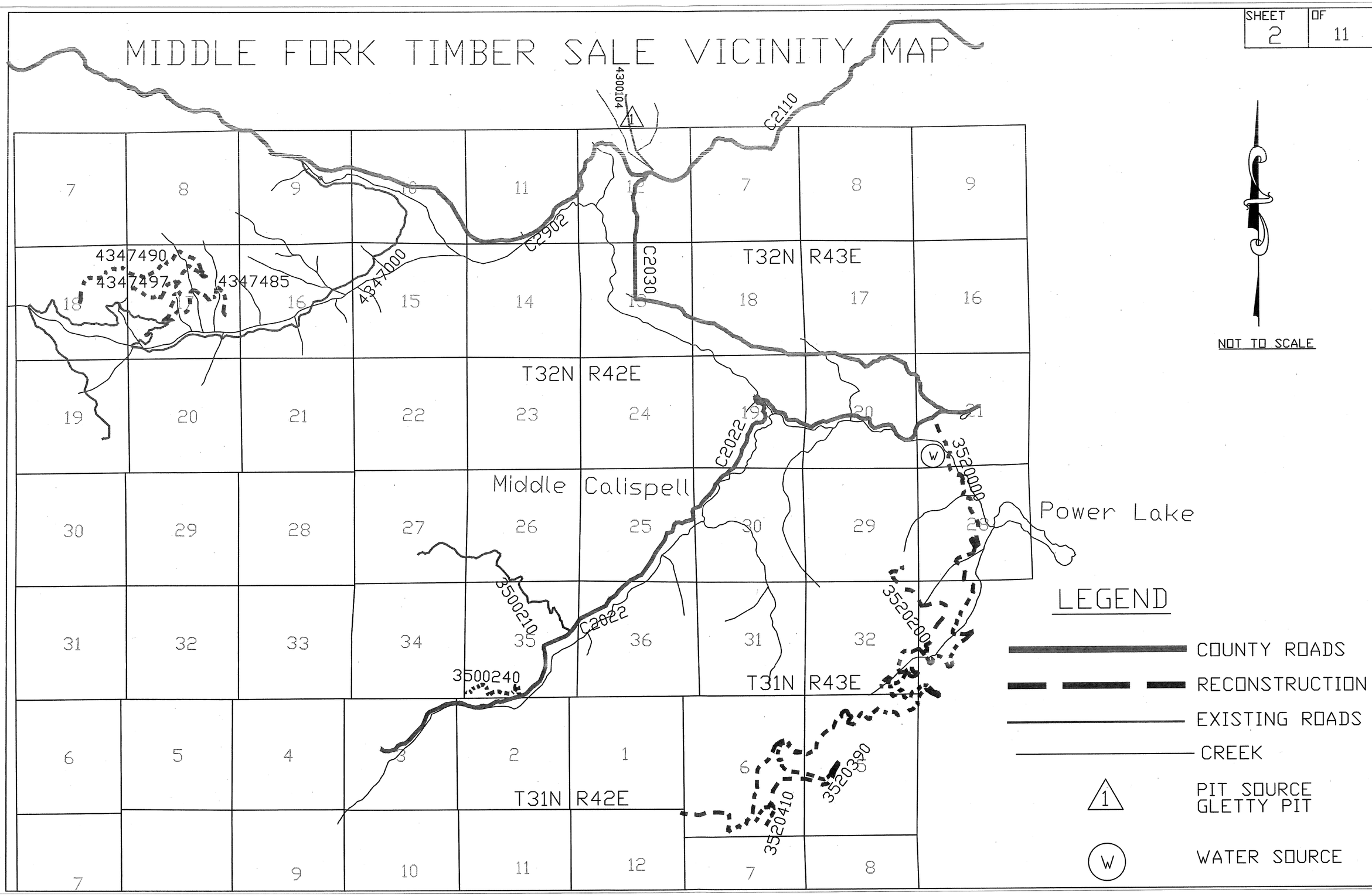

ESTIMATE OF QUANTITIES

Item Number	Description	Unit	3500240R 0.7mi	3520000R 8.61mi	3520200R 1.08mi	3520390R 1.4mi	3520410R .37mi	4347485R 1.05mi	4347490R .8mi	4347497R .37mi	Project Total	Remarks
15101	Mobilization	ls	All	All	All	All	All	All	All	All	**All**	
15219	Establishing clearing limits	mile			1.08	1.40	0.37	1.05	0.80		**4.70**	
20103	Clearing and grubbing, disposal of tops and limbs f,l, logs f, and stumps f.	mile			1.08	1.40	0.37	1.05	0.80		**4.70**	
20402	Roadway excavation, compaction method C finish method C.	mile			1.08	1.40	0.37	1.05	0.80		**4.70**	
20419	Drainage Excavation, Roadside Ditch	ft	221								**221**	
20420A	Drainage excavation, type Drain Dip	each	3			3			3	1	**10**	
20420B	Drainage excavation, type Outslope Drain	each	2						2		**4**	
23050	Roadside Brushing	mile		8.61						0.37	**8.98**	
30318	Roadway Reconditioning	mile	0.70	8.61						0.37	**9.68**	
32232	Haul and place stockpiled aggregate, compaction method H	cy	40			58		184	80	8	**370**	
60201A	18 inch pipe culvert	ft		250		26					**276**	
60201B	24 inch pipe culvert	ft		26							**26**	
62501	Seeding dry method	acre	2.19	27.13	3.40	4.40	1.17	3.31	2.52	1.16	**45.28**	
65001	Furnish and Install Type II Gate	each			1			1	1		**3**	**Purchaser Install Object Markers**

TYPICAL ROADWAY SECTION

(NOT TO SCALE)

ROAD STRUCTURE DETAILS

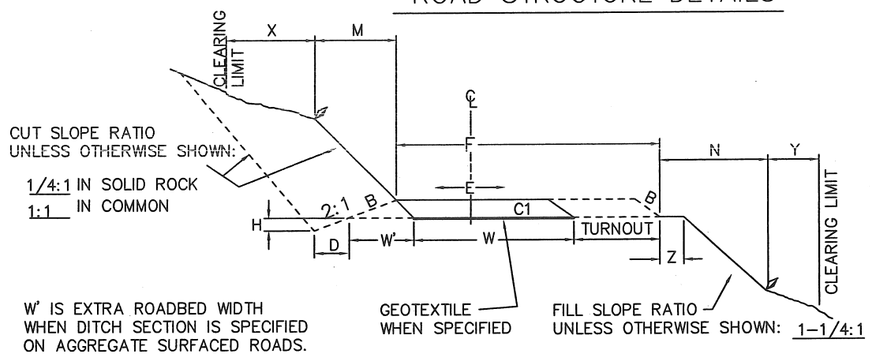

TURNAROUND & TURNOUT SYMBOLS

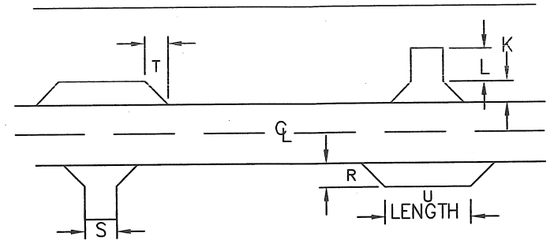

NOTES

1. CURVE WIDENING, WHEN SPECIFIED, SHALL BE ADDED TO INSIDE OF CURVE.
2. TAPER LENGTH ON CURVE WIDENING IS LOCATED IN THE CURVE DATA BOX ON THE PLAN SHEETS.
3. SEEDING AND/OR MULCHING AREA INCLUDES SECTIONS SHOWN ON TYPICALS AND ALL OTHER AREAS DISTURBED BY CONTRACTOR.
4. TURNOUTS AND CURVE WIDENING SHALL BE SURFACED TO SAME DEPTH AS THE TRAVELED WAY AND TO THE DIMENSIONS SPECIFIED IN THE PLANS.
5. CONSTRUCTION STAKES SHALL BE 0.3 in. THICK X 1.5 in. WIDE X 24 in. LONG, +/- 0.1in. THICKNESS AND THE TOP 2in. TO BE PAINTED RED. CLEARING FLAGGING SHALL BE GLO PINK. STAKES SHALL BE SET ON UPHILL SIDE OF CENTERLINE.
6. SLOUGH WIDENING "Z" SHALL BE 1ft. WHERE FILLS ARE 5ft. OR LESS AND 2ft. WHERE FILLS ARE GREATER THAN 5ft.
7. ALL DITCHES SHALL BE SLOPED TO DRAIN.
8. SEEDING IS NOT REQUIRED WHERE SLOPE RATIOS ARE 1/2:1 OR STEEPER.
9. ROADWAY FINISHING FOR ALL ROADS IS METHOD C PER FSSS 204.13
10. IN AREAS WHERE DD OR OSD FALL WITHIN A DESIGNATED AGGREGATE SPREAD, PLACE AGGREGATE AS SHOWN IN DRAINAGE DETAIL.

ROAD NUMBER	M - MANDATORY o - OPTIONAL	STATION or M.P.	to STATION or M.P.	GRADING: CONSTRUCTION TOLERANCE	OUTSLOPE (O) INSLOPE (I) CROWN (C) 4 %	3/ ROADBED WIDTH FT.	2/ DITCH DIMENSIONS FT.		TURN AROUND "J" TAPER WIDTH FT.	LENGTH FT.	WIDTH FT.	TURNOUTS WIDTH FT.	LENGTH FT.	TAPER FT.	2/ AGGREGATE: MIN TRAVELED WAY WIDTH FT.	GRADATION	COMPACTED DEPTH INCH	SLOPE RATIO	REVEGETATION: SEEDING and/or MULCHING AREA					CLEARING: MINIMUM CLEARING WIDTH	FEET BEYOND TOP OF CUT TO TOE OF FILL		MINIMUM ROADWAY BRUSHING WIDTH
					E	W	D	H	K	L	S	R	U	T	F	C1	C1	B	M	N	D	F		FT	X	Y	FT
				K	1/		2'	1'	15'	15'	14'	8'	50'	25'			5/	2:1	X	X	X	X					
3520000R	M	0.00	8.61			14'									14'												22'
3520200R	M	0.00	1.08			12'									12'												
3500240R	M	0.00	0.7			12'									12'												
3520390R	M	0.00	1.4			14'									14'												
3520410R	M	0.00	.37			14'									14'												
4347485R	M	0.00	1.05			14'									14'												
4347490R	M	0.00	.8			12'									12'												
4347497R	M	0.00	.37			12'									12'												

FOOTNOTES

1/ OUTSLOPE ALL ROADS EXCEPT INSLOPE IN DITCHED AREAS AND CULVERT CATCH BASINS UNLESS OTHERWISE SHOWN ON PLANS.

2/ AT LOCATIONS SHOWN ON THE DRAWINGS.

3/ CONSTRUCT ADDITIONAL WIDTH IN ALL AREAS WHERE PLACEMENT OF AGGREGATE IS SHOWN ON THE PLANS

4/ CLEARING LIMITS SHALL BE ESTABLISHED FROM STAKE NOTES OR 13 FEET FROM CENTERLINE WHICHEVER IS GREATER.

5/ DEPTHS AS SHOWN IN THE PLANS

ABBREVIATIONS

DD=DRAIN DIP
OSD=OUTSLOPE DRAIN
TOR=TURNOUT RIGHT
TOL=TURNOUT LEFT
TAR=TURNAROUND RIGHT
TAL=TURNAROUND LEFT
CWR=CURVE WIDENING RIGHT
CWL=CURVE WIDENING LEFT
LOD=LEADOUT DITCH
——=GROUND
——=GRADE

CULVERT DETAILS

CULVERT TYPES

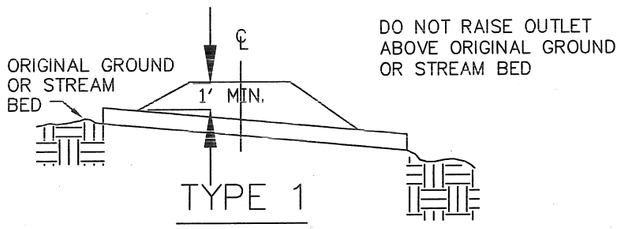

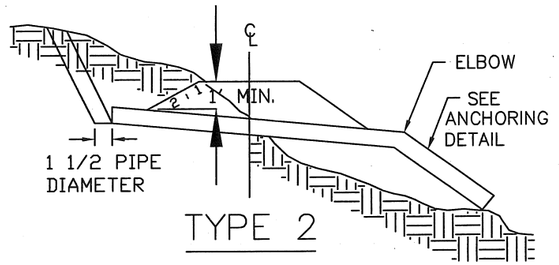

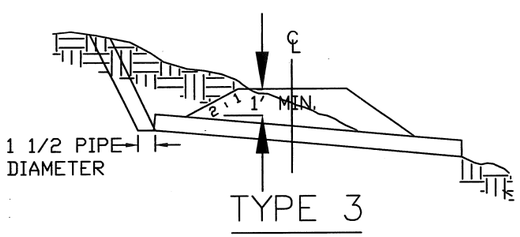

CATCH BASIN DETAIL AND INLET & OUTLET PROTECTION

FOR ALL NEW TYPE 1, 2 & 3 CULVERT INSTALLATION

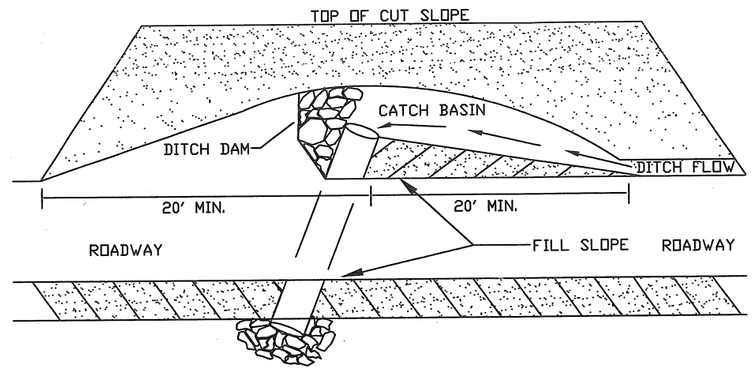

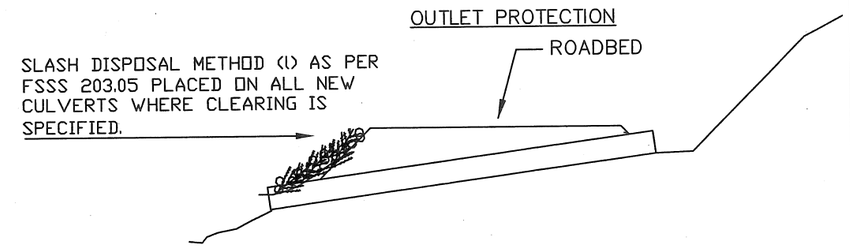

SKEW DIAGRAM

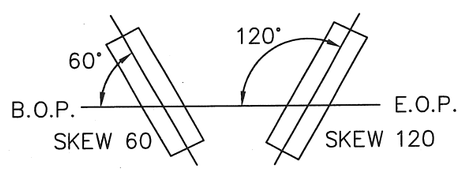

LEADOUT DITCH

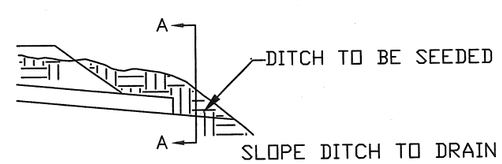

LEADOUT DITCH

SECTION A–A

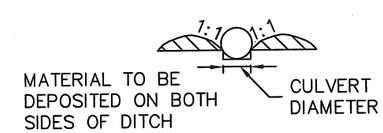

ARMORING CULVERT FILL SLOPES

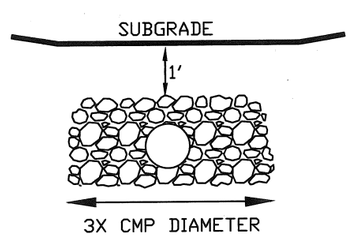

ARMOR FILL TO 1' BELOW SUBGRADE ELEVATION

RIPRAP CULVERT INLET & OUTLET FOR ENERGY DISSAPATION

WHEN DESIGNATED ON PLANS

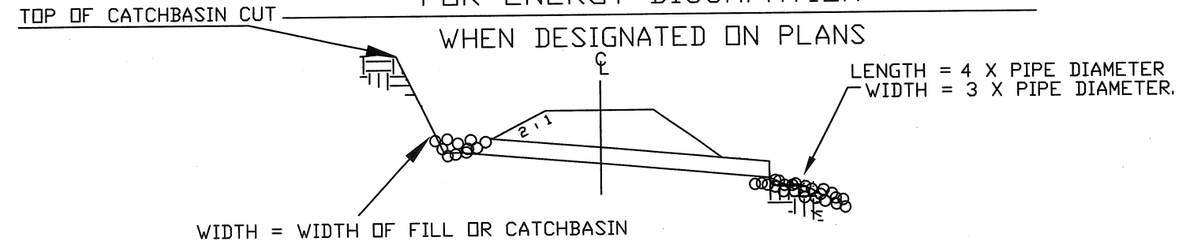

DRAINAGE DETAILS

OUTSLOPE DRAIN & DRAIN DIP

SLOPE TREATMENT

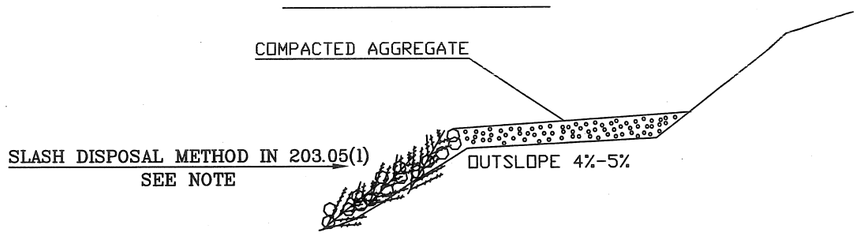

OUTSLOPE DRAIN & DRAIN DIP

SLOPE TREATMENT

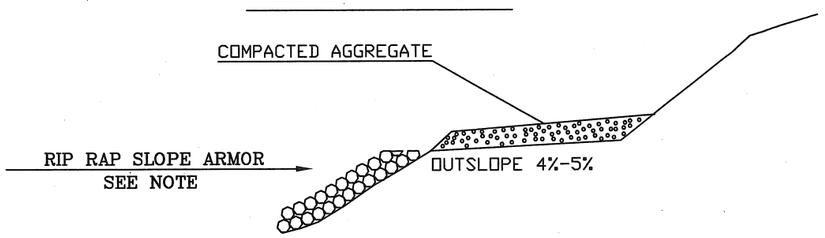

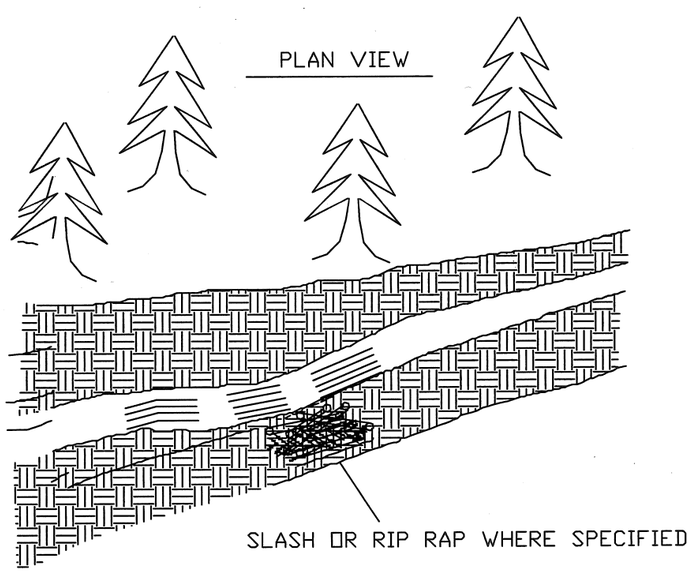

DRAIN DIP DETAILS (DD)

PROFILE VIEW

DESIGN FOR ROADS WITH GRADES (0 - 10%)

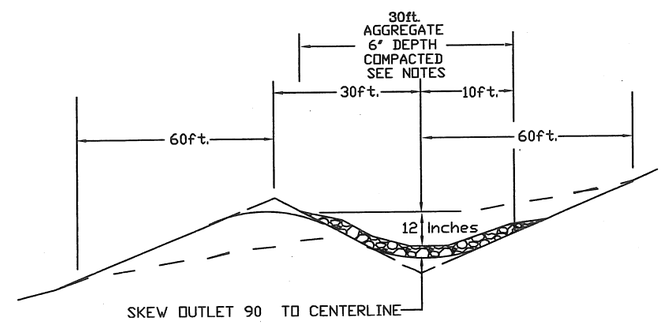

DESIGN FOR ROADS WITH GRADES (11 - 14%)

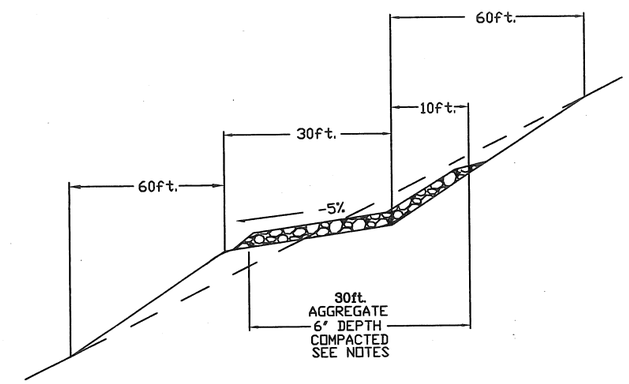

DESIGN FOR ROADS WHERE CRITICAL VEHICLE IS A LOWBOY WITH GRADES (0 - 7%)

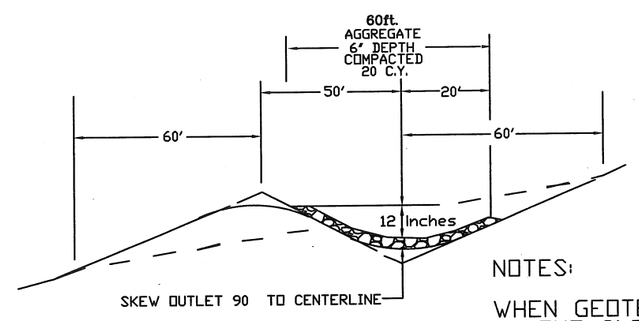

OUTSLOPE DRAIN DETAIL (OSD)

PROFILE VIEW

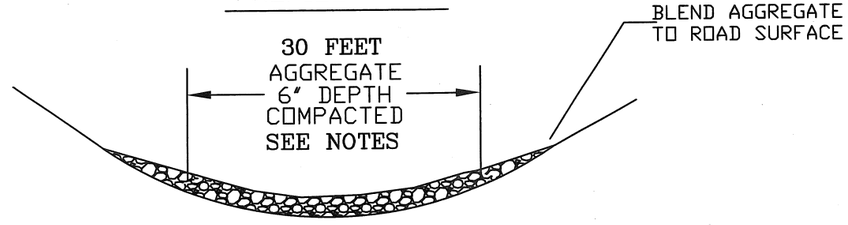

NOTES:

WHEN GEOTEXTILE IS SPECIFIED IN DRAIN DIPS OR OUT SLOPE DRAINS, SIZE SHALL BE 15'W X 30'L

DO NOT INTERCEPT DITCH WATER WHERE DRAIN DIPS OR OUT SLOPE DRAINS ARE DESIGNATED IN DITCHED SECTIONS, UNLESS OTHERWISE SPECIFIED.

SLASH SHALL BE PLACED ON FILL SLOPES TO A DEPTH OF 1' AT THE LOWEST POINT IN DRAIN DIP OR OUTSLOPED DRAIN, AND EXTEND 5' EACH WAY.
THIS APPLYS TO ALL NEW AND RESHAPED DRAINS THAT ARE WITHIN ALL CLEARING LIMIT AREAS.

PLACE RIP RAP ON FILL SLOPES OF DRAIN DIP OR OUTSLOPED DRAINS WHERE SPECIIED, 1' DEEP, EXTENDING 4' EACHWAY OF LOWEST POINT.

12' ROADBEDS REQUIRE 8 C.Y. OF IN PLACE AGGREGATE
14' ROADBEDS REQUIRE 10 C.Y. OF IN PLACE AGGREGATE

CULVERT LISTING

GA. - GAUGE
AL. - ALUMINUM
FE. - STEEL
TF. - TO FIT

SLASH DISPOSAL METHOD (1) AS PER FSSS 203.05 SHALL BE PLACED ON ALL CULVERT INSTALLATIONS WHERE CLEARING IS SPECIFIED.

DESIGNED			AS BUILT			CORRUGATION & THICKNESS		INSTALLATION DETAILS				REMARKS
STATION OR MILE POST	DIAMETER IN INCHES	LENGTH IN FEET	STATION	DIAMETER IN INCHES	LENGTH IN FEET	2 2/3" x 1/2" .064 FE (16 GA.) OR .060 AL (16 GA.)		TYPE	SKEW	COMPACTION METHOD	STAKING METHOD	
Rd 3520000												
MP .04	18	32				X		3	TF	A	1	
MP .29	18	40				X		3	TF	A	1	
MP .68	18	32				X		1	TF	A	1	
MP .76	24	26				X		1	TF	B	1	
MP 1.54	18	30				X		1	TF	A	1	
MP 4.0	18	42				X		1	TF	A	1	
MP 6.55	18	34				X		3	TF	A	1	
MP 8.02	18	40				X		1	TF	A	1	
Rd 3520390												
49+31	18	26				X		1	TF	A	1	

GLETTY PIT DEVELOPMENT PLAN

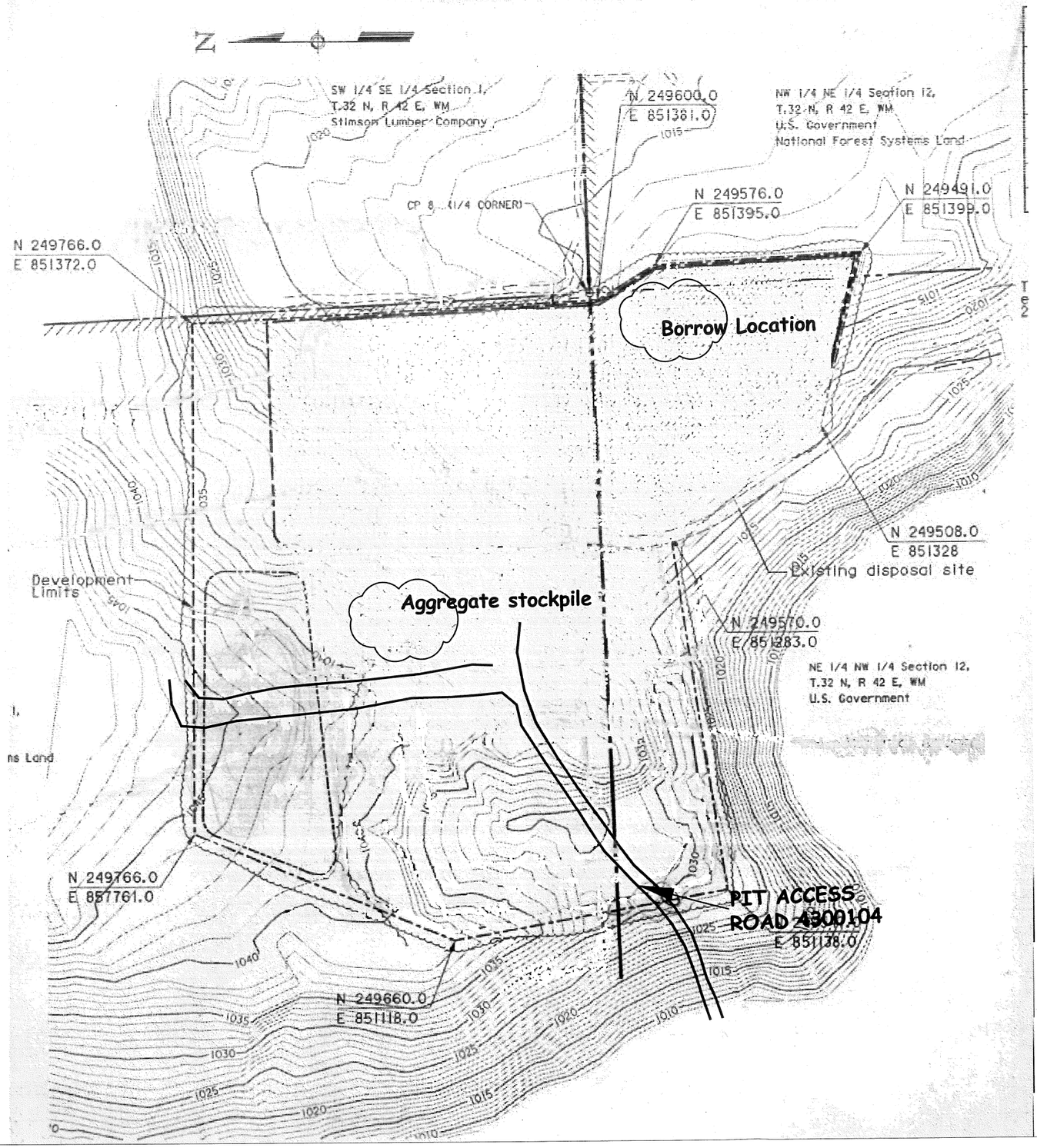

MIDDLE FORK T.S.
GLETTY PIT

WORK SUMMARY

ROAD 3500240R

STA	WORK ITEMS
00+00	JCT CR #2022
	BEGIN ROADBED RECONDITIONING
7+25	CONSTRUCT OSD
9+30	GATE - PRIVATE LAND
9+88	CONSTRUCT DD
12+93	CONSTRUCT DD
15+65	CONSTRUCT DD
18+08	CONSTRUCT OSD
25+57	BEGIN CONSTRUCTING DITCH RT
27+78	END CONSTRUCTING DITCH RT
36+73	EOP

ROAD 3520200R

STA	WORK ITEMS
00+00	JCT 3520000
	BEGIN ESTABLISHING CLEARING LIMITS
	BEGIN CLEARING & GRUBBING
	BEGIN CONSTRUCTING 12' ROADBED
	INSTALL TYPE II GATE
13+72	EXISTING TOL
25+87	RECONSTRUCT EXISTING TAR
37+07	EXISTING TOL
37+47	REMOVE EXISTING BERM
57+27	CONSTRUCT TAL-TOR
	EOP

ROAD 3520000R

MP	WORK ITEMS
0.00	BEGIN ROADSIDE BRUSHING
	BEGIN ROADBED RECONDITIONING
0.04	REMOVE AND DISPOSE EXISTING CMP
	INSTALL NEW 18"x32' CMP
0.29	REMOVE AND DISPOSE EXISTING CMP
	INSTALL NEW 18"x40' CMP
0.68	REMOVE AND DISPOSE EXISTING CMP
	INSTALL NEW 18"x32' CMP
0.76	REMOVE AND DISPOSE EXISTING CMP
	INSTALL NEW 24"x26' CMP
1.54	REMOVE AND DISPOSE EXISTING CMP
	INSTALL NEW 18"x30' CMP
1.71	JCT 3520025 RD RT
4.00	REMOVE AND DISPOSE EXISTING CMP
	INSTALL NEW 18"x42' CMP
6.55	REMOVE AND DISPOSE EXISTING CMP
	INSTALL NEW 18"x34' CMP
7.00	JCT 3520390 RD LT
8.02	REMOVE AND DISPOSE EXISTING CMP
	INSTALL NEW 18"x40' CMP
8.61	CONSTRUCT TAL-TOR
	EOP

ROAD 3520390R

STA	WORK ITEMS
00+00	JCT 3520000
	BEGIN ESTABLISHING CLEARING LIMITS
	BEGIIN CLEARING & GRUBBING
	BEGIN CONSTRUCTING 14' ROADBED
	BEGIN CONSTRUCTING DITCH LT
2+69	CONSTRUCT DD
4+15	CONSTRUCT DD
7+58	CONSTRUCT DD
20+00	END CONSTRUCTING DICTH LT
	JCT 3520400 LT
48+80	BEGIN PLACING 6" AGGREGATE
49+31	INSTALL NEW 18"x26' CMP
49+80	END PLACING 6" AGGREGATE
73+70	JCT 3520410 RT
	EOP

WORK SUMMARY

ROAD 3520410R

MP	WORK ITEMS
0.00	JCT 3520390
	BEGIN ESTABLISHING CLEARING LIMITS
	BEGIN CLEARING & GRUBBING
	BEGIN CONSTRUCTING 14' ROADBED
19+53	CONSTRUCT TOL-TAR
	EOP

ROAD 4347485R

STA	WORK ITEMS
00+00	JCT 4347000
	BEGIN ESTABLISHING CLEARING LIMITS
	BEGIN CLEARING & GRUBBING
	BEGIN CONSTRUCTING 14' ROADBED
3+50	EXISTING GATE - REMOVE AND INSTALL AT STA 0+50
7+25	BEGIN RECONSTRUCTING DITCH LT
	BEGIN PLACING 6" AGGREGATE
8+05	END RECONSTRUCTING DITCH LT
8+75	END PLACING 6" AGGREGATE
21+50	BEGIN PLACING 6" AGGREGATE
24+00	END PLACING 6" AGGREGATE
24+65	BEGIN RECONSTRUCTING DITCH LT - 20'
	RECONSTRUCT EXISTING CATCH BASIN
38+40	BEGIN PLACING 6" AGGREGATE
41+00	END PLACING 6" AGGREGATE
55+50	RECONSTRUCT TOR
	EOP

ROAD 4347490R

STA	WORK ITEMS
00+00	JCT 4347000
	BEGIN ESTABLISHING CLEARING LIMITS
	BEGIIN CLEARING & GRUBBING
	BEGIN CONSTRUCTING 12' ROADBED
	INSTALL TYPE II GATE
1+54	REMOVE EXISTING BERM
5+21	REMOVE EXISTING BERM
5+80	REMOVE EXISTING BERM
6+79	REMOVE EXISTING BERM
8+06	CONSTRUCT DD
10+47	CONSTRUCT DD
15+42	BEGIN CONSTRUCTING DITCH LT
17+42	END CONSTRUCTING DITCH LT
22+22	CONSTRUCT OSD
22+71	JCT 4347497 LT
25+35	RECONSTRUCT DD-NO ROCK
26+87	REMOVE EXISTING BERM
27+63	BEGIN PLACING 6" AGGREGATE
29+00	BEGIN CONSTRUCTING DITCH LT
29+27	END PLACING 6" AGGREGATE
30+05	END CONSTRUCTING DITCH LT
37+84	CONSTRUCT OSD
42+24	CONSTRUCT TAR
	EOP

ROAD 4347497R

STA	WORK ITEMS
00+00	JCT 4347490
	BEGIN ROADSIDE BRUSHING
	BEGIN ROADBED RECONDITIONING
0+79	REMOVE EXISTING BERM
14+10	CONSTRUCT DD
19+51	CONSTRUCT TOL-TAR
	EOP

GATE DETAIL TYPE II

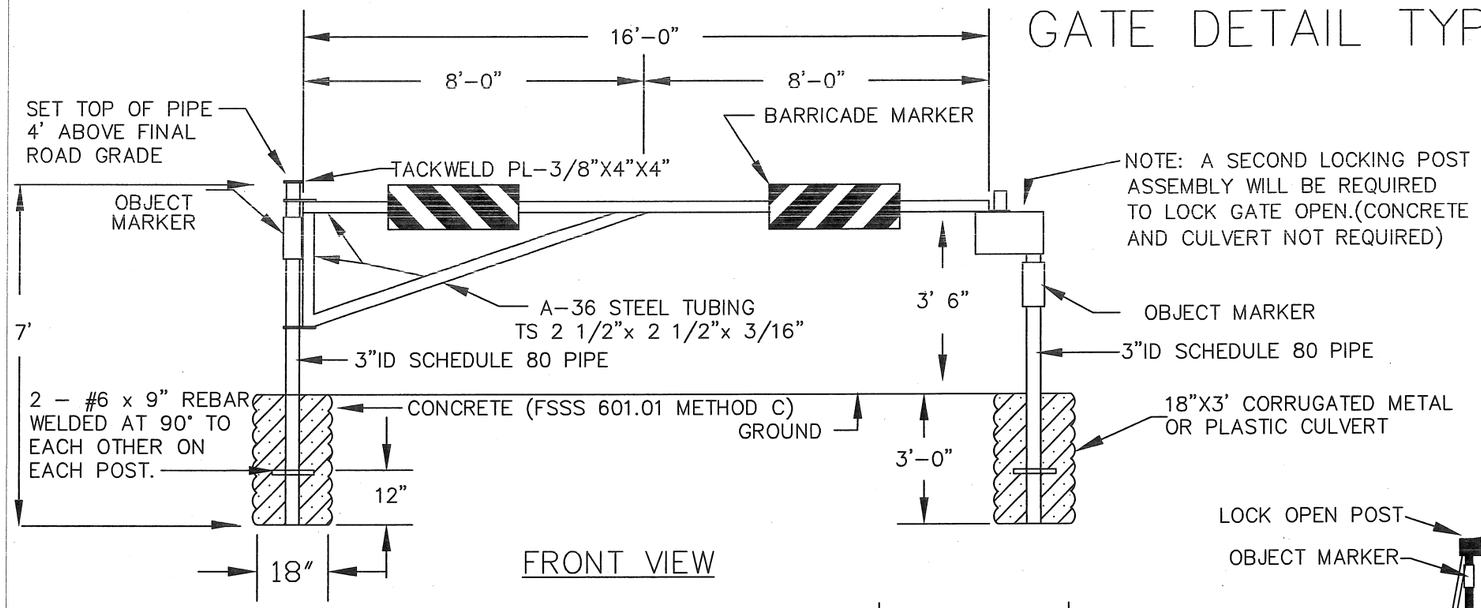

FRONT VIEW

NOTES

1. EXTERIOR METAL EPOXY PAINT, COCOA BROWN UNLESS OTHERWISE APPROVED BY THE ENGINEER.
2. BARRICADE MARKERS SHALL MEET MUTCD REQUIREMENTS FOR TYPE 1 (FBM-L AND FBM-R). COLOR - RED & WHITE. 4 REQUIRED, 2 LEFT SIDE STRIPE, 2 RIGHT SIDE STRIPE.
3. OBJECT MARKERS SHALL MEET MUTCD REQUIREMENTS FOR TYPE 2. 6 REQUIRED, 2 ON EACH SIDE OF POSTS DESIGNATED.
4. ALL WELDS REQUIRED TO MANUFACTURE GATE, UNLESS OTHERWISE SHOWN, SHALL BE FILLET AND SHALL BE OF THE SAME SIZE AS THE THICKNESS OF THE SMALLER OF THE TWO PIECES BEING JOINED.
5. ALL MARKERS SHALL MEET MUTCD REQUIREMENTS FOR HIGH INTENSITY PRISMATIC RETROFLECTIVE SHEETING.

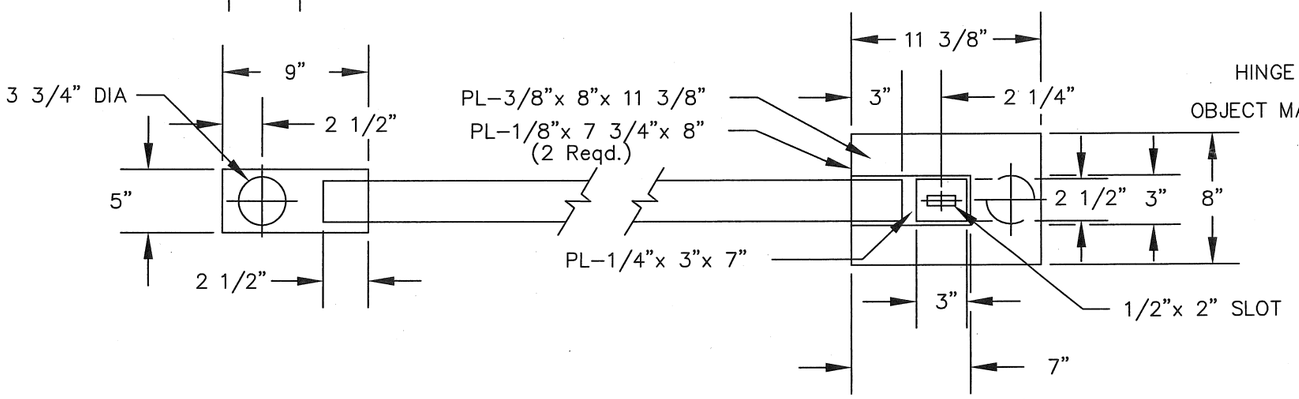

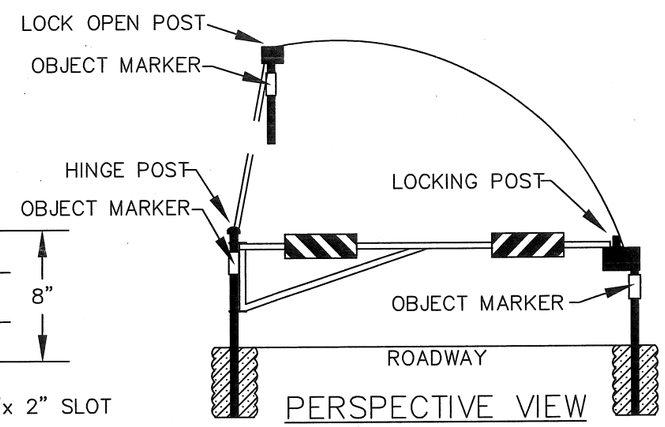

PERSPECTIVE VIEW
(LOCKING GATE & POST)

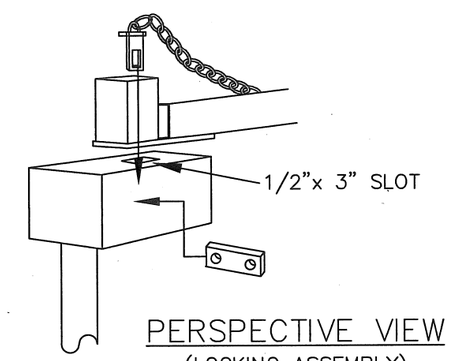

PERSPECTIVE VIEW
(LOCKING ASSEMBLY)

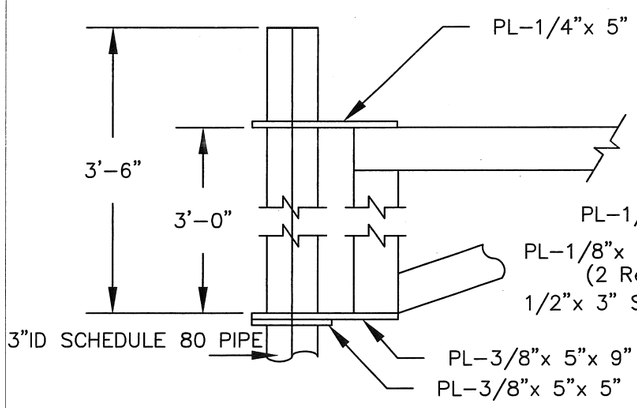

HINGE POST DETAIL

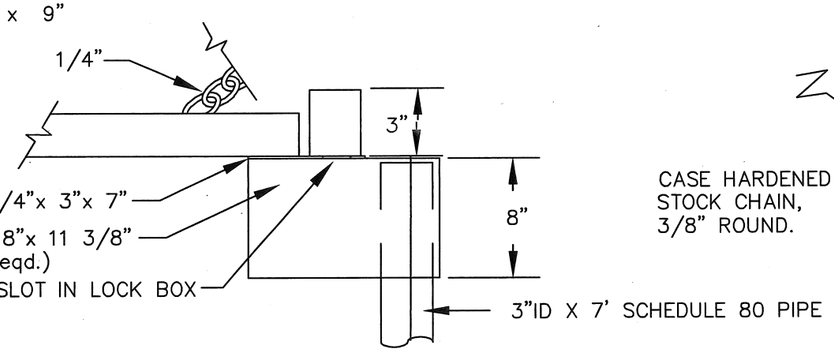

LOCKING POST DETAIL

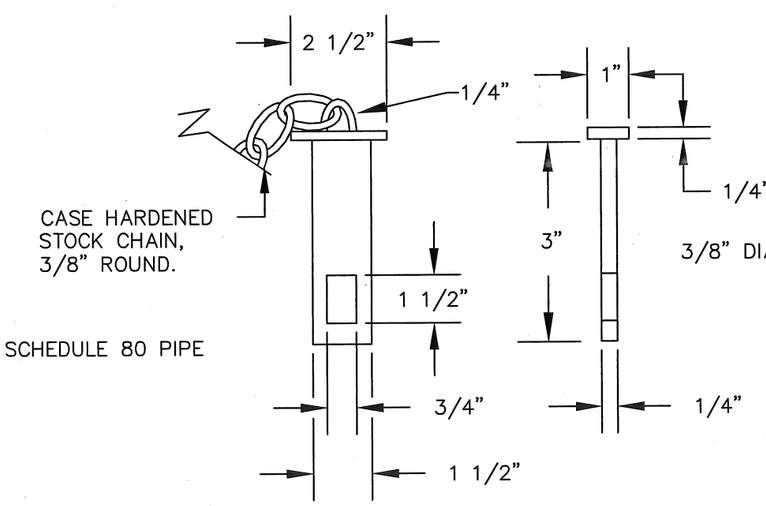

MASTER PIN DETAIL

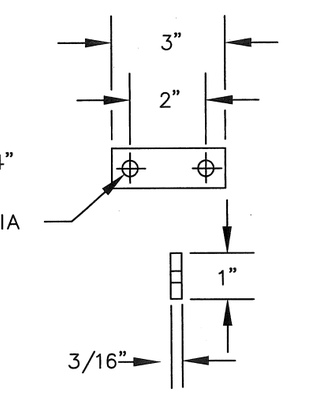

DOUBLE LOCK PIN DETAIL