DEPARTMENT OF AGRICULTURE
FOREST SERVICE
REGION 9
ALLEGHENY NATIONAL FOREST

SRSP West Tuna Stewardship
Project No. 002

FR 137 (Station 159+45) UNT to Shingle Mill Hollow Culvert Replacement (Aquatic Organism Passage Simulation)

Bradford Ranger District
McKean County
Pennsylvania

Vicinity Map 2
Road Summary 3
Schedule of Items 4
General Notes 5
Road Log - Work Descriptions 6
Roadbed Details & Drawings 7
Specifications for Specified Roads 10

The location and design elements of these facilities have been correlated with the plans, policies and constraints of the approved Greater Stickney Environmental Assessment.

Plans are to be used with "Standard Specifications for Construction of Roads and Bridges on Federal Highway Projects" FP-03 with Special Project Specifications thereto included in this contract.

Prepared By:

Fran E. Martinez

Approved By:

12-3-15

District Ranger **Date**

12-7-15

Forest Engineer **Date**

Dec 7, 2015

Forest Supervisor **Date**

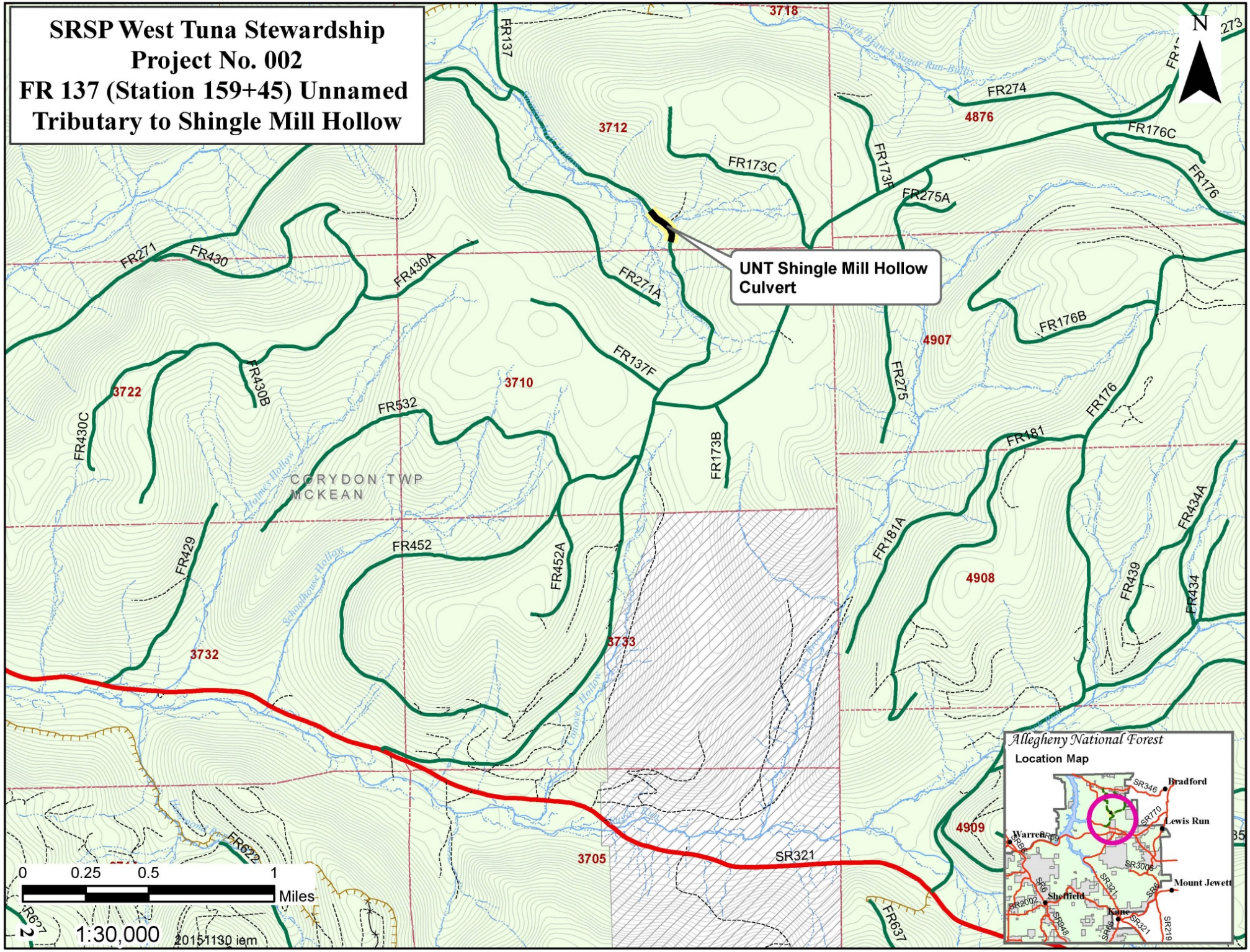
SRSP West Tuna Stewardship
Project No. 002
FR 137 (Station 159+45) Unnamed
Tributary to Shingle Mill Hollow
N
UNT Shingle Mill Hollow
Culvert
FR137
FR274
FR176C
FR176
FR173C
FR173B
FR275A
FR271
FR430
FR430A
FR271A
FR176B
FR137F
FR275
FR430B
FR532
FR176
FR181
FR430C
FR173B
CORYDON TWP
MCKEAN
FR434A
FR429
FR452
FR452A
FR181A
FR439
FR434
FR622
SR321
FR637
3718
3712
4876
4907
3722
3710
4908
3733
3732
3705
4909
0
0.25
0.5
1
Miles
1:30,000
20151130 iem
Allegheny National Forest
Location Map
Bradford
Lewis Run
Warren
Mount Jewett
Sheffield
Kane

Road Summary

SPECIFIED ROADS

a. Description of Work:

FR 137 (Station 159+45) UNT to Shingle Mill Hollow culvert removal and installation

Mobilization, Soil Erosion & Pollution Control, Clearing and Grubbing, Removal of Structures, Placed Riprap, DSA Limestone, Road Reconditioning, Seeding & Mulching, Installation of Object Markers, Temporary Traffic Control, Culvert Installation, and Placement of Streambed Simulation Rock.

b. Construction Costs:

Culvert Name/Location	Miles	Engineer's Estimate
FR 137 - Unnamed Tributary to Shingle Mill Hollow Culvert (Station 159+45)	0.1	$

c. Completion dates: 9/30/2017

Schedule of Items

FR 137 - Unnamed Tributary to Shingle Mill Hollow Culvert (Station 159+45)						
Pay Item	Description	Method of Measure	Pay Unit	Estimated Quantity	Engineer's Estimate Unit Price	Engineer's Extended Total
15101	Mobilization (Lump Sum)	LSQ	All	1		$
15713	Soil Erosion & Pollution Control (Lump Sum)	LSQ	All	1		$
20102	Clearing & Grubbing (Lump Sum)	LSQ	All	1		$
20301	Removal of culvert	CQ	Each	1		$
20455	Embankment construction	VQ	Cubic Yard	83		$
20801	Structural excavation	VQ	Cubic Yard	60		$
20803	Structural backfill	VQ	Cubic Yard	69		$
25102-1	Placed riprap, NSA Size #R-3 (limestone)	VQ	Ton	23		$
25102-2	Placed riprap, NSA Size #R-4 (limestone)	VQ	Ton	23		$
25102-3	Placed riprap, NSA Size #R-5 (limestone)	VQ	Ton	23		$
30101	Aggregate base, grading **PA 2A**, compaction method B	VQ	Ton	92		$
30115	Aggregate surface course, Type **DSA Limestone**, compaction method B	VQ	Ton	207		$
30318	Road reconditioning, roadbed, compaction method B	CQ	Mile	0.1		$
60264	**112" span, 75" rise**, aluminized, type 2, corrugated metal pipe arch, **0.138 inch** thickness	CQ	Foot	40		$
62503	Seeding, hydraulic or dry method (Lump Sum)	LSQ	All	1		$
62901	Erosion seeding matting for seeding establishment	AQ	Square Yard	165		$
63306	Object Markers, Type 3	CQ	Each	4		$
63501	Temporary Traffic Control (Lump Sum)	CQ	All	1		$
				TOTAL		$

General Notes

– **Prior to any earth disturbing activities, contractor shall call the Pennsylvania One Call System (800-242-1776) and all Oil & Gas Operators in the work area to determine locations of any underground utility lines.**

– **Design drawings are on a separate Adobe Acrobat document.**

– All limestone material should have a CaCO3 content of 83%.

– Contractor is responsible for maintenance of all Forest Service roads over which pit run or commercial stone material is hauled. Roads shall be bladed or shaped to restore travel way to the condition found prior to haul.

– Culvert cleaning and repair will be considered incidental to road reconditioning.

– **Contractor shall install "ROAD CLOSED, TRUCK TRAFFIC and ROAD CONSTRUCTION AHEAD" signs on all roads worked on in this project. Signs shall conform to the Manual on Uniform Traffic Control Devices (MUTCD). Contractor's sign plan must be approved by Forest Service prior to work. Signs will be covered on weekends, holidays and any days when contractor is not working**.

– Roads shall be completed in such a manner that water shall not pond on roadbed or in ditch lines.

– All removed corrugated metal pipe culverts shall be hauled off Federal lands and become the property of the contractor, unless otherwise indicated for salvage. Steel pipe casings shall be returned to the Sheffield Work Center unless otherwise directed by the Engineer.

– Contouring, topsoil re-spreading, seeding and mulching of disturbed areas as determined by the Forest Service is required.

– DSA limestone shall be shipped at optimum moisture content not exceeding 15%. Limestone loads that fail field test parameters will be rejected.

– When replacing culverts in live streams, contractor shall install silt fence and straw bales at approaches to live stream crossings to eliminate sediment in the stream course. When culverts are located on High Quality and Exceptional Value streams, contractor shall install compost filter socks. Any sediment collected will be removed and ground will be stabilized with seed and mulch. Dewatering pumps will be used to redirect water out of the stream course at the time of stream crossing installation. Silt fence and straw bales will be removed only after vegetation is clearly re-established as determined by the Engineer.

– Roadway sod encountered during road reconditioning operations will be spread and leveled outside the road template avoiding piles. Natural terrain depressions and openings are the preferred waste locations. Seeding and mulching may be required to supplement natural revegetation.

– Vegetation cut down during roadside brushing will be pulled beyond the clearing limits and the toe of any roadway template construction. Mixing of soil and cut vegetation shall be avoided. All material will be scattered and lopped within 3' of the ground.

– Aggregate stockpiled for culvert replacement will be located on the existing road surface to assure maximum utilization of the material and eliminate disturbance of existing vegetated areas.

– **Contractor shall install silt fence and straw bales at live stream crossings to eliminate sediment in the stream course. Any sediment collected will be removed and stabilized with seed and mulch.**

Road Log - Work Descriptions

FR 137 Fire Road
Service Level I (Old Level C)

Locations of buried utilities along this road are unknown. There are no markers for buried utilities. Modifications to this plan may be necessary when the buried utilities are located. Snyder Brothers, Eric Leydic (814) 598-7025; Tom Definbaugh, (814) 362-7373.

Station	Road Log/**Work Description**
0+00	Intersection with SR 321 **Coordinates: Latitude 41º 52' 42.5" N (41.87848)** **Longitude 78º 50' 54.4" W (-78.84845)**
43+25	Overhead electric line
51+40	Overhead electric line
100+15	FR 452 left
112+35	FR 173 right
115+15	FR 137F left gated
123+50 – 459+85	Existing limestone surfacing
155+40	18" x 32' CMP (98)
156+45 – 163+45	**Recondition roadway to 15' subgrade width, see TYPICAL RECONDITION SECTION**
156+45 – 163+45	**Apply 4" compacted DSA limestone (202 tons)**
158+75	18" x 30' CMP (98), **place 3 tons riprap at outlet**
159+45	**Remove 48" x 32" x 28' CMPA, install 112" x 75" x 40' CMPA, unnamed tributary to Shingle Mill. Apply 92 tons PA 2A as road base. See Design Drawings (in separate document) for installation and stream simulation details.** **Coordinates: Latitude 41º 54' 29.7" N (41.90826)** **Longitude 78º 49' 31.7" W (-78.82548)**
160+85	Campsite right, drive 10' x 40', pad 22' x 32' limestone surfaced
161+85	18" x 30' CMP (98) drainage
163+45	**End road reconditioning and DSA limestone**
163+45	Parking left 16' x 40'
164+30	18" x 36' CMP (98) drainage
206+20	FR 271 left
223+65	Sugar Run Bridge (4 delineators and guide rail)
319+50-320+90	Parking lot left (137H)
321+55-323+95	Parking lot right (137G)
459+85	Edge of State Route 346

Roadbed Details & Drawings

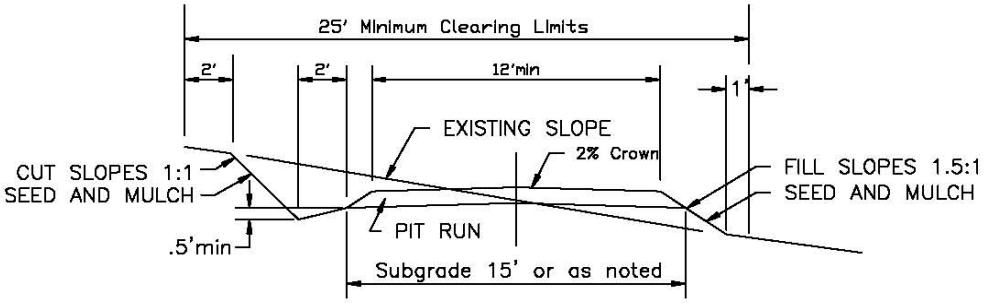

TYPICAL CONSTRUCTION SECTION

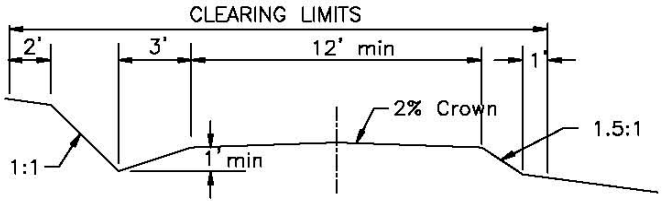

TYPICAL RECONDITION SECTION

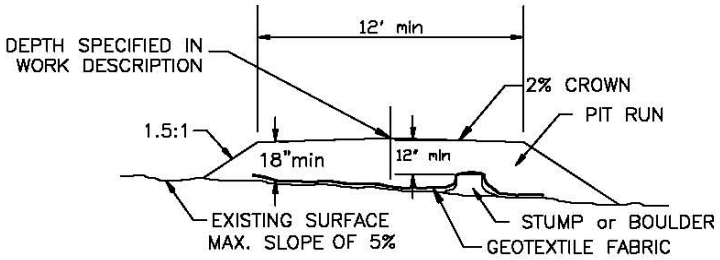

TYPICAL FABRIC SECTION W/O TEMPLATE

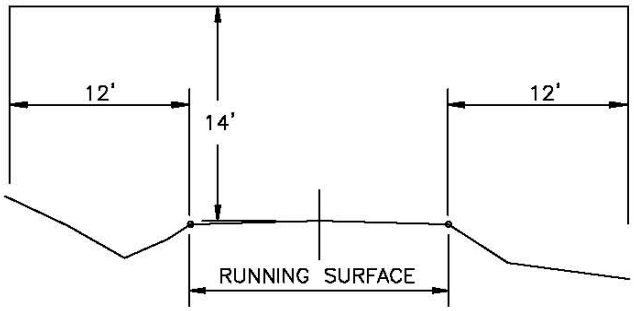

ROADSIDE BRUSHING DETAIL

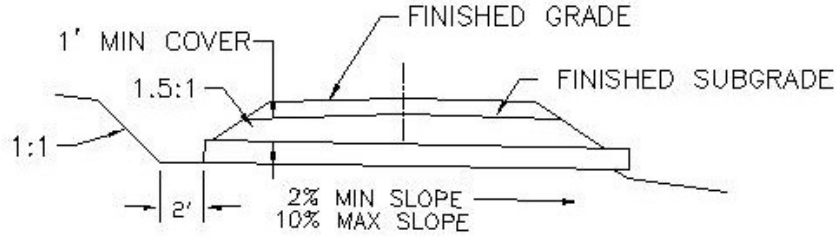

CULVERT SECTION

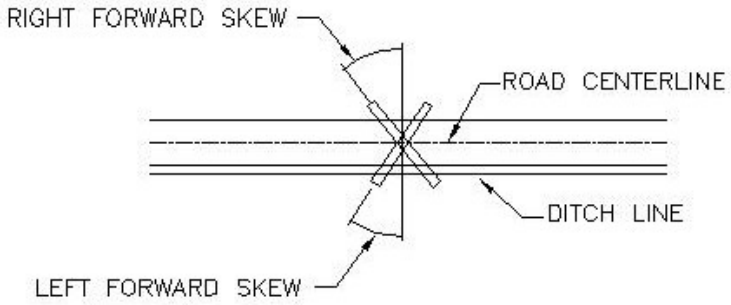

SKEW DETAIL

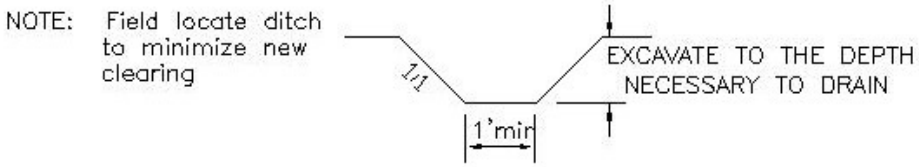

OUTLET/LEAD OFF DITCH SECTION

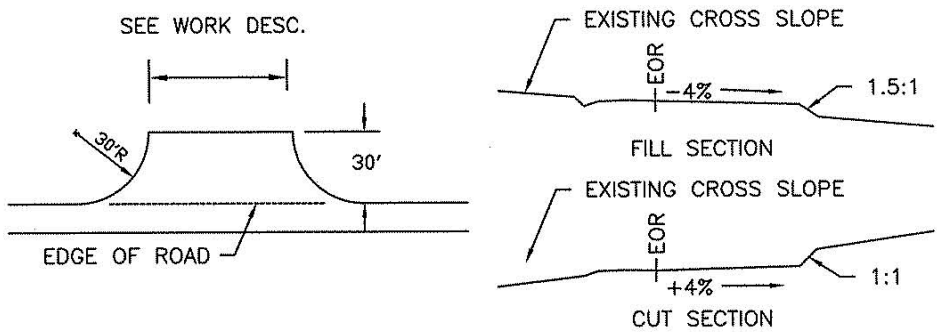

PARKING LOT DETAIL

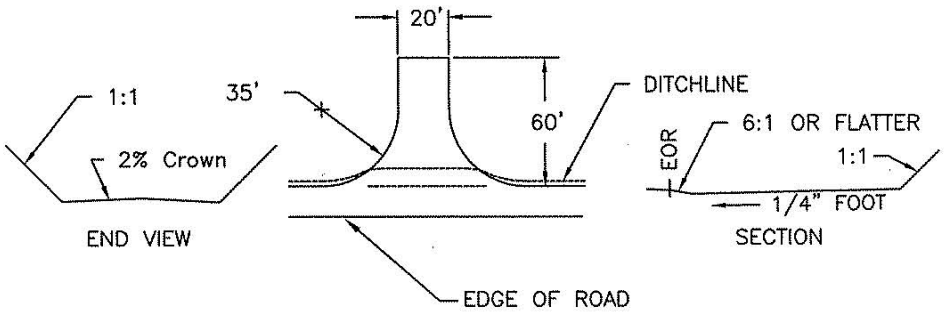

TURNAROUND DETAIL

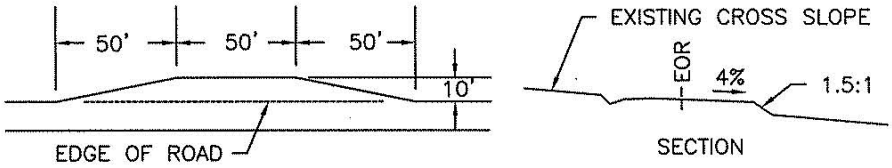

TURNOUT DETAIL

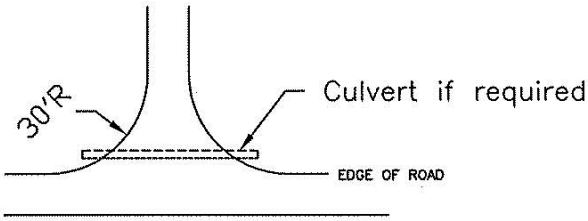

INTERSECTION DETAIL

Specifications for Specified Roads

Specifications Description 11
Preface 11
101 - Terms, Format, and Definitions 12
102 - Bid, Award, and Execution of Contract 15
103 - Scope of Work 16
104 - Control of Work 17
105 - Control of Material 18
106 - Acceptance of Work 19
107 - Legal Relations and Responsibility to the Public 20
108 - Prosecution and Progress 22
109 - Measurement and Payment 23
151 - Mobilization 24
153 - Contractor Quality Control 25
155 - Schedules for Construction Contracts 26
SPS 156 – Public Traffic 27
157 - Soil Erosion Control 29
201 – Clearing and Grubbing 30
203 - Removal of Structures and Obstructions 31
204 - Excavation and Embankment 32
209 - Structure Excavation and Backfill 46
301 - Untreated Aggregate Courses 48
303 - Road Reconditioning 51
602 - Culverts and Drains 54
607 - Cleaning, Reconditioning, and Repairing Existing Drainage Structures 55
625 - Turf Establishment 56
633 - Permanent Traffic Control 59
635 – Temporary Traffic Control 60
648 – Streambed Simulation 61
SPS 703 - Aggregate 66
704 - Soil 69
705 - Rock 70
718 - Traffic Signing and Marking Material 71

Specifications Description

The following specifications will be used for this contract:

Standard Specifications for Construction of Roads and Bridges on Federal Highway Projects – FP-03 U.S. Customary Units. FP-03 is available on the internet at the following site: http://flh.fhwa.dot.gov/resources/pse/specs/

Supplemental Specifications – The specifications identified in this contract were prepared by the Forest Service and are a supplement to or change the FHWA specifications.

Special Project Specifications – Are specifications prepared on the Allegheny National Forest and pertain to Pennsylvania Department of Transportation nomenclature. These are designated SPS.

Preface

Preface_wo_03_15_2004_m

Delete all but the first paragraph and add the following:

The Forest Service, US Department of Agriculture has adopted FP-03 for construction of National Forest System Roads.

101 - Terms, Format, and Definitions

101.00_nat_us_07_25_2005

101.01_nat_us_01_22_2009

101.01 Meaning of Terms

Delete all references to the TAR (Transportation Acquisition Regulations) in the specifications.

101.03_nat_us_06_16_2006

101.03 Abbreviations.

Add the following to (a) Acronyms:

AFPA	American Forest and Paper Association
MSHA	Mine Safety and Health Administration
NIST	National Institute of Standards and Technology
NESC	National Electrical Safety Code
WCLIB	West Coast Lumber Inspection Bureau

.

Add the following to (b) SI symbols:

mp	Milepost
ppm	Part Per Million

101.04_nat_us_03_29_2007

101.04 Definitions.

Delete the following definitions and substitute the following:

Bid Schedule--The Schedule of Items.

Bridge--No definition.

Contractor--The individual or legal entity contracting with the Government for performance of prescribed work. In a timber sale contract, the contractor is the "purchaser".

Culvert--No definition.

Right-of-Way--A general term denoting (1) the privilege to pass over land in some particular line (including easement, lease, permit, or license to occupy, use, or traverse public or private

lands), or (2) Real property necessary for the project, including roadway, buffer areas, access, and drainage areas.

Add the following:

Adjustment in Contract Price--"Equitable adjustment," as used in the Federal Acquisition Regulations, or "construction cost adjustment," as used in the Timber Sale Contract, as applicable.

Change--"Change" means "change order" as used in the Federal Acquisition Regulations, or "design change" as used in the Timber Sale Contract.

Design Quantity--"Design quantity" is a Forest Service method of measurement from the FS-96 *Forest Service Specifications for the Construction of Roads and Bridges.* Under these FP specifications this term is replaced by the term "Contract Quantities".

Forest Service--The United States of America, acting through the Forest Service, U.S. Department of Agriculture.

Neat Line--A line defining the proposed or specified limits of an excavation or structure.

Pioneer Road--Temporary construction access built along the route of the project.

Purchaser--The individual, partnership, joint venture, or corporation contracting with the Government under the terms of a Timber Sale Contract and acting independently or through agents, employees, or subcontractors.

Protected Streamcourse--A drainage shown on the plans or timber sale area map that requires designated mitigation measures.

Road Order--An order affecting and controlling traffic on roads under Forest Service jurisdiction. Road Orders are issued by a designated Forest Officer under the authorities of 36 CFR, part 260.

Schedule of Items--A schedule in the contract that contains a listing and description of construction items, quantities, units of measure, unit price, and amount.

Utilization Standards--The minimum size and percent soundness of trees described in the specifications to determine merchantable timber.

Add Figure 101-1—Illustration of road structure terms:

Figure 101-1—Illustration of road structure terms.

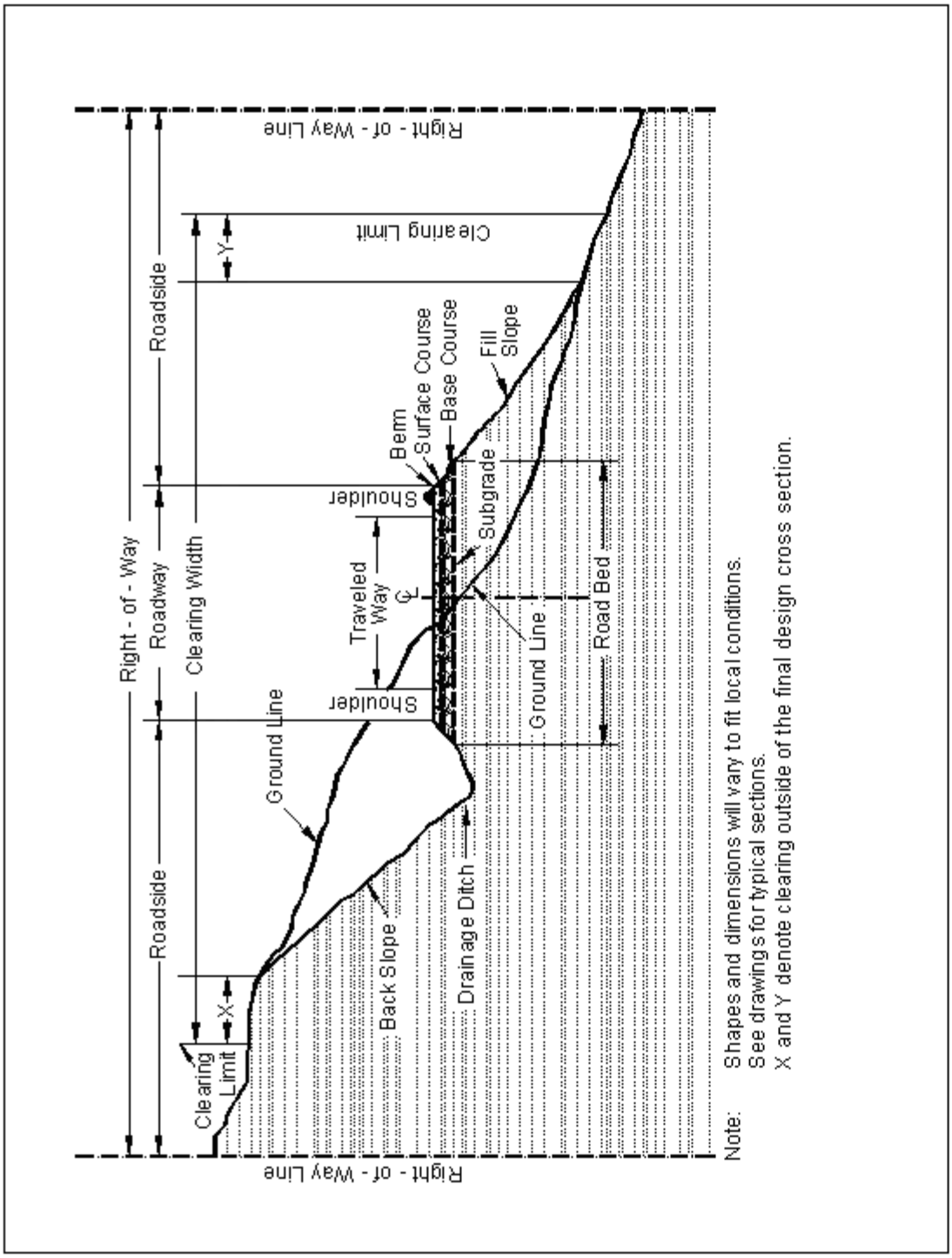

102 - Bid, Award, and Execution of Contract

102.00_nat_us_02_16_2005

102 Bid, Award, and Execution of Contract

Delete Section 102 in its entirety.

103 - Scope of Work

103.00_nat_us_02_16_2005

Deletions

Delete all but subsection 103.01 Intent of Contract.

104 - Control of Work

104.00_nat_us_06_16_2006

Deletions

Delete Sections 104.01, 104.02, and 104.04.

104.06_nat_us_02_17_2005

Add the following subsection:

104.06 Use of Roads by Contractor

The Contractor is authorized to use roads under the jurisdiction of the Forest Service for all activities necessary to complete this contract, subject to the limitations and authorizations designated in the Road Order(s) or described in the contract, when such use will not damage the roads or national forest resources, and when traffic can be accommodated safely.

105 - Control of Material

105.02_nat_us_01_18_2007

105.02 Material Sources.

105.02(a) Government-provided sources.

Add the following:

Comply with the requirements of 30 CFR 56, subparts B and H. Use all suitable material for aggregate regardless of size unless otherwise designated. When required, re-establish vegetation in disturbed areas according to section 625.

105.05_nat_us_05_12_2004

105.05 Use of Material Found in the Work.

Delete 105.05 (a) and (b) and the last sentence of the second paragraph and substitute the following:

Materials produced or processed from Government lands in excess of the quantities required for performance of this contract are the property of the Government. The Government is not obligated to make reimbursement for the cost of producing these materials.

106 - Acceptance of Work

106.07_nat_us_05_11_2004

106.07 Delete

Delete subsection 106.07.

107 - Legal Relations and Responsibility to the Public

107.05_nat_us_05_11_2004

107.05 Responsibility for Damage Claims.

Delete the entire subsection.

107.06_nat_us_06_16_2006

107.06 Contractor's Responsibility for Work.

Delete the following from the first paragraph.

"except as provided in Subsection 106.07".

107.09_nat_us_06_16_2006

107.09 Legal Relationship of the Parties.

Delete the entire subsection.

107.10_nat_us_06_16_2006

107.10 Environmental Protection.

Add the following:

Design and locate equipment repair shops, stationary refueling sites, or other facilities to minimize the potential and impacts of hazardous material spills on Government land.

Before beginning any work, submit a Hazardous Spill Plan. List actions to be taken in the event of a spill. Incorporate preventive measures to be taken, such as the location of mobile refueling facilities, storage and handling of hazardous materials, and similar information. Immediately notify the CO of all hazardous material spills. Provide a written narrative report form no later than 24 hours after the initial report and include the following:

- Description of the item spilled (including identity, quantity, manifest number, and other identifying information).
- Whether amount spilled is EPA or state reportable, and if so whether it was reported, and to whom.
- Exact time and location of spill including a description of the area involved.
- Containment procedures.
- Summary of any communications the Contractor had with news media, Federal, state and local regulatory agencies and officials, or Forest Service officials.
- Description of clean-up procedures employed or to be employed at the site including final disposition and disposal location of spill residue.

When available provide copies of all spill related clean up and closure documentation and correspondence from regulatory agencies.

The Contractor is solely responsible for all spills or leaks that occur during the performance of this contract. Clean up spills or leaks to the satisfaction of the CO and in a manner that complies with Federal, state, and local laws and regulations.

108 - Prosecution and Progress

108.00_nat_us_02_16_2005

108 Delete.

Delete Section 108 in its entirety.

109 - Measurement and Payment

109.00_nat_us_02_17_2005

109 Deletions

Delete the following entire subsections:

109.06 Pricing of Adjustments.

109.07 Eliminated Work.

109.08 Progress Payments.

109.09 Final Payment.

109.02_nat_us_06_16_2006

109.02 Measurement Terms and Definitions.

(b) Contract quantity.

Add the following:

Contract quantities will be adjusted only when there are errors in the original design of 15% or more.

Change the following:

"(b) Cubic yard" to "(c) Cubic yard".

Add the following definition:

(p) Thousand Board Feet (Mbf). 1,000 board feet based on nominal widths, thickness, and extreme usable length of each piece of lumber or timber actually incorporated in the job. For glued laminated timber, 1,000 board feet based on actual width, thickness, and length of each piece actually incorporated in the job.

151 - Mobilization

151.03_nat_us_08_05_2005

151.03 Payment

Delete the entire subsection and add the following:

151.03 Payment

Mobilization is considered an indirect cost of this contract and will not be compensated as a separate work item.

153 - Contractor Quality Control

153.02_nat_us_02_17_2005

153.02 Contractor Quality Control Plan.

Add the following:

Submit written proposals for approval of alternate AASHTO or State approved test methods. Alternate methods may be allowed based on documented equivalence to the specified method.

153.04_nat_us_10_24_2007

153.04 Records.

Delete all but the first sentence

155 - Schedules for Construction Contracts

155.00_nat_us_05_11_2004

155 Delete.

Delete Section 155 in its entirety.

SPS 156 – Public Traffic

Delete Section 156 in its entirety and replace with the following:

Section 156.—PUBLIC TRAFFIC

Description

156.01 This work consists of controlling and protecting public traffic adjacent to and within the project.

Material

156.02 Conform to the "Manual on Uniform Traffic Control Devices" (MUTCD) and applicable Subsections within the following Sections:

Permanent Traffic Control	633
Temporary Traffic Control	635
Traffic Signing and Marking Materials	718

156.03 Roads to be Constructed. Unless otherwise indicated within the plans or specifications, keep existing roads open to all traffic during road improvement work, and maintain them in a condition that will adequately accommodate traffic. Perform no work that interferes or conflicts with traffic or existing access to the roadway surface until a plan for the satisfactory handling of traffic has been approved by the CO.

Specific requirements for temporary closures, detours, part-width construction, and access to adjacent or intersecting facilities will be indicated within the plans or specifications. Post construction signs and traffic control devices in conformance with the MUTCD and the project requirements. Do not proceed with work on the project until all required signs and barricades are in place and approved by the CO.

Before shutting down any operations, take all necessary precautions to prevent damage to the project, such as temporary detours, approaches, crossings, or intersections; and provide for normal drainage and minimization of erosion. Leave all travel ways in a condition suitable for traffic.

When indicated on the plans or described in the specifications, road segments may be closed to all traffic during the period(s) when construction is in progress. If any of the listed roads are to be closed during construction operations, give the CO at least 14 days advance notice.

156.04 Maintaining Roadways during Work. Do not construct detours outside of the clearing limits or use alternate route detours without the approval of the CO.

Unless otherwise indicated within the plans or specifications, keep existing roads open to all traffic during road improvement work, and maintain them in a condition that will adequately accommodate traffic. Perform no work that interferes or conflicts with traffic or existing access to the roadway surface until a “Travel Management Safety Plan” for the satisfactory handling of traffic has been approved by the CO. Submit the plan to the CO for approval at least 14 days prior to starting work. The plan shall address how the Contractor intends to perform hauling operations to the site while allowing for public traffic on the same access road.

157 - Soil Erosion Control

157.03_nat_us_02_24_2005

157.03 General

Delete the entire subsection and replace with the following:

Prior to the start of construction, submit a written plan that provides permanent and temporary erosion control measures to minimize erosion and sedimentation during and after construction. Do not begin work until the necessary controls for that particular phase of work have been implemented. Do not modify the type, size, or location of any control. An alternate erosion control plan with all necessary permits may be submitted 30 days before intended use.

Incorporate all permanent erosion control features into the project at the earliest practicable time, as outlined in the approved plan.

When erosion control measures are not functioning as intended, immediately take corrective action.

157.03_0510_us_01_20_2005

157.03 General.

Add to the third paragraph:

Upon completion of construction at the site, all temporary dewatering materials and equipment are to be removed from Government property.

157.08 Water Crossings.

Add the following:

At any channel crossing where there is running water dewater by rerouting water flow around the site before and during excavation and embankment operations.

201 – Clearing and Grubbing

201.00_nat_us_08_05_2009

201.01 Description.

Replace with the following

This work consists of clearing and grubbing within clearing limits and other designated areas.

201.02 Material.

Delete**:** Tree wound dressing material reference.

201.03 General.

Delete the last sentence.

201.04 Clearing.

Delete subsection (d) and replace with the following:

> (d) Do not cut vegetation less than 3 feet tall and less than 3 inches in diameter, that is within the clearing limits but beyond the roadway and not in a decking area, and that does not interfere with sight distance along the road.

Add the following:

> (e) Trim branches of remaining trees or shrubs to give a clear height of 14 feet above the roadbed unless otherwise indicated. Trim tree limbs as near flush with the trunk as practicable.

203 - Removal of Structures and Obstructions

203.01_nat_us_02_25_2005

203.01 Description.

Delete and replace with the following:

This work consists of disposing of construction slash and debris, salvaging, removing, and disposing of buildings, fences, structures, pavements, culverts, utilities, curbs, sidewalks, and other obstructions.

203.05_nat_us_02_24_2005

203.05 Disposing of Material.

Add the following:

(e): Scattering. Scatter pieces of wood less than 3 inches in diameter and 3 feet in length within the clearing limits. Do not place construction slash in lakes, meadows, streams, or streambeds. Immediately remove construction slash that interferes with drainage structures.

203.08_nat_us_02_24_2005

203.08 Payment

Add the following:

Disposal of construction slash will be compensated under the designated pay item in Section 201.

204 - Excavation and Embankment

204.00_nat_us_03_26_2009

Replace Section 204 in its entirety with the following:

Description

204.01 This work consists of excavating material and constructing embankments. This includes furnishing, hauling, stockpiling, placing, disposing, sloping, shaping, compacting, and finishing earthen and rocky material.

204.02 Definitions.

(a) Excavation. Excavation consists of the following:

(1) Roadway excavation. All material excavated from within the right-of-way or easement areas, except subexcavation covered in (2) below and structure excavation covered in Sections 208 and 209. Roadway excavation includes all material encountered regardless of its nature or characteristics.

(2) Subexcavation. Material excavated from below subgrade elevation in cut sections or from below the original groundline in embankment sections. Subexcavation does not include the work required by Subsections 204.05, 204.06(b), and 204.06(c).

(3) Borrow excavation. Material used for embankment construction that is obtained from outside the roadway prism. Borrow excavation includes unclassified borrow, select borrow, and select topping.

(b) Embankment construction. Embankment construction consists of placing and compacting roadway or borrow excavation. This work includes:

(1) Preparing foundation for embankment;
(2) Constructing roadway embankments;
(3) Benching for side-hill embankments;
(4) Constructing dikes, ramps, mounds, and berms; and
(5) Backfilling subexcavated areas, holes, pits, and other depressions.

(c) Conserved topsoil. Excavated material conserved from the roadway excavation and embankment foundation areas that is suitable for growth of grass, cover crops, or native vegetation.

(d) Waste. Excess and unsuitable roadway excavation and subexcavation that cannot be used.

Material

204.03 Conform to the following Subsections:

Backfill material	704.03
Select borrow	704.07
Select topping	704.08
Topping	704.05
Unclassified borrow	704.06
Water	725.01

Construction Requirements

204.04 Preparation for Roadway Excavation and Embankment Construction. Clear the area of vegetation and obstructions according to Sections 201 and 203.

204.05 Reserved.

204.06 Roadway Excavation. Excavate as follows:

(a) General. Do not disturb material and vegetation outside the construction limits. Incorporate only suitable material into embankments. Replace any shortage of suitable material caused by premature disposal of roadway excavation. Dispose of unsuitable or excess excavation material according to Subsection 204.14.

At the end of each day's operations, shape to drain and compact the work area to a uniform cross-section. Eliminate all ruts and low spots that could hold water.

Retrieve material deposited outside of the clearing limits as directed by the CO. Place unsuitable material in designated areas.

(b) Rock cuts. Blast rock according to Section 205. Excavate rock cuts to 6 inches below subgrade within the roadbed limits. Backfill to subgrade with topping or with other suitable material. Compact the material according to Subsection 204.11

(c) Earth cuts. Scarify earth cuts to 6 inches below subgrade within the roadbed limits. Compact the scarified material according to Subsection 204.11.

(d) Pioneer Roads. Road pioneering, slash disposal, and grubbing of stumps may proceed concurrently with excavation. Conduct excavation and placement operations so material to be treated under Section 201 will not be incorporated into the roadway unless specified in the slash treatment method. Maintain drainage during pioneering operations.

Remove snow and ice in advance of the work and deposit beyond the roadway limits in a manner that will not waste material or generate sediment. Do not incorporate snow and ice into embankments. Place snow or ice in a manner to prevent resource damage.

204.07 Subexcavation. Excavate material to the limits designated by the CO. Take cross-sections according to Section 152. Prevent unsuitable material from becoming mixed with the backfill. Dispose of unsuitable material according to Subsection 204.14. Backfill the

subexcavation with topping, or other suitable material. Compact the material according to Subsection 204.11.

204.08 Borrow Excavation. Use all suitable roadway excavation in embankment construction. Do not use borrow excavation when it results in excess roadway excavation. Deduct excess borrow excavation from the appropriate borrow excavation quantity.

Obtain borrow source acceptance according to Subsection 105.02. Develop and restore borrow sources according to Subsection 105.03. Do not excavate beyond the established limits. When applicable, shape the borrow source to permit accurate measurements when excavation is complete.

204.09 Preparing Foundation for Embankment Construction. Prepare foundation for embankment construction as follows:

(a) Embankment less than 4 feet high over natural ground. When designated, remove topsoil and break up the ground surface to a minimum depth of 6 inches by plowing or scarifying. Compact the ground surface according to Subsection 204.11.

(b) Embankments over an existing asphalt, concrete, or gravel road surface. Scarify gravel roads to a minimum depth of 6 inches. Scarify or pulverize asphalt and concrete roads to 6 inches below the pavement. Reduce all particles to a maximum size of 6 inches and produce a uniform material. Compact the surface according to Subsection 204.11.

(c) Embankment across ground not capable of supporting equipment. Dump successive loads of embankment material in a uniformly distributed layer to construct the lower portion of the embankment. Limit the layer thickness to the minimum depth necessary to support the equipment.

(d) Embankment on an existing slope steeper than 1V:3H. Cut horizontal benches in the existing slope to a sufficient width to accommodate placement and compaction operations and equipment. Bench the slope as the embankment is placed and compacted in layers. Begin each bench at the intersection of the original ground and the vertical cut of the previous bench.

204.10 Embankment Construction. Incorporate only suitable roadway excavation material into the embankment. When the supply of suitable roadway excavation is exhausted, furnish unclassified borrow to complete the embankment. Obtain written approval before beginning construction of embankments over 6 feet high at subgrade centerline. Construct embankments as follows:

(a) General. At the end of each day's operations, shape to drain and compact the embankment surface to a uniform cross-section. Eliminate all ruts and low spots that could hold water.

During all stages of construction, route and distribute hauling and leveling equipment over the width and length of each layer of material.

Compact embankment side slopes flatter than 1V:1.75H with a tamping type roller or by walking with a dozer. For slopes 1V:1.75H or steeper, compact the slopes as construction of the embankment progresses.

Where placing embankment on one side of abutments, wing walls, piers, or culvert headwalls, compact the material using methods that prevent excessive pressure against the structure.

Where placing embankment material on both sides of a concrete wall or box structure, conduct operations so compacted embankment material is at the same elevation on both sides of the structure.

Where structural pilings are placed in embankment locations, limit the maximum particle size to 4 inches.

(b) Embankment within the roadway prism. Place embankment material in horizontal layers not exceeding 12 inches in compacted thickness. Incorporate oversize boulders or rock fragments into the 12-inch layers by reducing them in size or placing them individually as required by (c) below. Compact each layer according to Subsection 204.11 before placing the next layer.

Material composed predominately of boulders or rock fragments too large for 12-inch layers may be placed in layers up to 24 inches thick. Incorporate oversize boulders or rock fragments into the 24-inch layer by reducing them in size or placing them individually according to (c) below. Place sufficient earth and smaller rocks to fill the voids. Compact each layer according to Subsection 204.11 before placing the next layer.

(c) Individual rock fragments and boulders. Place individual rock fragments and boulders greater than 24 inches in diameter as follows:

(1) Reduce rock to less than 48 inches in the largest dimension.
(2) Distribute rock within the embankment to prevent nesting.
(3) Place layers of embankment material around each rock to a depth not greater than that permitted by (b) above. Fill all the voids between rocks.
(4) Compact each layer according to Subsection 204.11 before placing the next layer.

(d) Embankment outside of roadway prism. Where placing embankment outside the staked roadway prism, place material in horizontal layers not exceeding 24 inches in compacted thickness. Compact each layer according to Subsection 204.11.

204.11 Compaction. Compact the embankment using one of the following methods as specified:

(a) <u>Compaction A.</u> Use AASHTO T 27 to determine the amount of material retained on a Number 4 sieve. If there is more than 80 percent retained on the No. 4 sieve use procedure (1). If there is 50 to 80 percent retained on the No. 4 sieve use procedure (2). If there is less than 50 percent retained on the No. 4 sieve use procedure (3).

(1) Adjust the moisture content to a level suitable for compaction. Fill the interstices around rock with earth or other fine material as practical. Use compression-type rollers at speeds less than 6feet per second and vibratory rollers at speeds less than 3 feet per second. Compact each layer of material full width with one of the following and until there is no visible evidence of further consolidation.

(a) Four roller passes of a vibratory roller having a minimum dynamic force of 40,000 pounds impact per vibration and a minimum frequency of 1000 vibrations per minute.
(b) Eight roller passes of a 20-ton compression-type roller.
(c) Eight roller passes of a vibratory roller having a minimum dynamic force of 30,000 pounds impact per vibration and a minimum frequency of 1000 vibrations per minute.

Increase the compactive effort for layers deeper than 12 inches as follows:

- For each additional 6 inches or fraction thereof, increase the number of roller passes in (a) above by four passes.
- For each additional 6 inches or fraction thereof, increase the number of roller passes in (b) and (c) above, by eight passes.

(2) Use AASHTO T 99 to determine the optimum moisture content of the portion of the material passing a No. 4 sieve. Multiply this number by the percentage of material passing a No. 4 sieve, and add 2 percent to determine the optimum moisture content of the material. Adjust the moisture content of material classified A-1 through A-5 to a moisture content suitable for compaction. Adjust the moisture content of material classified A-6 and A-7 to within 2 percent of the optimum moisture content.

Use compression-type rollers at speeds less than 6 feet per second and vibratory rollers at speeds less than 3 feet per second. Compact each layer of material full width according to (1) above.

(3) Classify the material according to AASHTO M 145. For material classified A-1 or A-2-4, determine the maximum density according to AASHTO T 180, method D. For other material classifications, determine the optimum moisture content and maximum density according to AASHTO T 99, method C.

Adjust the moisture content of material classified A-1 through A-5 to a moisture content suitable for compaction. Adjust the moisture content of material classified A-6 and A-7 to within 2 percent of the optimum moisture content.

Use compression-type or vibratory rollers. Compact each layer of material full width to at least 95 percent of the maximum density. Determine the in-place density and moisture content according to AASHTO T 310 or other approved test procedures. When required, use AASHTO T 224 to correct for coarse particles.

(b) **<u>Compaction B.</u>** Place material by end dumping to the minimum depth needed for operation of spreading equipment. Adjust the moisture content of the material to obtain a mass that will not visibly deflect under the load of the hauling and spreading equipment. Operate compaction equipment over the full width of each layer until there is no visible evidence of further consolidation or, if when a sheepsfoot roller is used, the roller "walks out" of the layer. Make at least three complete passes.

(c) **<u>Compaction C.</u>** Place material by end dumping to the minimum depth needed for operation of spreading equipment. Level and smooth each embankment layer before placing

the next layers. Operate hauling and spreading equipment uniformly over the full width of each layer. Construct a solid embankment with adequate compaction by working smaller rock and fines in with the larger rocks to fill the voids, and by operating hauling and spreading equipment uniformly over the full width of each layer as the embankment is constructed.

204.12 Ditches. Slope, grade, and shape ditches. Remove all projecting roots, stumps, rock, or similar matter. Maintain all ditches in an open condition and free from leaves, sticks, and other debris.

Form furrow ditches by plowing or using other acceptable methods to produce a continuous furrow. Place all excavated material on the downhill side so the bottom of the ditch is approximately 18 inches below the crest of the loose material. Clean the ditch using a hand shovel, ditcher, or other suitable method. Shape to provide drainage without overflow.

204.13 Sloping, Shaping, and Finishing. Complete slopes, ditches, culverts, riprap, and other underground minor structures before placing aggregate courses. Slope, shape, and finish as follows:

(a) Sloping. Leave all earth slopes with uniform roughened surfaces, except as described in (b) below, with no noticeable break as viewed from the road. Except in solid rock, round tops and bottoms of all slopes including the slopes of drainage ditches. Round material overlaying solid rock to the extent practical. Scale all rock slopes. Slope rounding is not required on tolerance class D though M roads.

If a slide or slipout occurs on a cut or embankment slope, remove or replace the material, and repair or restore all damage to the work. Bench or key the slope to stabilize the slide. Reshape the cut or embankment slope to an acceptable condition.

(b) Stepped slopes. Where required by the contract, construct steps on slopes of 1⅓V:1H to 1V:2H. Construct the steps approximately 18 inches high. Blend the steps into natural ground at the end of the cut. If the slope contains nonrippable rock outcrops, blend steps into the rock. Remove loose material found in transitional area. Except for removing large rocks that may fall, scaling stepped slopes is not required.

(c) Shaping. Shape the subgrade to a smooth surface and to the cross-section required. Shape slopes to gradually transition into slope adjustments without noticeable breaks. At the ends of cuts and at intersections of cuts and embankments, adjust slopes in the horizontal and vertical planes to blend into each other or into the natural ground.

(d) Finishing. Finish the roadbed to be smooth and uniform, and shaped to conform to the typical sections. Remove unsuitable material from the roadbed and replace it with suitable material. Finish roadbeds to the tolerance class shown in table 204-2.Ensure that the subgrade is visibly moist during shaping and dressing. Scarify to 6 inches below the bottom of low sections, holes, cracks, or depressions and bring back to grade with suitable material. Maintain proper ditch drainage.

For surfaced roads, remove all material larger than 6 inches from the top 6 inches of the roadbed.

For unsurfaced roads, use one of the following methods to finish the roadbed:

(1) **Method A**. Remove all material larger than 6 inches from the top 6 inches of the roadbed and replace with suitable material.
(2) **Method B**. Use a vibratory grid roller or approved equal with a minimum weight of 10 tons. Roll at least 5 full-width passes or until there is no visible evidence of further consolidation.
(3) **Method C**. For roads designated as Construction Tolerance Class K, L, or M, finish the roadbed by spreading the excavation. Eliminate rock berms.

204.14 Disposal of Unsuitable or Excess Material. Dispose of unsuitable or excess material at designated sites or legally off of the project.

When there is a pay item for waste, shape and compact the waste material in its final location. Do not mix clearing or other material not subject to payment with the waste material.

204.15 Acceptance. See Table 204-1 for sampling and testing requirements.

Material for embankment and conserved topsoil will be evaluated under Subsections 106.02 and 106.04.

Excavation and embankment construction will be evaluated under Subsections 106.02 and 106.04.

Clearing and removal of obstructions will be evaluated under Sections 201 and 203.

Measurement

204.16 Measure the Section 204 items listed in the bid schedule according to Subsection 109.02 and the following as applicable.

(a) Roadway excavation. Measure roadway excavation in its original position as follows:

(1) Include the following volumes in roadway excavation:
(a) Roadway prism excavation;
(b) Rock material excavated and removed from below subgrade in cut sections;
(c) Unsuitable material below subgrade and unsuitable material beneath embankment areas when a pay item for subexcavation is not shown in the bid schedule;
(d) Ditches, except furrow ditches measured under a separate bid item;
*(e*Topsoil;
(f) Borrow material used in the work when a pay item for borrow is not shown in the bid schedule;
(g) Loose scattered rocks removed and placed as required within the roadway;
(h) Conserved material taken from stockpiles and used in Section 204 work; and
(i) Slide and slipout material not attributable to the Contractor's method of operation.

(2) Do not include the following in roadway excavation:
(a) Overburden and other spoil material from borrow sources;
(b) Overbreakage from the backslope in rock excavation;
(c) Water or other liquid material;

(d) Material used for purposes other than required;
(e) Roadbed material scarified in place and not removed;
(f) Material excavated when stepping cut slopes;
(g) Material excavated when rounding cut slopes;
(h) Preparing foundations for embankment construction;
(i) Material excavated when benching for embankments;
(j) Slide or slipout material attributable to the Contractor's method of operation;
(k) Conserved material taken from stockpiles constructed at the option of the Contractor; and
(l) Material excavated outside the established slope limits.

(3) When both roadway excavation and embankment construction pay items are shown in the bid schedule, measure the following as roadway excavation only:
(a) Unsuitable material below subgrade in cuts and unsuitable material beneath embankment areas when a pay item for subexcavation is not shown in the bid schedule;
(b) Slide and slipout material not attributable to the Contractor's method of operations; and
(c) Drainage ditches, channel changes, and diversion ditches.

(b) Unclassified borrow, select borrow, and select topping. When measuring by the cubic yard measure in its original position. If borrow excavation is measured by the cubic yard in place, take initial cross-sections of the ground surface after stripping overburden. Upon completion of excavation and after the borrow source waste material is returned to the source, retake cross-sections before replacing the overburden.
Do not measure borrow excavation used in place of excess roadway excavation.

(c) Embankment construction. Measure embankment construction in its final position. Do not make deductions from the embankment construction quantity for the volume of minor structures.

(1) Include the following volumes in embankment construction:
(a) Roadway embankments;
(b) Material used to backfill subexcavated areas, holes, pits, and other depressions;
(c) Material used to restore obliterated roadbeds to original contours; and
(d) Material used for dikes, ramps, mounds, and berms.

(2) Do not include the following in embankment construction:
(a) Preparing foundations for embankment construction;
(b) Adjustments for subsidence or settlement of the embankment or of the foundation on which the embankment is placed; and
(c) Material used to round fill slopes.

(d) Rounding cut slopes. Measure rounding cut slopes horizontally along the centerline of the roadway if a pay item for slope rounding is included in the bid schedule. If a pay item for slope rounding is not included in the bid schedule slope rounding will be considered subsidiary to excavation.

(e) Waste. Measure waste by the cubic yard in its final position. Take initial cross-sections of the ground surface after stripping over burden. Upon completion of the waste placement, retake cross-sections before replacing overburden.

(f) Slope scaling. Measure slope scaling by the cubic yard in the hauling vehicle.

Payment

204.17 The accepted quantities will be paid at the contract price per unit of measurement for the Section 204 pay items listed in the bid schedule. Payment will be full compensation for the work prescribed in this Section. See Subsection 109.05.

Table 204-1
Sampling and Testing Requirements

Material or Product	Type of Acceptance (Subsection)	Characteristic	Category	Test Methods Specifications	Sampling Frequency	Point of Sampling	Split Sample	Reporting Time
Topping (704.05) & unclassified borrow (704.06)	Measured and tested for conformance (106.04)	Classification	—	AASHTO M 145	1 per soil type	Processed material before incorporating in work	Yes, when requested	Before using in work
		Moisture-density	—	AASHTO T 180, method D[1] or T 99, method C[1]	1 per soil type but not less than 1 per	"	"	"
		Compaction	—	AASHTO T 310 or other approved procedures	1 per 6000 yd^2 but not less than 1 per layer	In-place	—	Before placing next layer
Select borrow (704.07 & Select topping (704.08)	Measured and tested for conformance (106.04)	Classification	—	AASHTO M 145	1 per soil type but not less than 1 for each day of production	Processed material before incorporating	Yes, when requested	Before using in work
		Gradation	—	AASHTO T 27	"	"	"	"
		Liquid limit	—	AASHTO T 89	"	"	"	"
		Moisture-density	—	AASHTO T 180, method D[1] or T 99, method C[1]	1 per soil type but not less than 1 per	"	"	"
		Compaction	—	AASHTO T 310 or other approved procedures	1 per 6000 yd^2 but not less than 1 per layer	In-place	—	Before placing next layer

(1) Minimum of 5 points per proctor

Table 204-1 (continued)
Sampling and Testing Requirements

Material or Product	Type of Acceptance (Subsection)	Characteristic	Category	Test Methods Specifications	Sampling Frequency	Point of Sampling	Split Sample	Reporting Time
Earth embankment (204.11, Compaction A)	Measured and tested for conformance (106.04)	Classification	—	AASHTO M 145	1 per soil type	Source of Material	Yes, when requested	Before using in work
		Moisture-density	—	AASHTO T 180, method D[(1)] or T 99, method C[(1)]	1 per soil type but not less than 1 per 13,000 yd^3	"	"	"
		Compaction	—	AASHTO T 310 or other approved procedures	1 per 3500 yd^2 but not less than 1 per layer	In-place	—	Before placing next layer
Top of subgrade (204.11 Compaction A)	Measured and tested for conformance (106.04)	Compaction	—	AASHTO T 310 or other approved procedures	1 per 2500 yd^2	In-place	—	Before placing next layer

(1) Minimum of 5 points per proctor.

Table 204-2
Construction Tolerances

	Tolerance Class [a]												
	A	**B**	**C**	**D**	**E**	**F**	**G**	**H**	**I**	**J**	**K**	**L**	**M**
Roadbed width (ft)	+0.5	+0.5	+1.0	+1.0	+1.0	+1.0	+1.5	+1.0	+2.0	+2.0	+2.0	+2.0	+2.0
Subgrade elevation (ft)	±0.1	±0.2	±0.2	±0.5	±0.5	±1.0	±1.0	±1.5	±2.0	±3.0	±2.0	±3.0	(c)
Centerline alignment (ft)	±0.2	±0.2	±0.5	±0.5	±1.0	±1.0	±1.5	±1.5	±2.0	±3.0	±3.0	±5.0	(c)
Slopes, excavation, and embankment (% slope[b])	±3	±5	±5	±5	±5	±5	±10	±10	±10	±10	±20	±20	±20

(a) Maximum allowable deviation from construction stakes and drawings.
(b) Maximum allowable deviation from staked slope measured from slope stakes or hinge points.
(c) Unless otherwise shown the centerline alignment and subgrade elevation, as built, have no horizontal curves with a radius of less than 80 feet, and no vertical curves with a curve length of less than 80 feet when the algebraic difference in the grade change is less than 10 percent, or a curve length of less than 100 feet when the algebraic difference of the grade change is greater than or equal to 10 percent. The centerline grade is not to exceed 20 percent in 100 feet of length.

208 – Structure Excavation and Backfill for Selected Major Structures

208.02 Material.

Add the following:

Geotextile and Geocomposite Drain Material	714

208.04_nat_us_08_05_2009

208.04 General.

Replace the second sentence of the sixth paragraph with the following:

Dispose of excavated material in accordance with the plans, specifications, and as directed by the CO.

Add the following:

Stockpile the material as directed by the CO.

Add the following to the end of the second sentence of the third paragraph:

"... to the CO a minimum of 5 days prior to beginning excavation work."

Add the following to the end of the third sentence of the third paragraph:

"...to the CO a minimum of 15 days prior to installation."

208.06 Cofferdams.

Add the following:

Cofferdams may include sandbag dikes. The Contractor shall provide information relative to a source site for any fill material within the cofferdams, a construction method for the cofferdams, and a restoration method for the cofferdams to the CO 14 days prior to construction for review and approval. Dredging of channel material outside of the limits of riprap for use in cofferdams shall not be permitted.

208.08 Dewatering.

Add the following:

The contractor shall submit a dewatering plan to the CO a minimum of 15 days prior to commencement of the work. The plan shall include all means and methods for diverting the flow in the channel as required to construct the footings and reconstruct the channel. Outflow from diversion/dewatering shall not be discharged directly into the creek, but shall be discharged with best management practices for erosion control (refer to Special Contract Requirement 157).

208.09 Foundation Preparation.

Add the following:

The Contractor shall have the foundation subgrade approved by the CO prior to placement of the footings.

208.09(d) Unstable material below footing elevation

Add the following:

The foundation elevation is defined as the top of footings, for spread footing placement. Bottom of footing elevation is the resulting design elevation at the bottom of the footing. Boulders or irregular, fractured, or seamed rock is anticipated to preclude excavation to the bottom of footing elevations and these obstructions shall be removed and replaced with foundation fill. Foundation fill shall be placed with a minimum depth of 6” to provide a level bearing surface. Foundation fill required beyond the 1’-0” depth shown on the plans shall not be measured separately subject to Section 208.13 (below). The additional structure excavation for the 1’-0” depth foundation fill shall be to the same horizontal limits defined in Section 208.13(a) and shall be measured and included for payment in the associated pay item. Structure excavation below the 1’-0” foundation fill shall not be measured separately and shall be considered incidental to the work to the limits defined in Section 208.14.

208.10 Backfill.

Add the following:

Construct backfill equally on both sides of the structure as recommended by the manufacturer.

208.12 Acceptance.

Add the following:

Provide reports/results of structural backfill compaction tests to the CO.

208.13 Measurement.

Add the following paragraphs:

Foundation fill material required to replace additional excavation beyond the 1’-0” depth shown on the plans shall not be measured for payment unless the material required exceeds 15% of the contract quantity for foundation fill.

Material required for the approved dewatering method will not be measured for payment.

208.14 Payment.

Add the following paragraph:

All material, labor, equipment, and incidentals required to install and remove the approved diversion and dewatering system shall not be paid for separately, but shall be included in the following item:

20801 Structure excavation	*Cubic yard*

209 - Structure Excavation and Backfill

209.10_nat_us_10_23_2007

209.10 Backfill.

(a) General.

Add the following:

Replace any pipe that is distorted by more than 5 percent of nominal dimensions, or that is ruptured or broken.

Do not place or backfill pipe that meets any of the following conditions until the excavation and foundation have been approved in writing by the CO:

- Embankment height greater than 6 feet at subgrade centerline.
- Installation in a protected streamcourse.
- Round pipe with a diameter of 48 inches or greater.
- Pipe arches with a span of 50 inches or greater.
- Any box culvert of structure other than pipe culverts.

(b) Pipe culverts.

(1) Pipe culverts with compacted backfill.

Add the following:

Excavate an area on each side of the pipe as needed to effectively achieve compaction requirements. Backfill without damaging or displacing the pipe. Complete backfilling of the trench with suitable material.

209.11_nat_us_02_24_2005

209.11 Compacting.

Delete the subsection and add the following:

Compact backfill using designated compaction method A, B, or C:

Method A. Ensure that backfill density exceeds the density of the surrounding embankment.

Method B. Adjust the moisture content of the backfill material to a moisture content suitable for compaction. Compact each layer using appropriate compaction equipment until visual displacement ceases. For compaction under sections 252, 254, 255, 257, 258 and 262 compact with a vibratory steel wheeled roller with a mass of at least 8 tons.

Method C. Determine optimum moisture content and maximum density according to AASHTO T 99 method C. Adjust the moisture content of the backfill material to a moisture content suitable for compaction. Compact material placed in all layers to at least 95 percent of the maximum density. Determine the in place density and moisture content according to AASHTO T 310 or other approved test procedures.

Table 209-1 Sampling and Testing Requirements

Add the following:

(2) Compaction methods (A) and (B) do not require AASHTO T-99 or T-310 test methods for foundation fill.

301 - Untreated Aggregate Courses

301.00_nat_us_03_03_2005

301 Title Change.

Change the title to: **Section 301 Aggregate Courses**

301.01_nat_us_03_03_2005

301.01 Work.

Add the following:

Work includes producing aggregate by pit-run, grid rolling, screening, or crushing methods, or placing Government-furnished aggregate. Work may include additive mineral filler, or binder.

301.02_nat_us_05_16_2005

301.02 Material.

Add the following:

Bentonite	725.30
Calcium Chloride Flake	725.02
Lignon Sulfonate	725.20
Magnesium Chloride Brine or Calcium Chloride Liquid	725.02

301.03_nat_us_09_14_2005

301.03 General.

Add the following:

Written approval of the roadbed is required before placing aggregate.

For pit run or grid-rolled material, furnish material smaller than the maximum size. No gradation other than maximum size will be required for pit-run or grid-rolled material. For grid rolling, use all suitable material that can be reduced to maximum size. After processing on the road, remove all oversize material from the road and dispose of it as directed by the CO.

Provide additives or binder, if required, at the proportions specified.

Develop and use Government furnished sources according to Section 105.

If the aggregate is produced and stockpiled before placement, handle and stockpiled according to Section 320. Establish stockpile sites at locations approved. Clear and grub stockpile sites according to Section 201.

301.04_nat_us_03_03_2005

301.04 Mixing and Spreading.

Delete the first sentence of the first paragraph and add the following:

Ensure that aggregate and any required additives, water, mineral filler, and binder are mixed by the specified method except, if crushed aggregate products are being produced and mineral filler, binder, or additives are required, uniformly blend following crushing. Control additive proportions to 0.5 percent dry weight.

(a) Stationary Plant Method. Mix the aggregate with other required materials in an approved mixer. Add water during the mixing operation in the amount necessary to provide the moisture content for compacting to the specified density. After mixing, transport the aggregate to the jobsite while it contains the proper moisture content, and place it on the roadbed or base course using an aggregate spreader.

(b) Travel Plant Method. After placing the aggregate for each layer with an aggregate spreader or windrow-sizing device, uniformly mix it with other required materials using a traveling mixing plant. During mixing, add water to provide the necessary moisture content for compacting.

(c) Road Mix Method. After placing the aggregate for each layer, mix it with other required materials at the required moisture content until the mixture is uniform throughout. Mix aggregate, water, and all other materials until a uniform distribution is obtained.

Spread the aggregate in a uniform layer, with no segregation of size, and to a loose depth that will provide the required compacted thickness.

When placing aggregate over geotextile, place aggregate in a single lift to the full depth specified.

Route and distribute hauling and leveling equipment over the width and length of each layer.

301.05_nat_us_05_17_2005

301.05 Compacting

Delete and replace with the following:

Compact each layer full width. Roll from the sides to the center, parallel to the centerline of the road. Along curbs, headers, walls, and all places not accessible to the roller, compact the material with approved tampers or compactors.

Compact the aggregate using one of the following methods as specified:

Compaction A. Operating spreading and hauling equipment over the full width of the travelway.

Compaction B. Operate rollers and compact as specified in Subsection 204.11(a)(1).

Compaction C. Moisten or dry the aggregate to a uniform moisture content between 5 and 7 percent based on total dry weight of the mixture. Operate rollers and compact as specified in Subsection 204.11(a)(1).

Compaction D. Compact to a density of at least 95 percent of the maximum density, as determined by AASHTO T 99, method C or D.

Compaction E. Compact to a density of at least 96 percent of the maximum density, as determined by the Modified Marshall Hammer Compaction Method (available upon

request from USDA Forest Service, Regional Materials Engineering Center, P.O. Box 7669, Missoula, MT 59807).

Compaction F. Compact to a density of at least 95 per-cent of the maximum density, as determined by AASHTO T 180, method C or D.

Compaction G. Compact to a density of at least 100 percent of the maximum density as determined by the Modified Marshall Hammer Compaction Method (available upon request from USDA Forest Service, Regional Materials Engineering Center, P.O. Box 7669, Missoula, MT 59807).

For all compaction methods, blade the surface of each layer during the compaction operations to remove irregularities and produce a smooth, even surface. When a density requirement is specified, determine the in place density and moisture content according to AASHTO T 310 or other approved test procedures.

301.06_nat_us_03_03_2005

301.06 Surface Tolerance.

Add the following:

Thickness and Width requirements:

The maximum variation from the compacted specified thickness is ½ inch. The compacted thickness is not consistently above or below the specified thickness and the average thickness of 4 random measurements for any ½ mile of road segment is within + ¼ inch of the specified thickness.

The maximum variation from the specified width will not exceed +12 inches at any point. The compacted width is not consistently above the specified width and the average of any four random measurements along any ½ mile of road segment is within +4 inches of the specified width.

301.09_nat_us_07_07_2005

301.09 Measurement.

Replace the second paragraph with the following:

Measure aggregate by cubic yard compacted in place when payment is by contract quantities.

301.10_nat_us_03_03_2005

301.10 Payment

Delete the following:

adjusted according to Subsection 106.05

303 - Road Reconditioning

303.00_01_us_10_11_2006

Delete Section 303 in its entirety and replace with the following.

Description

303.01 This work consists of reconditioning ditches, shoulders, roadbeds, parking areas, turnouts, approach road intersections, cattleguards, asphalt surfaces and aggregate surfaces. Construct outslopes, clean and maintain all roadbed drainage structures when shown on the plans.

Material

303.02 Conform to the following Subsection:

Water 725.01

Construction Requirements

303.03 Ditch Reconditioning. Remove all slide material, sediment, vegetation, and other debris from the existing ditches and culvert inlets and outlets. Reshape ditches and culvert inlets and outlets to achieve positive drainage and a uniform ditch width, depth, and grade. Dispose of waste as shown on the plans.

303.04 Shoulder Reconditioning. Repair soft and unstable areas according to Subsection 204.07. Remove all slide material, vegetation, and other debris from existing shoulders including shoulders of parking areas, turnouts, and other widened areas. Dispose of waste as shown on the plans.

303.05 Roadbed Reconditioning Repair soft and unstable areas according to Subsection 204.07. Remove all organic, deleterious material larger than 6 inches from the top 6 inches of subgrade. Dispose of waste as shown on the plans. Scarify, rip and shape the traveled way and shoulders at locations and to the depth and width designated on the plans. Remove surface irregularities and shape to provide a uniform surface.

Dispose of rock larger than 4 inches brought to the surface during scarification in areas designated on the plans.

For portions of roads not requiring scarification, the roadbed may contain rocks larger than 4 inches provided they do not extend above the finished roadbed surface. Reduce in place or remove rock extending above the finished roadbed surface. Dispose of removed rock in areas designated on the plans.

Compact using the following method as specified:

(a) Compaction A. Operate equipment over the full width.

(b) Compaction B. Operate rollers over the full width of each layer until visual displacement ceases, but not fewer than three complete passes. Use rollers that meet the following requirements:

(1) Steel wheeled rollers, other than vibratory, capable of exerting a force of not less than 250 pounds per inch of width of the compression roll or rolls.

(2) Vibratory steel wheeled rollers equipped with amplitude and frequency controls with a minimum weight of 6 tons, specifically designed to compact the material on which it is used.

(3) Pneumatic-tired rollers with smooth tread tires of equal size that will provide a uniform compacting pressure for the full width of the roller and capable of exerting a ground pressure of at least 80 psi.

303.06 Aggregate Surface Reconditioning. Repair soft and unstable areas to the full depth of the aggregate surface and according to Subsection 204.07. Scarify to the depth of the aggregate surface or to a depth of 8 inches, whichever is less, and remove surface irregularities. Reshape, finish, and compact the entire aggregate surface according to Section 308.

303.07 Roadway Reconditioning. Perform all the applicable work described in Subsections 303.03 through 303.06.

Maintain the existing cross slope or crown unless otherwise shown on the plans. Establish a blading pattern that will retain the surfacing on the roadbed and provide a through mixing of the materials within the completed surface width.

Blade and shape the subgrade for both surfaced and unsurfaced roads when moisture content is suitable for compaction.

303.08 Pulverizing. Scarify the surface to the designated depth and width. Pulverize all material to a size one and one half times the maximum sized aggregate or to 1½ inches, whichever is greater. Mix, spread, compact, and finish the material according to Section 301.

303.09 Acceptance. See Table 303-1 for sampling and testing requirements. Road reconditioning work will be evaluated under Subsections 106.02 and 106.04.

Measurement

303.10 Measure the Section 303 items listed in the Schedule of Items according to Subsection 109.02 and the following as applicable.

Measure ditch reconditioning and shoulder reconditioning by the mile, by the station or foot horizontally along the centerline of the roadway for each side of the roadway.

Measure roadbed reconditioning, aggregate surface reconditioning, roadway reconditioning, and pulverizing by the mile, by the station, or by the square yard.

Payment

303.11 The accepted quantities will be paid at the contract price per unit of measurement for the Section 303 pay items listed in the bid schedule. Payment will be full compensation for the work prescribed in this Section. See Subsection 109.05.

602 - Culverts and Drains

602.03_nat_us_09_06_2005

602.03 General.

Add the following:

Ensure that the final installed alignment of all pipe allows no reverse grades, and does not permit horizontal and vertical alignments to vary from a straight line drawn from center of inlet to center of outlet by more than 2 percent of pipe center length or 1.0 feet, whichever is less.

607 - Cleaning, Reconditioning, and Repairing Existing Drainage Structures

607.04_nat_us_05_01_2013

607.04 Cleaning Culverts in Place.

Add the following:

If approved by the CO, all or part of the pipe designated to be cleaned in-place may be removed, cleaned, and re-laid in accordance with Section 602. In these cases, furnish all material required to replace damaged pipe and joints and relay the pipe.

625 - Turf Establishment

625.03_nat_us_07_02_2007

625.03 General.

Delete this subsection and replace with the following:

Apply turf establishment to prepared ground or any disturbed area between ***April 15th*** and ***October 15th***. Apply turf establishment to the areas shown on the plans or worklists within **7** days after completion of ground disturbing activities. Unless otherwise specified in writing by the CO apply turf establishment after each ***1000*** foot section of road has been constructed to template lines. Seeded areas damaged by construction activities shall be reseeded within 10 days of the damage. Do not seed during windy weather or when the ground is excessively wet, frozen, or snow covered.

Assure that all seed and mulch used in the work conforms to the weed free requirements of Section 713.

625.04 Preparing Seedbed.

Delete entire subsection and replace with the following:

Ensure that the surface soil is in a roughened condition favorable for germination and growth.

625.05 Watering

Delete entire subsection.

625.06 Fertilizing.

Delete entire subsection and replace with the following:

Apply fertilizer having a chemical analysis as listed below by the following methods.

(a) Dry Method. Apply the fertilizer with approved mechanical equipment. Hand operated methods are satisfactory on areas inaccessible to mechanical equipment.

(b) Hydraulic method. Use hydraulic-type equipment capable of providing a uniform application using water as the carrying agent. Add fertilizer to the slurry and mix before adding seed. Add the tracer material when designated by the CO.

Fertilizer. Apply fertilizer at the rate of ***450*** pounds per acre. Insure that the fertilizer meets the following chemical analysis:

Nutrient	Percent
Nitrogen, N	***10***
Phosphorus, P_2O_5	***20***
Potassium, K	***20***

625.07 Seeding.

Delete the first sentence and add the following.

Apply seed mix by the following methods**:**

(a) Dry method. Delete the third sentence.

Add the following after subsection

(b).Seed Mix. Furnish and apply the following kinds and amounts of pure live seed from Ernst Conservation Seeds, 9006 Mercer Pike, Meadville, PA (800) 873-3221 or Fax (814) 336-5191 or www.ernstseed.com Native Right-of Way Woods Seed Mix with Annual Ryegrass-ERNMX-132-1:

Type of Seed	Quantity of Pure Live Seed (Lbs/Acre)
1. 30% Virginia Wild Rye	9
2. 20% Annual Rye Grass	6
3. 15% Shelter Switchgrass	4.5
4. 10% Creeping Red Fescue	3
5. 5% Autumn Bentgrass	3
6. 5% Fox Sedge	3
7. 5% Showy Tick Trefoil	3
8. 5% Nimble Will	3
9. 5% Tioga Deer Tongue	3
	Total Seeding Rate 30lb per acre

Determine the pounds of seed to be furnished per acre by dividing the pounds of pure live seed required per acre by the product of the percent purity and percent germination.

625.08 Mulching.

Delete the entire subsection and replace with the following:

Apply Mulch within ***24*** hours after seeding by the following methods.

(a) Dry Method. Apply mulch with a hand spreader or a spreader utilizing forced air at a rate of ***4000*** pounds per acre. Anchor the mulch with an approved stabilizing emulsion tackifier at a rate of ***0***gallons per acre. Do not mark or deface structure, pavements, utilities, or plant growth with tackifier.

(b) Hydraulic Method. Apply mulch in a separate application from the seed using hydraulic-type equipment according to Subsection 625.07(b).

Apply wood fiber or grass straw cellulose fiber mulch at a rate of ***775*** pounds per acre.

Apply bonded fiber matrix hydraulic mulch at a minimum rate of ***775*** pounds per acre. Apply so no hole in the matrix is greater than 0.04 inches. Apply so that no gaps exist between the matrix and the soil.

Inaccessible areas may be mulched by hand. Apply mulch uniformly over the entire disturbed area.

625.09 Protecting and Caring for Seeded Areas

Delete the first sentence and add the following:

Protect and care for seeded areas until final acceptance.

625.11 Measurement.

Delete the entire Subsection and replace with the following:

Measure the Section 625 items listed in the bid schedule according to Subsection 109.02.

633 - Permanent Traffic Control

633.02_nat_us_03_03_2005

633.02 Material.

Add the following subsections

Protective Overlay Film	718.02
Edge Film	718.02

633.03_nat_us_03_03_2005

633.03 General.

Delete the subsection and add the following:

Furnish traffic control devices and guide signs according to the MUTCD, approved USDA-FS and state supplements, the current edition of USDA-FS EM-7100-15 Sign and Poster Guidelines for the Forest Service, and Standard Highway Signs published by FHWA. Submit the sign list for approval before ordering.

633.05_nat_us_03_03_2005

633.05 Panels.

Add the following:

Apply protective overlay film and top edge film as required and according to with manufacturer's recommendations.

Delete the sentence: "Use antitheft fasteners where possible" in the fifth paragraph and replace it with the following: "For each sign panel use at least one antitheft fastener."

635 – Temporary Traffic Control

635.03_nat_04_05_2004

635.03 General.

Add the following:

Install temporary traffic control signs to temporary posts or approved temporary sign mounts.

The work includes all traffic control for all phases of work.

648 – Streambed Simulation

Description

648.01 This work consists of furnishing and installing alluvium, rock, logs, trees, rootwads and specified fill to simulate natural stream profile, grade control structures, and streambed through culverts, bridge structures, and existing stream channels. Work includes developing materials; hauling materials; dewatering; sediment control; placing bedding and backfill to construct stream simulation channels inside and outside of the structures (culverts, bridges, existing channels); placing, keying, sealing, and compacting designed streambed fill; constructing instream structures (steps, pools, riffles, ribs, banks); reconstructing existing channels; and all other streambed work to complete the project.

Material

648.02 Conform to the following Section and Subsections:

Foundation Fill.....704.01
Streambed Simulation Rock 705.07
Channel Rock 705.08

Furnish instream structures materials (boulders, boulder clusters, ribs, steps, riffles, etc) and stream simulation streambed mix with the sizes and gradations as required in the contract.

Provide native log materials that are green, sound, and free of cracks or defects that would affect structural integrity or accelerate decay.

Sort material for streambed simulation rock by screening (power screen or grizzly/stationary screen) as shown on the plans. Large particles may be machine sorted by heavy equipment or hand labor.

Mix streambed simulation rock in proportions based on Table 705-4. All streambed material will be similar in shape / angularity as those found in the natural stream channel or as designated in the specifications. Tolerance for material gradation is + or – 5% for each screen size listed in the gradation.

Provide streambed simulation rock and channel rock that is durable and at least as angular as those found in the natural stream channel or as SHOWN ON THE PLANS.

Do not use rounded channel rock in the construction of banks or steps within the culvert or bridge structure. Rounded channel rocks may be used outside the culvert or bridge structure if approved by the CO in the field.

Request approval of rock to be used for steps, banks and all grade control structures 3 days prior to scheduled placement.

Construction

648.03 General. Place streambed simulation rock on a prepared surface to form a well-graded, low permeability mass, similar in appearance and form to the natural stream channel or as required in the contract.

648.04 Equipment Operations.
An oil spill containment kit is required on each job site when working in and around the stream. Composition of the kit is dependent on the job; determine contents of the kit as needed for each job. At a minimum, include tarps and oil-absorbent pads. Provide floating oil boom downstream of the work site.

648.05 Equipment Limitations.

Do not drive metal track or rubber tired equipment directly on metal or concrete structure surfaces. Place a layer of streambed mix material on the structure bottom before operating metal track or rubber tired equipment directly on metal or concrete structure surfaces.

648.06 Excavation. Control excavated material to minimize disturbance to the adjacent channel and banks. Incorporate suitable streambed materials into the project if required gradations are accordance with contract specifications.

Specific culvert installation time restrictions and installation plan requirements are indicated in the contract.

648.07 Dewatering. Dewatering or diversions are required for construction and adjacent instream work in addition to complete reconstruction of the channel. Dewatering is not required when constructing isolated or infrequent structures such as single rock or log step and other instream structures in channel reconstruction areas outside 25 feet from the inlet or outlet of the structure. Customize dewatering to the site depending on flow, ground water depths at the time of installation, terrain configuration, and culvert embedment depths. Submit a dewatering plan 15 days in advance of construction. Include in the plan the method (bypass or pumping), number of pumps and capacity required, pump and bypass culvert calculations, location/layout of dewatering operations and equipment, and erosion control measures for dealing with the return flow back to the existing stream channel. The plan will be approved by the CO within 14 calendar days of plan submission.

The existing 6’7”x4’7” culvert should be used for by-passing flows during construction of the footers. In order to pass the 2-yr flood (182 cfs) with about a 1 foot head, the upstream coffer dam should be built to an elevation of 99 to provide 1 foot of freeboard.

The July-Sep mean monthly flows for Wintergreen are about 3.5-4.0 cfs (about 1,6000-1,800 gal/min). The by-pass pump while constructing the bed needs to be capable to pump this amount. If it is wetter or dryer than average during the construction period it could be a few cfs higher or lower.

Maintain the dewatering pumping operations to ensure return flow does not exceed State water quality standards. Water pumped from the construction site may require additional filtration by filter bags or other methods (settling basins, gravel filters, etc) to prevent turbid water from directly entering the stream.

Place additional measures or cease operations until the discharge reaches allowable levels when turbidity exceeds State water quality standards.

Relocate fish contained within the cofferdams before the site is completely dewatered. Place relocated fish in the closest pool upstream of the construction zone.

If trash pumps are used during construction, the intake must be operated and maintained to prevent fish entrapment, entrainment, or injury with the use of perforated or slotted plate and woven wire with a mesh size not greater than 3/32 inch or a profile bar and wedgewire with openings not greater than 1/16 inch. Approach velocities shall not exceed a passive velocity of 0.2 feet per second (fps) or an active velocity 0.4 fps.

648.08. Rewatering. Conduct rewatering activities to minimize sediment movement downstream of the site upon completion of instream work. Prior to rerouting stream flow into the new channel, rinse the surface of the streambed to removed fine-grained sediment. After the initial sediment pulse is removed, slowly breach the coffer/diversion dams to avoid a large pulse of water being sent through the newly constructed channel.

648.09 Blasting and Rock Removal. Remove bedrock encountered during excavation to the lines and grades required in the contract. Remove rock by either mechanical means with hydraulic impact hammers / rock breakers, by ripping, or blasting. When explosives are used, do not cause mortality to juvenile fish by transmitting excessive blasting overpressures through the ground to the fish habitat. Limit blasting overpressures to a maximum of 2 psi in fish habitat.

648.10 Placed Streambed Simulation Material. Begin construction from the downstream end working upstream. Changes to this sequence will be allowed on a case by case basis due to poor stream to culvert alignment, traffic requirements, limited access, and preservation of existing trees reinforcing the banks.

Place streambed simulation rock in one or more layers with a maximum layer depth less than 1 ½ times the average dimension of the B-axis of the streambed simulation rock, but no greater than 2ft. Place streambed simulation rock by methods that do not cause segregation or damage to the prepared surface. Place or rearrange individual rocks to obtain a uniformly dense, compact, low permeability mass, matching streambed simulation details. Fill voids by machine or hand tamping before placing the next lift. Compact streambed materials by mechanical means such as hand or excavator operated vibratory plate compactors.

Fill all voids left during placement of streambed simulation rock, boulders, steps, ribs, banks and streambed materials adjacent to footings, concrete structures or corrugated pipes with foundation fill. Use water pressure, metal tamping rods, and similar hand operated equipment to force material into all surfaces and subsurface voids between the structure and rocks, and between individual rocks. Ensure the streambed is sealed to limit permeability.

Notify the CO at least 48 hours in advance of the streambed material installation.

648.11 Rock Bedforms (steps, ribs, riffles), Forcing Features (boulders, boulder clusters), and Bank Construction. Construct bedforms and banks as specified in the contract. Construction will proceed from downstream to upstream. Machine or hand place banks, steps, and ribs and key in place with select key pieces of the required size class, along with smaller materials of varying sizes to fill voids. Construct low flow channel through the center of the channel AS SHOWN ON THE DRAWINGS. Place steps and ribs so the tops are uneven, containing several high and low points to concentrate water during low flows. Place step and rib

surfaces so they are higher at the outside edge of the culvert (culvert wall) and slope down to the outside edge of the constructed low flow channel AS SHOWN ON THE PLANS.

Construct steps with footer rocks placed before the top step rocks are installed. Use footer rocks which are the same size class as the top step rocks. Fill all voids with smaller materials as construction progresses to minimize permeability.

Construct banks out of large blocky key pieces of the required size class AS SHOWN ON THE DRAWINGS. Key and lock smaller materials of varying sizes to fill voids. Bank materials will be hand keyed in place and compacted depending on the size of materials used as designated in the field by the CO. Construct bank faces to be uneven, protrude into the channel, and be rough in appearance. Construct the top of the bank to be fairly uniform. Tie back constructed banks and margins at the edge of the structure walls into the existing stream banks at dimensions similar to those found in the reference reach or AS SHOWN ON THE DRAWINGS.

When single rocks are used as roughness elements and habitat diversity, bury to 50% of the diameter or as SHOWN ON THE PLANS. Fill and compact voids around these structures. When constructed as clusters of particles, key pieces within the cluster will be buried 50% of the diameter or as SHOWN ON THE PLANS.

Notify the CO at least 48 hours in advance of the installation of any streambed, bedform, roughness feature, log structure, or bank construction.

648.12 Log and Root Wad Structures. Locate and place log structures as required in the contract, and/or designated in the field by the CO.

Construct log weirs with cross slope gradients not less than 5(H):1(V), unless SHOWN ON THE DRAWINGS or staked in the field by the CO, and maximum tolerance of 6(H):1(V), unless approved in writing by the CO.

Embed log weirs to a minimum depth of 10 feet beyond bank full widths or half bankfull width on each side, whichever is greater or AS SHOWN ON THE DRAWINGS. When placing habitat logs (overhanging a portion of the stream) that lay on the banks, ensure 2/3 of the log remain behind bankful width on top of the bank.

Embed rootwad revetment trunks a minimum of 10 feet behind bankfull width limits or as SHOWN ON THE DRAWINGS. Bury the root to a point where the base of the bol is resting in the bottom of the bank or as required in the contract, and/or designated in the field by the CO.

Measurement

648.13 Method. Measure the Section 648 items listed in the bid schedule according to Subsection 109.02 and the following as applicable.

Channel construction per linear unit includes furnishing and installing all rock and work associated with simulation streambed construction and includes the installation of rock steps, ribs, pools, banks, riffles, boulders/boulder clusters and miscellaneous rock structures.

All log structures and rootwad revetment will be measured separately for payment if designated on the schedule of items.

Instream structures composed of rock and wood will be measured separately for payment if designated on the schedule of items.

Do not measure dewatering and diversions, they are considered incidental to construction of the structures unless measured separately for payment if designated on the schedule of items.

Work and materials required for stream simulation are considered incidental to installation of the structure unless designated on the schedule of items.

Payment

648.14 Basis. The accepted quantities, measured as provided in Subsection 109.02, will be paid at the contract price per unit of measurement for the Section 648 pay items listed in the bid schedule. Payment will be full compensation for the work prescribed in this Section. See Subsection 109.05.

SPS 703 - Aggregate

Add the following: **703.20 Driving Surface Aggregate.** All Driving Surface Aggregate (DSA) is to be derived from natural limestone formations. Stone is defined as rock that has been crushed; rock is defined as consolidated mineral material. For use in this program, both are restricted to that which has been mined or quarried from existing bedrock formations.

All components of the aggregate mix are to be derived from crushed parent rock material that meets program specifications for abrasion resistance, pH and freedom from contaminants. Ninety-eight percent (98%) of the fines passing the #200 sieve must be parent rock material. No clay or silt soil may be added. The amount of particles passing the #200 sieve shall be determined using the washing procedures specified in PTM No. 100.

Size: The required amount and allowed ranges, determined by weight, for various size particles are:

PASSING SIEVE	LOWER%	HIGH%
1 ½ inch	100%	
¾ inch	65%	90%
#4	30%	65%
#16	15%	30%
#200	10%	20%

LA Abrasion: The acceptable limit is measured by weight loss is “less than 40% loss”. Los Angeles Abrasion test, AASHTO T-96 (ASTM C 131) shall be used to determine this property. Existing tests made for and approved by PennDOT will be accepted.

Sulfate Test: Soundness or resistance to freeze/thaw (i.e. sulfate test) is not specified for this application because a gravel road driving surface aggregate is not bound within a concrete or asphalt mix.

pH: Aggregate must be within the range of pH 6 to pH 9 as measured by EPA 9045C.

Optimum Moisture: Material is to be delivered and placed at optimum moisture content as determined for the particular source. The optimum percentage moisture is to be identified by the supplier in the bid purchasing documents. Loads with excessive moisture shall be rejected. Water draining from the tailgate, excess material sticking to the roller drum or the inability to compact the material are field indicators of excess moisture. In addition, if a load is too dry or does not have enough fines it will be rejected. Visual inspection of the load and poorly consolidated material after compactive effort are field indicators of low moisture or poor product gradation.

Transport: Tarps are to be used to cover 100% of the load's exposed surface from the time of loading until immediately before dumping. This requirement includes standing time waiting to dump.

Aggregate producers are required by the program to certify that the aggregate they deliver conforms to the program specifications. To eliminate segregation of material, stockpiling of material at jobsite will not be permitted unless authorized by COR.

The following are "Local" sources for this material:

Hawbaker – Turtlepoint, PA. 814-237-1444 or 814-642-2500

New Enterprise Stone & Lime Co. Tyrone, PA 814-695-4405

Road Preparation Specifications: The road surface to receive the aggregate should have template with crown of 2% or ¼ inch per foot. The receiving surface is to be scarified to permit knitting of the aggregate.

Driving Surface Aggregate Placement: Minimum compacted depth of four inches is to be established for driving surface. Driving Surface Aggregate is to be applied by tailgate spreading unless spreader box is specified. Material when placed shall be compacted as follows: Beginning on the lower or berm side of the crown, begin rolling and work your way to the top of the crown by overlapping the successive longitudinal passes. Do not run the roller lengthwise directly on the crown. Compaction with truck tires is not accepted. Steel wheel rollers other than vibratory shall be capable of exerting a force of not less than 250 pounds per inch of width of the compression roller or rollers. Rollers shall be self propelled with a minimum weight of 6 tons. Contractor must have certification in writing that material placed is Driving Surface Aggregate meeting this specification.

1" Minus Aggregate (DSA Gravel non limestone) Size: The required amount and allowed ranges, determined by weight, for various size particles are:

PASSING SIEVE	LOWER%	HIGH%	
1 ½ inch	100%		
¾ inch	65%	95%	
#4	30%	65%	LA Abrasion < 40%
#16	15%	30%	Sulfate Test – Not Applicable
#200	10%	15%	PH between 6 and 9

Material available at Glenn O. Hawbacker – Pittsfield Pit 814-563-7911

AI Construction Corporation – Gardland Plant 814-563-7680

Pennsylvania 2A Gradation:

The required amount and allowed ranges, determined by weight, for various size particles are:

PASSING SIEVE	LOWER%	HIGH%	
2 inch	100%		
¾ inch	52%	100%	
#4	24%	50%	LA Abrasion < 40%
#16	10%	30%	Sulfate Test – Not Applicable
#200	0%	10%	PH between 6 and 9

AASHTO 57 Gradation:

The required amount and allowed ranges, determined by weight, for various size particles are:

PASSING SIEVE	LOWER%	HIGH%
1-1/2 inch	100%	
1 inch	95%	100%
1/2 inch	25%	60%
#4	0%	10%
#8	0%	5%

704 - Soil

704.02_nat_us_03_02_2005

704.02 Bedding Material.

Delete Subsection 704.02 and substitute the following:

Furnish a well graded, free draining material free of excess moisture, muck, frozen lumps, roots, sod, or other deleterious material conforming to the following:

(a) Maximum particle size	3 inch or half the corrugation depth, whichever is smaller
(b) Material passing No. 200 sieve, AASHTO T 27 and T 11	10% max.

705 - Rock

705.02 Riprap Rock.

Replace with the following:

Furnish rock sound, free from structural defects and foreign substances such as soil, shale, and organic materials. Use rock conforming to the following requirements:

No shale seams
Hard and angular shaped rock with neither width nor thickness less than one-third its length.

Minimum specific gravity of 2.5 as determined according to AASHTO T 85, bulk saturated, but surface-dry basis.

Each load of rock well-graded, from smallest to the largest size

Table 705-1
Gradation Requirements for Riprap

Class, Size No. Rock Size (inches)	Percent Passing (Square Openings)				
	R-7	**R-6**	**R-5**	**R-4**	**R-3**
30	100				
24		100			
18	15-50		100		
12	0-15	15-50		100	
9			15-50		
6		0-15		15-50	100
4			0-15		
3				0-15	15-50
2					0-15
Nominal Thickness	36	30	24	18	12

718 - Traffic Signing and Marking Material

718.05_nat_us_08_05_2009

718.05 Aluminum Panels

Delete the third paragraph and replace with the following:

Clean, degrease and properly prepare the panels according to methods recommended by the sheeting manufacturer. Conversion coatings will conform to ASTM B-921 or ASTM B-449.