NATIONAL FOREST TIMBER FOR SALE

CHEQUAMEGON/NICOLET NATIONAL FOREST

The Gates Salvage Sale is located within Compartments 1012, 1016, & 1071, Price County, WI, T39N, R1E, Sections 12, 13, 14, 23, 24, 25, 26, 27, & 35; T39N, R2E, Section 18, 31, and 32. The Forest Service will receive sealed bids in public at Medford-Park Falls Ranger District, 1170 4th Ave. S., Park Falls, WI 54552 at 11:00 AM local time on 01/26/2016 for an estimated volume of 454 CCF of Mixed Conifer sawtimber, 254 CCF of Mixed Hardwood sawtimber, 5101 CCF of Aspen pulpwood, 1028 CCF of Mixed Conifer pulpwood, and 2017 CCF of Mixed Hardwood pulpwood marked or otherwise designated for cutting. The Forest Service reserves the right to reject any and all bids. Interested parties may obtain a prospectus from the office listed below. A prospectus, bid form, and complete information concerning the timber, the conditions of sale, and submission of bids is available to the public from the Park Falls office (715-762-2461). A full prospectus can also be found on the Chequamegon-Nicolet National Forest website at http://go.usa.gov/3cEP9. The USDA is an equal opportunity provider and employer.

United States Department of Agriculture **Forest Service** **Chequamegon/Nicolet Medford/Park Falls Ranger District** **1170 4th Avenue S. Park Falls, Wisconsin 54552**

Reply to: 2430
Date: 01/07/2016

Dear Prospective Bidder:

On 01/26/2016, at 11:00 AM, sealed bids will be opened in the Medford-Park Falls Ranger District, 1170 4th Ave. S., Park Falls, WI 54552 for the Gates Salvage sale. This sale is located in Compartments 1012, 1016, & 1071, Price County, WI, T39N, R1E, Sections 12, 13, 14, 23, 24, 25, 26, 27, & 35; T39N, R2E, Section 18, 31, and 32. Timber sale Contract 2400-6T will be used. The termination date for this sale is 06/30/2019.

The estimated quantities in this contract have been determined prior to felling. The total estimated quantity on this sale is 8,854 CCF. The Forest Service encourages potential bidders to make their own inspection and estimate prior to bid submission. The Forest Service makes no representation, warranty, or guarantee of the accuracy of the following quantity estimates:

Estimated Quantities and Rates per Unit of Measure

Species	Product	Unit of Measure	Estimated Quantities	Average DBH	Advertised Rates	Base Rates	Required Deposits: Slash Disposal	Required Deposits: Road Maintenance
Mixed Conifer	Sawtimber	CCF	454.00	12.10	$30.51	$10.04	$0.00	$0.99
Mixed Hardwood	Sawtimber	CCF	254.00	14.20	$55.32	$19.03	$0.00	$0.99
Aspen	Pulpwood	CCF	5,101.00	9.90	$25.03	$8.36	$0.00	$0.99
Mixed Conifer	Pulpwood	CCF	1,028.00	6.50	$16.68	$5.81	$0.00	$0.99
Mixed Hardwood	Pulpwood	CCF	2,017.00	8.30	$26.39	$8.78	$0.00	$0.99
	Total	CCF	8,854.00				$0.00	$8,765.46

There is a $22,600.00 bid guarantee required on this sale.

If you wish further information on this sale, the prospectus and bid form, please write or call the Park Falls office (715-762-2461). A full prospectus can also be found on the Chequamegon-Nicolet National Forest website at http://go.usa.gov/3cEP9..

Sincerely,

BOB HENNES,
District Ranger

Enclosure

Sale Area Map
Gates Salvage Timber Sale
Medford Park Falls Ranger District
Chequamegon-Nicolet National Forest
T39N, R1E, Sections 12, 13, 14, 23, 24, 25, 26, 27, & 35
T39N, R2E, Sections 18, 31, & 32
Scale: 1: 15,840
10/08/2015 Sheet 1 of 3

Legend

- Waterbody
- Sale Area Boundary, BT1.1
- Payment Unit Boundary, BT1.1
- Wetland Protection, BT6.62
- Payment Unit Number, BT1.1
- Non USFS Land
- Protected Improvement - Survey Monument - BT6.22
- Specified Gate CT5.31#
- Streamcourse
- Protect Improvement - Culvert, BT 6.22
- Existing Transportation System, BT5.12
- Keep Open, BT6.22
- Traffic Control Device, BT6.33
- Protected Improvement - Gate - BT6.22
- Existing/Construct Berm
- Use of Roads, Prohibited, CT5.12#
- Streamcoarse Protection BT 6.5

Payment Unit Numbers	Designation By Species and Diameter CT2.335#	Cut Tree Marking CT2.352#	Protected Areas CT2.301#	Slash Disposal Measures CT6.7#	Special Protection Measures CT6.24#
1	DxSpp		PA	SDZ(1)	SMA
2	DxSpp		PA	SDZ(1)	
3	DxSpp		PA	SDZ(1)	
4	DxSpp		PA	SDZ(1)	
5	DxSpp		PA	SDZ(1)	
6	DxSpp		PA	SDZ(1)	
7	DxSpp			SDZ(1)	
8	DxSpp		PA	SDZ(1)	
9		CTM		SDZ(1)	

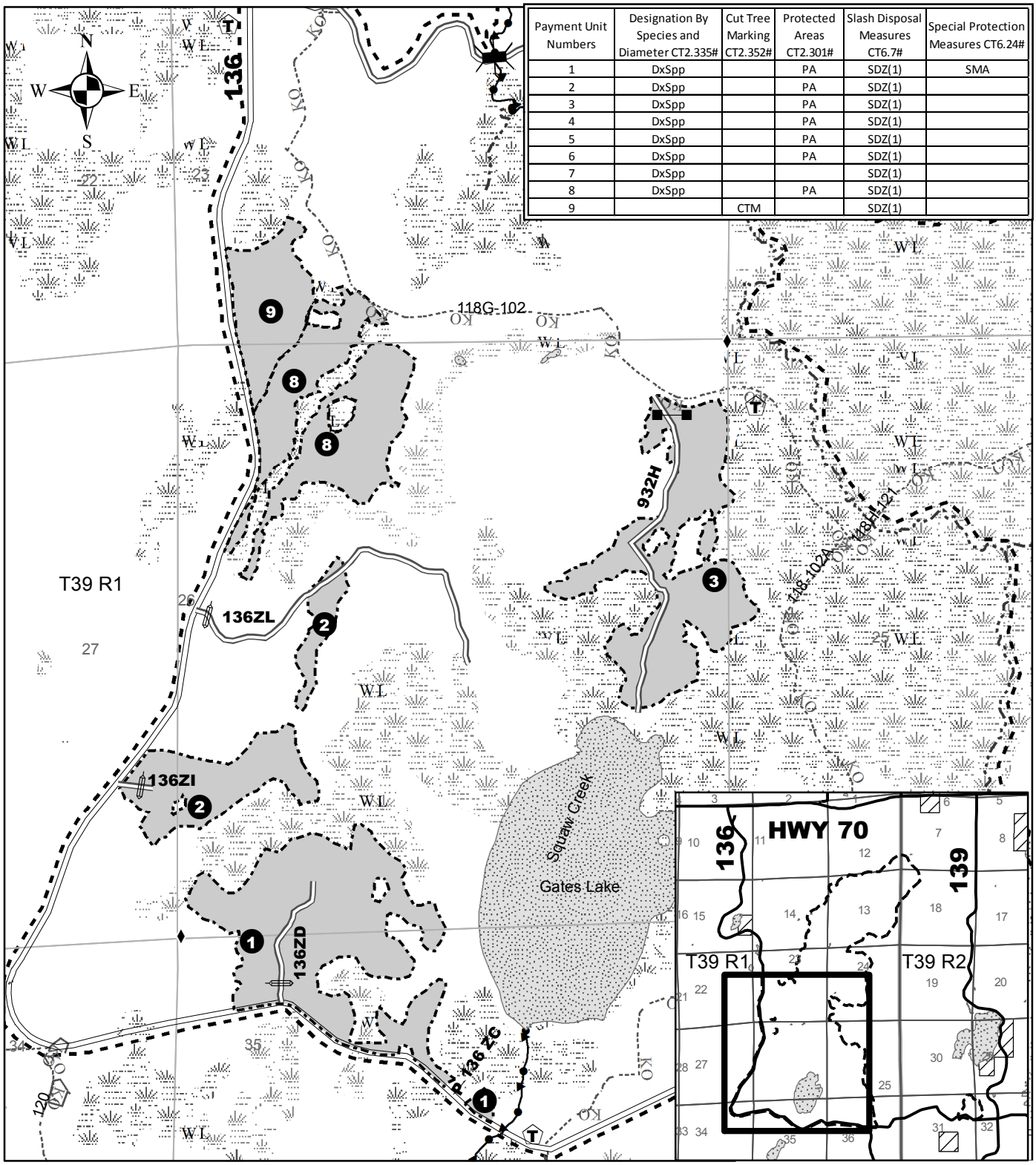

1 inch = 1,320 feet

0.2 0.1 0 0.2 Miles

Landlines are approximate SS 10/08/2015

Sale Area Map
Gates Salvage Timber Sale
Medford Park Falls Ranger District
Chequamegon-Nicolet National Forest
T39N, R1E, Sections 12, 13, 14, 23, 24, 25, 26, 27, & 35
T39N, R2E, Sections 18, 31, & 32
Scale: 1: 15,840
10/08/2015 Sheet 2 of 3

Legend

- Waterbody
- Sale Area Boundary, BT1.1
- Payment Unit Boundary, BT1.1
- Wetland Protection, BT6.62
- Payment Unit Number, BT1.1
- Non USFS Land
- Protected Improvement - Survey Monument - BT6.22
- Specified Gate CT5.31#
- Streamcourse
- Protect Improvement- Culvert, BT 6.22
- Existing Transportation System, BT5.12
- Keep Open, BT6.22
- Traffic Control Device, BT6.33
- Protected Improvement - Gate - BT6.22
- Existing/Construct Berm
- Use of Roads, Prohibited, CT5.12#
- Streamcoarse Protection BT 6.5
- Specified Culvert CT5.31#

Payment Unit Numbers	Designation By Species and Diameter CT2.335#	Cut Tree Marking CT2.352#	Protected Areas CT2.301#	Slash Disposal Measures CT6.7#	Special Protection Measures CT6.24#
1	DxSpp		PA	SDZ(1)	SMA
2	DxSpp		PA	SDZ(1)	
3	DxSpp		PA	SDZ(1)	
4	DxSpp		PA	SDZ(1)	
5	DxSpp		PA	SDZ(1)	
6	DxSpp		PA	SDZ(1)	
7	DxSpp			SDZ(1)	
8	DxSpp		PA	SDZ(1)	
9		CTM		SDZ(1)	

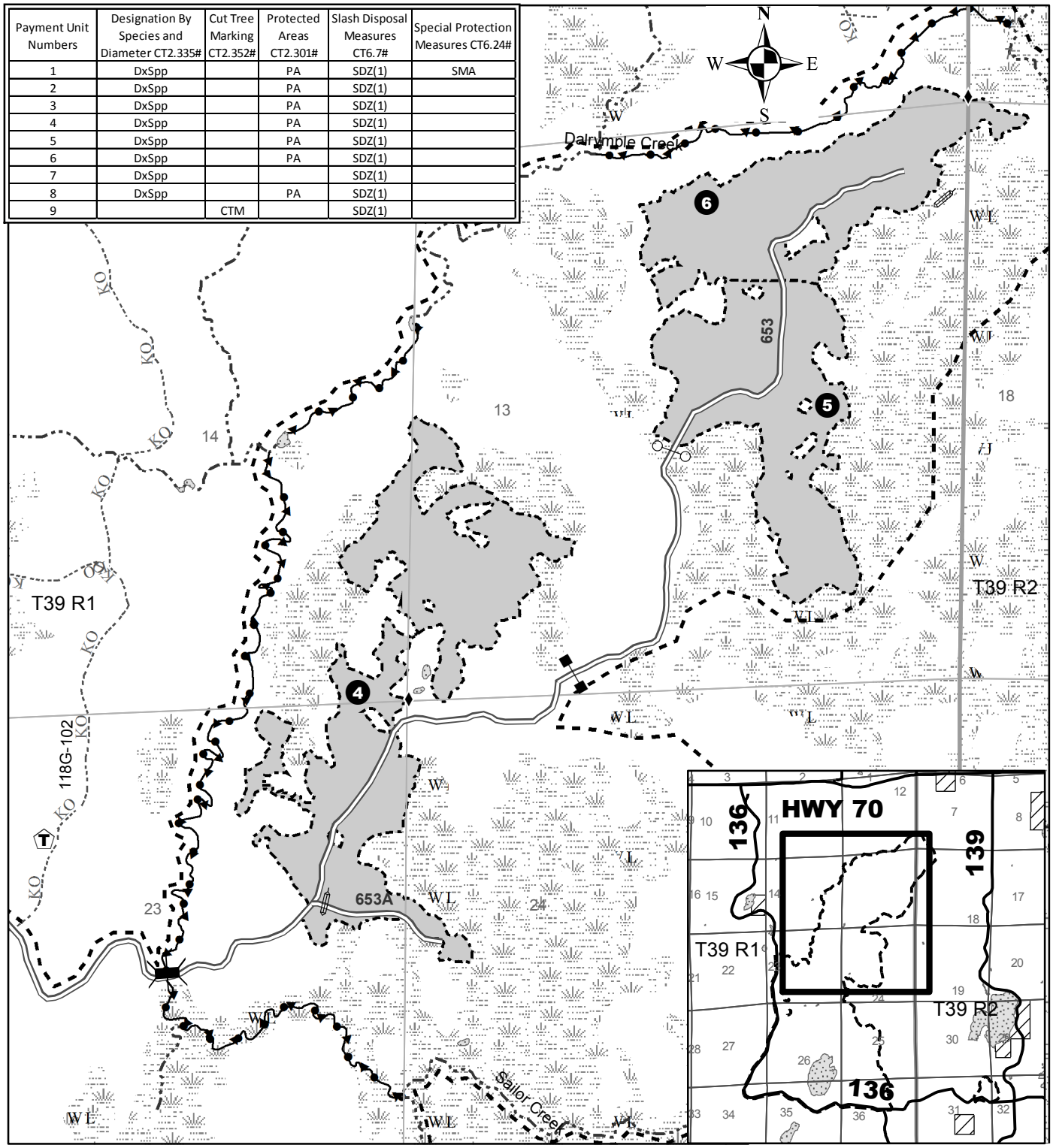

1 inch = 1,320 feet

0.2 0.1 0 0.2 Miles

Landlines are approximate SS 10/08/2015

Sale Area Map
Gates Salvage Timber Sale
Medford Park Falls Ranger District
Chequamegon-Nicolet National Forest
T39N, R1E, Sections 12, 13, 14, 23, 24, 25, 26, 27, & 35
T39N, R2E, Sections 18, 31, & 32
Scale: 1: 15,840
10/08/2015 Sheet 3 of 3

Legend

- Waterbody
- Sale Area Boundary, BT1.1
- Payment Unit Boundary, BT1.1
- Wetland Protection, BT6.62
- Payment Unit Number, BT1.1
- Non USFS Land
- Protected Improvement - Survey Monument - BT6.22
- Streamcourse
- Existing Transportation System, BT5.12
- Keep Open, BT6.22
- Traffic Control Device, BT6.33
- Protected Improvement - Gate - BT6.22
- Existing/Construct Berm
- Use of Roads, Prohibited, CT5.12#
- Streamcoarse Protection BT 6.5

Payment Unit Numbers	Designation By Species and Diameter CT2.335#	Cut Tree Marking CT2.352#	Protected Areas CT2.301#	Slash Disposal Measures CT6.7#	Special Protection Measures CT6.24#
1	DxSpp		PA	SDZ(1)	SMA
2	DxSpp		PA	SDZ(1)	
3	DxSpp		PA	SDZ(1)	
4	DxSpp		PA	SDZ(1)	
5	DxSpp		PA	SDZ(1)	
6	DxSpp		PA	SDZ(1)	
7	DxSpp			SDZ(1)	
8	DxSpp		PA	SDZ(1)	
9		CTM		SDZ(1)	

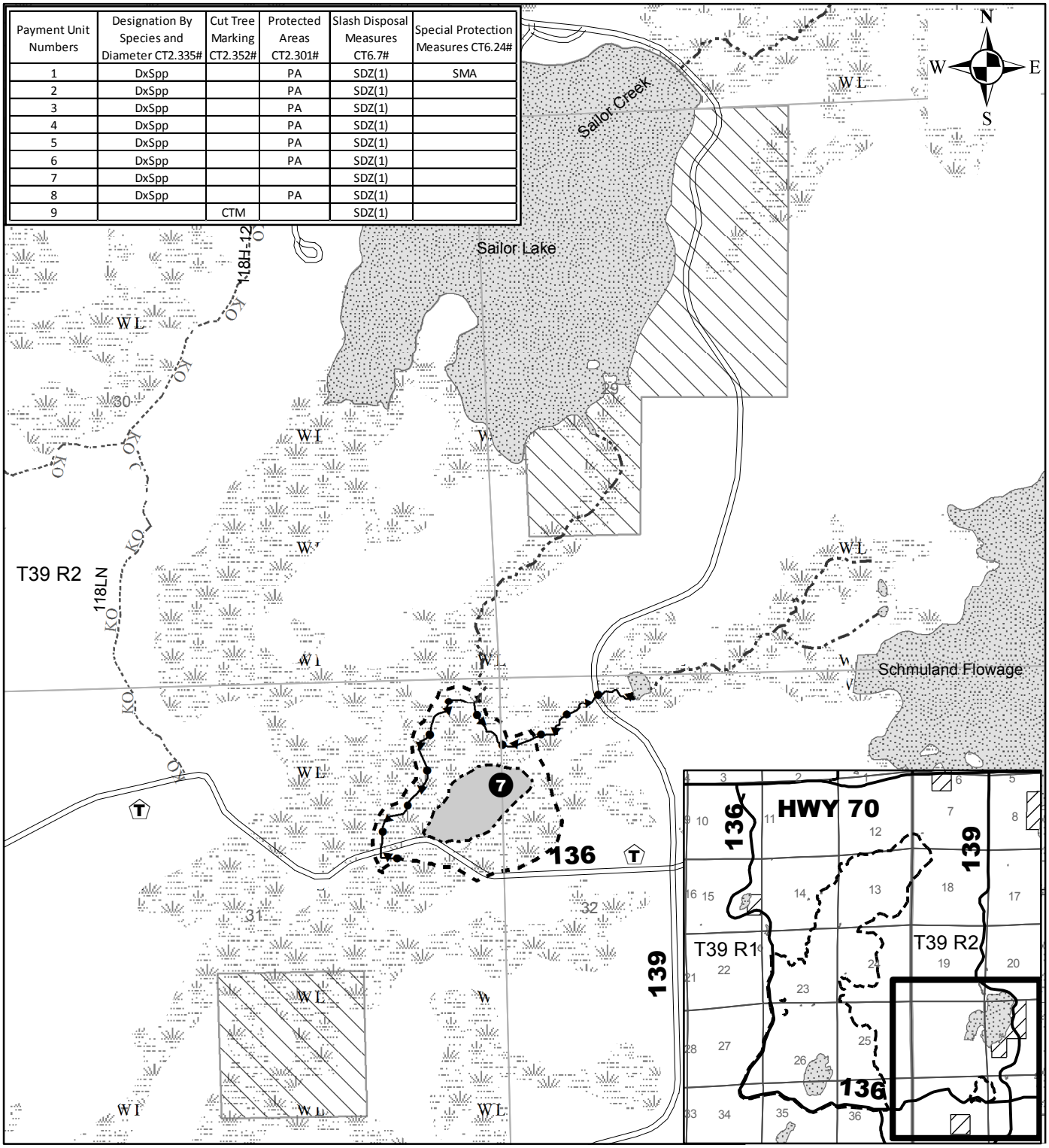

1 inch = 1,320 feet

0.2 0.1 0 0.2 Miles

Landlines are approximate SS 10/08/2015

TIMBER SALE PROSPECTUS

Sale Name :	Gates Salvage	**Type of Sale :**	Premeasured
National Forest :	Chequamegon/Nicolet	**Ranger District :**	Medford/Park Falls
Bidding Method :	Sealed Bid	**Bid Guarantee :**	$22,600.00

Location of Bid Opening : Medford-Park Falls Ranger District, 1170 4th Ave. S., Park Falls, WI 54552

Date : 01/26/2016 **Time :** 11:00 AM

1. INTRODUCTION. This prospectus furnishes prospective bidders with information not contained in the published advertisement and is designed to enable bidders to decide whether or not to further investigate the sale. The prospectus is not a legally binding document, but is offered to provide general information about a sale. The contract does not include descriptions, estimates, and other data in this prospectus, unless otherwise stated. In the event that the prospectus contains an error or contradicts the sample contract, the contract governs. Bidders are urged to examine the timber sale and make their own estimates. Timber sale Contract 2400-6T will be used. Inspect the sale area and the sample contract before submitting a bid. Obtain the appraisal, other information on the timber, and conditions of sale and bidding at Forest Service offices listed above and in the named attached advertisement.

2. BIDDING. This is a Sealed Bid sale. Bidders must submit sealed bids on prepared forms they can obtain from Forest Service offices listed above and in the attached advertisement. The forms include instructions for bidding and submission of the required certifications. A bid guarantee must be included with the bid in the form of cash, a bid bond on form FS-6500-13 (4/82) or later, certification of annual bid bond allocation on form FS-6500-13a (4/82) or later, an irrevocable letter of credit, a certified check, bank draft, cashiers check, official bank check, or bank or postal money order payable to the Forest Service, USDA in the amount specified above and in the bid form. The bid guarantee shall be returned to each bidder whose bid is not accepted.

3. LOCATION AND DESCRIPTION OF TIMBER. Refer to the sample contract and sale area map attached to the sample contract for legal location of sale area, location of payment units, location of cutting units, the acreage of sale area, and the cutting unit acreage.

THE FOLLOWING GENERAL LOCATION, ROUTES OF ACCESS, ACREAGES, AND OTHER SPECIAL LOCATION DATA DO NOT SUPERSEDE THE SALE AREA MAP OR SAMPLE CONTRACT.

Gates Salvage Sale is located a little more than 4 miles east of Fifield, WI, down Forest Road 136 (Gates Lake Rd.). Most Payment Units are accessed via existing roads requiring some maintenance work, while some blocks are accessed via temporary road segments.

Total Sale Area is estimated at 2668 acres, with cutting area estimated at 439 acres.
Payment Units 1, 2, 3, 4, 5, 6, 7, and 8 are aspen or mixed aspen regen harvests.
Payment Unit 9 is a hardwood intermediate salvage harvest cut.

Mixed Conifer Sawtimber consists mostly of white spruce with lesser amounts of black spruce.
Mixed Conifer Pulpwood consists mostly of white spruce and balsam fir, with lesser amounts of black spruce.
Mixed Hardwood Sawtimber consists mostly of paper birch and red maple.
Mixed Hardwood Pulpwood consists mostly of red maple, paper birch with lesser amounts of sugar maple, white ash, black ash, American elm, ironwood, and black cherry.

Refer to Section 20 of this prospectus for further information regarding the contract specifications

4. TIMBER QUANTITIES AND RATES. The quality, size, cut per acre, and product suitability of the timber are estimates based

on detailed cruise information on file and available for inspection at the Forest Service offices listed above and in the advertisement. VOLUME QUANTITIES LISTED HEREIN ARE MADE AVAILABLE WITH THE UNDERSTANDING THAT VALUES SHOWN ARE FOREST SERVICE ESTIMATES AND ARE NOT GUARANTEED. For these reasons, bidders are urged to examine the timber sale area and make their own estimates.

THE MINIMUM ACCEPTABLE BID RATE IS STATED IN THE ATTACHED BID FORM. THESE RATES ARE EFFECTIVE AT THE TIME OF ADVERTISEMENT.

Estimated Quantities and Rates per Unit of Measure

							Required Deposits	
Species	**Product**	**Unit of Measure**	**Estimated Quantities**	**Average DBH**	**Advertised Rates**	**Base Rates**	**Slash Disposal**	**Road Maintenance**
Mixed Conifer	Sawtimber	CCF	454.00	12.1	$30.51	$10.04	$0.00	$0.99
Mixed Hardwood	Sawtimber	CCF	254.00	14.2	$55.32	$19.03	$0.00	$0.99
Aspen	Pulpwood	CCF	5,101.00	9.9	$25.03	$8.36	$0.00	$0.99
Mixed Conifer	Pulpwood	CCF	1,028.00	6.5	$16.68	$5.81	$0.00	$0.99
Mixed Hardwood	Pulpwood	CCF	2,017.00	8.3	$26.39	$8.78	$0.00	$0.99
	TOTAL	CCF	8,854.00				$0.00	$8,765.46

Estimated Knutson-Vandenberg deposit for sale area improvement work in a total amount of $73,482.00 is included in total timber value.

5. PERIOD OF CONTRACT. The normal operating season covers the period between 01/01 and 12/31. Contract termination date is 06/30/2019. Extensions of this contract may be granted only when the purchaser has met specified conditions.

If an appeal or lawsuit is filed challenging the decision to award this contract or upon determination by the Regional Forester that conditions existing on this timber sale are the same as, or nearly the same as, conditions existing on other timber sale(s) in appeal or litigation, Contracting Officer may delay award or reject all bids. If delay in award is for 30 days or more during Normal Operating Season after bid opening, Contracting Officer shall, upon award, adjust the contract term to include additional calendar days in one or more Normal Operating Seasons equal to the time award is delayed during Normal Operating Season.

The purchaser must submit a Plan of Operations to the Contracting Officer for approval before operations begin or within 60 days of sale award, whichever is earlier. The plan must show how the purchaser plans to complete the contract by the termination date. In addition to the Plan of Operations, the purchaser must submit an annual Operating Schedule before commencing operations. This schedule will include the anticipated major activities and needs for harvest. This annual Operating Schedule does not require concurrence of the Forest Service.

6. PAYMENT. Payment for timber and any required deposits for slash disposal or road maintenance are required in advance of cutting. The Purchaser may transfer purchaser credit into the contract, or provide an acceptable payment guarantee prior to cutting. Payment for required deposits must be a cash payment. The purchaser shall make advance deposits in accordance with provision B(T)4.212 - Advance Deposits.

The high bidder whose bid is accepted shall, at the time the contract is signed and returned by the bidder, make a downpayment pursuant to Title 36, Section 223.49, of the Code of Federal Regulations. The Contracting Officer will notify the high bidder of the amount necessary to make this payment. In no case shall the downpayment be less than 10 percent of the total advertised value plus 20 percent of the bid premium. After receipt of the downpayment and a satisfactory performance bond and upon execution of the timber sale contract, the Forest Service will return the bid guarantee. A cash bid guarantee may be applied to the downpayment at the request of the purchaser. The purchaser cannot apply the amount deposited as a downpayment to cover other obligations due on the sale until conditions stated in the contract for release of downpayment have been met. Refer to the sample contract for the specific conditions.

By the midpoint between award date and the termination date, the purchaser shall have paid for, or in lieu thereof, deposited cash in the

greater amount of: (1) 50 percent of the total estimated bid premium, or (2) 35 percent of the total estimated sale value at bid date, exclusive of required deposits, rounded up to the next $100.

By the midpoint of the last normal operating season, or 12 months from the initial periodic payment, whichever date is first, the purchaser shall have paid for, or in lieu thereof, deposited cash in the amount of 75 percent of the total estimated sale value at bid date, exclusive of required deposits, rounded up to the next $100.

7. PERFORMANCE BOND. A performance bond is required. The penal sum of the bond will be 10 percent of the total bid value of the sale, rounded up to the nearest $100 when the total bid value is $10,000 or less; and rounded up to the nearest $1,000 when the total bid value exceeds $10,000 or $23,000.00 whichever is greater. If an irrevocable letter of credit is used to secure the performance bond, the termination of the letter of credit must be at least 6 months past the contract termination date.

8. SPECIFIED ROADS. Not Applicable.

9. ROAD MAINTENANCE. Purchaser shall perform or pay for road maintenance work, commensurate with purchaser's use, on roads controlled by Forest Service, and used by purchaser in connection with this sale. Road maintenance requirements are based on the predicted haul route. Any change in the purchaser's actual haul route may necessitate a change in the roads to be maintained and/or in the amount of required deposit for road maintenance. Required deposits for road maintenance are listed in Section 4 and in the sample contract. Maintenance specifications are in the sample contract.

10. INAPPLICABLE STANDARD PROVISIONS. See sample contract.

11. SPECIAL PROVISIONS. See sample contract.

12. SET-ASIDE SALES. Not Applicable.

13. LOG EXPORT AND SUBSTITUTION RESTRICTIONS. Not Applicable.

14. EQUAL EMPLOYMENT OPPORTUNITY COMPLIANCE REVIEW. If the total bid value plus required deposits for this contract exceeds $10 million, before award, the Forest Service shall request an equal employment opportunity compliance review of the high bidder to determine compliance with the provisions of Executive Order 11246 of September 24, 1965, as amended by Executive Order 11375 of October 13, 1967 and Executive Order No. 12086 of October 5, 1978.

15. AWARD. The Contracting Officer is required to make a determination of bidder responsibility as stated in Title 36, Section 223.101, of the Code of Federal Regulations.

To determine a purchaser to be responsible, a Contracting Officer must find that:

a. The purchaser has adequate financial resources to perform the contract or the ability to obtain them;

b. The purchaser is able to perform the contract within the contract term taking into consideration all existing contracts and Governmental business commitments;

c. The purchaser has a satisfactory performance record on timber sale contracts. A prospective purchaser that is or recently has been seriously deficient in contract performance shall be presumed not to be responsible, unless the Contracting Officer determines that the circumstances were beyond the purchaser's control and were not created through improper actions by the purchaser or affiliate, or that the purchaser has taken appropriate corrective action. Past failure to apply sufficient tenacity and perseverance to perform acceptably under a contract is strong evidence that a purchaser is not a responsible contractor. The Contracting Officer shall consider the number of contracts involved and extent of deficiency of each in making this evaluation;

d. The purchaser has a satisfactory record of integrity and business ethics;

e. The purchaser has or is able to obtain equipment and supplies suitable for logging the timber and for meeting the resource

protection provisions of the contract;

f. The purchaser is otherwise qualified and eligible to receive an award under applicable laws and regulations.

Bidders, by signing the bid form, certify that, to the best of bidder's knowledge the bidder will meet the requirements in 36 CFR 223.101, determination of purchaser responsibility, and, if awarded this contract, that bidder will complete the timber sale contract and any modifications thereof in accordance with its terms including requirements to purchase, cut, and remove included timber.

16. FALSE STATEMENTS ACT. Bidders, by signing the bid form, certify that they are aware that bidder is subject to the penalties prescribed in 18 U.S.C. 1001, Chapter 47, Fraud and False Statements (P.L. 104-45). The Act states "whoever, in any matter within the jurisdiction of any department or agency of the United States knowingly and willfully falsifies, conceals or covers up by any trick, scheme, or device a material fact, or makes any false, fictitious or fraudulent statements or representations, or makes or uses any false writing or document knowing the same to contain any false, fictitious or fraudulent statement or entry, shall be fined under this title or imprisoned not more than 5 years, or both."

17. DAMAGES. This contract shall be terminated for breach pursuant to paragraph 16, 19, and/or 21 of the bid form and the terms of the sample contract if: 1) bidder fails to execute a timber sale contract, furnish a downpayment, or furnish a satisfactory performance bond within 30 days of the award letter's date; or 2) bidder is found to have violated the False Statements Act in making any statement or certification on the bid form including not meeting purchaser responsibility requirements, and bidder has made a false statement. The bid guarantee shall be retained, in whole or in part, by the Forest Service to satisfy any damages that may be assessed.

18. SUSPENSION AND DEBARMENT CERTIFICATION. Non-procurement debarments and suspensions are governed by the Government-wide common rules (7 CFR 3017).

These rules require each timber sale purchaser, to submit a certification for itself, its principals, and its affiliates when bidding on sales. The bidder must designate its status regarding debarment, suspension, and other matters as specified on the bid form. The bidder, by signing the bid form, certifies this status. An explanation for not submitting a certification may be submitted. The Contracting Officer will determine whether the explanation provides sufficient reason for permitting participation in the bidding. Also, as a timber sale purchaser enters into transactions with subcontractors, these subcontractors must certify their eligibility. The certification titled "Subcontractor Certification Regarding Debarment, Suspension, Ineligibility, and Voluntary Exclusion" must be provided to subcontractors, but completed certifications are not required to be submitted with bid forms. Purchaser must keep these subcontractor certification forms on file for review by the Forest Service, if requested.

The certification forms and instructions for subcontractor transactions are provided as an addendum to the bid form.

19. OCCUPATIONAL SAFETY AND HEALTH ADMINISTRATION (OSHA) LOGGING REGULATIONS. Conduct of operations on this timber sale is subject to inspection for compliance with the logging operations regulations at 29 CFR 1910.266 by OSHA. This standard is applicable to the entire logging industry wherever logging operations occur. Information is available to assist purchasers to ensure compliance with the logging operations regulations during conduct of this timber sale from the U.S. Department of Labor, Occupational Safety and Health Administration, OSHA, 1648 Tri Park Way Appleton, WI 54914, 920-734-4521.

20. GENERAL. Corporations submitting an offer under this solicitation must include form AD-3030-FS, Representations Regarding Felony Conviction and Tax Delinquent Status For Corporate Applicants. Copies of this form may be obtained from the Forest Service office shown on page 1 of this prospectus or electronically at:
http://www.ocio.usda.gov/policy-directives-records-forms/forms-management/approved-computer-generated-forms.

BT8.21 CONTRACT TERM ADJUSTMENT
THIS SALE IS IN URGENT NEED OF HARVESTING. It would be in the bidder's best interest to make their own volume estimate and bid accordingly. It is also recommended that the Purchaser begin harvesting this sale as soon as possible to minimize volume loss. In order to facilitate the harvest of the high risk timber on this sale, contract term adjustments may be granted to the Purchaser on other green sales they might have on the Chequamegon-Nicolet National Forest. A showing of impact on these sales is a prerequisite to granting an adjustment and the number of days granted would depend on a case-by-case review and would reflect the time lost logging on this sale.

AT 17 MARKET RELATED CONTRACT TERM ADDITION PRODUCER PRICE INDEX
The Producer Price Index is the Wood Chips Index. This index was established to reflect expected marketing of a majority of the

products on this sale. Purchaser may request, prior to contract execution, the use of a different available index (Softwood Lumber Index or Hardwood Lumber Index) through a written request justifying why the change is being requested. This request will be forwarded to, and considered by, the Forest Supervisor for approval. If agreed upon, the change will become part of the executed contract. The index may not be changed once the contract has been executed.

BT6.81 PRODUCT IDENTIFICATION
This provision is not applicable to this contract and will be waived in writing by the Contracting Officer at the time of award.

AT2 VOLUME ESTIMATION AND UTILIZATION STANDARDS
Volume estimates were made from timber cruising that occurred over the 2014/15 winter. PLEASE NOTE THAT DUE TO THE SEVERITY OF THE BLOWDOWN CONDITION IN SOME AREAS OF THIS SALE, DIAMETERS AND HEIGHTS WERE OFTEN ESTIMATED BY SIGHT AND NOT WITH THE USE OF D-TAPES OR CLINOMETERS. ADDITIONALLY, HIGHER SAMPLING ERROR STANDARDS THAN ARE NORMAL FOR FOREST SERVICE ADVERTISED SALES WERE USED FOR THIS CONTRACT. Prospective bidders are urged to make their own volume estimates and to bid accordingly.

Hardwood Sawtimber volume estimates are the result of two slightly different cruising specifications for Hardwood Sawtimber: Eight foot sections cruised as Hardwood Sawtimber products with a small end DIB (Diameter Inside Bark) between 9.6" and 11.5" had a net scale in percent of gross scale of at least 95% (i.e. were considered to be at least 95% sound), while eight foot sections cruised as Hardwood Sawtimber products with a small end DIB over 11.5" DIB had a net scale in percent of gross scale of at least 50%. Estimated sawtimber CCF volumes can be converted to estimated MBF volumes by multiplying by 0.54; estimated pulpwood CCF volumes can be converted to estimated MBF volumes by multiplying by 0.633.

AT6 HIGH STUMPS
Maximum Stump Heights shall be no more the 12 inches, measured from the high side of the stump.

AT12 TERMINATION DATE
Termination Date is set for June 30, 2019.

AT13 NORMAL OPERATING SEASON
Normal Operating Season is January 01 to December 31.

CT2.353# DESIGNATION BY SPECIES AND DIAMETER
See attached documentation.

CT2.355# INDIVIDUAL TREES, CUT TREE MARKING
Individual trees to be cut are marked with indicated color above and below stump height in all or parts of the following Payment Unit(s). Areas of cut tree marking are shown on the Sale Area Map with the symbol "CTM".
See attached documentation.

CT5.103# APPROACHES TO SURFACED ROADS
Purchaser shall apply and maintain 6 inches of pit run gravel on all Temporary Road approaches to surfaced roads for a distance of 100 feet back from the surfaced road. Surfaced roads include those with any crushed rock or pavement surface. This requirement may be waived by the Forest Service if Temporary Road is used only during frozen ground conditions.

CT5.12# PURCHASER`S USE OF ROADS
Purchaser`s use of existing roads identified on Sale Area Map by the following codes is pohibited or subject to restrictive limitations unless agreed otherwise. Identified on Sale Area Map as symbol "P".
See attached documentation.

CT5.31# ROAD MAINTENANCE REQUIREMENTS
See attached documentation.

CT5.32# ROAD MAINTENANCE DEPOSIT SCHEDULE
In addition to stumpage, Purchaser will be charged $0.99/ccf for deferred maintenance resulting from hauling along Forest Road 136.

CT6.24# SITE SPECIFIC SPECIAL PROTECTION MEASURES
Special protection measures needed to protect known areas identified on Sale Area Map or on the ground include:
Cultural Resource Protection Measures: Payment Unit(s) requiring special measures are identified on Sale Area Map with an "SMA" label. Forest Service will identify exact locations requiring protection prior to the start of Purchaser`s operations within or near Payment

Unit(s).

CT6.314# OPERATING REQUIREMENTS
Purchaser's use of paint within Sale Area must be requested in writing and approved by the Contracting Officer.

Purchaser's operations that result in high levels of ground disturbance may require revegetation efforts on behalf of the Purchaser to establish acceptable erosion control. Location and timing of revegetation will be directed by the Forest Service to establish an acceptable grass or legume cover. Grass or legume seed, as well as any lime or fertilizer used, will need to be approved by the Forest Service in advance of application.

Purchaser's operations in all Payment Units are restricted to when soils are capable of adequately supporting equipment operations. Evidence of rutting, compaction, or erosion will be determining factors for not permitting or halting operations. Operations occurring during non-frozen conditions will require that no equipment be operated within 15 feet of any ephemeral pond or wetland.

Hauling of timber on Forest Service roads, including temporary roads, during times when load restrictions are in place for county or local roads, requires Forest Service approval.

All material not meeting minimum specification, as stated in AT2, shall be left on site.

Portions of Forest Trail 118G-102 that are not also shown on the Sale Area Map as an Existing Road, if used for hauling, will be considered Temporary Roads. Use of Trail for hauling may require pre-haul, during-haul, and/or post-haul maintenance, including removal and replacement of closure devices. Maintenance will be agreed upon with the Forest Service prior to use of Trails for hauling. At a minimum, trails must be maintained and restored to the condition they were prior to their use. Decking along these trails is only allowed at locations approved by the Forest Service, and should only be located along the straighter segments, not along curves. All slash resulting from Purchaser`s operation must be immediately removed from the trail corridor.

Snowplowing of any portion of Trail 118G-102 will be wide enough to allow for snowmobiles and logging trucks to pass at the same time, where possible, and that a sufficient amount of snow (4 inches) be left as a base for snowmobile use. Logging equipment and trucks using Trail will not exceed 10 miles per hour, and safety signs will be placed on both ends of the trail prior to use.

Hauling on Trail when it is open to the public will be prohibited on:
1. Memorial Day and Labor Day weekends (from noon on Friday to 6 a.m. on Tuesday)
2. July 4th holiday (from noon the Friday prior to July 4th to 6 a.m. the Monday following July 4th)
3. Christmas and New Year?s holidays (from noon on December 23rd to 6 a.m. January 2nd)
4. All other weekends (from noon Friday to 6 a.m. Monday).

CT6.42# SKIDDING AND YARDING REQUIREMENTS
The following is applicable across the Sale Area:
Protect existing downed logs greater than 10 inches in diameter that were present prior to storm damage during felling and skidding operations, when possible.

Skid trails that cross open system roads or trails shall be rendered inaccessible to vehicle traffic. This may require scattering and/or placement of berms.

Landings will not be located within the road template, including the ditch line and back slope, of Forest Road 136 and Forest Trail 118G-102. Forest Road 136 may be waived by the Forest Service if Purchaser provides written permission to do so from the Township responsible for maintaining the road bed.

CT6.63# TEMPORARY ROAD CLOSURES
Render Temporary Roads inaccessible to all motorized traffic, including all-terrain vehicles. Effectively preventing motorized vehicles from gaining access to any portion of Temporary Road may require obstructing access at several locations along the Temporary Road. At a minimum:

(1) Pile slash and/or stumps within Temporary Road corridor for a distance of at least 100 feet, beginning at the location of where berm will be established, as described below. Slash and/or stumps shall be in enough quantity so as to discourage vehicle traffic.

(2) Build a berm, where the Temporary Road intersects with the Existing Transportation System, four to five feet high using dirt, slash, and/or stumps to sufficiently block vehicle access.

Other methods of closure, if requested by the Purchaser, may be considered for approval by Forest Service. This closure will be required for final blocking when access is no longer required for Purchaser's operations. If at any time during the life of the sale and with prior Forest Service approval, constructed Temporary Roads that are not expected to be needed for use over an extended period of time may be blocked to normal vehicle traffic to protect road surface. Type of Temporary Road blocks must be agreed to by the Forest Service in advance of installation. The Forest Service has a limited number of gates that may or may not be available for Temporary Road blocks. Any gates used for temporary closure of Temporary Roads will need to be removed prior to continued use of Temporary Road. If furnished by the Forest Service, gate(s) returned to the Forest Service shall be in the same working condition as they were prior to use by Purchaser.

CT6.7# SLASH DISPOSAL MEASURES
All slash resulting from Purchaser's operations shall not lie outside of Payment Unit boundaries, and slash should not be left in any ephemeral ponds

SDZ(1) Slash resulting from Purchaser's operations within 100 feet from the cleared right-of-way (i.e. tree line) of Forest Road 136, 136ZL, 136ZI, 136ZD, 932H, 653, 653A, and Forest Trail 118G-102 shall lie no more than 2 feet above ground.

PROSPECTUS ATTACHMENT

Sale Name: Gates Salvage Continue

DESIGNATION BY SPECIES AND DIAMETER, CT2.352#

Payment Unit(s)	Designated Species	More than Stump Diameter /1	Less than Stump Diameter /1
01	All Species EXCEPT White Pine, Cedar, Tamarack and trees marked with ORANGE paint.	N/A	N/A
02	All Species EXCEPT White Pine, Cedar, Yellow Birch and trees marked with ORANGE paint.	N/A	N/A
03	All Species EXCEPT Pine, Tamarack and trees marked with ORANGE paint.	N/A	N/A
04	All Species EXCEPT Pine, Tamarack, Cedar, Hemlock, Yellow Birch, Oak, and trees marked with ORANGE paint.	N/A	N/A
05	All Species EXCEPT Pine, Tamarack, Cedar, Hemlock and trees marked with ORANGE paint.	N/A	N/A
06	All Species EXCEPT Pine, Tamarack, Cedar, Hemlock and trees marked with ORANGE paint.	N/A	N/A
07	All Species EXCEPT Conifers and trees marked with ORANGE paint.	N/A	N/A
08	All Species EXCEPT Pine, Tamarack, Cedar, Hemlock, Yellow Birch, Ironwood and trees marked with ORANGE paint.	N/A	N/A

/1 All trees containing at least one piece of Minimum Specifications, as stated in AT2

NOTE: "Dead trees", as stated on previous page of this provision, refers to those trees that were considered dead prior to the September 2014 storm event.

NOTE: White paint is known to exist in most units; Black paint is known to exist within or near some units – this paint has no contractual implications.

NOTE: There is no boundary paint along Forest Roads 136. The boundaries adjacent to these travel ways are considered to be the extent of merchantable trees.

NOTE: Old orange and blue paint is known to exist in Payment Unit 08. This paint has no contractual implication.

PROSPECTUS ATTACHMENT

Sale Name: Gates Salvage Continue

INDIVIDUAL TREES, CUT TREE MARKING, CT2.355#

see also STUMP MARKS, CT6.412

Payment Unit(s)	Paint Color
09	Green

NOTE: Old orange and blue paint is known to exist in this unit. This paint has no contractual implication.

ROAD MAINTENANCE REQUIREMENTS

FS-2400-6T Contracts (06/06)

CT5.31# Special Provisions

SECTION 3. ROAD MAINTENANCE REQUIREMENTS SCHEDULE

Contract Road Maintenance Requirements Summary

Road	Termini		Miles	Applicable Prehaul Road Maintenance Specifications								
	From	To		T-8110	T-8130	T-8340						
653	136	End	2.9	P	P	P						
653A	653	End	.2	P								
136ZD	136	End	0.3	P								
136ZL	136	Unit 2	0.4	P								
136ZI	136	End	0.1	P								
932H	118G-102	End	0.6	P								
118G-102	Temp Rd	932H	0.9	P								

Road	Termini		Miles	Applicable During Haul Road Maintenance Specifications								
	From	To		T-8110								
653	136	End	2.9	P								
653A	653	End	.2	P								
136ZD	136	End	0.3	P								
136ZL	136	Unit 2	0.4	P								
136ZI	136	End	0.1	P								
932H	118G-102	End	0.6	P								
118G-102	Temp Rd	932H	0.9	P								

Road	Termini		Miles	Applicable Post Haul Road Maintenance Specifications								
	From	To		T-8110	T-8620							
653	136	End	2.9	P								
653A	653	End	.2	P	P							
136ZD	136	End	0.3	P	P							
136ZL	136	Unit 2	0.4	P	P							
136ZI	136	End	0.1	P	P							
932H	118G-102	End	0.6	P								
118G-102	Temp Rd	932H	0.9	P								

P = Purchaser Performance Item, D = Deposit to Forest Service, D3 = Deposit to Third Party

ROAD MAINTENANCE REQUIREMENTS

FS-2400-6T Contracts (06/06)

CT5.31# Special Provisions

SECTION 4. ROAD MAINTENANCE SPECIFICATIONS

INCLUDED SPECIFICATIONS

Specification No.	Specification Title
T-8110	Maintenance Blading/Grading
T-8130	Spot Surface Course Placement/Replenishment
T-8340	Drainage Structure Maintenance
T-8620	Miscellaneous Maintenance

ROAD MAINTENANCE REQUIREMENTS

FS-2400-6T Contracts (06/06)

CT5.31# Special Provisions

T-8110 Maintenance Blading/Grading

DESCRIPTION

1.1 Maintenance Blading/Grading is keeping an aggregate surfaced Roadbed in a condition to facilitate traffic and provide proper drainage. It includes maintaining the Crown, Inslope or Outslope of the Traveled Way, Turnouts, and Shoulder; repairing Berms; blending approach road intersections; and cleaning Drainage Dips and Lead-off Ditches.

EQUIPMENT

2.1 The equipment required to shape, spread, and compact surfacing is listed below.

Road Number	Road Termini – From	Road Termini – To	Equipment Description
All	Entire Segment	Entire Segment	Dozer, or other Forest Service approved equipment

REQUIREMENTS

3.1 Maintenance Blading/Grading shall be performed to facilitate traffic and proper drainage before, during, or after Purchaser's use as required by Section 3. Road Maintenance Requirements Schedule.

3.2 The surface blading shall preserve the existing cross-section. Surface irregularities shall be eliminated and the surface left in a smooth, free-draining state needed to facilitate traffic. Surface Course Material which has been displaced to the Shoulders or Turnouts shall be returned to the Traveled Way. The blading operation shall be conducted to conserve Surface Material and to provide for a thorough mixing of the Material being worked.

3.3 On aggregate surfaced roads Material generated from back slope Sloughing and ditch cleaning shall not be blended with Surface or Base Course Material unless agreed otherwise

3.4 Roadway back slopes shall not be undercut.

3.5 Drainage Dips and Lead-off Ditches shall be cleaned and maintained to retain the existing line, grade, and cross-section.

3.6 Intersecting roads shall be bladed for a distance of 50 feet to assure blending of the surfaces.

3.7 Rocks or other Material remaining on the Traveled Way after the final pass that are 4 inches in diameter or larger shall be removed. The unsuitable Material shall be disposed of by side casting unless agreed otherwise. Side casting into streams, lakes, or water courses will not be permitted.

3.8 Material resulting from this activity shall not remain on or in structures, such as Culverts, cattle guards, ditches, bridges, and Drainage Dips.

3.9 Material resulting from this activity, plus any accumulated debris, shall be removed from roadway structures, such as concrete low-water crossings or fords.

ROAD MAINTENANCE REQUIREMENTS
FS-2400-6T Contracts (06/06)
CT5.31# Special Provisions

T-8130 Spot Surface Course Placement/Replenishment

DESCRIPTION

3.1 Spot Surface Course Placement/Replenishment includes Subgrade preparation, furnishing, hauling, spreading and shaping materials in accordance with the requirements.

MATERIALS

2.1 Surface Course Material will be in accordance with the subsection 3.2 of these specifications. Only commercial sources of aggregate will be accepted, except surfacing material may also be purchased from the government, where available, by filling out a form 2600, paying the required fees, and obtaining a permit.

REQUIREMENTS

3.1 Subgrade Preparation. Prepare Subgrade to receive Surface Course Material at locations as designated on-the-ground by the Forest Service on roads listed below. Prepare the Subgrade by shaping the Roadbed to approximately the original cross-section and consistent with adjacent sections.

3.2 Furnish, haul and spread Material at locations designated on the ground by the Forest Service (FS). Compact the aggregate by operating spreading and hauling equipment over the full width of each layer of the aggregate, or by other methods as specified below.

Road Number	Type Material	Finished Compacted Thickness Specified	Total Quantity (Tons or cu.yds.)	Compaction Method
653	Pit Run Gravel	6 inches	80	N/A
136ZD	Pit Run Gravel	6 inches	30	N/A
136ZL	Pit Run Gravel	6 inches	30	N/A
136ZI	Pit Run Gravel	6 inches	30	N/A

3.3 Variations. The Purchaser will be required to furnish weight tickets to the FS for each load of commercially obtained crushed aggregate prior to the final inspection. For aggregate purchased from the government, a count of truck loads will be required in addition to finished depth checks for the placed and compacted aggregate**.** Widths and lengths will be as staked or from schedule. When it is mutually agreed that all or part of the Surface Course Material is not needed, the estimated cost of surfacing not placed shall be charged to the Timber Sale Account in accordance with BT8.31.

ROAD MAINTENANCE REQUIREMENTS

FS-2400-6T Contracts (06/06)

CT5.31# Special Provisions

T-8340 Drainage Structure Maintenance

DESCRIPTION

3.2 This work consists of maintaining and/or installation/removal of Drainage Structures and related items such as: inlet and outlet channels, existing riprap, trash racks, necessary geotextiles, pipes, and drop-inlets.

MATERIALS

2.1 All Materials used in the maintenance and/or installation/removal of Drainage Structures shall conform by type and specification to the Material in the structure being maintained or as indicated in the subsection 3.3 below.

REQUIREMENTS

3.1 Drainage Structures and related items shall be cleared of all foreign Material deposited above the bottom of the structure and all vegetative growth which interferes with the water flow. Material removed that cannot be incorporated into maintenance work shall be uniformly placed on fill slopes unless agreed otherwise.

3.2 Perform maintenance to insure the proper functioning of the head walls, aprons, inlet assemblies, riprap, trash racks and other facilities related to the Drainage Structure.

3.3 Install/remove ditches, drainage dips, rock crossings and/or culverts as shown below, and as marked on the ground. Installation of structures shall not begin without the presence of a FSR unless agreed to in writing by the FSR.

Road Number	Location	Remove/Install	Type of Structure	Size	Quantity
653	2.1 Miles from 136	Install/Remove	Culvert	18” x 24’	1

3.4 Installation shall be in accordance with construction industry standards and practices.

3.3 Culverts designated for removal/disposal shall become the property of the Purchaser and shall be disposed of properly.

3.4 Temporary culverts provided by the USFS shall remain the property of the government.

3.7 Bridges. Any miscellaneous parts needing repair or replacement during normal use of any bridge during haul shall be considered maintenance. This includes minor items such as object markers, running planks that have loosened or cracked deck boards, or drainage structures which may become plugged. Bridge decks that are dirt and dust covered shall be cleaned to allow for proper drainage and for safety of the user.

ROAD MAINTENANCE REQUIREMENTS

FS-2400-6T Contracts (06/06)

CT5.31# Special Provisions

T-8620 Miscellaneous Maintenance

DESCRIPTION

1.1 Maintenance of miscellaneous structures includes cattle guards, gates (this includes all types of closure devices such as logs, rocks, dirt berms, dirt and slash berms, metal gates, etc), signs, and other similar structures that have been previously installed to insure safe and efficient operation of the road.

MATERIALS

2.1 Any Materials needed in the maintenance of miscellaneous structures shall be similar in type and quality to the Material in the structure being maintained.

REQUIREMENTS

3.1 Cattle guards. Loose rails shall be welded or bolted back in place.
Excess Material carried into the cattle guard shall be removed when drainage is blocked or when it reaches six inches from the bottom of the cattle guard frame. Drainage into and from the cattle guard shall be kept open.

3.5 Gates (and other closure devices). Gates shall be kept in good repair and made to swing easily. Hinges or latches shall be repaired if not operating properly. Brush and debris shall be removed from within the swinging radius. Weathered berms or wood piles shall be reconstructed to a height which discourages use and blocks the road.

3.6 Signs. Any signs needing repair or replacement shall be installed per sign placement detail or MUTCD direction. All roads shall have legible sign numbers. ML 3-5 roads shall have

3.7 horizontal numbering and ML 1-2 roads shall have vertical numbers. The material used shall be as directed by the Forest Service Representative. All new signs must meet retroreflectivity requirements.

Road Number	Road Name	Location	Remove/ Install	Type of Item	Size	Quantity
653	653	Approx. 0.1 miles east of intersection with FR 653B	Install	Gate*	N/A	1
932H	932H	At Intersection with FT 118G-102	Install	Gate*	N/A	1
136ZI	136ZI	20 feet from intersection of 136	Remove/ Install	Rock/Earth berm	See CT6.63#	1
136ZD	136ZD	20 feet from intersection of 136	Remove/ Install	Rock Earth berm	See CT6.63#	1
136ZL	136ZL	20 feet from intersection of 136	Remove/ Install	Rock Earth berm	See CT6.63#	1
653A	653A	20 feet from intersection of 653	Remove/ Install	Rock Earth berm	See CT6.63#	1

*See Attached Specifications on Following Pages

ROAD MAINTENANCE REQUIREMENTS

FS-2400-6T Contracts (06/06)

CT5.31# Special Provisions

T-8620 Miscellaneous Maintenance (continued)

Gate Specifications, page 1 of 8

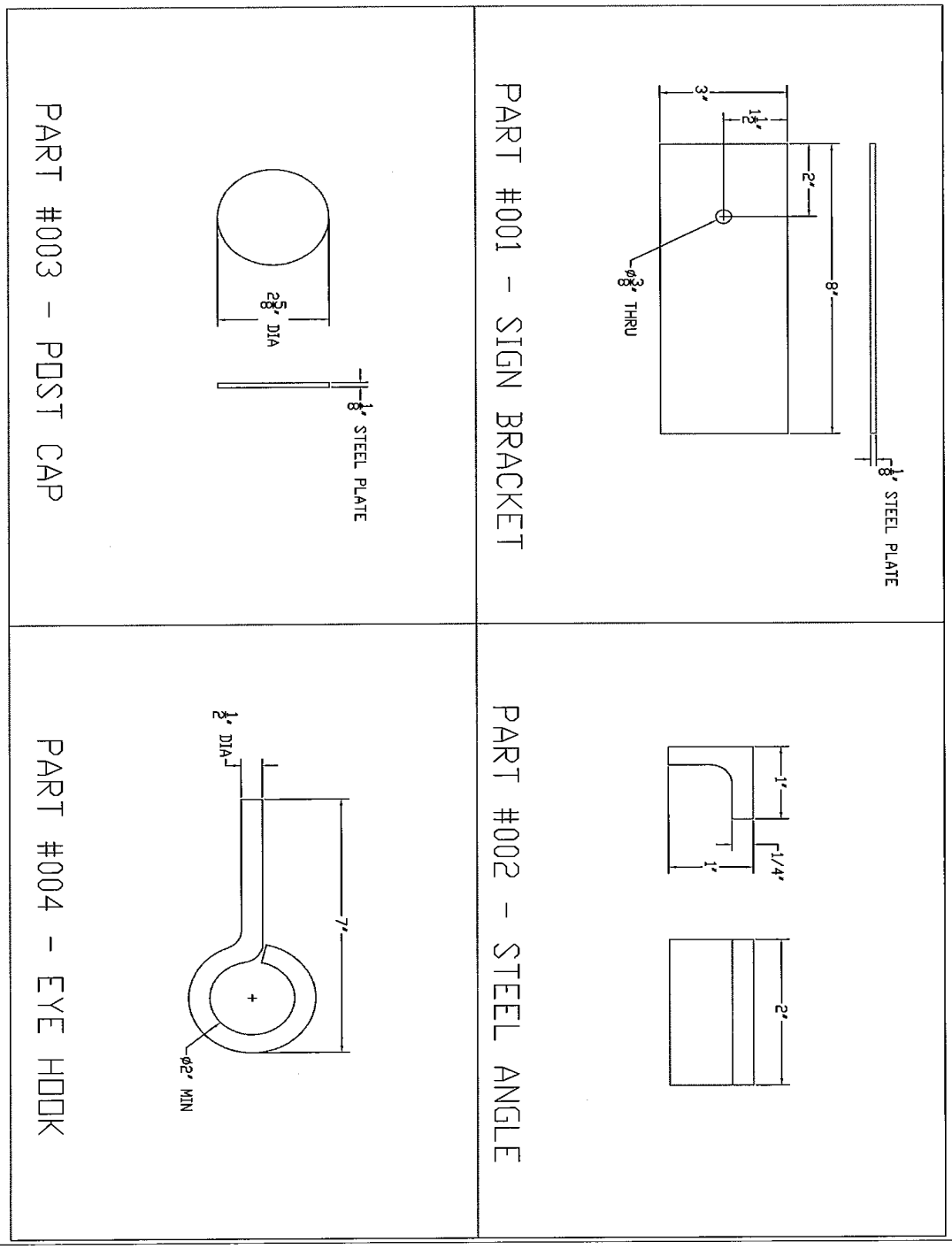

ROAD MAINTENANCE REQUIREMENTS

FS-2400-6T Contracts (06/06)

CT5.31# Special Provisions

T-8620 Miscellaneous Maintenance (continued)

Gate Specifications, page 2 of 8

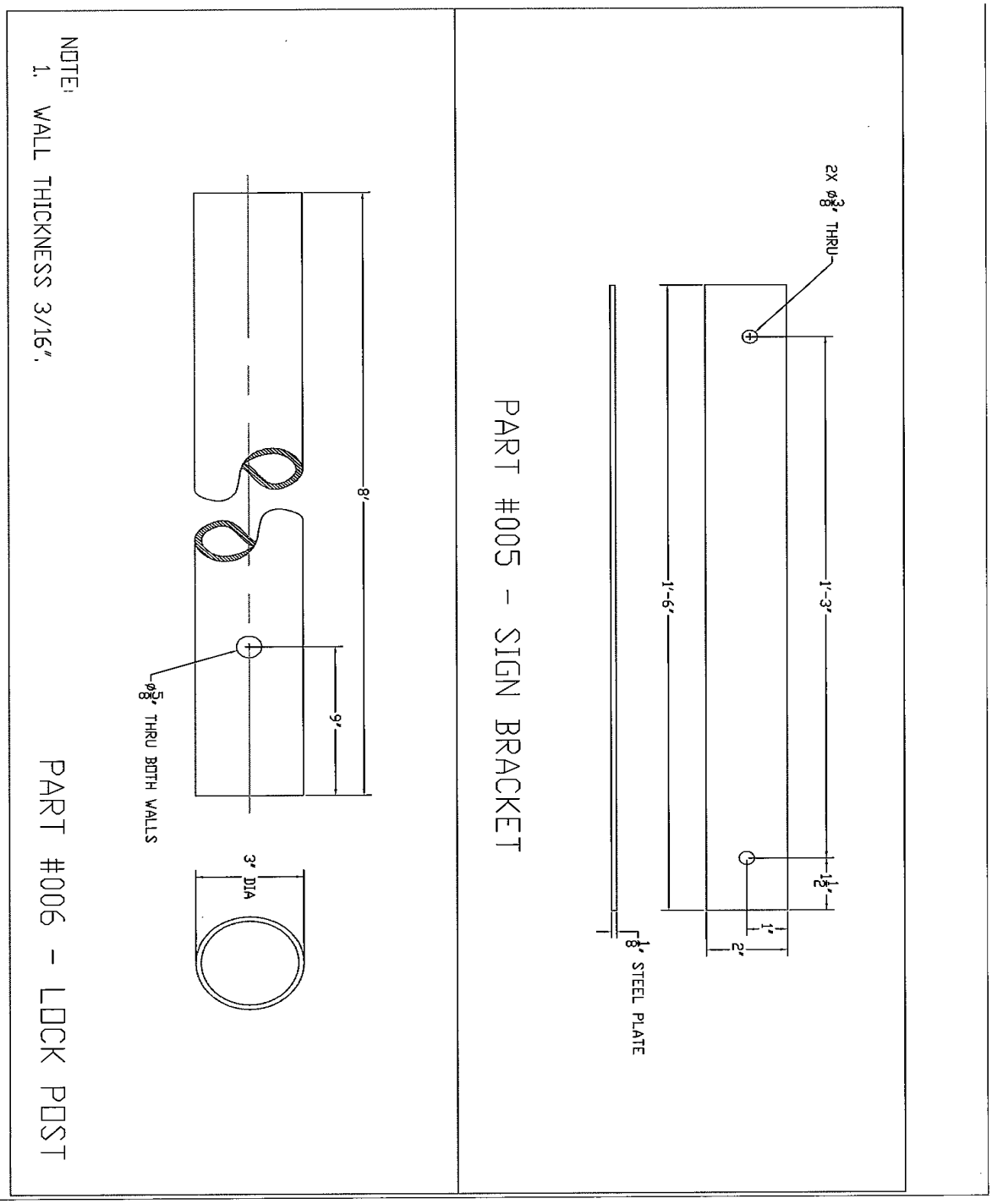

ROAD MAINTENANCE REQUIREMENTS
FS-2400-6T Contracts (06/06)
CT5.31# Special Provisions

T-8620 Miscellaneous Maintenance (continued)

Gate Specifications, page 3 of 8

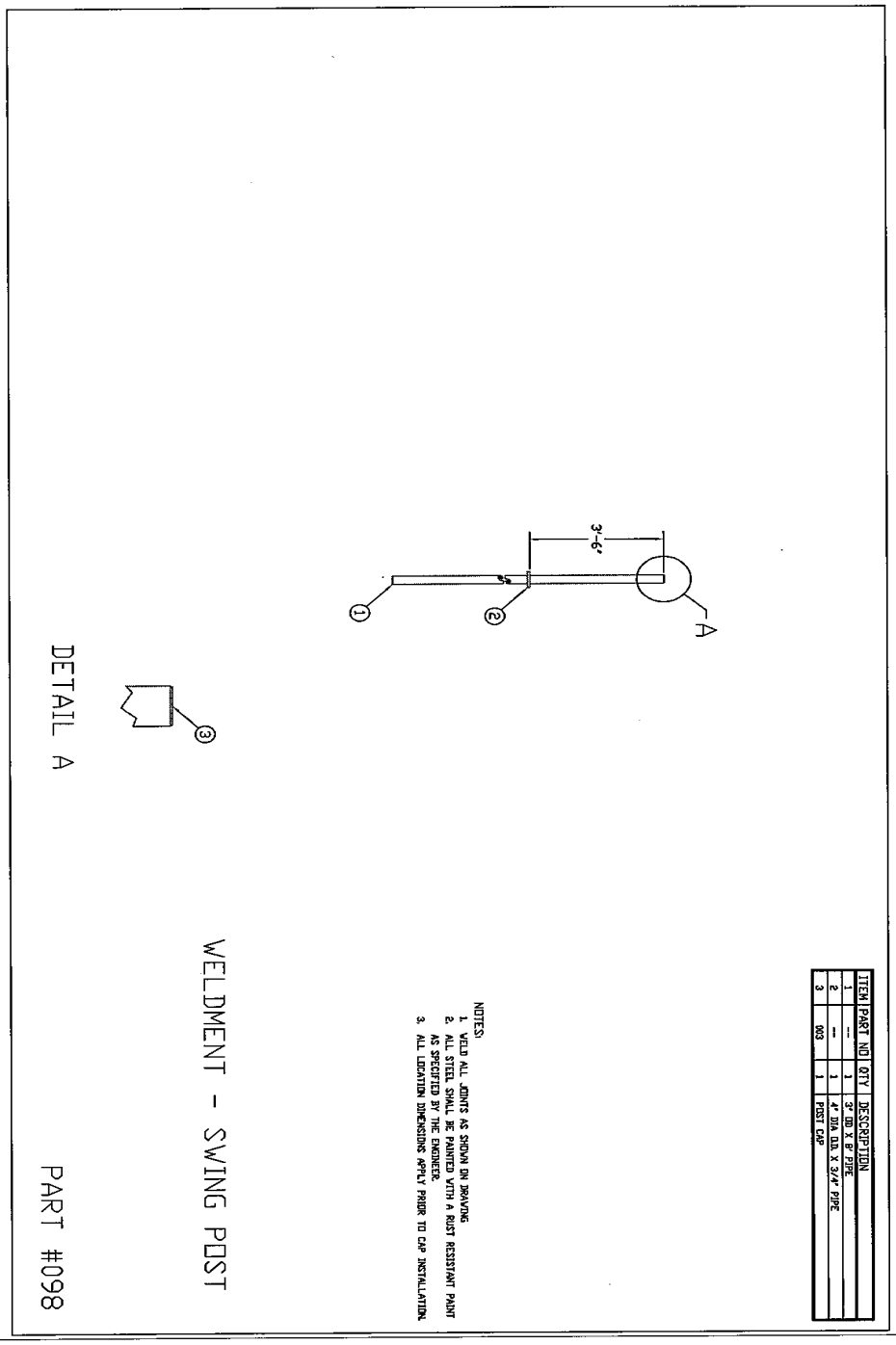

ROAD MAINTENANCE REQUIREMENTS

FS-2400-6T Contracts (06/06)

CT5.31# Special Provisions

T-8620 Miscellaneous Maintenance (continued)

Gate Specifications, page 4 of 8

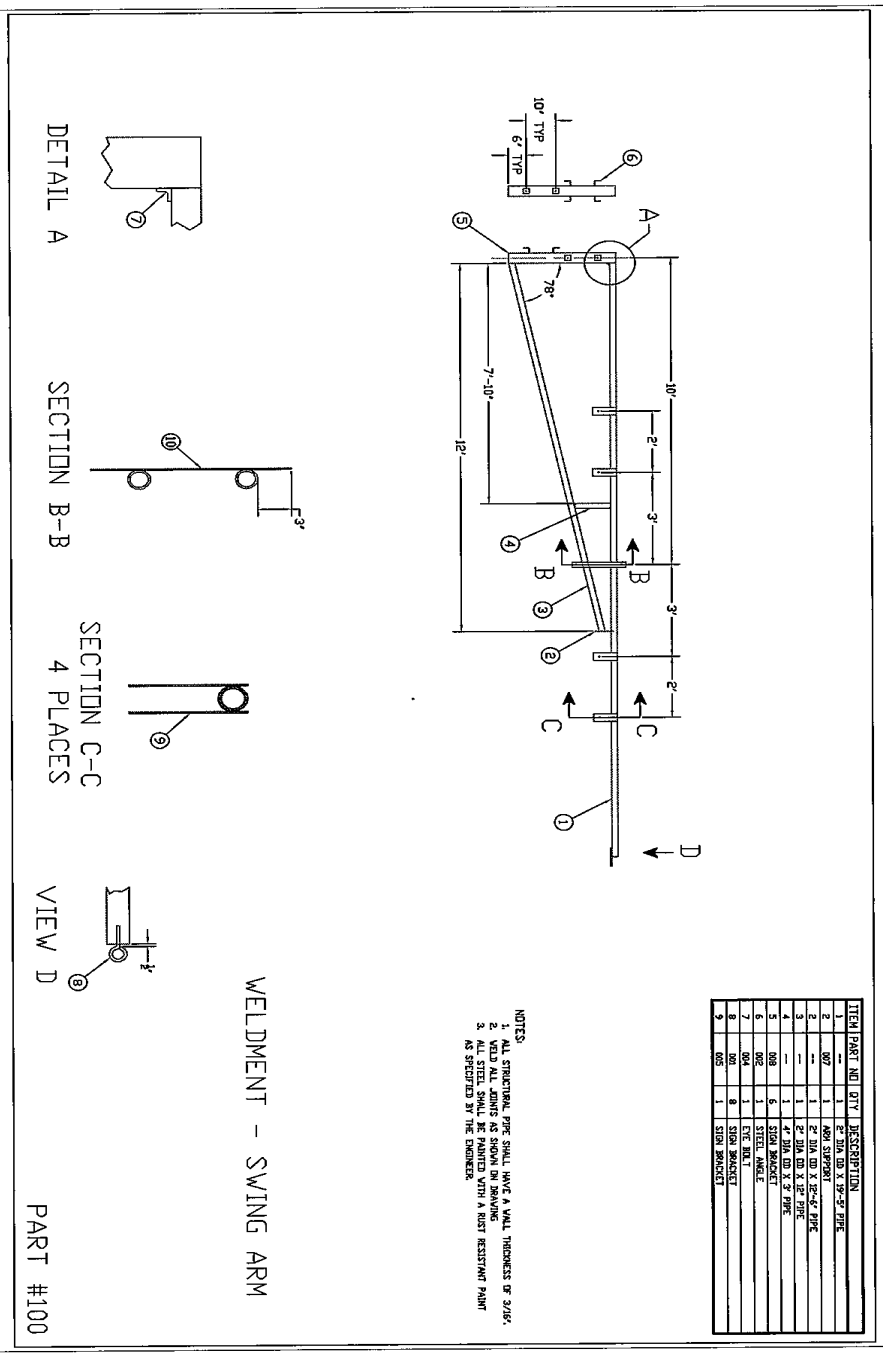

ROAD MAINTENANCE REQUIREMENTS

FS-2400-6T Contracts (06/06)

CT5.31# Special Provisions

T-8620 Miscellaneous Maintenance (continued)

Gate Specifications, page 5 of 8

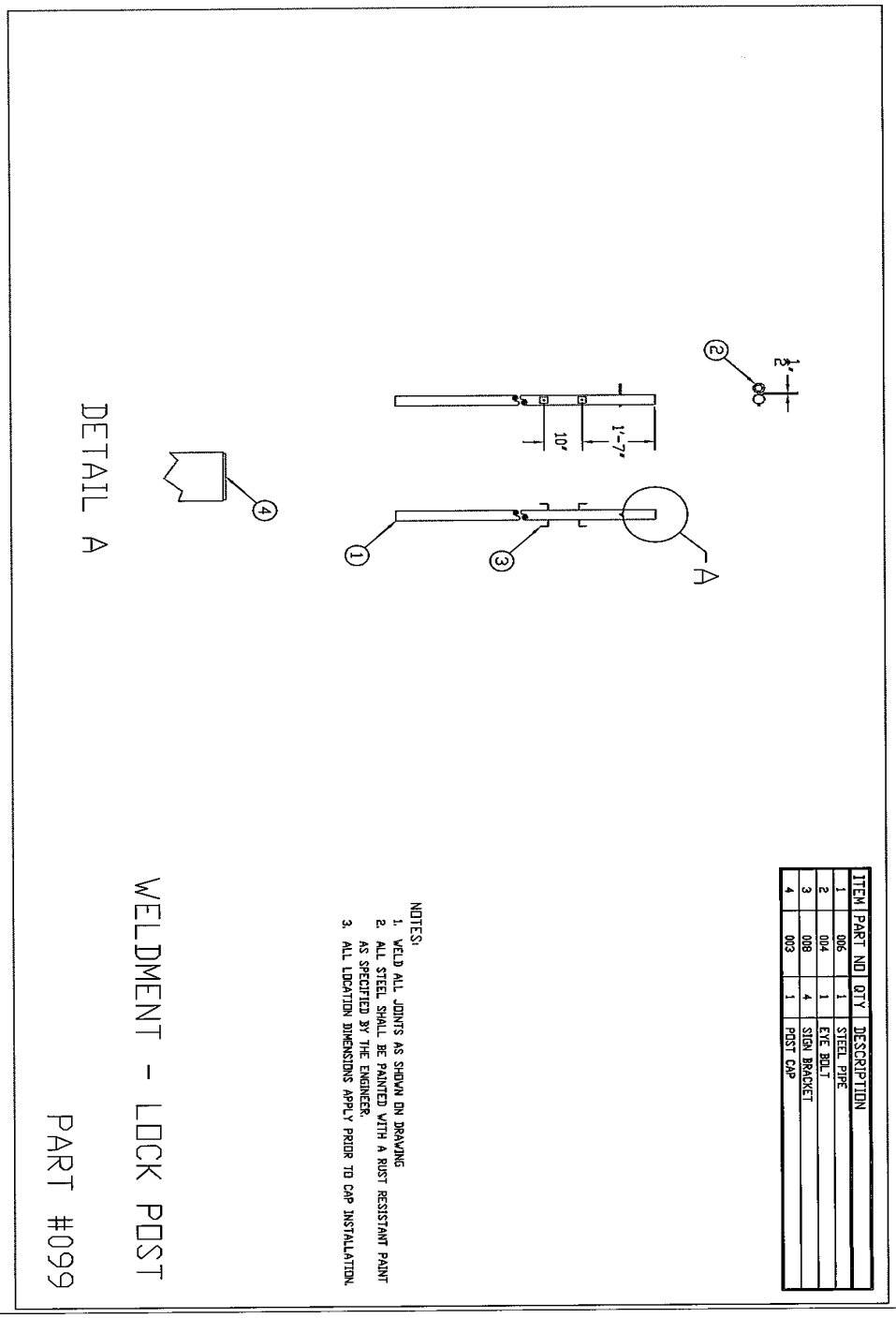

ROAD MAINTENANCE REQUIREMENTS

FS-2400-6T Contracts (06/06)

CT5.31# Special Provisions

T-8620 Miscellaneous Maintenance (continued)

Gate Specifications, page 6 of 8

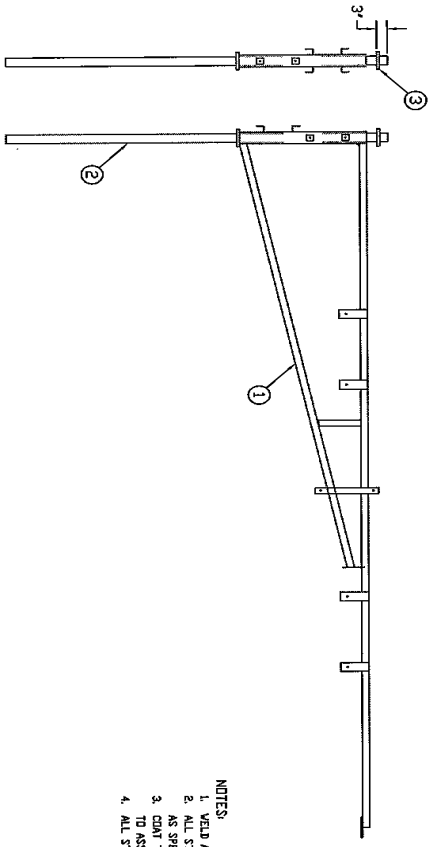

ITEM	PART NO	QTY	DESCRIPTION
1	098	1	SWING POST
2	100	1	SWING ARM
3	--	1	4" DIA OD X 3/4 PIPE

NOTES:
1. WELD ALL JOINTS AS SHOWN ON DRAWING
2. ALL STEEL SHALL BE PAINTED WITH A RUST RESISTANT PAINT AS SPECIFIED BY THE ENGINEER.
3. COAT THE MATING SURFACES OF ITEMS 1 AND 2 WITH GREASE PRIOR TO ASSEMBLY.
4. ALL STRUCTURAL PIPE SHALL HAVE A WALL THICKNESS OF 3/16".

GATE SWING ASSEMBLY

PART #101

ROAD MAINTENANCE REQUIREMENTS

FS-2400-6T Contracts (06/06)

CT5.31# Special Provisions

T-8620 Miscellaneous Maintenance (continued)

Gate Specifications, page 7 of 8

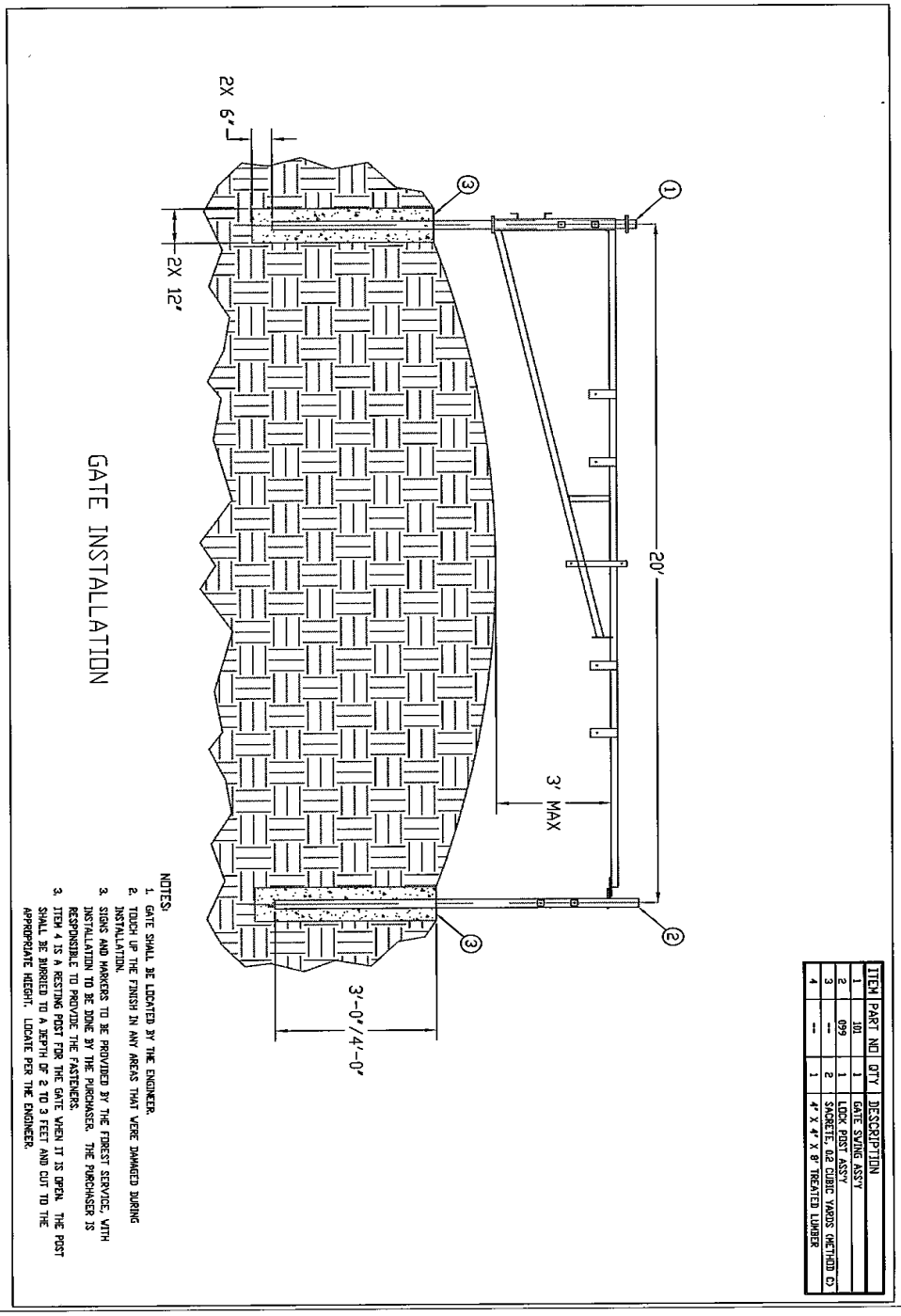

ROAD MAINTENANCE REQUIREMENTS

FS-2400-6T Contracts (06/06)
CT5.31# Special Provisions

T-8620 Miscellaneous Maintenance (continued)

Gate Specifications, page 8 of 8

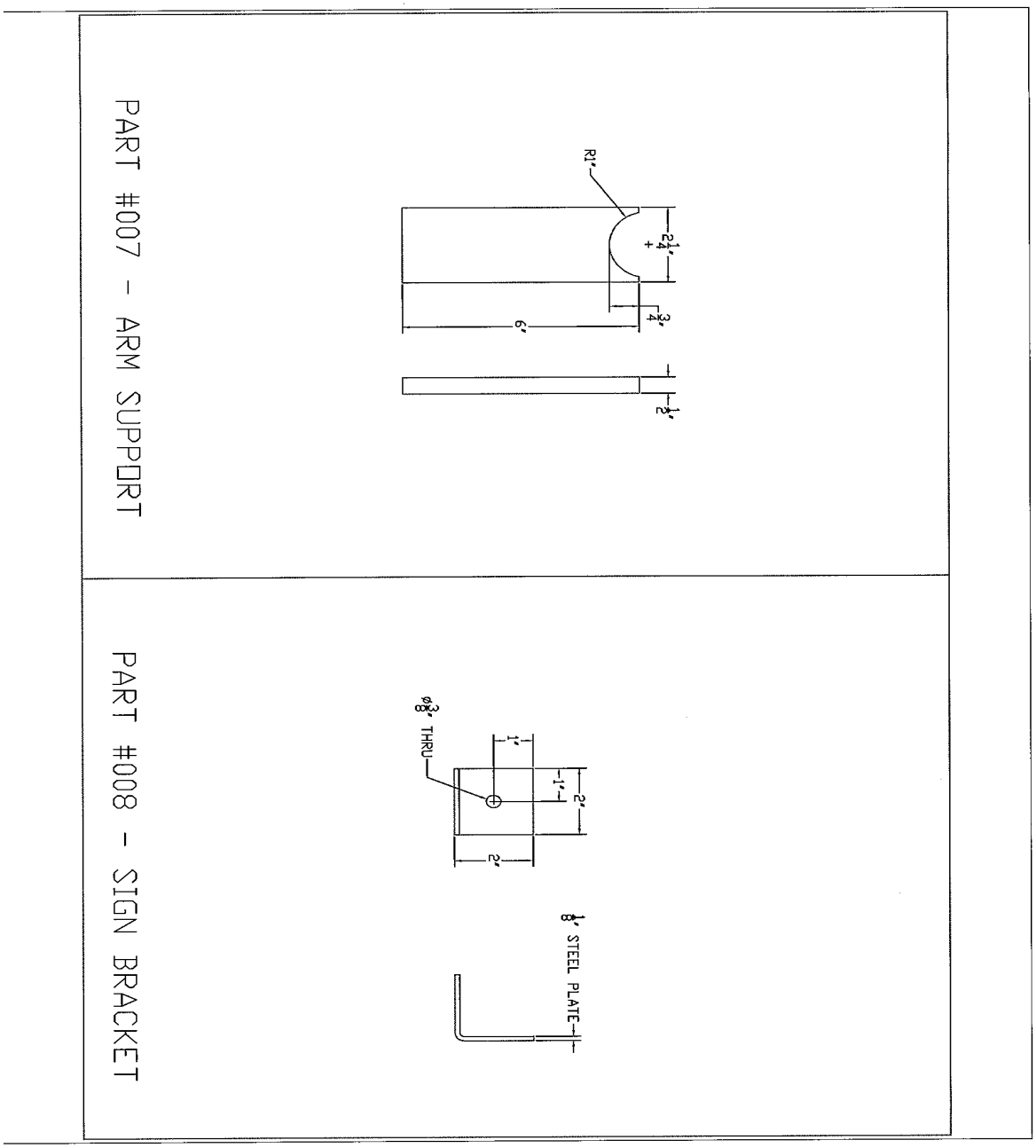

PROSPECTUS ATTACHMENT

Continue

USE OF ROADS BY PURCHASER CT5.12#

Road Number	Road Name	Termini		Map Legend	Description of Restrictions
		From	To		
136ZC	136ZC	136	End	P	Use Prohibited

USDA - Forest Service

BID FOR ADVERTISED TIMBER
(Reference FSM 2430, FSH 2409.18, Chapter 50)

1. Sale Number: 11513	2. Date and Time of Bid Opening: 01/26/2016 11:00 AM	3. Opened By:	4. In the Presence of:

5. Sale Name: Gates Salvage		8. Type of Bid:
6. National Forest: Chequamegon/Nicolet	7. Ranger District: Medford/Park Falls	a. [X] Sealed Bid b. [ ] Confirmation of Oral Bid

9. To: (Title and address of Sale Officer receiving bids)	10. Name of Newspaper:	11. Date Published:
Park Falls District Office Sale Officer 1170 4th Ave. S. Park Falls, WI 54552	The Park Falls Herald	01/07/2016
	12. City:	13. State:
	ParkFalls, WI 54552	Wisconsin

INSTRUCTIONS TO SALE OFFICER: Verify that TIM has completed applicable blanks before sending to prospective Bidders. Attach copy of sale advertisement. Entries are required in blocks 1, 2, 5-7, 8a or b, 9-13, 14a, b, c, d, e, f, h, & i, 15a, 19, 20, 27; and instruction 13 in all sales. Strike out spaces for entries in one or more columns h, or i, if not applicable to the sale.

*************In Response to the Notice of Sale published in the newspaper specified above, and subject to the conditions attached hereto, the following bid is submitted and shall constitute a Firm Offer:************

14. Bid Information:

Species (a)	Product (b)	Unit of Measure (c)	Estimated Quantity (d)	Rates Per Unit of Measure: Base Rate (e)	Advertised Rate (f)	Bid Rate (g)	Additional Deposits for Slash Disposal (h)	Base Indices (i)
Mixed Conifer	Sawtimber	CCF	454.00	$10.04	$30.51		$0.00	N/A
Mixed Hardwood	Sawtimber	CCF	254.00	$19.03	$55.32		$0.00	N/A
Aspen	Pulpwood	CCF	5,101.00	$8.36	$25.03		$0.00	N/A
Mixed Conifer	Pulpwood	CCF	1,028.00	$5.81	$16.68		$0.00	N/A
Mixed Hardwood	Pulpwood	CCF	2,017.00	$8.78	$26.39		$0.00	N/A

15. BID GUARANTEE:

a. The minimum guarantee which must accompany this bid is $22,600.00.

b. The form of guarantee accompanying this bid is a(n) _____in the amount of $ _____(See Instruction 6 for acceptable forms of payment.)

16. BIDDER RESPONSIBILITY CERTIFICATION: Subject to the penalties prescribed in 18 USC 1001, Bidder certifies, by signing this bid form, that to the best of Bidder's knowledge that the following representations are accurate and complete:

a. That the Bidder has not employed or retained any company or person (other than a full-time bona fide employee working solely for the Bidder) to solicit or secure a contract for this timber or forest product.

b. That the Bidder has not paid or agreed to pay any company or person (other than a full-time bona fide employee working solely for the Bidder) any fee, commission, percentage or brokerage fee, contingent upon or resulting from the award of contract for this timber or forest product, and agrees to furnish information relating thereto as requested by the Contracting Officer.

c. That the Bidder meets the requirements in 36 CFR 223.101 regarding determination of purchaser responsibility.

d. That if awarded this contract that Bidder will complete the timber sale contract to its terms and any modifications thereof including requirements to purchase, cut, and remove the included timber or forest product by the termination date.

16a. BIDDER CERTIFICATION REGARDING DEBARMENT, SUSPENSION, AND OTHER RESPONSIBILITY MATTERS: Subject to the penalties prescribed in 18 USC 1001, Bidder certifies, by signing this bid form, that to the best of Bidder's knowledge that the following representations are accurate and complete.

a. That the Bidder and its principals are not presently debarred, suspended, proposed for debarment, declared ineligible, or voluntarily excluded from timber sales (covered transactions) by any Federal department or agency.

b. That the Bidder and its principals have not within a 3-year period preceding this bid been convicted of or had a civil judgment rendered against them for commission of fraud or a criminal offense in connection with obtaining, attempting to obtain, or performing a public (Federal, State, or local) transaction or contract under a public transaction; violation of Federal or State antitrust statutes or commission of embezzlement, theft, forgery, bribery, falsification or destruction of records, making false statements, or receiving stolen property.

c. That the Bidder and its principals are not presently indicted for or otherwise criminally or civilly charged by a governmental entity (Federal, State, or local) with commission of any of the offenses enumerated in paragraph b of this certification.

d. That the Bidder and its principals have not within a 3-year period preceding this bid had one or more public transactions (Federal, State, or local) terminated for breach or default of a timber or forest product contract.

Bidders that cannot certify this block, in whole or in part, shall submit an explanation with their bid (See Instruction 16.).

16b. BIDDER INFORMATION REQUIREMENTS: Subject to the penalties prescribed in 18 USC 1001, Bidder certifies, by signing this bid form, that to the best of Bidder's knowledge that the following information is accurate.

a. That the Bidder [ ] has, [ ] has not participated in a previous contract subject to the provision of section 202 of Executive Order 11246 (Non-discrimination in Employment) of 9/24/65, as amended; and that the Bidder [ ] has, [ ] has not submitted required compliance reports under such previous contracts.

b. That the Bidder together with its affiliates employs the following number of persons and is classified as:
[ ] 1-25 [ ] 26-500 [ ] Over 500 **and** a: [ ] Manufacturer [ ] Nonmanufacturer of sawtimber

17. CERTIFICATE OF INDEPENDENT PRICE DETERMINATION: Subject to the penalties prescribed in 18 USC 1001, Bidder certifies and represents, by signing this bid form, that the following representations are accurate and complete:

a. By submission of this bid each Bidder also certifies, and in the case of a joint bid each party thereto certifies as to its own organization, that in connection with this sale:

(1) The prices in this bid have been arrived at independently, without consultation, communication, or agreement, as to any matter relating to such prices with any other Bidder or with any potential competitor;
(2) The prices which have been quoted in this bid have not been knowingly disclosed by the Bidder and will not knowingly be disclosed by the Bidder prior to opening of bid, directly or indirectly to any other Bidder or to any potential competitor; and
(3) No attempt has been made or will be made by the Bidder to induce any other person or firm to submit or not to submit a bid.

b. Each person signing this bid or proposal certifies that:
(1) The Signer is the person in the Bidder's organization responsible within that organization for the decision as to the prices bid herein and that the Signer has not participated, and will not participate, in any action contrary to a(1) through a(3) above; or
(2) The Signer is not the person in the Bidder's organization responsible within that organization for the decision as to prices bid herein but that the Signer has been authorized in writing to act as agent for the persons responsible for such decision in certifying that such persons have not participated, and will not participate, in any action contrary to a(1) through a(3) above, and as their agent does hereby so certify; and that the Signer has not participated, and will not participate, in any action contrary to a(1) through a(3) above.

c. A bid will not be considered for award where any portion of a or b above has been deleted or modified. Where these provisions have been deleted or modified, the bid will not be considered for award unless Bidder furnishes with the bid a sworn statement which sets forth in detail the circumstances of the disclosure and the Chief, Forest Service, or the Chief's designee, determines that such disclosure was not made for the purpose of restricting competition.

18. ROAD CONSTRUCTION OPTION:
Not applicable.

19. CONTRACT, DOWNPAYMENT, AND BOND: The Bidder whose bid is accepted will, within 30 days of the award letter's date, or any written extension thereof by the Forest Service, execute a timber sale contract which shall be provided by the Forest Service and be based on the sample contract referenced in the prospectus. Simultaneously, Bidder shall submit a downpayment and furnish a satisfactory performance bond, in accordance with the provisions of such timber sale contract, in the penal sum as prescribed in the prospectus for this sale, and otherwise complete the process described on this form and pages attached hereto. Simple interest shall be assessed at then Current Value of Funds Rate for a late downpayment. Bidder agrees that its failure to comply with this paragraph shall result in a termination of this contract for breach under provisions of instruction 9 of the Instructions to Bidders portion of this form.

20. DOWNPAYMENT: Pursuant to 36 CFR 223.49, the Bidder to whom award is made must make a downpayment at the time the contract is signed by the Bidder and returned to the Forest Service in the amount of:
[X] Ten percent of the advertised value, plus 20 percent of the total bid premium.
[ ] ___ percent or the advertised value, plus ___ percent of the total bid premium, based on the Chief's determination that this amount is necessary to deter speculation.
NOTICE: The indicated downpayment amount shall be increased to 20 percent of the total advertised value and 40 percent of the total bid premium if the Contracting Officer determines that the Bidder meets the criteria for additional downpayment established by 36 CFR 223.49.

21. FIRM OFFER: Subject to the penalties prescribed in 18 USC 1001, the Bidder hereby agrees not to withdraw this bid after the bid opening. Signing this bid form binds the Bidder to accept award under the terms of the sample contract and this bid form if its bid is accepted within 90 days after bid opening. The period for acceptance may be extended by written notice from Bidder. If Bidder qualifies as a small business and elects road construction by the Forest Service, then the Bidder agrees that its offer shall remain open through the period stated in the prospectus although that period may exceed 90 days.

22. TERMS OF BIDDER'S OFFER: Bidder certifies and represents that the Bidder has read and understands each and every provision of this bid form (together with any attachments thereto) and the sample sale contract. The Bidder agrees that it assumes the responsibility to clarify any questions before signing this form. The Bidder agrees that the written provisions of this bid form (together with any attachments) and the sample sale contract constitute the entire agreement of the parties until a written contract is executed and neither the bid form (and any attachments) nor the sample contract can be orally modified. The Bidder expressly adopts the terms of this bid form and the sample contract as material parts of the Bidder's offer for the advertised timber or forest product.

23. DISCLAIMER OF ESTIMATES AND BIDDER'S WARRANTY OF INSPECTION: Before submitting this bid, the Bidder is advised and cautioned to inspect the sale area, review the requirements of the sample contract, and take other steps as may be reasonably necessary to ascertain the location, estimated volumes, construction estimates, and operating costs of the offered timber or forest product. Failure to do so will not relieve the Bidder from responsibility for completing the contract.

The Bidder warrants that this bid is submitted solely on the basis of its examination and inspection of the quality and quantity of the timber or forest product offered for sale and is based solely on its opinion of the value thereof and its costs of recovery, without any reliance on Forest Service estimates of timber or forest product quality, quantity or costs of recovery. Bidder further acknowledges that the Forest Service: (i) expressly disclaims any warranty of fitness of timber or forest product for any purpose; (ii) offers this timber or forest product as is without any warranty of quality (merchantability) or quantity and (iii) expressly disclaims any warranty as to the quantity or quality of timber or forest product sold except as may be expressly warranted in the sample contract.

The Bidder further holds the Forest Service harmless for any error, mistake, or negligence regarding estimates except as expressly warranted against in the sample contract.

24. CERTIFICATION OF COMPLIANCE WITH EXPORT AND SUBSTITUTION RESTRICTIONS: The Bidder certifies, by signing this bid form, that the Bidder is in compliance with applicable prohibitions against export and substitution prescribed in the Forest Resources Conservation and Shortage Relief Act of 1990, as amended (16 USC 620, *et seq.*). In Alaska, exports of logs, cordwood or primary products derived from included timber may not be transported from Alaska without Regional Forester approval (See instruction 15).

25. SMALL BUSINESS SET-ASIDE SALE:
Not applicable.

26. SPECIAL SALVAGE SALE TIMBER SALE PROGRAM SET-ASIDE SALE:
Not applicable.

27. CERTIFICATION OF NON-AFFILIATION:
Not applicable.

28. CERTIFICATION OF AFFILIATION: The Bidder certifies that a complete listing of Bidder's affiliates who are primarily engaged in the logging of forest products is included with this bid: (Add additional pages if needed; See Instructions 10 and 14):

Full Name of All Partners & Affiliates (Type or Print)	When requested by Contracting Officer in notice of tentative award, bidder agrees to furnish tax identification number of each partner and affiliate listed herein.

Before signing this bid, review the attached instructions to Bidders and fill in the applicable blanks in boxes 14g, 15b, 16b, 18, 28 and 29.

Name of Bidder: (Type or Print)	By: (Signature in ink)	
Business Name: (Type or Print)	Title: (Type or Print)	Date:

Public reporting burden for this collection is estimated to be between 20 and 50 hours per response, including time for reviewing instructions, searching existing data sources, gathering and maintaining the data needed, and completing and reviewing the collection of information. Under the Paperwork Reduction Act of 1995, an agency shall not conduct or sponsor, and no persons are required to respond to, a collection of information unless it displays a valid OMB control number. The valid OMB control number for this collection of information is 0596-0066.

Deposits will be returned to unsuccessful Bidders by certified mail unless deposits are returned personally.

Receipt for Returned Deposits:

Check Number_____ in the amount of $_____dated _____ was returned to

_____

Signature: _____ Date:_____

29. PERSONAL IDENTIFICATION INFORMATION:
Business Name, Address and Phone Number (Include Zip Code and Area Code) (Type or Print)

Tax Identification Number: _____

Instructions to Forest Officer: Remove and shred this page after entering bidder's PII in the appropriate database.

INSTRUCTIONS TO BIDDERS

1. BIDDER'S QUALIFICATIONS: Before a bid is considered for award, the Bidder may be required to submit a statement regarding the Bidder's previous experience in performing comparable work, business affiliates and technical organizations, financial resources, intended product processing facilities and its timber exporting history.

2. PREPARATION OF SEALED BIDS: Bids shall be manually signed, bid prices entered into each block of the 'Bid Rate' column (block 14g) for all material subject to bidding and all fill-in blanks completed. The bid rates in column 14g for each species must be equal to or greater than the advertised rate for each species in column 14f. If erasures or other changes appear on the forms, the person signing the bid must initial each erasure or change.

3. SUBMISSION OF SEALED BIDS: Sealed bids, with the accompanying bid guarantee, must be submitted to the Sale Officer, designated by the advertisement as the receiving officer, at or prior to the time established by the advertisement. Such bids must be enclosed in a sealed envelope addressed to the designated receiving officer. The envelope should show on the outside (a) that it is a "Bid for Timber," and (b) the sale name or number, and the date and time of opening bids as shown by the advertisement. Bids received after the time specified in the sale advertisement are late bids, Forest Service Handbook 2409.18, Chapter 60 will govern acceptance of such bids.

4. PUBLIC OPENING OF SEALED BIDS: Sealed bids will be publicly opened and posted at the time and place set for opening in the advertisement.

5. ORAL AUCTION BIDDING: Not applicable.

6. BID GUARANTEE: A bid guarantee in the form of a bid bond on form FS-6500-13 (4/82 or later version), certification of annual bid bond allocation on form FS-6500-13a (4/82 or later version), an irrevocable letter of credit, the format of which has been pre-approved by the Forest Service Regional Forester, a certified check, official bank check, bank draft, cashier's check, bank or postal money order payable to the Forest Service, USDA; or cash, in an amount no less than that specified in item 15(a), must accompany each sealed bid. Failure to submit an acceptable bid guarantee with the sealed bid will require rejection of the bid as non-responsive unless there is no other acceptable bid, or unless the Forest Service, in its sole discretion, decides to briefly delay a sale advertised for sealed bids followed by oral bids in order to allow any Bidder to cure any deficiency in its bid guarantee prior to oral bidding. Bid bonds must be accompanied by a power of attorney indicating that the person signing the bond for the surety has the power to do so. The Bidder acknowledges that bid guarantee shall be retained, in whole or in part, by the Forest Service to satisfy any damages that may be assessed if the bid is accepted and Bidder subsequently fails to furnish a cash downpayment or return the executed contract and performance bond as required. (See instruction 9.) The Bidder also acknowledges that the bid guarantee may be retained, in whole or in part, if the bid is accepted and Bidder has failed to abide by the terms of the bid or sample contract or violates the False Statements Act including not meeting purchaser responsibility requirements in 36 CFR 223.101, or Bidder has made a false statement (block 16). Otherwise, the bid guarantee shall be returned to each Bidder whose bid is not accepted.

7. AWARD OF CONTRACT: Award of the contract will be made to that responsible Bidder whose bid, conforming to the invitation for bids, is most advantageous to the United States on the basis of total value. The Government may, when in its interest, reject any or all bids or waive any informality in bids received. A written award mailed (or otherwise furnished) to the successful Bidder shall be deemed to result in a binding contract without further action by either party. If timber is advertised as set-aside for competitive bidding by small businesses, award will be made to the highest Bidder qualified as a small business and who has not been determined by the SBA to be ineligible for preferential award of set-aside sales. If there are no qualified small business Bidders, Forest Service will advertise this sale without restrictions on bidder size. All small businesses qualified, as a small business by the SBA, shall be required to follow the small business set-aside provisions of the sample contract.

If an appeal or lawsuit is filed challenging the decision to award this contract or upon determination by the Regional Forester that conditions existing on this timber sale are the same as, or nearly the same as, conditions existing on other timber sale(s) in appeal or litigation, Contracting Officer may delay award or reject all bids. If delay in award is for 10 days or more during Normal Operating Season after bid opening, Contracting Officer shall, upon award, adjust the contract term to include additional calendar days in one or more Normal Operating Seasons equal to the actual time lost.

8. DOWNPAYMENT: The Bidder to whom award is made must make a downpayment at the time the Bidder signs the contract and returns the contract to the Forest Service. The amount of the downpayment will be calculated as shown in block 20 of this bid for advertised timber. Only cash may be used to meet this requirement. Deposits shall be made to the Forest Service U.S.D.A., by mail or delivery to the address on the bill furnished by Forest Service. After receipt of downpayment and executed contract with required performance bond, the bid guarantee will be returned to the successful Bidder.

Bidder's failure to make the downpayment in conformance with the terms, conditions, and requirements contained in Contracting Officer's letter of award shall constitute repudiation of bid pursuant to instruction 9. Bidder shall have 3 days from the required date of execution to make the downpayment at the location designated by Forest Service. Bidder shall pay simple interest at the Current Value of Funds Rate on the unpaid downpayment for the period within the 3 days in which the downpayment is late. In the event Bidder fails to make payment within the 3 days, Bidder's bid guarantee shall be retained by Forest Service and applied toward damages. If the amount of the bid guarantee exceeds the amount of damages, the balance will be refunded to Bidder.

9. DAMAGES: Bidder acknowledges that this contract shall be terminated for breach pursuant to blocks 16, 16a, 16b, 19, 21, 24, 25, 26, 27, 28 and/or 29 of this bid form if: (a) the Bidder fails to execute a timber sale contract, furnish a downpayment within 3 days of the required date of execution, or furnish a satisfactory performance bond, within the number of days listed in block 19, or any written extension thereof by Forest Service; or (b) the Bidder is found to have violated the False Statements Act in making any statement or certification on this bid form, including not meeting purchaser responsibility requirements. The Bidder acknowledges that the Bidder shall not be entitled to cure this breach and that it will pay damages pursuant to the following terms:

Damages due the United States shall be determined in the following manner: (a) The costs, as described in this instruction, incurred by Forest Service in contacting the other qualified bidders regarding accepting the award of the contract at the high Bidder's repudiated rate or (b) If another qualified bidder does not accept award of the contract at the high Bidder's repudiated rate:

(i) If the repudiated contract is reoffered within 6 months of the date of repudiation, damages shall be the difference between the total resale bid value and the total value of Bidder's repudiated bid, plus costs described in this instruction or
(ii) If there are no responsive bids on the reoffered contract, damages shall be the difference between the reoffered appraised value and the total value of Bidder's repudiated bid, plus costs described in this instruction or
(iii) If the repudiated contract will not be reoffered or the reoffer is not made within 6 months of Bidder's repudiation, damages shall be the difference between the appraised value of this contract as of the date of Bidder's repudiation and the total value of Bidder's repudiated bid, plus the costs described in this instruction.

The costs to be included in damages are the costs the Government incurs in making the reoffer, including, but not limited to, salary costs, document preparation and duplication costs, mailing costs, and timber sale advertisement costs.

Damages will also include interest measured by interest at the Current Value of Funds Rate established by the Secretary of the Treasury, on the difference between Bidder's retained bid guarantee and the downpayment amount and other deposits required at award. Interest will be calculated from the date of Bidder's repudiation to the date of award of the reoffered contract or to the date a determination is made not to reoffer the repudiated contract or for 6 months, whichever comes first.

Bidder and Forest Service agree that Bidder's bid guarantee shall be retained by Forest Service and applied toward damages due the United States for Bidder's failure to execute this contract.

10. PRIVACY ACT: All personal information is requested on a voluntary basis; however, if you do not provide this personal information, your bid will not be accepted and the contract will not be awarded to you. Solicitation of this information is necessary for the government to conduct its sale program and thus is authorized under the National Forest Management Act of 1976, (16 USC 472a). The principal purpose for collecting this information is to allow for proper award of a timber sale contract and to provide for administration of that contract after award. Other routine uses of this data include: (a) compilation of Small Business data to determine needs for set-aside sales, (b) determination of volume purchased in any specific time period by a single purchaser, and (c) determination of volume under contract by a purchaser.

11. ROAD COMPLETION DATE: Not applicable.

12. ELECTION OF ROAD OPTION AND CERTIFICATE OF SMALL BUSINESS STATUS: Not applicable.

13. ELECTION OF ROAD OPTION: Not applicable.

14. DEFINITIONS:

Affiliates*:* Business concerns or individuals are affiliates of each other if, directly or indirectly, (a) either one controls or has the power to control the other; or (b) a third party controls or has the power to control both.

Bidder: A Bidder is any individual, organization, or other legal entity that submits a bid for, or may be expected to submit a bid for, a National Forest System timber sale.

Covered Transactions: Covered transactions include both non-procurement and procurement transactions. A primary tier transaction is between a Federal Agency and a person. A lower tier transaction is between a participant in a covered transaction and another person. A procurement contract is a covered transaction if it is awarded to a participant in a non-procurement transaction and the amount of the contract is equal to or greater than $25,000.

Current Value of Funds Rate: A rate of interest established by the Secretary of the Treasury.

Manufacturer: A concern with an existing sawmill, specialty mill (such as a cedar mill, shingle or shake plant, pole plant, or deadwood stud mill), veneer mill, or other manufacturing facility within an economic or logical haul distance, or with firm commitments and permits for construction of such facility. The purpose of this facility is processing the sawtimber component of timber sales.

Nonmanufacturer:

a. Any concern which manufactures, with its own or leased facilities, or contracts for manufacture less than 50 percent of its total annual sawlog production within an economic or logical haul distance to such facilities, including pulp and fiberboard mills without a contiguous integrated manufacturing facility for lumber, timbers, or veneer from a sawtimber component.

b. A specialty concern that does not have the capacity to manufacture 50 percent or more of its average annual sawlog production because of factors such as timber species or size.

c. Any concern purchasing National Forest timber outside an economic and logical haul distance to its manufacturing facility.

d. Any pulp mill, fiberboard mill, or chip plant that purchases sales with a sawtimber component when it has no manufacturing facility for lumber, timbers, or veneer.

Participant: Any person who submits a proposal for, enters into, or reasonably may be expected to enter into a covered transaction. This term also indicates any person who acts on behalf of or is authorized to commit a participant in a covered transaction as an agent or representative of another participant.

Sale Officer: An individual delegated responsibility for any specific aspect or task in the bidding or awarding process for timber sales.

Small Business: In sales of National Forest timber a Small Business is a concern that: (a) is primarily engaged in the logging and forest products industry; (b) is independently owned and operated; (c) is not dominant in its field of operation; and (d) together with its affiliates does not employ more than 500 persons.

15. CERTIFICATION OF COMPLIANCE WITH EXPORT RESTRICTIONS: Certain restrictions on the purchase and export of unprocessed logs cut from National Forest timber apply in various parts of the country. Pursuant to the Forest Resources Conservation and Shortage Relief Act of 1990, as amended (16 USC 620, *et seq.*), the Bidder acknowledges that the Bidder is aware of the applicable export restrictions. The Bidder is aware that these restrictions affect the disposition of the included timber and is aware that the restrictions may reduce the potential value of the timber.

16. CERTIFICATION REGARDING DEBARMENT, SUSPENSION, PROPOSED DEBARMENT, AND OTHER RESPONSIBILITY MATTERS-TIMBER SALE TRANSACTIONS: The inability of a person to provide the certifications in block 16a will not necessarily result in denial of participation in this timber sale (covered transaction). The Bidder shall submit an explanation of why it cannot provide the certification. The certification or explanation will be considered in connection with the Forest Service's determination whether to enter into this timber sale. However, failure of the Bidder to furnish a certification or an explanation shall disqualify such person from participation in this timber sale.

The certification is a material representation of fact upon which reliance was placed when the Forest Service determined to enter into this timber sale. If it is later determined that the Bidder knowingly rendered an erroneous certification, in

addition to other remedies available to the Federal Government, the Forest Service may terminate this timber sale for cause or default.

The Bidder shall provide immediate written notice to the Forest Service officer, to whom this bid is submitted, if at any time the Bidder learns that its certification was erroneous when submitted or has become erroneous by reason of changed circumstances.

The terms 'covered transaction,' 'debarred,' 'suspended,' 'ineligible,' 'lower tier covered transaction,' 'participant,' 'person,' 'primary covered transaction,' 'principal,' 'proposal,' and 'voluntarily excluded,' as used in this clause, have the meanings set out in the Definitions and Coverage sections of the rules implementing Executive Order 12549. You may contact the Forest Service for assistance in obtaining a copy of those regulations.

The Bidder agrees by submitting this bid that, should the proposed timber sale transaction be entered into, it shall not knowingly enter into any subcontractor transaction (lower tier covered transaction) with a person who is proposed for debarment under 48 CFR 9.4, or who is debarred, suspended, declared ineligible, or voluntarily excluded under 48 CFR 9.4, or under 2 CFR 180 or 417 from participation in this timber sale, unless authorized by the Forest Service's non-procurement Debarring and Suspending Official.

The Bidder further agrees by submitting this bid that it will provide the addendum titled 'Subcontractor Certification Regarding Debarment, Suspension, Ineligibility, and Voluntary Exclusion,' without modification, to all subcontractors and in all solicitations for subcontractors.

17. SUBCONTRACTOR CERTIFICATION REGARDING DEBARMENT, SUSPENSION, INELIGIBILITY, AND VOLUNTARY EXCLUSION: Pursuant to 2 CFR 180.335 each timber sale purchaser shall require subcontractors to include a certification for it and its principals in any proposal submitted in connection with this timber sale. Purchasers shall keep the certifications on file until the termination date of the contract.

A participant in a timber sale may rely upon a certification of a prospective subcontractor that it is not proposed for debarment under 48 CFR 9.4, or is not debarred, suspended, ineligible, or voluntarily excluded under 48 CFR 9.4, or under 2 CFR 180 or 417 from the timber sale, unless it knows that the certification is erroneous. A timber sale purchaser may decide the method and frequency by which it determines the eligibility of its principals. Each timber sale purchaser may, but is not required to, check for those listed as Excluded in the System for Award Management.

Nothing contained in the foregoing shall be construed to require establishment of a system of records in order to render in good faith the certification required by this provision. The knowledge and information of a timber sale purchaser is not required to exceed that which is normally possessed by a prudent person in the ordinary course of business dealings.

Except for transactions authorized under paragraph 5 of these instructions, if a timber sale purchaser knowingly enters into a subcontractor transaction with a person who is proposed for debarment under 48 CFR 9.4, or who is suspended, debarred, ineligible, or voluntarily excluded under 48 CFR 9.4, or under 2 CFR 180 or 417 from participation in this contract, in addition to other remedies available to the Federal Government, the Forest Service may terminate this contract for cause or default and/or pursue suspension and/or debarment. The instructions and certification follow:

INSTRUCTIONS FOR:
Subcontractor Certification
Regarding Debarment, Suspension, Ineligibility, and Voluntary Exclusion

1. By signing and submitting this proposal, the prospective subcontractor (lower tier participant) is providing the certification set out below:

2. The certification is a material representation of fact upon which reliance was placed when this transaction was entered into. If it is later determined that the prospective subcontractor knowingly rendered an erroneous certification, in addition to other remedies available to the Federal Government, the Forest Service, with which this transaction originated, may pursue available remedies, including suspension and/or debarment.

3. The prospective subcontractor shall provide immediate written notice to the person to whom this proposal is submitted if at any time the prospective subcontractor learns that its certification was erroneous when submitted or has become erroneous by reason of changed circumstances.

4. The terms 'covered transaction,' 'debarred,' 'suspended,' 'ineligible,' 'lower tier covered transaction,' 'participant,' 'person,' 'primary covered transaction,' 'principal,' 'proposal,' and 'voluntarily excluded,' as used in this clause, have the meanings set out in the Definitions and Coverage sections of the rules implementing Executive Order 12549. You may contact the Forest Service for assistance in obtaining a copy of those regulations.

5. The subcontractor agrees by submitting this certification that, should the proposed subcontract be entered into, it shall not knowingly enter into any other subcontract with a person who is proposed for debarment under 48 CFR 9.4, debarred, suspended, declared ineligible, or voluntarily excluded under 48 CFR 9.4, or under 2 CFR 180 or 417 from participation in this timber sale, unless authorized by the Forest Service.

6. The subcontractor further agrees by submitting this certification that it will include this certification titled "Subcontractor Certification Regarding Debarment, Suspension, Ineligibility and Voluntary Exclusion," without modification, and instructions in all subcontracts and in all solicitations for its subcontracts.

Subcontractor Certification
Regarding Debarment, Suspension, Ineligiblity, and Voluntary Exclusion

Sale Name: Gates Salvage

National Forest: Chequamegon/Nicolet

The prospective subcontractor (participants in lower tier covered transactions) certifies, by submission of this proposal, that neither it nor its principals is presently debarred, suspended, proposed for debarment, declared ineligible, or voluntarily excluded from participation in this timber sale by any Federal department or agency.

Where the prospective subcontractor is unable to certify to any of the statements in this certification, such prospective subcontractor shall attach an explanation to this proposal.

Name of Subcontractor: _____

Business Address: _____

_____

_____

_____ _____

Date Signature

BIDDER BOND INFORMATION

Region: 09 **Forest: Chequamegon Nicolet** **District: _____**

Sale Name: _____ **Bid Date: _____**

Bidder Name: _____

I request my cash equivalent bid guarantee be applied towards my Down Payment deposit requirement.
Yes _____ No _____

For the Performance Guarantee coverage, I plan to use (check one):

( ) Unknown
( ) Cash
( ) Letter of Credit
( ) Corporate Surety
Name _____
Address _____
City/State/Zip _____
( ) Assignment of Savings
( ) Assignment of Certificate of Deposit
( ) Negotiable Securities

For the Payment Guarantee coverage (check one):

( ) I will not use Payment guarantee coverage, I will be making advance cash deposits, as needed.
( ) Unknown
( ) Payment Bond (applicable to this sale only)
In the amount of $_____
( ) Blanket Payment Bond
( ) Add this sale to existing Blanket Payment Bond
Bond No. _____
( ) I will be executing a new Blanket Bond.

My payment guarantee coverage will be secured by the following: (check one):

( ) Unknown
( ) Letter of Credit
( ) Corporate Surety
Name _____
Address _____
City/State/Zip _____
( ) Assignment of Savings
( ) Assignment of Certificate of Deposit
( ) Negotiable Securities

This form is available electronically.

Form Approved – OMB No. 0505-0025
Expiration Date: 02/29/2016

AD-3030-FS

U.S. DEPARTMENT OF AGRICULTURE

REPRESENTATIONS REGARDING FELONY CONVICTION AND TAX DELINQUENT STATUS FOR CORPORATE APPLICANTS

Note: You only need to complete this form if you are a corporation. A corporation is any entity that has filed articles of incorporation in one of the 50 States, the District of Columbia, or the various territories of the United States including American Samoa, Federated States of Micronesia, Guam, Midway Islands, Northern Mariana Islands, Puerto Rico, Republic of Palau, Republic of the Marshall Islands, or the U.S. Virgin Islands. Corporations include both for profit and non-profit entities.

The following statement is made in accordance with the Privacy Act of 1974 (5 U.S.C. 552(a), as amended). The authority for requesting the following information is sections 433 and 434 of the Consolidated Appropriations Act, 2012, P.L. 112-74, and subsequent similar provisions. The information will be used to confirm applicant status concerning entity conviction of a felony criminal violation, and/or unpaid Federal tax liability status.

According to the Paperwork Reduction Act of 1985 an agency may not conduct or sponsor, and a person is not required to respond to a collection of information unless it displays a valid OMB control number. The valid OMB control number for this information collection is 0505-0025. The time required to complete this information collection is estimated to average 15 minutes per response, including the time for reviewing instructions, searching existing data sources, gathering and maintaining the data needed, and completing and reviewing the collection of information.

1. APPLICANT'S NAME	2. APPLICANT'S ADDRESS *(Including Zip Code)*	3. TAX ID NO. *(Last 4 digits)*

4A. Has the Applicant been convicted of a felony criminal violation under Federal law in the 24 months preceding the date of application? ☐ YES ☐ NO

4B. Has any officer or agent of Applicant been convicted of a felony criminal violation for actions taken on behalf of Applicant under Federal law in the 24 months preceding the date of application? ☐ YES ☐ NO

4C. Does the Applicant have any unpaid Federal tax liability that has been assessed, for which all judicial and administrative remedies have been exhausted or have lapsed, and that is not being paid in a timely manner pursuant to an agreement with the authority responsible for collecting the tax liability? ☐ YES ☐ NO

Providing the requested information is voluntary. However, failure to furnish the requested information will make the applicant ineligible to enter into a contract, memorandum of understanding, grant, loan, loan guarantee, or cooperative agreement with USDA.

PART B – SIGNATURE

5A. APPLICANT'S SIGNATURE (BY)	5B. TITLE/RELATIONSHIP OF THE INDIVIDUAL IF SIGNING IN A REPRESENTATIVE CAPACITY	5C. DATE SIGNED *(MM-DD-YYYY)*

The U.S. Department of Agriculture (USDA) prohibits discrimination in all of its programs and activities on the basis of race, color, national origin, age, disability, and where applicable, sex, marital status, familial status, parental status, religion, sexual orientation, political beliefs, genetic information, reprisal, or because all or part of an individual's income is derived from any public assistance program. (Not all prohibited bases apply to all programs.) Persons with disabilities who require alternative means for communication of program information (Braille, large print, audiotape, etc.) should contact USDA's TARGET Center at (202) 720-2600 (voice and TDD). To file a complaint of discrimination, write to USDA, Assistant Secretary for Civil Rights, Office of the Assistant Secretary for Civil Rights, 1400 Independence Avenue, S.W., Stop 9410, Washington, DC 20250-9410, or call toll-free at (866) 632-9992 (English) or (800) 877-8339 (TDD) or (866) 377-8642 (English Federal-relay) or (800) 845-6136 (Spanish Federal-relay). USDA is an equal opportunity provider and employer.