CT2.302# - BOUNDARY TREES *(06/2009)*

Boundary trees for all harvest units have been designated with **Orange 3-slash paint at eye level on exterior boundary trees facing into the Payment Units; Orange 2-slash paint at eye level on interior boundaries on both sides of trees facing into the Payment Units,** paint marks above and below stump height. Boundary trees shall not be cut.

CT2.352# - DESIGNATION BY SPECIES AND DIAMETER *(04/2004)*

Trees that meet Utilization Standards are designated for cutting, as shown on the Tree Designation Table and Sale Area Map, except trees Marked with **Orange** paint or described to be left uncut.

See Tree Designation Table.

Additional trees to be cut, if any, are Marked with **N/A** paint.

All **hemlock, cedar, pine, elm and oak** shall be left as leave trees, unless Marked with **N/A** paint. Leave **N/A** trees of the designated cut species, **N/A** inches stump diameter or greater, to avoid leave tree spacing greater than **N/A** feet. Cutting unit boundaries and other trees that shall be left uncut are Marked with **ORANGE slashes at eye level or ORANGE bands (with stump mark)** paint.

Distances are measured horizontal distance, outside bark stump height to outside bark stump height. Stump diameter is measured outside bark at stump height in a horizontal and is the average of a measurement across the short axis through the true center of the stump and a second measurement at right angles to the short axis.

Purchaser and Forest Service shall agree to skid trail location under BT6.422. Skid trails shall be no greater than **N/A** feet wide with a **N/A** foot spacing. Quantities of trees located in skid trails **are not (unless included as designated species in Designation Table)** Included Timber under AT2.

R9-CT2.352# – DESIGNATION BY SPECIES AND DIAMETER. (09/2004)

Tree Designation Table

Payment Unit(s) or Cutting Unit(s)	Designated Species 1/	More Than Stump Diameter (inches) 2/	Less Than Stump Diameter (inches) 2/
1- 5 and 7-12	All species EXCEPT Hemlock, Pine, Cedar, Elm and Oak.	>=6.0"	

CT2.355# - INDIVIDUAL TREES, CUT TREE MARKING *(06/2009)*

Individual trees to be cut are Marked with indicated color above and below stump height in all or parts of the following Payment Unit(s). Areas of cut tree marking are shown on the Sale Area Map with the symbol "CTM."

PAYMENT UNIT(S)	PAINT COLOR

R9-CT2.355# - INDIVIDUAL TREES. (09/2004)

Cut Tree Marking Table

Payment Units	Paint Color
6	Blue
13 (ROW)	Yellow

CT4.211 - DOWNPAYMENT *(06/2007)*

The downpayment amount shown in AT15 may not be applied toward any other payment required under the provisions of this contract, except damages determined pursuant to BT9.4, transferred to other timber sales, or refunded until (a) stumpage value representing 25 percent of the total bid value of the timber sale is shown on Timber Sale Account to have been cut, removed, and paid for, or (b) the estimated value remaining to be cut and removed, as shown on Timber Sale Account, is equal to or less than the amount of the downpayment, or (c) if 36 CFR 223.49(e) is applicable, the estimated value remaining to be cut and removed, as shown on Timber Sale Account, is equal to or less than the amount of the downpay-ment. For lump sum timber sales, the downpayment may be applied to payment for release of the single payment unit.

If Forest Service makes a determination that this contract should not have been included under in-creased downpayment requirements (36 CFR 223.49(e)), the downpayment shall be revised and applied in accordance with 36 CFR 223.49(f).

CT4.212 - TEMPORARY REDUCTION OF DOWNPAYMENT *(08/2009)*

Notwithstanding BT4.211 or CT4.211, upon the Purchaser's written request Forest Service may temporarily reduce the downpayment when Purchaser's scheduled operations are delayed or interrupted for 30 or more consecutive days, or the contract term is extended for 30 or more consecutive days for any of the following reasons:

(1) Forest Service requests or orders Purchaser to delay or interrupt scheduled operations for reasons other than breach;

(2) Purchaser interrupts or delays scheduled operations to work on a sale designated by the Forest Service as in urgent need of harvesting; or

(3) An adjustment of the contract term authorized upon a determination of substantial overriding public interest, including a market-related contract term addition, or an urgent removal contract term extension under 36 CFR 223.53.

When Purchaser is not cutting or removing timber under contract during a qualifying period of delay, interruption, or extension listed above the downpayment may be reduced to $1000 or 2 percent of the downpayment amount stated in the contract, whichever is greater. The Purchaser must restore the downpayment to the full amount stated in the contract within 15 days from receipt of the bill for collection and written notice from the Contracting Officer that the basis for temporarily reducing the downpayment no longer exists. Purchaser shall not cut or remove timber on a contract where the downpayment has been temporarily reduced until the downpayment amount stated in the contract is fully restored.

CT4.4 - PAYMENTS NOT RECEIVED *(08/2012)*

(a) Payments are due and payable on the date of issue indicated on the bill for collection. When a payment for timber cut and other charges is not received at the location designated by Forest Service by the date specified in the bill for collection, Contracting Officer will suspend all or any part of Purchaser's Operations until payment or acceptable payment guarantee is received. Other charges include, but are not limited to:

(i) Slash disposal and road maintenance deposits;

(ii) Cooperative work at rates established by specific agreement under BT4.218;

(iii) Damages pursuant to BT9.4;

(iv) Road use fees;

(v) Restoration of downpayment pursuant to BT4.22;

(vi) Periodic payments pursuant to BT4.213;

(vii) Extension Deposits pursuant to BT4.217; and

(viii) Other mandatory deposits.

(b) Failure to pay amounts due by the date specified in the bill for collection shall be considered a breach under BT9.3. The 30-day notice period prescribed therein shall begin to run as of the end of business on the date specified for receipt of payments. If the performance or payment is guaranteed by surety bond, the surety will receive a copy of the written notification of breach. Demand will be made on the surety or other institution providing the guarantee or bond instrument for immediate payment 10 days after issuance of written notification of the breach.

(c) Pursuant to the Debt Collection Improvement Act of 1996, as amended, if payment is not received by Forest Service within 15 days after the date of issue indicated on the bill for collection:

(i) Simple interest shall be assessed at the Current Value of Funds Rate as established by the Secretary of the Treasury. Interest will begin to accrue as of the date of issue indicated on the initial bill for collection.

(ii) Debtors will be assessed administrative charges, in addition to the delinquent amount due. Administrative charges are those additional costs incurred by the Government in processing, handling, and collecting delinquent debts.

(iii) A penalty charge of six (6) percent per annum will be assessed on any portion of a debt delinquent more than 90 days. This penalty charge is in addition to interest and administrative charges under paragraphs (c)(i) and (c)(ii). The penalty charge shall accrue from the date of issue indicated on the bill for collection and shall be assessed on all outstanding amounts, including interest and administrative costs assessed under paragraphs (c)(i) and (c)(ii).

(iv) Payments will be credited on the date received by the Federal Depository or Collection Officer designated on the bill for collection.

(d) Forest Service remedies for Purchaser's failure to make payment for timber cut and other charges when due, except for accrual of interest, suspension of all or any part of Purchaser's Operations, and administrative offset, shall be stayed for so long as:

(i) A bona fide dispute exists as to Purchaser's obligation to make such payment and

(ii) Purchaser files and prosecutes a timely Claim.

CT5.12# - USE OF ROADS BY PURCHASER *(06/1999)*

Purchaser's use of existing roads identified on Sale Area Map by the following codes is prohibited or subject to restrictive limitations, unless agreed otherwise:

Code	Use Limitations
X	Hauling prohibited
R	Hauling restricted
U	Unsuitable for hauling prior to completion of agreed reconstruction
P	Use prohibited
A	Public use restriction
W	Regulation waiver

Roads coded A will be signed by the Forest Service to inform the public of use restrictions. Purchaser's use of roads coded R, A, or W shall be in accordance with the following restrictions:

See Restricted Road List Table.

CT5.12# – USE OF ROADS BY PURCHASER. (6/99)

Restricted Road List

Road Number	Road Name	Termini		Map Legend	Description of Restrictions
		From	To		
8135	Blue Jay Pit Road			R	Gate shall be closed and locked when not hauling gravel.
8100	8100	8120	North	X	Hauling prohibited, includes empty log trucks due to weight restricted bridge over West Branch of Presque Isle River (currently 3 ton gross).
8100	8100	Bridge over the South Branch of the Presque Isle River		R	Hauling/Use must be in accordance with posted weight limits.
8120	8120	8128	South	X	Hauling Prohibited
8128-F	8128-F	MP 0.00	MP 0.21	U	Unsuitable for Hauling Prior to Completion of Construction

X – Hauling Prohibited includes empty log trucks and all other "on-road" vehicles.

CT5.221# - MATERIAL SOURCES *(04/2004)*

Sources of local materials are designated on Plans and Sale Area Map. Forest Service assumes responsibility for the quality and quantity of material in designated sources. Purchaser shall determine the equipment and work required to produce the specified product, including the selection of acceptable material that is reasonably available in the source that meets specifications. The designation of source includes the rights of Purchaser to use certain area(s) for plant site, stockpiles, and haul roads.

Should the designated source, due to causes beyond the control of Purchaser, contain insufficient acceptable material, Forest Service will provide another source with adjustment in accordance with BT5.253.

When Purchaser elects not to use designated sources, Purchaser shall furnish the specified product with no adjustment in unit rates. Quality testing shall be the responsibility of Purchaser. Test results shall be furnished to Forest Service.

When Purchaser elects not to use designated sources and the Schedule of Items lists pit development separately, cost allowance will be reduced under BT5.253 when Forest Service determines the work will not be required.

When materials are subject to a weight measurement, the specific gravity or weight/volume relationship used as a basis for determination of estimated quantities shall be:

Source I N/A , Source II N/A , and Source III N/A .

Purchaser may, when agreed in writing, use on the project such suitable stone, gravel, and sand, or other material found in the excavation, and will earn a cost allowance for the excavation of such materials at the corresponding contract unit price and for the pay items for which the excavated material is used. Purchaser shall replace, without additional cost allowance, sufficient suitable materials to complete the portion of the work, which was originally contemplated to be constructed with such material. Purchaser shall not excavate or remove any material, except that which is within the excavation limits, without written authorization from Forest Service.

When material is appraised from non-National Forest designated sources, owner charges for the material in terms of unit cost for royalties, purchase of raw materials, or finished products shall be as follows until N/A :

See Material Source Table.

Should quantity vary from that estimated, payment to owners shall be for units actually obtained. Purchaser shall make arrangements with owner(s) for measurement and payment for royalties, purchase of raw materials, or finished products, as shown above.

Materials produced or processed from National Forest lands in excess of the quantities required for performance of this contract are the property of Forest Service, unless prior written agreement has been obtained to use excess material on other National Forest sales. Forest Service is not obligated to reimburse Purchaser for the cost of their production.

Materials shall be stored to assure the preservation of their quality and fitness for the work. Stored mate-rials shall be located to facilitate their prompt inspection. Sites on Forest Service administered land, ap-proved by Forest Service, may be used for storage purposes and for the placing of Purchaser's plant equipment. All storage sites provided by Forest Service shall be restored at Purchaser's expense. Pur-chaser shall be responsible for making arrangements for storage on other than Forest Service adminis-

tered lands.

When the construction of the portion of the project for which Temporary Roads used for hauling materials is completed, all such Temporary Roads shall be restored as nearly as practicable to their original ground profile, unless otherwise agreed in writing.

CT5.221# – MATERIAL SOURCES. (4/04)

Material Source Table

Material	Type of Purchase	Owner(s)	Unit of Measure	Unit Price	Estimated Quantity	Total
Pit Run	N/A	Blue Jay Pit (USFS)	CY	N/A	80 CY (104 CY Loose)	80 CY

NOTE: Pit restoration (per specifications) in the Blue Jay Pit shall be accomplished no later than the end of each operating season.

CT5.31# - ROAD MAINTENANCE REQUIREMENTS *(07/2001)*

Purchaser shall maintain roads in accordance with the following Contract Road Maintenance Requirements Summary:

See Contract Road Maintenance Requirements Summary Table.

SECTION 3. ROAD MAINTENANCE REQUIREMENTS SCHEDULE

Contract Road Maintenance Requirements Summary

Road	Termini		Miles	Applicable Prehaul Road Maintenance Specifications								
	From	To		T-8030	T-8110	T-8130	T-8310	T-8340	T-8350	T-8360	T-8420	T-8620
8128	0.00	0.25	0.25			P	P	P		P		P
8128	0.86	1.66	0.80				P	P		P		
8128-D	0.00	0.44	0.44				P	P		P		
8128-D1	0.00	0.23	0.23				P	P		P		

P = Purchaser Performance Item, **D** = Deposit to Forest Service, **D3** = Deposit to Third Party

Road	Termini		Miles	Applicable During Haul Road Maintenance Specifications								
	From	To		T-8030	T-8110	T-8130	T-8310	T-8340	T-8350	T-8360	T-8420	T-8620
8128	0.00	1.66	1.66	P		P1/	P	P		P		P
8128-D	0.00	0.44	0.44	P			P	P		P		
8128-D1	0.00	0.23	0.23	P			P	P		P		
8128-F	0.00	0.21	0.21	P			P	P		P		
8128-G	0.00	0.30	0.30	P			P	P		P		
8100	M-64	8120	3.89	P	D		D	D			D	
8120	8100	8128	1.78	P	D		D	D			D	
8135*	Gate											P

P = Purchaser Performance Item, **D** = Deposit to Forest Service, **D3** = Deposit to Third Party

P1/ = **30 CY (39 CY loose) to be spot placed as directed by Forest Service**

* Blue Jay Pit Road

Road	Termini		Miles	Applicable Post Haul Road Maintenance Specifications								
	From	To		T-8030	T-8110	T-8130	T-8310	T-8340	T-8350	T-8360	T-8420	T-8620
8128	0.00	1.66	1.66				P	P	P	P		P
8128-D	0.00	0.44	0.44				P	P	P	P		
8128-D1	0.00	0.23	0.23				P	P	P	P		
8128-F	0.00	0.21	0.21				P	P	P	P		
8128-G	0.00	0.30	0.30				P	P	P	P		
8100	M-64	8120	3.89		D		D	D			D	
8120	8100	8128	1.78		D		D	D			D	

P = Purchaser Performance Item, **D** = Deposit to Forest Service, **D3** = Deposit to Third Party

CT5.32# - ROAD MAINTENANCE DEPOSIT SCHEDULE *(07/2001)*

Other provisions herein notwithstanding, when Forest Service requests payment in lieu of Purchaser's performance of road maintenance, Purchaser shall make Required Deposits (16 USC 537) for current and/or deferred road maintenance. Such deposits are based on the estimated volume and distance hauled and Purchaser's commensurate use of each road listed in the Road Maintenance Plan in CT5.31#.

Purchaser and Forest Service may agree in writing on adjustment of such rates. If Purchaser uses roads under jurisdiction of Forest Service other than those listed in the Road Maintenance Plan, Forest Service shall establish rates commensurate with Purchaser's use of such roads.

The Required Deposits for Forest Service work in lieu of Purchaser performance and for deferred maintenance is: $5.36 per CCF .

The following table lists who Purchaser will make deposits for road maintenance to, and the rate per unit of measure of the deposit. The Road Maintenance Agreement is available for inspection at the Forest Supervisor's office.

Deposit Made To	Rate	Unit of Measure
N/A		

CT6.314# - OPERATING REQUIREMENTS *(06/2009)*

Within Sale Area, unless changed by written agreement, the following operating requirements apply:

Restricted operations/activities:
Within Payment Unit 1 - Harvest Operations are restricted during the period of 3/16 through 7/31 (due to soils and residual stem protection) and during the period of 10/1 through 12/14 (due to soils).

Within Payment Units 2, 3, 4, 5, 6, 8, 10, 11 & 12 - Harvest Operations are restricted during the period of 3/16 through 7/31 (due to soils) and during the period of 9/1 through 12/14 (due to soils).

Within Payments Units 7 & 9 - Harvest Operations are restricted during the period of 3/16 through 12/14 (due to soils).

Prohibited operations/activities:
N/A

CT6.412 - STUMP MARKS *(06/2009)*

Trees designated for cutting under BT2.35 have been marked with paint at breast height and below stump height. Trees shall be felled so as to leave paint on stump.

CT6.42# - SKIDDING AND YARDING REQUIREMENTS *(06/2009)*

As used in this provision, skidding equipment includes rubber-tire and track-mounted skidders, forwarders, fell bunchers, processors and any other mechanized equipment that is used off of landings and roads.

Within Payment Unit(s)
2 and 12 ,
SYR(1): All Included Timber shall be skidded/forwarded out of Payment Unit 2 to a landing location designated by the Forest Service.

SYR(2): All Included Timber shall be skidded/forwarded out of Payment Unit 12 through Payment Unit 10 to a landing location designated by the Forest Service. .

Within portions of Payment Unit(s)

N/A , as shown on Sale Area Map with symbol "SYR," N/A .

CT6.62# - SITE SPECIFIC WETLANDS PROTECTION MEASURES *(07/2001)*

Measures needed to protect wetlands identified on the Sale Area Map or on the ground include:

All logging slash, equipment, and vehicles are prohibited within these areas. Any slash resulting from the Purchaser's Operations shall be removed immediately or treated as directed by the Forest Service.

CT6.7# - SLASH DISPOSAL MEASURES *(06/2009)*

Slash resulting from Purchaser's operations shall be removed from lakes, ponds, private land, right-of-way clearings for telephone lines, power lines, pipelines, and other authorized facilities, and landings to be seeded under Special Provision CT6.6#.

The tops of felled trees shall not be left hanging in standing trees. All trees cut or pushed for landing and other construction clearings shall be completely felled and not left leaning. Slash resulting from construction clearing shall be treated concurrent with operations.

Slash Disposal treatment zones are shown on the Sale Area Map with symbol "SDZ."

Other specific slash disposal requirements are as follows:

SDZ - Slash resulting from construction clearing (such as from landings, rights-of-way clearing associated with pre-haul maintenance requirements listed in Special Provision CT5.31#, Specified Road Construction, Specified Road Reconstruction, and temporary road construction), shall be lopped and scattered to lie within 3 feet of the ground. All root wads shall be severed from the stem and righted on the ground or otherwise disposed of as directed by the Forest Service concurrent with operations.

SDZ(1) - Within the Sale Area, except as noted elsewhere in this contract, all debris/slash resulting from the use of slashers/processors or other similar equipment will be removed from landings and roadsides and scattered to lie within 3 feet of the ground or otherwise disposed of as directed by the Forest Service, concurrent with operations.

CT7.2 - FIRE PRECAUTIONS *(06/2009)*

Unless other methods are agreed to in writing between the Purchaser and the Contracting Officer, the following specific precautionary measures are applicable during Purchaser's Operations in Fire Precautionary Period indicated in AT9.

1. Purchaser shall maintain Forest Service-approved spark arresting device on any piece of equipment operated by an internal combustion motor. In addition, each piece of motorized equipment shall be equipped with a serviceable round-pointed shovel and an operational fire extinguisher of at least five-pound rating suitable for the equipment being used. All chainsaw operators will have a serviceable round-pointed shovel and a one-pound multipurpose fire extinguisher readily available.

2. Purchaser shall require that smoking and the building of lunch or warming fires by Purchaser's employees, contractors, or employees of contractors be confined to designated safe places where flammable debris has been cleared away and where, at the option of the Purchaser, smoking or the building of lunch or warming fires may be permitted.

3. Adequate spark arresters shall be maintained on chimneys or stovepipes where wood or coal is being burned in an enclosed device.

4. Purchaser shall furnish serviceable firefighting tools. Location, numbers, and types of tools shall be specified in the Fire Prevention and Control Plan in accordance with BT7.1.

CT8.212 - MARKET-RELATED CONTRACT TERM ADDITION *(11/2008)*

The term of this contract may be adjusted when a drastic reduction in wood product prices has occurred in accordance with 36 CFR 223.52. The Producer Price Index used to determine when a drastic reduction in price has occurred is stated in AT17. Purchaser will be notified whenever the Chief determines that a drastic reduction in wood product prices has occurred. If the drastic reduction criteria specified in 36 CFR 223.52 are met for 2 consecutive calendar quarters, after contract award date, Contracting Officer will add 1 year to the contract term, upon Purchaser's written request. For each additional consecutive quarter such a drastic reduction occurs, Contracting Officer will, upon written request, add an additional 3 months to the term during Normal Operating Season, except that no single 3-month addition shall extend the term of the contract by more than one year. Contracting Officer must receive Purchaser's written request for a market-related contract term addition before the expiration of this contract.

No more than 3 years shall be added to a contract's term by market-related contract term addition unless the following conditions are met:

(i) The sale was awarded after December 31, 2006; and

(ii) A drastic reduction in wood product prices occurred in at least ten of twelve consecutive quarters during the contract term, but not including the quarter in which the contract was awarded.

For each qualifying quarter meeting the criteria in paragraphs (i) and (ii) of this provision, the Forest Service will, upon the Purchaser's written request, add an additional 3 months during the normal operating season to the contract, except no single 3-month addition shall extend the term of a contract by more than 1 year.

In no event shall a revised contract term exceed 10 years as a result of market-related contract term addition.

Additional contract time may not be granted for those portions of the contract that have a required completion date or for those portions of the contract where Contracting Officer determines that the timber is in need of urgent removal or that timber deterioration or resource damage may result from delay.

WEST FOXPAW ROAD MAINTENANCE REQUIREMENTS
FS-2400-6T Contracts (06/06)
CT5.31# Special Provisions

SECTION 1. GENERAL

Purchaser's main Road Maintenance responsibility begins: (1) after Purchaser performs Prehaul Maintenance on a road listed in the Road Maintenance Requirements Schedule; or (2) for all other roads, when Purchaser begins to use the road. Occasional travel by Purchaser's light vehicles, prior to beginning of construction clearing or logging operations in the area accessed by the road, does not constitute beginning of use. Purchaser is not required to perform routine maintenance during periods of inactivity. During periods of inactivity, Forest Service will perform maintenance only as required to meet its needs.

The Purchaser shall maintain roads, commensurate with the Purchaser's use, in accordance with the Road Maintenance Requirements Summary and Road Maintenance Specifications. Performance of road maintenance work by the Purchaser may be required prior to, during, or after each period of use. The timing of work accomplishment shall be based on the Purchaser's operating schedule under Standard Provision **BT6.31**.

If the Purchaser elects to use different roads than those listed in the Road Maintenance Requirements Summary, the Contracting Officer (CO) or designee shall determine the Purchaser's commensurate share of road maintenance and/or revise road maintenance deposits.

Unless the CO or designee agrees in writing, all Prehaul Maintenance requirements shall be completed on any portion of road prior to hauling on that portion.

The Forest Service shall prepare a revised Road Maintenance Requirements Schedule to reflect changes in the original haul routes when needed.

Any work or materials that are determined to no longer be needed and are waived shall have the estimated cost charged to the Timber Sale Account as described in **BT8.31**.

SECTION 2. ROAD MAINTENANCE DEFINITIONS

Wherever the following terms are used in the Road Maintenance Specifications, the meaning shall be:

Base Course. Material placed on the Subgrade to distribute concentrated wheel loads.

Borrow. Select Material taken from designated borrow sites.

Crown, Inslope, and Outslope. The cross slope of the Traveled Way to aid in drainage and traffic maneuverability.

Culverts. A conduit or passageway under a road, trail, or other obstruction. A culvert differs from a bridge in that it is usually entirely below the elevation of the Traveled Way.

WEST FOXPAW ROAD MAINTENANCE REQUIREMENTS
FS-2400-6T Contracts (06/06)
CT5.31# Special Provisions

Drainage Dip. A dip in the Traveled Way which intercepts surface runoff and diverts the water off the Traveled Way. A Drainage Dip does not block the movement of traffic.

Drainage Structures. Manufactured structures which control the runoff of water from the Roadway including Inslope, overside drains, aprons, flumes, downdrains and downpipes.

During Haul Maintenance. Road maintenance work to be accomplished during the period of timber removal.

Geotextile. A group of construction fabrics with varying attributes designed for different purposes.

Lead-off Ditches. A ditch used to transmit water from a Culvert, Drainage Structure or Drainage Dip outlet to the natural drainage area.

Maintenance Activitiy. Items of work leading to the restoration and upkeep of a road and necessary to sustain the road's anticipated traffic.

Material. Any substance specified for use in the performance of the work.

Post Haul Maintenance. Road maintenance work to be accomplished after timber removal is completed.

Prehaul Maintenance. Road maintenance work to be accomplished prior to the roads use. Roads receiving prehaul maintenance shall be shown on the Sale Area Map.

Road Maintenance Cost. An estimate of the cost to perform road maintenance activities; as determined by the Forest Service. Estimates may include any or all of the work activities listed in Section 4, Road Maintenance Activity Specifications.

Roadbed. The portion of a road between the intersection of Subgrade and sideslopes, excluding that portion of the ditch below Subgrade.

Roadside. A general term denoting the area adjoining the outer edge of the Roadway.

Roadway. The portion of a road within the limits of excavation and embankment.

Sand Hole. A hole that develops in the running surface of the road which is quite soft and dangerous in nature. Usually found in very sandy soils.

Shoulder. That portion of Roadway contiguous with Traveled Way for accommodation of stopped vehicles, for emergency use, and lateral support of Base and Surface Course, if any.

Slide. A concentrated deposit of materials from above or on backslope extending onto the Traveled Way or Shoulders, whether caused by mass land movements or accumulated ravelling.

Slough. Material eroded from the backslope which partially or completely blocks the ditch, but does not encroach on the Traveled Way so as to block passage of traffic.

Slump. A localized portion of the Roadbed which has slipped or otherwise become lower than that of the adjacent Roadbed and constitutes a hazard to traffic.

WEST FOXPAW ROAD MAINTENANCE REQUIREMENTS
FS-2400-6T Contracts (06/06)
CT5.31# Special Provisions

Subgrade. Top surface of Roadbed upon which Base Course or Surface Course is constructed. For roads without Base Course or Surface Course, that portion of Roadbed prepared as the finished wearing surface.

Surface Course. The Material placed on the Base Course or Subgrade to enhance traction, distribute concentrated wheel loads and resist abrasion and the effects of climate. Surface Course may be referred to as surfacing.

Traveled Way. That portion of Roadway, excluding Shoulders, used for the movement of vehicles.

Turnouts. That portion of the Traveled Way constructed as additional width on single lane roads to allow for safe passing of vehicles.

SECTION 3. ROAD MAINTENANCE REQUIREMENTS SCHEDULE

See Summary in **CT 5.31#**.

SECTION 4. ROAD MAINTENANCE SPECIFICATIONS

INCLUDED SPECIFICATIONS

Specification No.	Specification Title
T-8030	Snow Removal
T-8110	Maintenance Blading/Grading
T-8130	Spot Surface Course Placement/Replenishment
T-8310	Ditch Cleaning
T-8340	Drainage Structure Maintenance
T-8350	Roadway Drainage Maintenance
T-8360	Composite High Clearance Road Maintenance
T-8420	Cutting Roadway Vegetation
T-8620	Miscellaneous Maintenance

T-8030 Snow Removal

DESCRIPTION

1.1 This Section provides for removal of snow from roads to facilitate logging operations and safe use. Remove snow from all or part of the traveled way, including sufficient turnouts for safe and efficient use for timber transportation and to protect the road. Remove intruding windfalls, debris or slough and slide material and dispose of only as necessary to provide passage for timber transportation. Removed materials may be deposited off the traveled way or outside the traveled way at locations designated by the Forest Service Representative (FSR). Snow may also be compacted as needed to freeze down soft areas or wet areas. This work is considered part of this specification. Equipment used for this work shall be in accordance with this specification and approved in advance by the FSR.

WEST FOXPAW ROAD MAINTENANCE REQUIREMENTS
FS-2400-6T Contracts (06/06)
CT5.31# Special Provisions

EQUIPMENT

2.1 Purchaser may use any type of equipment to remove snow, providing:

a. Type or use of equipment is not restricted in **CT5.12#** or Schedule document.

b. Equipment is of the size and type commonly used to remove snow and will not cause damage to the road. Tracked or cleated vehicles shall not be used unless approved in writing by the FSR.

c. The Blade will be equipped with skid shoes to prevent loss of surfacing and damage to the road bed. On gravel and native surface roads, a minimum _4_ -inch depth compacted snow mat will be maintained on the roadbed during blading.

REQUIREMENTS

3.1 Erect signs required by the Sign Plan in the SUPPLEMENTAL SPECIFICATIONS or as shown on the Section 3. Road Maintenance Requirements Schedule. Perform work in a manner to preserve and protect roads and appurtenances, and prevent erosion damage to roads, streams, and other forest values.

3.2 Space, construct, and maintain drainage holes in the dike of snow or berm caused by snow removal operations. Place drain holes to obtain surface drainage without discharging on erodible fills.

3.3 Upon seasonal completion of Purchaser's Operations, effectively block the road by a snow barricade, unless otherwise approved by the Contracting Officer.

3.4 Ice control may be performed by Purchaser when approved by the FSR in writing. Such approval will include ice control materials, application rates, and any specific requirements of use.

3.5 Snow berms will be reduced at road intersections where plowed road segments join unplowed road segments. Reduce the piled snow in the roadway to create a smooth transition from plowed road to normal snow depth.

T-8110 Maintenance Blading/Grading

DESCRIPTION

1.1 Maintenance Blading/Grading is keeping an aggregate surfaced Roadbed in a condition to facilitate traffic and provide proper drainage. It includes maintaining the Crown, Inslope or Outslope of the Traveled Way, Turnouts, and Shoulder; repairing Berms; blending approach road intersections; and cleaning Drainage Dips and Lead-off Ditches.

WEST FOXPAW ROAD MAINTENANCE REQUIREMENTS
FS-2400-6T Contracts (06/06)
CT5.31# Special Provisions

EQUIPMENT

2.1 The equipment required to shape, spread, and compact surfacing is listed below.

Road Number	Road Termini - From	Road Termini - To	Equipment Description
8100	M-64	8120	Motor-grader (or equivalent)
8120	8100	8128	Motor-grader (or equivalent)

REQUIREMENTS

3.1 Maintenance Blading/Grading shall be performed to facilitate traffic and proper drainage before, during, or after Purchaser's use as required by Section 3. Road Maintenance Requirements Schedule.

3.2 The surface blading shall preserve the existing cross-section. Surface irregularities shall be eliminated and the surface left in a smooth, free-draining state needed to facilitate traffic. Surface Course Material which has been displaced to the Shoulders or Turnouts shall be returned to the Traveled Way. The blading operation shall be conducted to conserve Surface Material and to provide for a thorough mixing of the Material being worked.

3.3 On aggregate surfaced roads Material generated from back slope Sloughing and ditch cleaning shall not be blended with Surface or Base Course Material unless agreed otherwise

3.4 Roadway back slopes shall not be undercut.

3.5 Drainage Dips and Lead-off Ditches shall be cleaned and maintained to retain the existing line, grade, and cross-section.

3.6 Intersecting roads shall be bladed for a distance of 50 feet to assure blending of the surfaces.

3.7 Rocks or other Material remaining on the Traveled Way after the final pass that are 4 inches in diameter or larger shall be removed. The unsuitable Material shall be disposed of by side casting unless agreed otherwise. Side casting into streams, lakes, or water courses will not be permitted.

3.8 Material resulting from this activity shall not remain on or in structures, such as Culverts, cattle guards, ditches, bridges, and Drainage Dips.

3.9 Material resulting from this activity, plus any accumulated debris, shall be removed from roadway structures, such as concrete low-water crossings or fords.

WEST FOXPAW ROAD MAINTENANCE REQUIREMENTS
FS-2400-6T Contracts (06/06)
CT5.31# Special Provisions

T-8130 Spot Surface Course Placement/Replenishment

DESCRIPTION

1.1 Spot Surface Course Placement/Replenishment includes Subgrade preparation, furnishing, hauling, spreading and shaping materials in accordance with the requirements.

MATERIALS

2.1 Surface Course Material will be in accordance with the subsection 3.2 of these specifications. Only commercial sources of aggregate will be accepted, except surfacing material may also be purchased from the government, where available, by filling out a form 2600, paying the required fees, and obtaining a permit.

REQUIREMENTS

3.1 Subgrade Preparation. Prepare Subgrade to receive Surface Course Material at locations as designated on-the-ground by the Forest Service on roads listed below. Prepare the Subgrade by shaping the Roadbed to approximately the original cross-section and consistent with adjacent sections.

3.2 Furnish, haul and spread Material at locations designated on the ground by the Forest Service (FS). Compact the aggregate by operating spreading and hauling equipment over the full width of each layer of the aggregate, or by other methods as specified below.

Road Number	Type Material	Finished Compacted Thickness Specified	Total Quantity (Tons or cu.yds.)	Compaction Method
8128 (MP 0.00–0.01)	Crushed Aggregate[1/]	Surface Approach and Radii	15 CY (19.5 CY)[2/]	See 3.2 Above
8128 (MP 0.00–0.25)	Pit Run Gravel[3/]	**To Be Placed as Directed by USFS (Recurring Road Maintenance).**	30 CY (39 CY)[2/]	See 3.2 Above
8128-D (MP 0.11–0.14)	Local Borrow from MP 0.14	45'L x 12'W x 2.5'D	50 CY (65 CY)[2/]	See 3.2 Above

[1/] Furnish, Haul, Place. Must Meet M-DOT Designation 22A
[2/] Quantity of Material in ( ) = Approximate Loose Volume
[3/] Blue Jay Pit, as shown on Sale Area Map

3.3 Variations. The Purchaser will be required to furnish weight tickets to the FS for each load of commercially obtained crushed aggregate prior to the final inspection. For aggregate purchased from the government, a count of truck loads will be required in addition to finished depth checks for the placed and compacted aggregate. Widths and lengths will be as staked or from schedule. When it is mutually agreed that all or part of the Surface Course Material is not needed, the estimated cost of surfacing not placed shall be charged to the Timber Sale Account in accordance with **BT8.31**.

WEST FOXPAW ROAD MAINTENANCE REQUIREMENTS
FS-2400-6T Contracts (06/06)
CT5.31# Special Provisions

T-8310 Ditch Cleaning

DESCRIPTION

1.1 Ditch cleaning is the removal and disposal of all accumulated organic and Slough Material from Roadway ditches to provide a positive draining waterway of uniform width, depth, and grade.

REQUIREMENTS

3.1 Ditch cleaning shall be repeated during sale operations as often as necessary to facilitate proper drainage.

3.2 All Slough Material or other debris which might obstruct water flow in the Roadway ditch shall be removed. Material removed from ditches that are not suitable for blending into the existing surface course shall be disposed of in places agreed to in writing by the FSR.

3.3 Roadway back slopes shall not be undercut.

T-8340 Drainage Structure Maintenance

DESCRIPTION

1.1 This work consists of maintaining and/or installation/removal of Drainage Structures and related items such as: inlet and outlet channels, existing riprap, trash racks, necessary geotextiles, pipes, and drop-inlets.

MATERIALS

2.1 All Materials used in the maintenance and/or installation/removal of Drainage Structures shall conform by type and specification to the Material in the structure being maintained or as indicated in the subsection 3.3 below.

REQUIREMENTS

3.1 Drainage Structures and related items shall be cleared of all foreign Material deposited above the bottom of the structure and all vegetative growth which interferes with the water flow. Material removed that cannot be incorporated into maintenance work shall be uniformly placed on fill slopes unless agreed otherwise.

3.2 Perform maintenance to insure the proper functioning of the head walls, aprons, inlet assemblies, riprap, trash racks and other facilities related to the Drainage Structure.

3.3 Install/remove ditches, drainage dips, rock crossings and/or culverts as shown below, and as marked on the ground. Installation of structures shall not begin without the presence of a FSR unless agreed to in writing by the FSR.

WEST FOXPAW ROAD MAINTENANCE REQUIREMENTS
FS-2400-6T Contracts (06/06)
CT5.31# Special Provisions

Road Number	Location	Remove/Install	Type of Structure	Size	Quantity
8128	MP 1.02	Install	Outlet Ditch, Left	60'	1
8128	MP 1.13	Install	Outlet Ditch, Left	60'	1
8128-D	MP 0.12	Install[1/]	Culvert[2/]	15" x 30'	1

[1/] **Per Typical Drawings**
[2/] **Smooth lined, dual walled, high density polyethelyne drainage pipe**

3.4 Installation shall be in accordance with construction industry standards and practices.

3.5 Culverts designated for removal/disposal shall become the property of the Purchaser and shall be disposed of properly.

3.6 Temporary culverts provided by the USFS shall remain the property of the government.

3.7 Bridges. Any miscellaneous parts needing repair or replacement during normal use of any bridge during haul shall be considered maintenance. This includes minor items such as object markers, running planks that have loosened or cracked deck boards, or drainage structures which may become plugged. Bridge decks that are dirt and dust covered shall be cleaned to allow for proper drainage and for safety of the user.

T-8350 Roadway Drainage Maintenance

DESCRIPTION

1.1 This work consists of providing Post Haul drainage on roads.

MATERIALS

2.1 All Materials used in the maintenance and/or installation/removal of Drainage Structures shall conform by type and specification to the Material in the structure being maintained, or as indicated in subsection 3.3.

REQUIREMENTS

3.1 Upon completion of work, shape the roadway to provide for the removal of surface water. The roadway need not be passable to vehicles (ML-1 roads). Repair and reinstall waterbars, barriers or berms existing prior to the Purchaser's operation. Areas where water is ponded by existing centerline profile sags in through cuts may be left untreated.

WEST FOXPAW ROAD MAINTENANCE REQUIREMENTS
FS-2400-6T Contracts (06/06)
CT5.31# Special Provisions

3.2 Any of the following methods are acceptable for use at eroded or rutted locations:
(a) Method A: Outsloping the roadbed at not less than ½ inch per yard of width.
(b) Method B: Insloping the roadbed at not less than ½ inch per yard of width.
(c) Method C: Water bar roadbed at locations staked on the ground and construct as shown on the enclosed detail.
(d) Method D: Crown the roadbed as shown in the attached detail as the typical section for that length of road.

3.3 Drainage structures located in roadbed through fills and natural watercourses shall be fully functional without obstructions, including inlet and outlet channel within 20 feet of the structure **(all structures within termini indicated in CT5.31# Summary Table).**

3.5 Entrance Devices. Upon completion of work, replace entrance devices to effectively eliminate access by motorized vehicles (ML-1).

3.6 Seed and fertilize all disturbed areas in accordance with requirements set forth in T-8410 Vegetation Establishment.

T-8360 Composite High Clearance Road Maintenance

DESCRIPTION

1.1 This work consists of making limited use roads passable for project use by Purchaser and providing drainage from the traveled way and roadbed.

MATERIALS

2.1 Required materials are listed in subsection 3.2.

REQUIREMENTS

3.1 Traveled Way

A. Purchaser may smooth or fill existing cross ditches and waterbars and, by agreement, modify existing road junction to enable vehicle access. Prior to beginning haul and resumption of haul after an extended stoppage:

1. Remove brush, fallen trees, rocks, and other debris from traveled way, including turnouts, turnarounds, and other locations that interfere with needed maintenance. No object extending over 4 inches above the road surface shall remain within the 12 feet usable traveled way.
2. Center the usable width of the roadbed or position away from the fill slope.
3. Cut and remove standing or down trees, logs, brush, and limbs from within the 12 feet usable traveled way. Remove encroaching limbs to a height of 14 feet above the traveled way surface. Scatter material not meeting utilization standards outside and below the roadbed on the fill side. Limb and remove designated timber which meets utilization standards or deck at agreed locations.

WEST FOXPAW ROAD MAINTENANCE REQUIREMENTS
FS-2400-6T Contracts (06/06)
CT5.31# Special Provisions

4. Place all removed material away from drainages and in locations previously agreed to in writing by the FSR.
5. During use, maintain drainage structures including dips, ditches and culverts in a usable condition and surface in a flat, Insloped or Outsloped, or Crowned usable condition.

3.2 Drainage Facilities. Clean and recondition drainage facilities in accordance with T-8310 Ditch Cleaning and T-8340 Drainage Structure Maintenance. **See Table in T-8340 for new structures; maintain all other structures per 3.1, item 5 above within termini indicated in CT5.31# Summary Table.**

3.3 Slough and Slides

1. Slough and Slides may be left in place provided surface drainage is adequately provided and at least 12 feet of width is available for vehicle passage.
2. Purchaser may reposition or ramp over Slides and Slough when the Traveled Way is less than 12 feet providing the material is capable of supporting vehicles. Limit Outslope to no more than six percent.
3. Reposition Slough or Slide materials, which are not capable of supporting a vehicle, on the roadbed to provide the 12 feet width. When directed by Forest Service, Slough or Slide material will be removed under Section T-8320 Slide, Slump, and Erosion Repair.

3.4 Slumps, Eroded areas, and Washouts

1. Drain the roadbed immediately upgrade of Slumps and longitudinal cracks to prevent water from entering Slump area.
2. Slumps and longitudinal cracks at the edge of the roadbed shall not be considered a part of the usable width. Usable width may be reduced to ten feet in the area of the Slump.
3. Unless Forest Service agrees to material being placed on Slumps, ramp the Slumps on both ends into undisturbed roadbed to provide at least ten feet usable width. Use removed materials to guide vehicles to the ramp location or to aid in draining the area.
4. Eroded areas/washouts may be filled with suitable material and compacted by operating equipment over the fill area.

3.5 Posthaul

A. At the end of hauling or prior to entering into seasonal shutdowns or a period of extended inactivity:

1. Shape the traveled way and disturbed roadbed to provide functional drainage.
2. Reinstall removed cross ditches and waterbars and provide any additional drainage structures necessary to offset changes caused through use and maintenance.
3. Leave roads useable for high clearance vehicles. Remove or reshape Purchaser modifications at road junctions to leave the entrance as it was before use, or as agreed at the time of improvement.
4. Close all roads which were closed prieviously, using prior existing methodology.

WEST FOXPAW ROAD MAINTENANCE REQUIREMENTS
FS-2400-6T Contracts (06/06)
CT5.31# Special Provisions

T-8420 Cutting Roadway Vegetation

DESCRIPTION

1.1 This work includes removal of brush, trees and other vegetative growth from within the clearing limits. This may include brush mowing of shoulders to prevent larger growth which would inhibit travel in the future.

EQUIPMENT

2.2 Equipment use may include farm tractor mounted mowing or brushing equipment. If brushing equipment is required it must be of a size and power to cut off and masticate stems up to four inches in diameter. Larger growth may require hand clearing with a chainsaw or mechanized equipment able to handle larger trees.

REQUIREMENTS

3.1 Vegetative matter within the Roadway which impedes vehicular travel, and/or interferes with road maintenance operations, such as surface blading and ditch and culvert cleaning shall be removed. Downed timber meeting utilization standards shall be cut in appropriate lengths and decked in locations where agreed upon and the Traveled Way or sight distances will not be impaired.

3.2 Vegetative matter removed from the clearing limits shall be scattered outside the clearing limits at least 3 (and lopped to within 3 feet of ground) feet perpendicular to the road surface.

3.3 Trim tree branches that extend over the road surface and shoulders to attain a clear height of 14 feet. Trim branches flush with the tree or as close as possible without causing damage or scarring to the bole. Area shall be left neatly trimmed.

3.4 Any stump removed shall be placed in an upright position out of the clearing limits.

3.5 Area shall not be left in an unsightly condition. The FSR shall have the final say over how the area is left.

T-8620 Miscellaneous Maintenance

DESCRIPTION

1.1 Maintenance of miscellaneous structures includes cattle guards, gates (this includes all types of closure devices such as logs, rocks, dirt berms, dirt and slash berms, metal gates, etc), signs, and other similar structures that have been previously installed to insure safe and efficient operation of the road.

WEST FOXPAW ROAD MAINTENANCE REQUIREMENTS
FS-2400-6T Contracts (06/06)
CT5.31# Special Provisions

MATERIALS

2.1 Any Materials needed in the maintenance of miscellaneous structures shall be similar in type and quality to the Material in the structure being maintained.

REQUIREMENTS

3.1 Cattle guards. Loose rails shall be welded or bolted back in place.
Excess Material carried into the cattle guard shall be removed when drainage is blocked or when it reaches six inches from the bottom of the cattle guard frame. Drainage into and from the cattle guard shall be kept open.

3.2 Gates (and other closure devices). Gates shall be kept in good repair and made to swing easily. Hinges or latches shall be repaired if not operating properly. Brush and debris shall be removed from within the swinging radius. Weathered berms or wood piles shall be reconstructed to a height which discourages use and blocks the road.

3.3 Signs. Any signs needing repair or replacement shall be installed per sign placement detail or MUTCD direction. All roads shall have legible sign numbers. ML 3-5 roads shall have horizontal numbering and ML 1-2 roads shall have vertical numbers. The material used shall be as directed by the Forest Service Representative. All new signs must meet retro reflectivity requirements.

Road Number	Road Name	Location	Remove/Install	Type of Item	Size	Quantity
8128	8128	MP 0.25	Maintain	Gate	3' x 20'	1
8135	8135	Blue Jay Pit	Maintain	Gate	3' x 20'	1

WEST FOXPAW ROAD MAINTENANCE REQUIREMENTS
FS-2400-6T Contracts (06/06)
CT5.31# Special Provisions

Water Bars/Earthen Berms/Road Closure Devices (Typical Drawing)

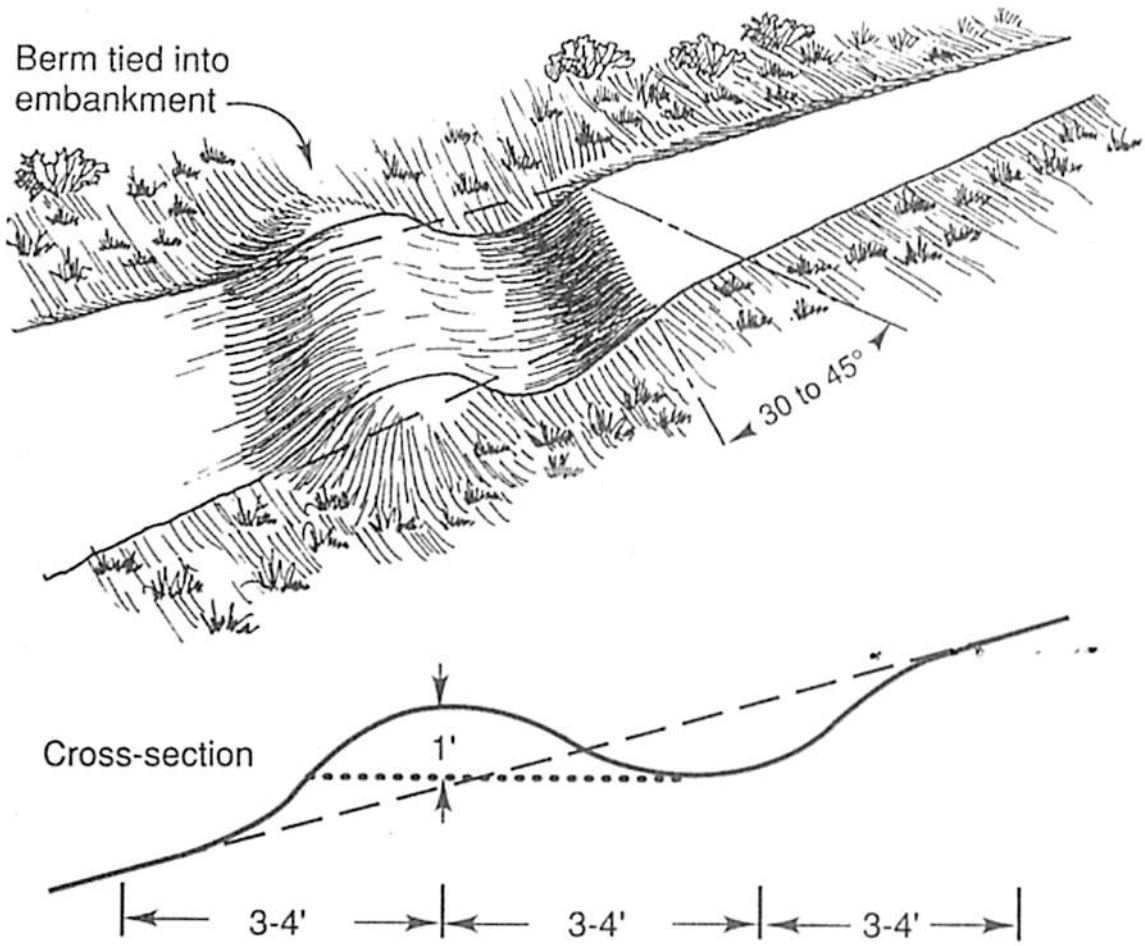

Earth berm/water bars are narrow, earthen ridges built across roads or trails. They divert water off and away from roads or trails into vegetated areas before it causes erosion. When properly built, they prevent exposed soil from moving, protecting the area until grass vegetation is firmly established.

As shown in the above drawing, the berm/water bar should be placed at an angle of 30 to 45 degrees, relative to the road, to allow for runoff to drain from the inlet, through the trench, and into the adjacent forest floor or vegetation.

Dig a trench, 12 to 18 inches below the surface of the road or trail, and extend it beyond both sides of the road or trail to prevent runoff from bypassing the water bar. The uphill end of the water bar should extend beyond the side ditch of the road and into an earth-berm to fully intercept any ditch flows. The outflow end of the water bar is to be fully open and extended far enough beyond the edge of the road or trail to safely disperse runoff water onto the undisturbed forest floor. When placement of the closure device does not require the berm to also function as a water bar for drainage, the trench will not be required.

Height of the berm will be approximately 4 feet. Rocks/boulders, logging slash, cull logs, and stumps may be incorporated into the ridge of earth during construction of the berm as long as proper drainage will be maintained and the road is completely blocked, unless otherwise agreed in writing.

WEST FOXPAW TIMBER SALE
SPECIFIED ROAD SCHEDULE OF ITEMS

Item Number	Item Description & Milepost	C or R[1]	Unit & M of M[2]	Quantity	Road Std. (W,D,S)[3]	Unit Allowance	Estimated Allowance
	FR 8128					DATE:	12/14/2015
	M.P. 0.25 - 0.86	C			W		
249 (02)	Composite Road Construction. Construct road to crown or outslope to match winter typical drawing to allow for cross drainage.		DQ Mile	0.61		7000	$ 4,270.00
	M.P. 0.25						
650 (01)	Road Closure Device. Furnish and install 3' x 20' Forest Service Steel Gate. (See typical drawings for construction/installation requirements).		EA AQ	1		1500	$ 1,500.00
	M.P. 0.53 -0.57						
202 (05)	Removal of beaver dam, 50' left of MP 0.54.		LS AQ	1		300	$ 300.00
157 (02)	Soil Erosion control, 200' silt fence. Work includes furnish and install as directed by Forest Service.		FT DQ	200		3	$ 600.00
207 (04)	Furnish **one** 22'L x18'W segment of non-woven geotextile fabric (44 SY). Place fabric under mats to cross creek and then under mats during temp bridge installation and removal. (Reuse fabric when bridge is removed).		SY DQ	44		3	$ 132.00
557 (02)	**Install crane mats** at MP 0.54 (includes pick up at Watersmeet, MI, and installation). Mats to be used to cross creek and under excavator during temp bridge placement. **(Four 20' x 4' mats, two 16' x 4' mats).**		LS AQ	1		250	$ 250.00
557 (02)	**Remove crane mats** at MP 0.54 (includes removal and delivery to Watersmeet, MI) after temp bridge is removed.		LS AQ	1		250	$ 250.00

[1]C = Construction, R = Reconstruction
[2]Method of Measure
[3]W = Winter

Prepared by Alan Pekkala 8-20-2015
Civil Engineering Technician

WEST FOXPAW TIMBER SALE
SPECIFIED ROAD SCHEDULE OF ITEMS

Item Number	Item Description & Milepost	C or R[1]	Unit & M of M[2]	Quantity	Road Std. (W,D,S)[3]	Unit Allowance	Estimated Allowance
207 (04)	Furnish and place **two 33'L x 15'W segments,** and **one 33'L x 7.5'W segment** of **non-woven Geotextile fabric** under temp bridge abuttment fill sections as directed by Forest Service.		SY DQ	138		3	$ 414.00
208 (01)	Structure Backfill. Work includes roadway excavation from MP 0.55 to MP 0.57, hauling, placing and compacting 140 C.Y. (182 C.Y. loose material) for temp bridge abuttment fill sections at MP 0.52 to MP 0.54 and MP 0.54 to MP 0.55. Material shall be mechanically compacted. **(See note)**		CY DQ	140		8	$ 1,120.00
207 (04)	Furnish and place **two 20'L x 3'W segments of non-woven Geotextile fabric** under temp bridge abuttment riprap sections.		SY DQ	14		3	$ 42.00
251 (01)	Machine placed riprap class III. Work includes furnishing and placing riprap over non-woven Geotextile in accordance with temp bridge detail. 2 x (20'L x 2.5'W x 1' D)		CY DQ	4		60	$ 240.00
571 (02)	**Install Government furnished 40' long temp bridge and sill timbers** at MP 0.54 (includes loading and hauling from Watersmeet, MI).		EA AQ	1		4000	$ 4,000.00
204 (52)	Unclassified borrow. Work includes hauling and placing 50 C.Y. (65 C.Y. loose) pit run borrow from Blue Jay Pit for road surfacing material. MP 0.53 to MP 0.54 and from MP 0.54 to MP 0.57. (144'L x 14'W x 8"D)		CY .DQ	50		11	$ 550.00

[1]C = Construction, R = Reconstruction
[2]Method of Measure
[3]W = Winter

Prepared by Alan Pekkala 8-20-2015
Civil Engineering Technician

WEST FOXPAW TIMBER SALE
SPECIFIED ROAD SCHEDULE OF ITEMS

Item Number	Item Description & Milepost	C or R[1]	Unit & M of M[2]	Quantity	Road Std. (W,D,S)[3]	Unit Allowance	Estimated Allowance
571 (02)	**Removal of government furnished 40' long temp bridge and sill timbers** at MP 0.54 (includes removing and returning bridge to Watersmeet, MI upon completion of harvest).		EA AQ	1		2000	$ 2,000.00
249 (03)	**Removal of bridge abutment fill and riprap at M.P. 0.54 upon completion of harvest.** Abutment fill and riprap are to be placed onto roadway and shaped into berms out of the floodplain, at the direction of the Forest Service. Remove and dispose of Geotextile off of government land.		EA AQ	1		800	$ 800.00
	M.P. 0.69 - 0.72						
204 (01)	Excavate 300 CY (390 C.Y. loose) local borrow, from travel way. Place onto travel way to decrease slope. (150'L x 18' W x 3'D)		CY DQ	300		5	$ 1,500.00
	M.P. 0.75 - 0.77						
204 (01)	Excavate 200 CY (260 C.Y. loose) local borrow, from travel way. Place/push onto travel way to decrease slope. (100'L x 18' W x 3'D)		CY DQ	200		5	$ 1,000.00
	FR 8128 Specified Road Total						**$ 18,968.00**
	FR 8128-F						
	M.P. 0.00 - 0.21	R			W		
249 (02)	Reconstruct road to crown or outslope to match winter typical drawing to allow for cross drainage.		DQ Mile	0.21		4000	$ 840.00
	FR 8128-F Specified Road Total						**$ 840.00**

[1]C = Construction, R = Reconstruction
[2]Method of Measure
[3]W = Winter

Prepared by Alan Pekkala 8-20-2015
Civil Engineering Technician

WEST FOXPAW TIMBER SALE
SPECIFIED ROAD SCHEDULE OF ITEMS

Item Number	Item Description & Milepost	C or R[1]	Unit & M of M[2]	Quantity	Road Std. (W,D,S)[3]	Unit Allowance	Estimated Allowance
	FR 8128-G						
	M.P. 0.00 - 0.30	C			W		
249 (02)	Composite Road Construction Construct new road to crown or outslope to match winter typical drawing to allow for cross drainage.		DQ Mile	0.3		4500	$ 1,350.00
	M.P. 0.27						
249(03)	Composite Road Construction Work includes preparing culvert bed at milepost 0.27.		LS LSQ	1		150	$ 150.00
602 (74)	Pick up and install, Forest Service provided 15" x 26' CMP from Watersmeet, MI.		LS LSQ	1		250	$ 250.00
204(01)	Excavate 40 CY local borrow from left and place into travel way over/near pipe.		CY DQ	40		5	$ 200.00
602 (74)	**Remove Forest Service provided 15" x 26' CMP. Pipe is to be delivered to Watersmeet, MI, upon completion of harvest.**		LS LSQ	1		350	$ 350.00
	FR 8128-G Specified Road Total						**$ 2,300.00**
	Grand Total West Foxpaw Specified Road Schedule of Items						**$ 22,108.00**

[1]C = Construction, R = Reconstruction
[2]Method of Measure
[3]W = Winter

Prepared by Alan Pekkala 8-20-2015
Civil Engineering Technician

WEST FOXPAW TIMBER SALE

SPECIFIED ROAD NOTES

NOTE: All finished roadbeds shall be 12' as shown in the typical details for crowned roads with no ditches, 1' ditches and out sloped roads.

NOTE: Winter standard typical roads shall be built to minimize soil disturbance and potential erosion, and to allow for proper cross drainage.

NOTE: In the narrative compacted and loose volumes are noted with loose volumes in parenthesis.

NOTE: There may be underground utility lines in unknown locations on this project. **Call MISS DIG THREE full working days before any work begins.** Phone 1-800-482-7171.

NOTE: Reconstructed roads have areas that need shaping to allow for cross drainage. When working in locations with high rock content, shaping may have to be reduced due to lack of available soil/surface conditions.

NOTE: During clear and grub operations all slash resulting from purchasers operation shall be treated as per CT 6.7#.

NOTE: There is a **gate to be furnished and installed** at the beginning of the specified construction segment of FR 8128. Construction of the gate and installation requirements are included in the AutoCAD typical drawings furnished by the Forest Service. **Gate is to be painted brown** as stated on the typical drawing. Reflective signs for gate will be provided by the Forest Service. **Sign installation, fastening hardware, resting post, and concrete product shall be provided by the purchaser.**

NOTE: There is **200' of silt fence** to be placed. See narrative description for locations and quantities to be placed. Place silt fence where directed by the Forest Service.

NOTE: There is a **40' long temporary bridge required to access the sale area**. It shall be placed on FR 8128 at M.P. 0.54. *The government will provide the temp bridge and sill timbers.* **The contractor is required to pick up, install and return the bridge and sill timbers to Watersmeet, MI, upon completion of the timber harvest.** The construction requirements for the temp bridge will be provided on the typical diagram.

NOTE: **Government furnished wooden crane mats** are required to cross Polecat Creek, and to be placed as directed under the excavator during temporary bridge installation and removal. *The contractor is required to pick up, install, and return the crane mats to Watersmeet, MI, prior to acceptance of final road maintenance.* **Geotextile separation material** shall be placed under the crane mats as noted on Schedule of Items. Geotextile Type II must be equivalent to or greater than US 205 **non- woven 8 Oz. fabric**. Geotextile is to be removed and disposed off of Government property, upon completion of the harvest.

NOTE: There are **140 C.Y. of local excavation required to build the temp bridge abutments** on FR 8128. Excavated material is to come from the roadway excavation earthwork between MP's 0.55 - 0.57 on FR 8128. **Geotextile separation material shall be placed under the bridge abutment fill as noted on the Schedule of Items.** Geotextile Type II must be equivalent to or greater than US 205 **non- woven 8 Oz. fabric**. *Abutment and Geotextile are to be removed prior to acceptance of final road maintenance.* Abutment fill is to placed upon road way out of the floodplain, as directed by the Forest Service. Geotextile is to be removed and disposed off of Government property.

NOTE: There is **4 C.Y. of class III riprap** to be furnished and placed on the temp bridge abutments on FR 8128 at M.P. 0.54. **There is no government source available for this project.** Furnished material shall be 100% smaller than 6" diameter and at least 50% larger than 3" diameter. ***Furnished material must be approved by the Forest Service.*** The construction requirements for rip rap will be provided on the typical diagram. Geotextile shall be placed under the rip rap as noted on Schedule of Items. Geotextile Type II separation material must be equivalent to or greater than US 205 **non- woven 8 ounce fabric**. *Riprap and Geotextile are to be removed prior to acceptance of final road maintenance.* Rip rap is to be placed upon road way out of the floodplain, as directed by the Forest Service. Geotextile is to be removed and disposed off of Government property.

NOTE: **There is 50 C.Y. of pitrun borrow/surfacing material required on the temp bridge approaches.** This volume plus the normal compaction factor of 130% for pitrun surfacing computes to a loose volume of 65 C.Y. The material source for this project is the **Blue Jay Pit, located at T45N, R44W, Section 2**, unless changed by agreement with the Forest Service. Some pit development may be required and is considered incidental to associated items.

NOTE: During borrow hauling operations "Trucks Hauling" signs shall be placed on FR's 8100 and 8120. Hauling shall not commence until all signs have been put in place as directed by the Forest Service.

NOTE: **There are 300 C.Y. of local excavation required to decrease the slope at M.P. 0.69 - M.P. 0.72 on FR 8128**. Excavated material is to be pushed onto the travel way to decrease the slopes.

NOTE: **There are 200 C.Y. of local excavation required to decrease the slope at M.P. 0.75 - M.P. 0.77 on FR 8128.** Excavated material is to be pushed onto the travel way to decrease the slopes.

NOTE: There is a **15" x 26' government furnished culvert** required on FR 8128-G at M.P. 0.27. *The contractor is required to pick up, install, remove, and return the culvert to Watersmeet, MI prior to acceptance of final maintenance of FR 8128-G.* The construction requirements for the culvert will be provided on the typical diagram.

Standard Specifications for Construction of Roads & Bridges on Federal Highway Projects

Specification List

Project Name: **WEST FOXPAW TIMBER SALE**

Date Prepared: **12/07/15**

Road Number:	**FR 8128** **FR 8128-F**		**8128**	**8128-F**	
Road Name:		Termini.....			
		Construction Reconstruction	**0.61**	**0.21**	
Spec. No.	**Title**				Latest Revised Edition
101 thru 109	General Requirements		X	X	2003
157	Soil Erosion Control		X		2003
202	Additional Clearing and Grubbing		X		2003
203	Removal of Structures and Obstructions		X		2003
204	Excavation and Embankment		X		2003
207	Earthwork Geotextiles		X		2003
208	Structure Excavation and Backfill		X		2003
249	Composite Road Construction		X	X	2003
251	Riprap		X		2003
301	Untreated Aggregate Courses		X		2003
602	Culverts and Drains		X		2003

NOTE: The Forest Service, US Department of Agriculture has adopted FP-03 for construction of National Forest System Roads.

Standard Specifications for Construction of Roads & Bridges on Federal Highway Projects

Specification List

Project Name: **WEST FOXPAW TIMBER SALE**

Date Prepared: **12/07/15**

Road Number:	**FR 8128-G**		**8128-G**		
Road Name:		Termini.....			
		Construction Reconstruction	**0.30**		
Spec. No.	**Title**				Latest Revised Edition
101 thru 109	General Requirements		X		2003
157	Soil Erosion Control				2003
202	Additional Clearing and Grubbing				2003
203	Removal of Structures and Obstructions				2003
204	Excavation and Embankment		X		2003
207	Earthwork Geotextiles				2003
208	Structure Excavation and Backfill				2003
249	Composite Road Construction		X		2003
251	Riprap				2003
301	Untreated Aggregate Courses				2003
602	Culverts and Drains		X		2003

NOTE: The Forest Service, US Department of Agriculture has adopted FP-03 for construction of National Forest System Roads.

WEST FOXPAW TIMBER SALE

SUPPLEMENTAL SPECIFICATIONS

Section 101-109 General Requirements

Section 157 Soil Erosion Control

Section 202 Additional Clearing and Grubbing

Section 203 Removal of Structures and Obstructions

Section 204 Excavation and Embankment

Section 207 Earthwork Geotextile

Section 208 Structural Backfill

Section 249 Composite Road Construction

Section 251 Riprap

Section 301 Untreated Aggregate Courses

Section 571 Prefabricated Bridges

Section 602 Culverts and Drains

Section 650 Road Closure Device

SUPPLEMENTAL SPECIFICATION

PREFACE

Delete all but the first paragraph and add the following:

The Forest Service, US Department of Agriculture has adopted FP-03 for construction of National Forest System Roads.

SUPPLEMENTAL SPECIFICATION

Section 101 – TERMS, FORMAT, AND DEFINITIONS

101.01 Meaning of Terms.

Add the following:

Delete all references in FP-03 to Transportation Acquisition Regulations (TAR). For Timber Sales, delete all references in FP-03 to Federal Acquisition Regulations (FAR).

101.03 Abbreviations.

Add the following to (a) Acronyms:

AFPA	American Forest and Paper Association
MSHA	Mine Safety and Health Administration
NIST	National Institute of Standards and Technology
NESC	National Electrical Safety Code
WCLIB	West Coast Lumber Inspection Bureau

Add the following to (b) SI Symbols:

mp	Milepost
ppm	Part Per Million

101.04 Definitions.

Delete the following definitions and substitute the following:

Bid Schedule--The Schedule of Items.

Bridge--No definition.

Contractor--The individual or legal entity contracting with the Government for performance of prescribed work. In a timber sale contract, the contractor is the "purchaser".

Culvert--No definition.

Right-of-Way--A general term denoting (1) the privilege to pass over land in some particular line (including easement, lease, permit, or license to occupy, use, or traverse public or private lands), or (2) Real property necessary for the project, including roadway, buffer areas, access, and drainage areas.

Add the following:

Adjustment in Contract Price--"Equitable adjustment," as used in the Federal Acquisition Regulations, or "construction cost adjustment," as used in the Timber Sale Contract, as applicable.

Change--"Change" means "change order" as used in the Federal Acquisition Regulations, or "design change" as used in the Timber Sale Contract.

Design Quantity-- "Design quantity" is a Forest Service method of measurement from the FS-96 *Forest Service Specifications for the Construction of Roads and Bridges.* Under these FP specifications this term is replaced by the term "Contract Quantities".

Forest Service--The United States of America, acting through the Forest Service, U.S. Department of Agriculture.

Neat Line--A line defining the proposed or specified limits of an excavation or structure.

Pioneer Road--Temporary construction access built along the route of the project.

Purchaser--The individual, partnership, joint venture, or corporation contracting with the Government under the terms of a Timber Sale Contract and acting independently or through agents, employees, or subcontractors.

Protected Stream course--A drainage shown on the plans or timber sale area map that requires designated mitigation measures.

Road Order--An order affecting and controlling traffic on roads under Forest Service jurisdiction. Road Orders are issued by a designated Forest Officer under the authorities of 36 CFR, part 260.

Schedule of Items--A schedule in the contract that contains a listing and description of construction items, quantities, units of measure, unit price, and amount.

Utilization Standards--The minimum size and percent soundness of trees described in the specifications to determine merchantable timber.

Add Figure 101-1—Illustration of road structure terms:

Figure 101-1—Illustration of road structure terms.

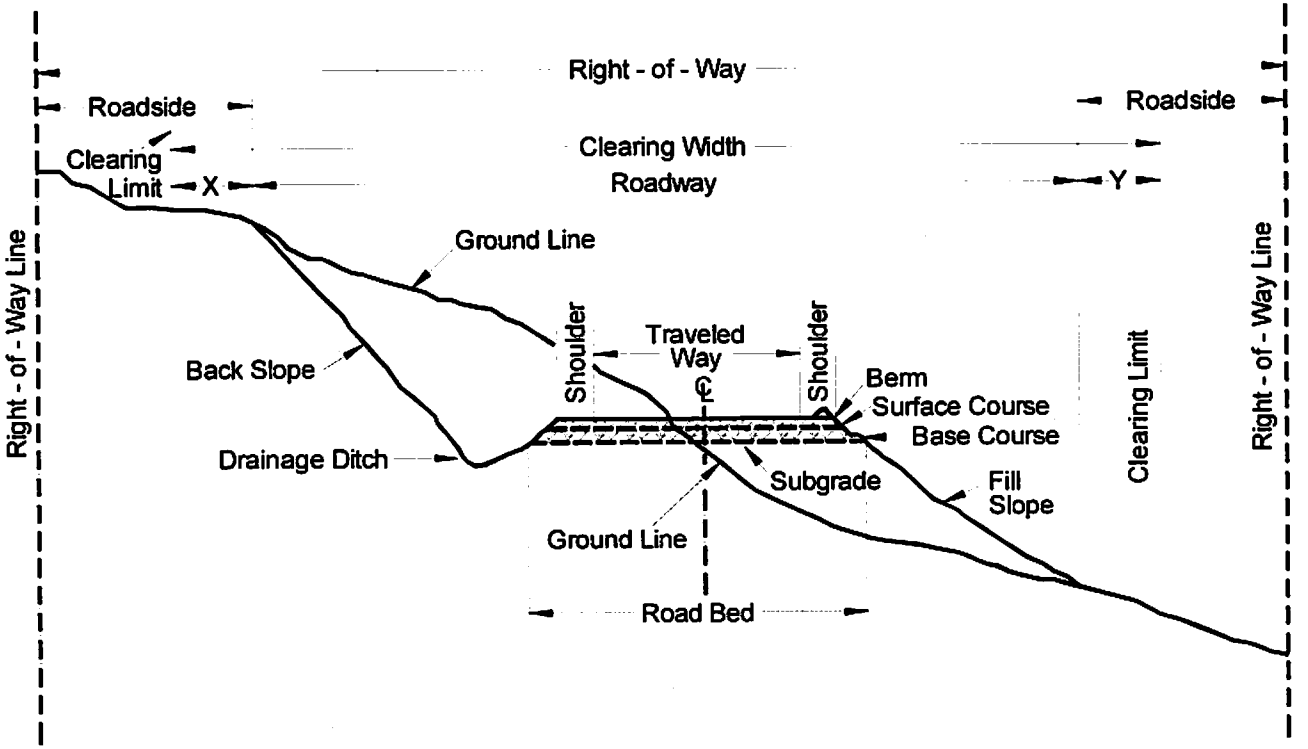

Note: Shapes and dimensions will vary to fit local conditions.
See drawings for typical sections.
X and Y denote clearing outside of roadway.

SUPPLEMENTAL SPECIFICATION

Section 102 – BID, AWARD, AND EXECUTION OF CONTRACT

102 Delete

Delete Section 102 in its entirety.

SUPPLEMENTAL SPECIFICATION

Section 103 – SCOPE OF WORK

103 Delete

Delete all but subsection 103.01 Intent of Contract.

SUPPLEMENTAL SPECIFICATION

Section 105- CONTROL OF MATERIAL

105.02 Material Sources.

105.02(a) Government Provided Sources.

Add the following:

Comply with the requirements of 30 CFR 56, subparts B and H. Use all suitable material for aggregate regardless of size unless otherwise designated. When required, re-establish vegetation in disturbed areas according to section 625.

Government-provided optional sources for this project are identified as follows:

Material is available for use as (Borrow/pitrun surfacing material) as needed for the project from Blue Jay Pit, T45N, R44W, Section 2.

There is no charge for material taken from these pits for use on this project.

105.05 Use of Material Found in the Work.

Delete 105.05 (a) and (b) and the last sentence of the second paragraph and substitute the following:

Materials produced or processed from Government lands in excess of the quantities required for performance of this contract are the property of the Government. The Government is not obligated to make reimbursement for the cost of producing these materials.

SUPPLEMENTAL SPECIFICATION

Section 106- ACCEPTANCE OF WORK

106.07 Partial and Final Acceptance.

Delete subsection 106.07

SUPPLEMENTAL SPECIFICATION

Section 107- LEGAL RELATIONS AND RESPONSIBILITY TO THE PUBLIC

107.05 Responsibility for Damage Claims.

Delete the entire subsection.

107.09 Legal Relationship of the Parties.

Delete the entire subsection.

SUPPLEMENTAL SPECIFICATION

Section 108- PROSECUTION AND PROGRESS

Delete Section 108 in its entirety.

SUPPLEMENTAL SPECIFICATION

Section 109- MEASUREMENT AND PAYMENT

109.02 Measurement Terms and Definitions

Add: One of the following methods of measurement for determining final payment is DESIGNATED on the SCHEDULE OF ITEMS for each pay item:

(a) Designated Quantities (DQ). These quantities denote the final number or units to be paid for under the terms of the contract. They are based upon the original design data available prior to advertising the project. Original design data include the preliminary survey information, design assumptions, calculations, drawings, and the presentation in the contract. Changes in the number of units SHOWN in the SCHEDULE OF ITEMS may be authorized under any of the following conditions:

(1) As a result of changes in the work authorized by the Contracting Officer.

(2) As a result of the Contracting Officer determining that errors exist in the original design that cause a pay item quantity to change by 15 percent or more.

(3) As a result of the contractor submitting to the Contracting Officer a written request showing evidence of errors in the original design that cause a pay item quantity to change by 15 percent or more. The evidence must be verifiable and consist of calculations, drawings, or other data that show how the designated quantity is believed to be in error.

(b) Staked Quantities (SQ). These quantities are determined from staked measurements prior to construction.

(c) Actual Quantities (AQ). These quantities are determined from measurements of completed work.

(d) Vehicle Quantities (VQ). These quantities are measured or weighed in hauling vehicles.

(e) Lump Sum Quantities (LSQ). These quantities denote one complete unit of work as required by or described in the contract, including necessary materials, equipment, and labor to complete the job. They will not be measured.

Quantity Measurements. The Forest Service shall make all measurements for computation of quantities for all work items except those specified for payment by Design Quantity (DQ). The Engineer shall compute the quantities for periodic payments and for final payment.

The Contractor shall certify in writing at the completion of contract work, that the quality of construction conforms to the drawings, specifications, and requirements of the Contract.

109 Deletions

Delete the following entire subsections:

109.06 Pricing of Adjustments.
109.07 Eliminated Work.
109.08 Progress Payments.
109.09 Final Payment.

SUPPLEMENTAL SPECIFICATION

Section 157. - SOIL EROSION CONTROL

157.03 General

(a) Add the following:

Prior to the start of construction, submit a written plan that provides permanent and temporary erosion control measures to minimize erosion and sedimentation during and after construction. Do not begin work until the necessary controls for that particular phase of work have been implemented.

157.16
Delete **(a), (b), & (c).**
Replace with:

(a) 50 percent of the contract quantity at the unit bid price will be paid upon installation.
(b) Payment of the remaining contract quantity at the unit bid price will be paid at completion and acceptance of the contract.

SUPPLEMENTAL SPECIFICATION

Section 203 – REMOVAL OF STRUCTURES AND OBSTRUCTIONS

203.01 Work.

Delete and replace with the following:

This work consists of disposing of clearing slash, salvaging, removing, and disposing of buildings, fences, structures, pavements, culverts, utilities, curbs, sidewalks, and other obstructions.

203.05 Disposing of Material.

(a) Remove from project. Delete second and third sentence. Add: Government furnished CMT culvert shall be removed from the project and returned to the storage yard at Watersmeet, MI.

Add the following disposal method:

(f) Scattering. Scatter construction slash outside the clearing limits without damaging trees. Limb all logs. Stumps shall be severed from all trees, and set in an upright position with their root masses resting on the ground. Place logs and stumps away from trees, positioned so that they will not roll, and are not on top of one another. Limb and scatter other construction slash to a maximum height of 3-feet.

SUPPLEMENTAL SPECIFICATION

Section 204-EXCAVATION AND EMBANKMENT

204.05 Conserved Topsoil.

Delete the subsection.

204.09 Preparing Foundation for Embankment Construction.

Delete subsection (a) and replace it with the following:

(a) Embankment less than 4 feet high over natural ground. When designated, remove topsoil and break up the ground surface to a minimum depth of 6 inches by plowing or scarifying. Compact the ground surface according to Subsection 204.11.

204.10 Embankment Construction.

Add the following:

When an embankment is to be placed across swampy ground and removal of unsuitable material or subgrade treatment is not required, the lower part of the embankment shall be constructed in a single layer to the minimum depth necessary to support construction equipment.

(c) Individual rock fragments and boulders.

Add the following:

(5) Such rocks and boulders shall be at least 6 inches below subgrade.

204.11 Compaction.

Add the following:

All embankments shall be placed and compacted by one or more of the following methods as SHOWN ON THE DRAWINGS and listed in the SCHEDULE OF ITEMS.

Add the following compaction method:

(d) Layer Placement Method (Hauling and Spreading Equipment). Place material by end dumping to the minimum depth needed for operation of spreading equipment. Level and smooth each embankment layer before placing the next layers. Operate hauling and spreading equipment uniformly over the full width of each layer. Construct a solid embankment with adequate compaction by working smaller rock and fines in with the larger roocks to fill the voids, and by operating hauling and spreading equipment uniformly over the full width of each layer as the embankment is constructed.

(e) Layer Placement Method (Roller Compaction). Place material by end dumping to the minimum depth needed for operation of spreading equipment. Adjust the moisture content of the material to obtain a mass that will not visibly deflect under the load of the hauling and spreading equipment. Operate compaction equipment over the full width of each layer until visible deformation of the layer ceases or, in when a sheepsfoot roller is used, the roller "walks out" of the layer. Make at least three complete passes.

204.13 Sloping, Shaping, and Finishing.

(a) Sloping.

Add the following:

Slope rounding is not required on tolerance class D though M roads.

(c) Shaping.

Add the following:

When excavation is measured on a station basis, excavating, placing of embankment, and shaping and compacting the roadway template shall include only those areas where cuts and fills are generally less than five feet in depth as measured from the finished shoulder grade to the top of the adjacent cut or toe of fill. These areas of station grading shall consist of light dozing or grading of such character that the excavation from backslopes, ditches, and roadbed shall be used in shaping the subgrade, shoulders, and adjacent fills.

When excavation is measured by the station (station grading) as designated in the SCHEDULE OF ITEMS, turnouts, side entrances, approaches, radii and T-turnarounds shall not be measured separately, but will be included as part of the station measurement along the construction centerline.

This work shall include all necessary scarifying, dozing, disking, moving, shaping, and compacting to develop the cross-sections SHOWN ON THE DRAWINGS. Loading and hauling will not be included or required in the work.

Compaction of the subgrade shall be accomplished with the construction and hauling equipment.

Delete section (d) and add the following:

(d) Finishing. For surfaced roads, remove all material larger than 6 inches from the top 6 inches of the roadbed. For all roads, finish the roadbed to be smooth and uniform, and shaped to conform to the typical sections. Remove unsuitable material from the roadbed and replace it with suitable material. Finish roadbeds to the tolerance class shown in table 204-2.

Ensure that the subgrade for both surfaced and unsurfaced roads is visibly moist during shaping and dressing. Bring low sections, holes, cracks, or depressions to grade with suitable material. Maintain proper ditch drainage.

For unsurfaced roads, use one of the following methods to finish the roadbed

(1) Method A. Remove all material larger than 6 inches from the top 6 inches of the roadbed and replace with suitable material.

(2) Method B. Use a vibratory grid roller or approved equal with a minimum weight of 10 tons. Roll at least 5 full-width passes or until visible displacement ceases.

(3) Method C. For roads designated as Construction Tolerance Class K, L, or M, finish the roadbed by spreading the excavation. Eliminate rock berms.

Add Table 204-2—Construction Tolerances:

Table 204-2 Construction tolerances.

	Tolerance Class[a]												
	A	B	C	D	E	F	G	H	I	J	K	L	M
Roadbed width (ft)	+0.5	+0.5	+1.0	+1.0	+1.0	+1.0	+1.5	+1.0	+2.0	+2.0	+2.0	+2.0	+2.0
Subgrade elevation (ft)	±0.1	±0.2	±0.2	±0.5	+0.5	±1.0	±1.0	±1.5	±2.0	±3.0	±2.0	±3.0	(c)
Centerline alignment (ft)	±0.2	±0.2	±0.5	±0.5	±1.0	±1.0	±1.5	±1.5	±2.0	±3.0	±3.0	±5.0	(c)
Slopes, excavation, and embankment (% slope[b]	±3	±5	±5	±5	±5	±5	±10	±10	±10	±10	±20	±20	±20

a. Maximum allowable deviation from construction stakes and drawings.

b. Maximum allowable deviation from staked slope measured from slope stakes or hinge points.

c. Unless otherwise shown the centerline alignment and subgrade elevation, as built, have no horizontal curves with a radius of less than 80 feet, and no vertical curves with a curve length of less than 80 feet when the algebraic difference in the grade change is less than 10 percent, or a curve length of less than 100 feet when the algebraic difference of the grade change is greater than or equal to 10 percent. The centerline grade is not to exceed 20 percent in 100 feet of length.

204.16

(b) Unclassified borrow, select borrow, and select topping.

Add the following:

When borrow is designated as a pay item by the cubic yard in the SCHEDULE OF ITEMS, measurement will be in the final position.

SUPPLEMENTAL SPECIFICATION

Section 208. –STRUCTURE EXCAVATION AND BACKFILL FOR SELECTED MAJOR STRUCTURES

Construction Requirements

208.04 General.

Delete the following: Excavate trenches or foundation pits to a width and length that allows room for work.

And replace with the following:
Excavate trenches for culverts at least as wide as one diameter plus one diameter or span of the structure on each side or 12 feet, whichever is less, with a minimum of two feet on each side.

208.10 Backfill

Add after the second sentence:

On each side of the pipe there shall be an area of compacted material at least as wide as one diameter or span of the structure, with a minimum of two feet or a maximum of twelve feet.

Measurement

208.13 Delete (a), Replace with:

(a) Material excavated outside vertical planes located one pipe diameter or span or a maximum of 12 feet outside and parallel to the limits of the footings or foundations.

SUPPLEMENTAL SPECIFICATION

Section 249. – COMPOSITE ROAD CONSTRUCTION

Description

249.01 This work consists of clearing and grubbing, excavation and embankment, and removal of all construction slash including all trees designated for removal. Excavation and embankment includes on site borrow excavation; drainage

excavation; placing all excavated material; and shaping the roadway; including approaches, turnarounds, ditches and drainage dips. Construct the roadway in conformance with the dimensions "shown on the plans" or as staked on the ground.

Construction Requirements

249.02 Clearing & Disposal

Protect construction stakes and construction control markers. Remove or treat all trees, snags, downed timber, brush, and stumps within the clearing limits according to the following specifications.

(a) Merchantable Timber. Treat according to the Utilization Standards of the Timber Sale Contract.

(b) Unmerchantable Timber. Treat according to Subsection 249.02 Method A.

(c) Large Construction Slash. Treat construction slash larger than 3 inches in diameter and longer than 3 feet by one or more of the following methods.

(1) Method A. Construction slash shall be scattered outside the clearing limits without damaging trees outside the clearing area. Logs shall be placed away from trees, positioned so that they will not roll, not placed on top of one another or left leaning on other trees. Scattered stumps shall be placed in an upright position.

(2) Method B. Stumps, roots, rocks, topsoil and other grubbing debris shall be concentrated in stump dump areas. Stump dump areas shall be located by the Engineer, be a maximum of 300 feet apart along the road centerline, and generally be located in natural depressions or tucked away behind denser vegetation or ground rises. Stump dumps will vary in size depending on each site, but shall not be closer than 10 feet outside of the clearing limits. Stump dump material shall be matted down as much as possible and shall not obstruct natural drainages.

(d) Small Construction Slash. Construction slash less than 3 inches in diameter and less than 3 feet in length may be incorporated into embankments so long as the material is distributed so that it does not result in concentrations or matting.

Immediately remove slash deposited in stream courses.

249.03 Pioneering.

Do not undercut the final back slope during pioneer operations. Deposite material inside the roadway limits. Do not restrict drainages.

249.04 Grubbing.

Grub within the specified limits. Stumps outside the grubbing limits remain if cut no higher than 1 foot or one-third of the stump diameter, whichever is greater, above the original ground, measured on the uphill side, unless otherwise designated. Grub all stumps from the Roadway, or stumps that have less than 1 foot of cover, in the Fill slopes, providing they do not interfere with the placement or compaction of embankments.

249.05 Excavation and Embankment.

Construct the roadway to conform to the typical sections shown on the plans. Protect backslopes from being undercut. Embankment shall be placed in layers no more than 12 inches thick.

Locate and use borrow material, and remove and treat unsuitable excess material, as designated.

Place rocks that are too large to be incorporated in the embankment outside the traveled way on the downhill side such that they will not roll, obstruct drainage, or hinder roadbed use and maintenance.

Shape and finish the roadbed to the condition ordinarily accomplished by a crawler tractor with dozer blade to provide drainage of surface water. Do not permit individual rocks to protrude more than 4 inches above the subgrade of the roadbed. A motor grader finish is not required.

Observe a width tolerance of (+) 18 inches max. for the roadbed.

Where shown on the drawings or designated on the ground, offtake ditches shall be constructed to drain water away from the roadbed.

249.06 Erosion Control.

Perform erosin control measures, where shown on the drawings, or staked on the ground.

Measurement

249.07 Method.

Measure the section 249 items listed in the schedule of items according to subsection 109.02

Payment

249.08 Basis.

The accepted quantities will be paid at the contract price per unit of measurement for Section 249 pay items listed in the Bid Schedule. Payment will be full compensation for the work prescribed in this section. See Subsection 109.05

SUPPLEMENTAL SPECIFICATION

Section 251 - RIPRAP

251.04 Add: Place geotextile under all placed riprap.

SUPPLEMENTAL SPECIFICATION

Section 301- UNTREATED AGGREGATE COURSES

301 Title Change.
Change the title to:

Section 301- AGGREGATE COURSES

301.01 Work.
Add the following:

Work includes producing aggregate by pit-run, grid rolling, screening, or crushing methods, or placing Government furnished aggregate. Work may include additive mineral filler, or binder.

301.03 General.
Add the following:

Request approval in writing of the roadbed before placing aggregate.

For pit run or grid-rolled material, furnish material smaller than the maximum size. No gradation other than maximum size will be required for pit-run or grid-rolled material. For grid rolling, use all suitable material that can be reduced to maximum size. After processing on the road, remove all oversize material from the road and dispose of it as directed by the CO.

Provide additives or binder, if required, at the proportions specified.

Develop and use Government furnished sources according to Section 105.

If the aggregate is produced and stockpiled before placement, handle and stockpiled according to Section 320. Establish stockpile sites at locations approved. Clear and grub stockpile sites according to Section 201.

301.04 Mixing and Spreading.

Delete the first sentence of the first paragraph and add the following:

Ensure that aggregate and any required additives, water, mineral filler, and binder are mixed by the specified method except, if crushed aggregate products are being produced and mineral filler, binder, or additives are required, uniformly blend during crushing. Control additive proportions to 0.5 percent dry weight.

The aggregate shall be spread in a uniform layer, with no segregation of size, and to a loose depth that shall have the required thickness when compacted.

Stationary Plant Method. Mix the aggregate with other required materials in an approved mixer. Add water during the mixing operation in the amount necessary to provide the moisture content for compacting to the specified density. After mixing, transport the aggregate to the jobsite while it contains the proper moisture content, and place it on the roadbed or base course using an aggregate spreader.

Travel Plant Method. After placing the aggregate for each layer with an aggregate spreader or windrow-sizing device, uniformly mix it with other required materials using a traveling mixing plant. During mixing, add water to provide the necessary moisture content for compacting.

Road Mix Method. After placing the aggregate for each layer, mix it with other required materials at the required moisture content until the mixture is uniform throughout. Mix aggregate, water, and all other materials until a uniform distribution is obtained.

Spread the aggregate in a uniform layer, with no segregation of size, and to a loose depth that will provide the required compacted thickness.

When placing aggregate over geotextile, place aggregate in a single lift to the full depth specified.

Route and distribute hauling and leveling equipment over the width and length of each layer.

301.05 Compacting.

Delete the first and third paragraphs and add the following:

Compact the aggregate using one of the following methods as specified:

(a) Compaction A. Compact the aggregate by operating spreading and hauling equipment over the full width of each layer of the aggregate.

(b) Compaction B. Moisten or dry the aggregate to a uniform moisture content between 5 and 7 percent based on total dry weight of the mixture. Operate rollers and compact as specified in Subsection 204.11(a).

(c) Compaction C. Compact each layer of aggregate to a density of at least 95 per-cent of the maximum density, as determined by AASHTO T 99, method C or D.

(d) Compaction D. Compact each layer of aggregate to a density of at least 95 percent of the maximum density, as determined by AASHTO T 180, method C or D.

(e) Compaction E. Operate rollers and compact as specified in Subsection 204.11(a).

For all compaction methods, blade the surface of each layer during the compaction operations to remove irregularities and produce a smooth, even surface. When a density requirement is specified, determine the in place density and moisture content according to AASHTO T 310 or other approved test procedures.

301.06 Surface Tolerance.

Add the following:

Thickness and Width requirements:

The thickness of the compacted nominal aggregate shall not vary more than ½ inch for aggregates with a maximum particle size of 1 inch or less, nor more than 1 inch for aggregates with a nominal maximum particle size greater than 1 inch from the thickness SHOWN ON THE DRAWINGS. The compacted thickness shall not be consistently above or below the specified thickness.

301.09 Measurement.

Delete:
Measure aggregate by the cubic yard in the hauling vehicle and substitute with the following:

Measure aggregate by cubic yard compacted in place when payment is by contract quantities.

Payment

When materials are produced and furnished by the Forest Service, the note "Government furnished materials" will be added to the description of the pay item.

Section 571- PREFABRICATED BRIDGES

Description

571.01 Delete 571.01 in its entirety and substitute with the following:

571.01 This work shall consist of transportating and installing Government-furnished prefabricated, modular superstructures and components. The work also includes constructing caps, bearings, and abutments including excavation and backfill and anchoring bridge superstructures to abutments as required to complete the work.

Construction Requirements

571.05 General.

Perform excavation, backfill, and embankment work under Sections 204 and 209.

571.07 Abutments and Approaches.

Construct required caps, bearing, and abutments according to Division 500. Construct approaches including excavation and backfill according to sections 204 and 209.

571.09 Government-Furnished Prefabricated Bridge Superstructures.

For Government-Furnished prefabricated bridge units, transport all material from the storage site(s) to the bridge site, and install the superstructure complete and in place, including connection of all girders, diaphrams, railings, panels, transoms and other elements.

Upon taking possession of the Government-furnished units at the storage site, assume liability for damage resulting from handling, transporting, or erecting the units in place, until final acceptance of the project.

Payment

571.13 The accepted quantities, measured as provided in Subsection 109.02 and above, will be paid at the contract price per unit of measurement for Section 571 pay items listed in the bid schedule. Payment will be full compensation for the work prescribed in this Section. See Subsection 109.05

Section 602- CULVERTS AND DRAINS

Description

602.01 Delete 602.01 in its entirety and substitute with the following:

602.01 This work shall consist of furnishing and installing, or installing only, metal pipe and Corrugated High Density Polyethylene (HDPE) with smooth interior and pipe appurtenances, including all bedding and backfilling required to complete the work. The term metal refers to aluminum and steel.

Material

602.02 Add: Corrugated High Density Polyethylene Drainage Pipe shall meet the requirements of AASHTO M252, ASTM F405, and ASTM 667 and be non – perforated. Advance Drainage systems N – 12 pipe meets these requirements.

602.03 General.

Add the following:

Ensure that the final installed alignment of all pipe allows no reverse grades, and does not permit horizontal and vertical alignments to vary from a straight line drawn from center of inlet to center of outlet by more than 2 percent of pipe center length or 1.0 foot, whichever is less.

Backfill material shall be readily compactible material free of frozen lumps, chunks of highly plastic clay (Plasticity Index greater than 10), or other objectional material. Rocks larger than 3 inches in greatest dimension shall not be used within 1 foot of the pipe.

Payment

When materials are produced and furnished by the Forest Service, the note "Government furnished materials" will be added to the description of the pay item.

Section 650— ROAD CLOSURE DEVICES

Description

650.01 Work. Furnish and install, or install only, road closure devices using fabricated gates and accessories, combination post and rail barriers, concrete barriers, earth mound

barriers, and other devices.

Materials

650.02 Requirements.

Furnish concrete that meets the requirements of Subsection 601.03, method B or C.

Construct earth mound barriers from excavated material adjacent to the barrier location, or from other designated locations.

Construction

650.03 Performance. Place road closure devices at designated locations. Construct all devices to the required dimensions. In assembling gates, perform required welding in accordance with the best modern practice and the applicable requirements of AWS D1.1.

After assembly, clean non-galvanized steel pipe gates and paint them with one coat of zinc-rich primer and two coats of exterior enamel of the required type and color.

Set all posts vertically and embed them to the required depth. Place concrete for embedment against undisturbed earth within an excavation sized to achieve the embedment dimensions. Compact the backfill in 6 inch layers to finished grade.

Install all signs and/or reflective warning markers accessory to the road closure device as shown on DRAWINGS.

650.04 Acceptance. Construction of road closure devices will be evaluated under Subsections 106.02 and 106.04.

Measurement

650.05 Measure the items listed in the bid schedule according to Subsection 109.02.

Payment

650.06 The accepted quantities, measured as provided in Subsection 109.02 and above, will be paid at the contract price per unit of measurement for the Section 650 pay item listed in the bid schedule. Payment will be full compensation for the work prescribed in this Section. See Subsection 109.05.

When materials are produced and furnished by the Forest Service, the note "Government furnished materials" will be added to the description of the pay item.

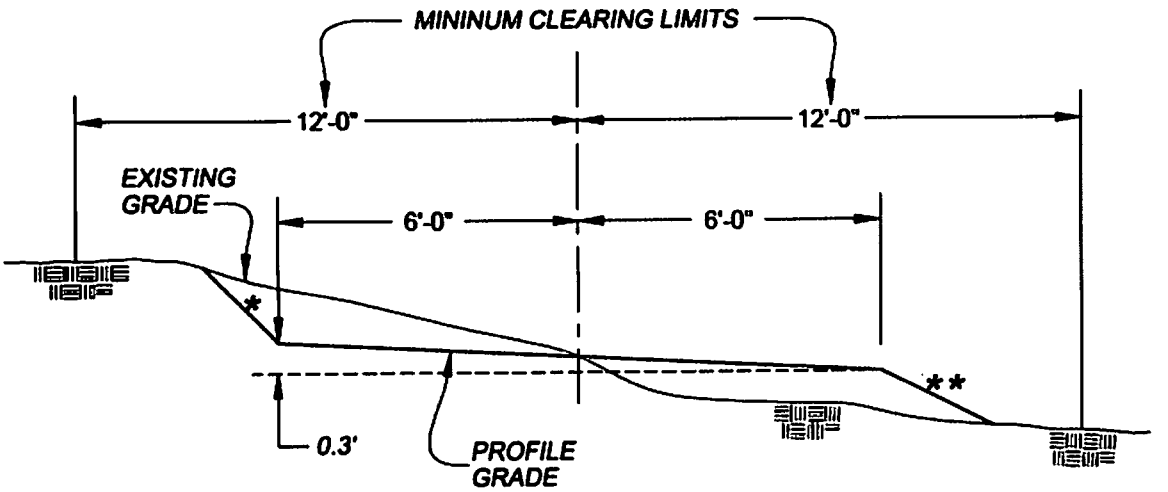

CUT SECTION FILL SECTION

TYPICAL OUTSLOPE DETAIL

NOT TO SCALE

*BACKSLOPE AND DITCH SLOPES MAY VARY FROM 1H:1V TO 2H:1V WHEN CUTS ARE UNDER 2 FT. CUTS OVER 2 FT. SHALL HAVE SLOPES OF 2H:1V

**FILL SLOPES MAY VARY FROM 1-1/2H:1V TO 3H:1V

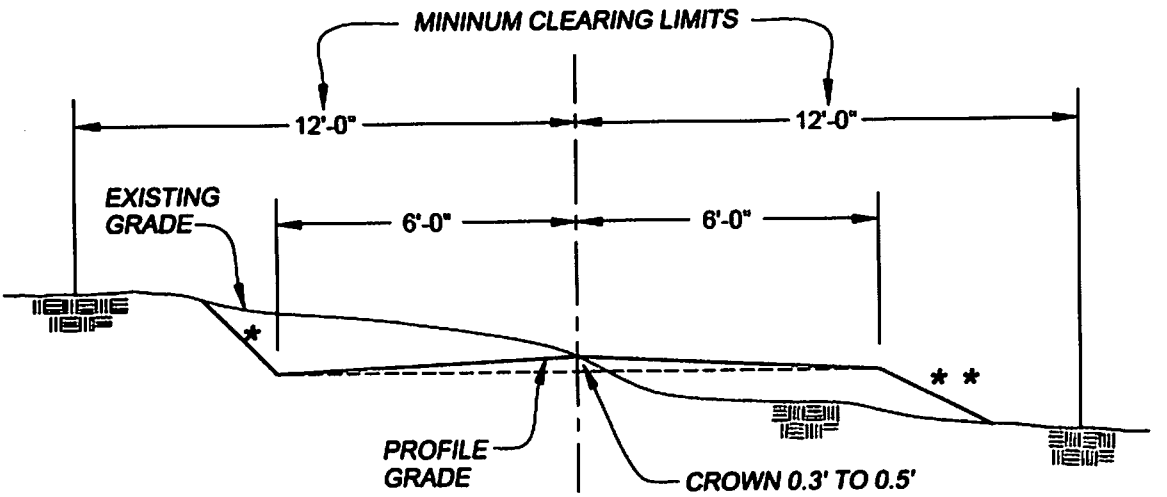

CUT SECTION FILL SECTION

TYPICAL CROSS SECTION CROWN NO DITCHES

NOT TO SCALE

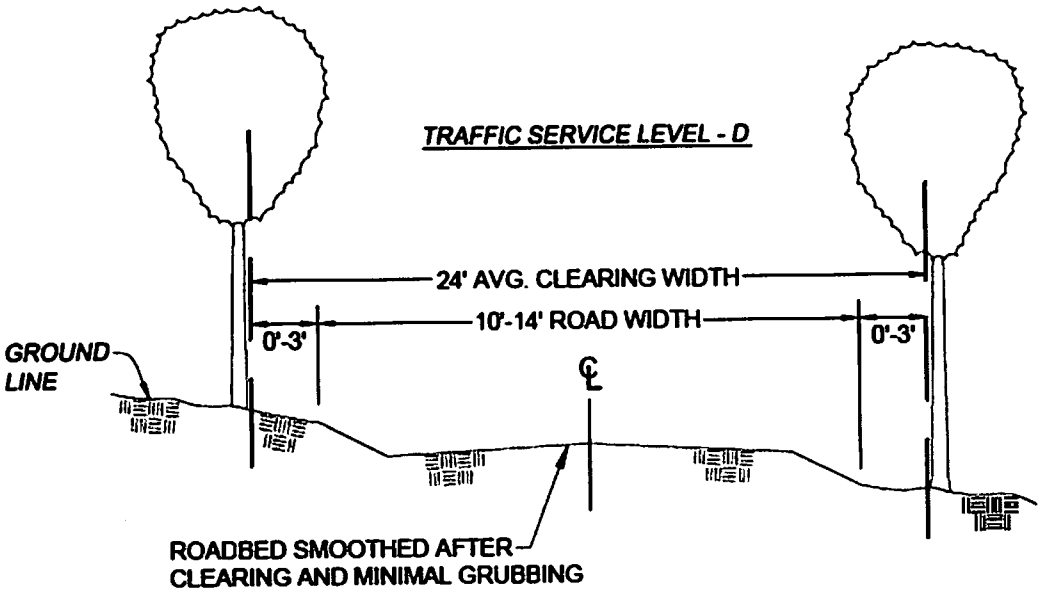

CROSS SECTION VIEW

WINTER ONLY ROAD STANDARD

NOT TO SCALE

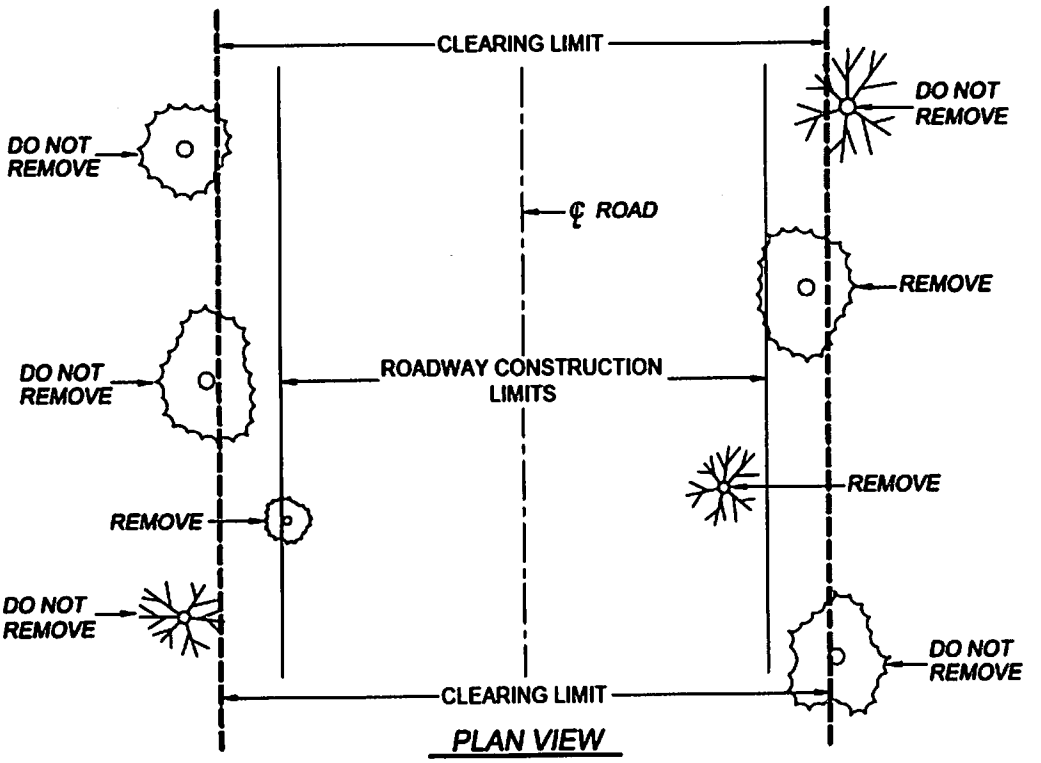

NOTE: TREES ON THE CLEARING LIMIT LINE ARE TO REMAIN UNLESS OTHERWISE DESIGNATED BY THE ENGINEER.

NOTE: YELLOW PAINT INDICATES TREES TO BE REMOVED.

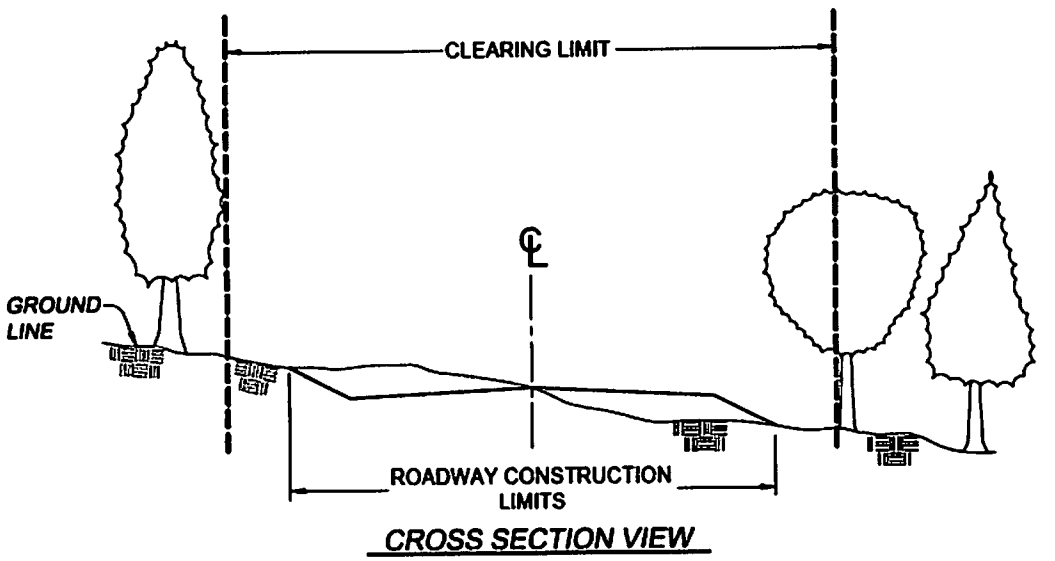

CONSTRUCTION STAKING
NOT TO SCALE

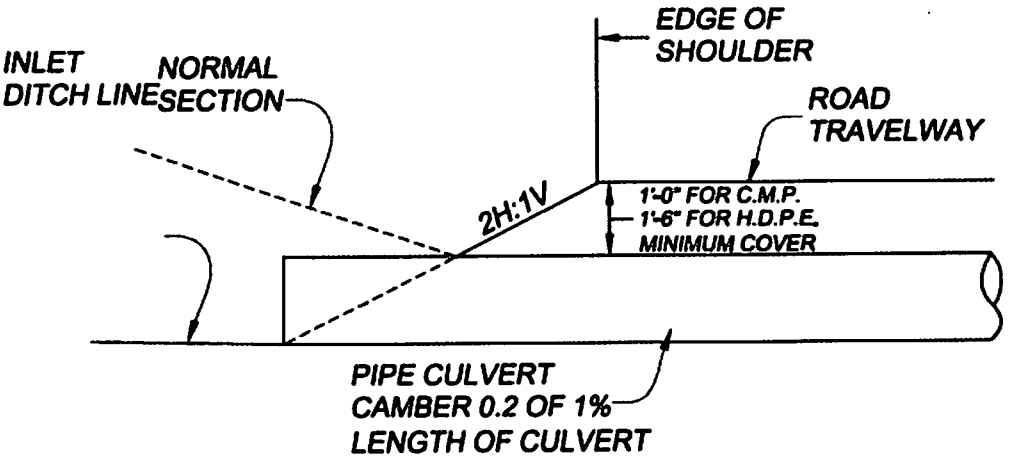

TYPICAL DITCH SECTION AT CULVERT INLET

NOT TO SCALE

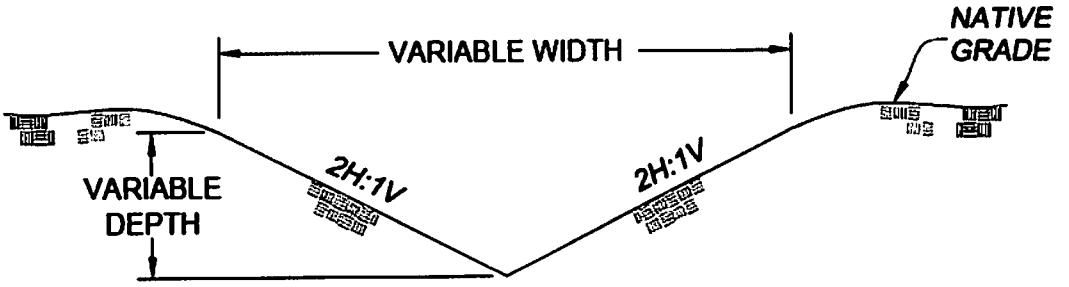

TYPICAL INLET AND OUTLET DITCH SECTION

NOT TO SCALE

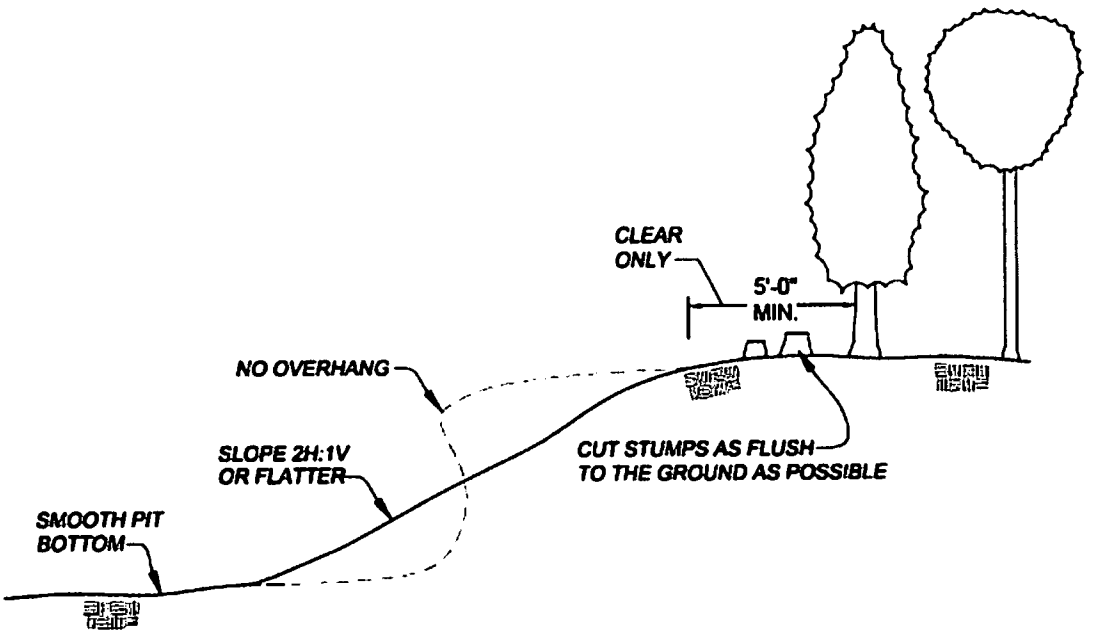

NOTE: TOPS, STUMPS AND TRUNKS SHALL BE DISPOSED OF AS DIRECTED BY THE ENGINEER. STUMPS SHALL BE SEVERED FROM ALL TREES. ALL TIMBER SHALL REMAIN PROPERTY OF THE GOVERNMENT. OVERSIZED ROCK SHALL BE DISPOSED OF IN EXISTING PILES OR AS DIRECTED BY THE ENGINEER. SMOOTH PIT BOTTOM TO REDUCE THE COLLECTION OF WATER. HAUL ROADS SHALL BE MADE SMOOTH AND REPAIRED OF DAMAGE CAUSED BY THE CONTRACTORS HAULING OPERATION OR EQUIPMENT.

BORROW PIT CLEAN UP

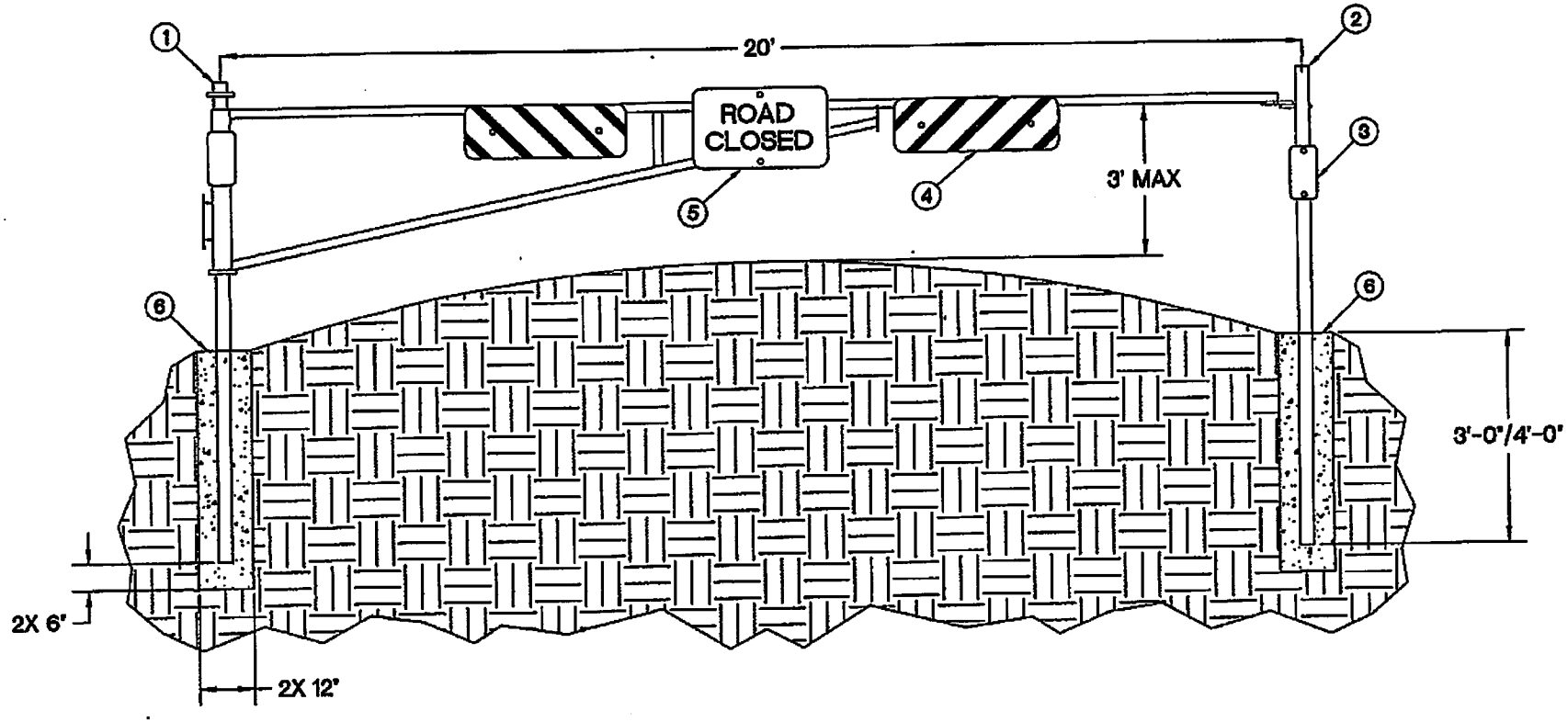

GATE INSTALLATION

ITEM	PART NO	QTY	DESCRIPTION
1	101	1	GATE SWING ASS'Y
2	099	1	LOCK POST ASS'Y
3	—	5	SIGN, YELLOW OBJECT MARKER
4	—	4	SIGN, RED AND WHITE GATE MARKERS
5	—	1	SIGN, ROAD CLOSED
6	—	2	BACRETE, 0.2 CUBIC YARDS (METHOD C)
7	—	1	4" X 4" X 6' TREATED LUMBER (NOT SHOWN)

NOTES:

1. GATE SHALL BE LOCATED BY THE ENGINEER.
2. TOUCH UP THE FINISH IN ANY AREAS THAT WERE DAMAGED DURING INSTALLATION.
3. ITEMS 3, 4 AND 5 (SIGNS AND MARKERS) WILL BE PROVIDED BY THE FOREST SERVICE, WITH INSTALLATION TO BE DONE BY THE PURCHASER. THE PURCHASER IS RESPONSIBLE FOR ALL ATTACHMENT HARDWARE.
4. ITEM 7 (NOT SHOWN) IS A RESTING POST FOR THE GATE WHEN IT IS OPEN. THE POST SHALL BE BURRIED TO A DEPTH OF 2 TO 3 FEET AND CUT TO THE APPROPRIATE HEIGHT. LOCATE PER THE ENGINEER.

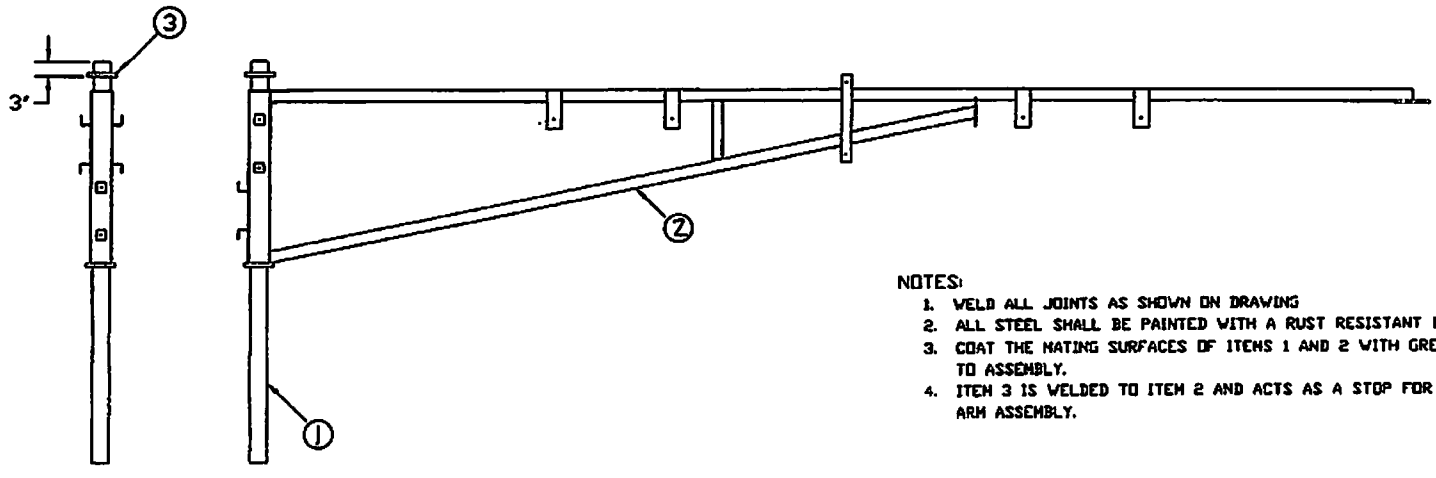

NOTES:

1. WELD ALL JOINTS AS SHOWN ON DRAWING
2. ALL STEEL SHALL BE PAINTED WITH A RUST RESISTANT BROWN PAINT.
3. COAT THE MATING SURFACES OF ITEMS 1 AND 2 WITH GREASE PRIOR TO ASSEMBLY.
4. ITEM 3 IS WELDED TO ITEM 2 AND ACTS AS A STOP FOR THE SWING ARM ASSEMBLY.

ITEM	PART NO	QTY	DESCRIPTION
1	098	1	SWING POST
2	100	1	SWING ARM
3	--	1	4" SCHEDULE 40 X 3/4" PIPE

GATE SWING ASSEMBLY

PART #101

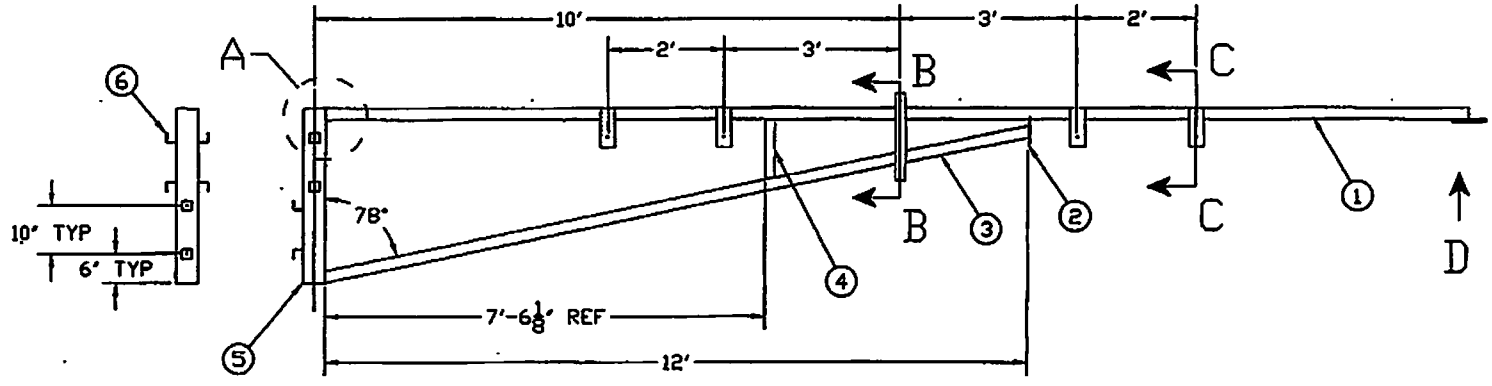

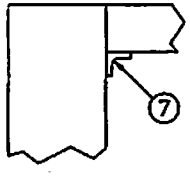

DETAIL A

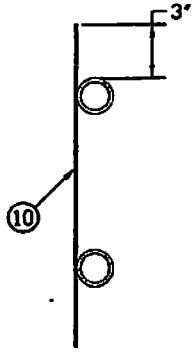

SECTION B-B

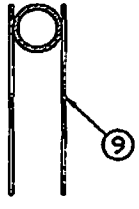

SECTION C-C
4 PLACES

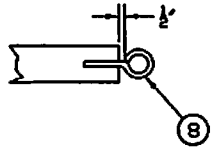

VIEW D

ITEM	PART NO	QTY	DESCRIPTION
1	—	1	2" SCHEDULE 40 X 19'-4" PIPE
2	007	1	ARM SUPPORT
3	—	1	2" SCHEDULE 40 X 12'-6" PIPE
4	—	1	2" SCHEDULE 40 X 12" PIPE
5	--	1	4" SCHEDULE 40 X 3' PIPE
6	003	6	SIGN BRACKET
7	002	1	STEEL ANGLE
8	004	1	EYE BOLT
9	001	8	SIGN BRACKET
10	005	1	SIGN BRACKET

NOTES:

1. WELD ALL JOINTS AS SHOWN ON DRAWING
2. ALL STEEL SHALL BE PAINTED WITH A RUST RESISTANT BROWN PAINT.

WELDMENT - SWING ARM

PART #100

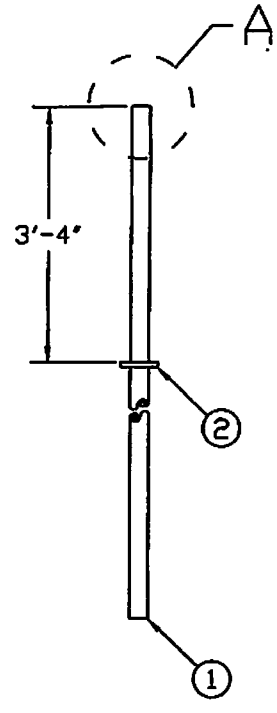

NOTES:

1. WELD ALL JOINTS AS SHOWN ON DRAWING
2. ALL STEEL SHALL BE PAINTED WITH A RUST RESISTANT BROWN PAINT.
3. ITEM 2 IS WELDED TO ITEM 1 AND ACTS AS A STOP FOR THE SWING GATE ASSEMBLY.
4. ALL LOCATION DIMENSIONS APPLY PRIOR TO CAP INSTALLATION.

ITEM	PART NO	QTY	DESCRIPTION
1	--	1	3" SCHEDULE 40 X 7' PIPE
2	--	1	4" SCHEDULE 40 X 3/4" PIPE
3	003	1	POST CAP

WELDMENT - SWING POST

PART #098

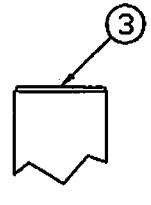

DETAIL A

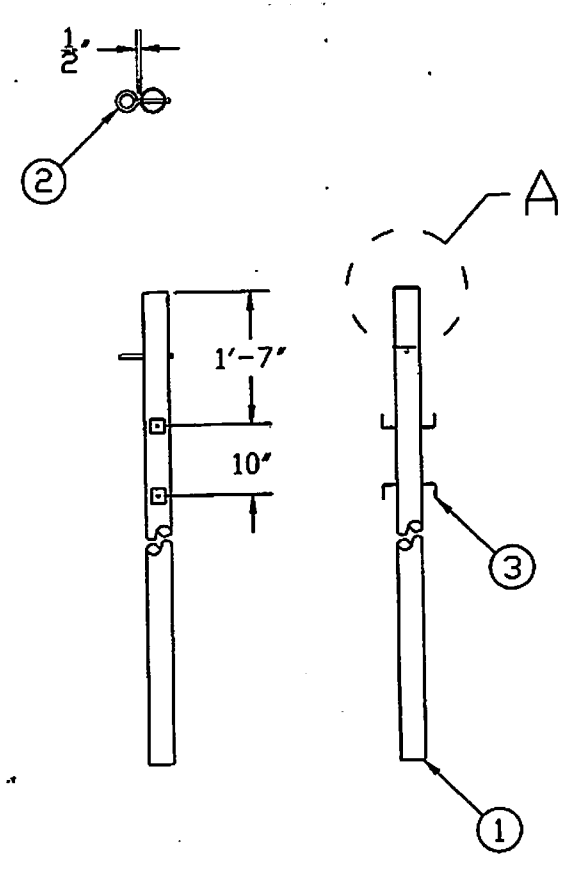

NOTES:

1. WELD ALL JOINTS AS SHOWN ON DRAWING
2. ALL STEEL SHALL BE PAINTED WITH A RUST RESISTANT BROWN PAINT.
3. ALL LOCATION DIMENSIONS APPLY PRIOR TO CAP INSTALLATION.

ITEM	PART NO	QTY	DESCRIPTION
1	006	1	STEEL PIPE
2	004	1	EYE BOLT
3	008	4	SIGN BRACKET
4	003	1	POST CAP

WELDMENT - LOCK POST

PART #099

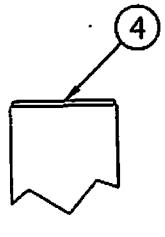

DETAIL A

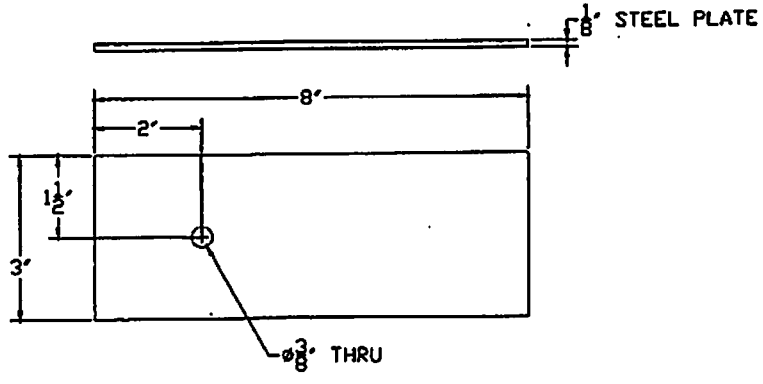

PART #001 - SIGN BRACKET

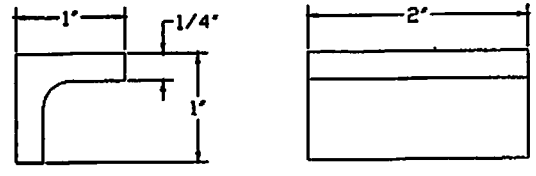

PART #002 - STEEL ANGLE

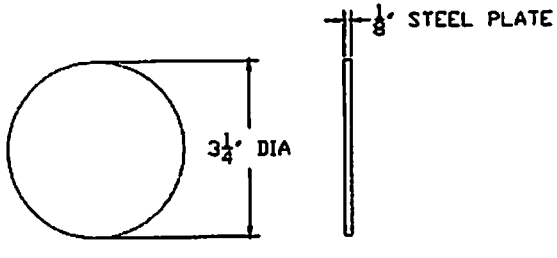

PART #003 - POST CAP

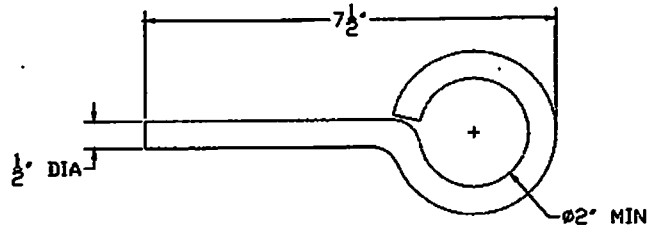

PART #004 - EYE HOOK

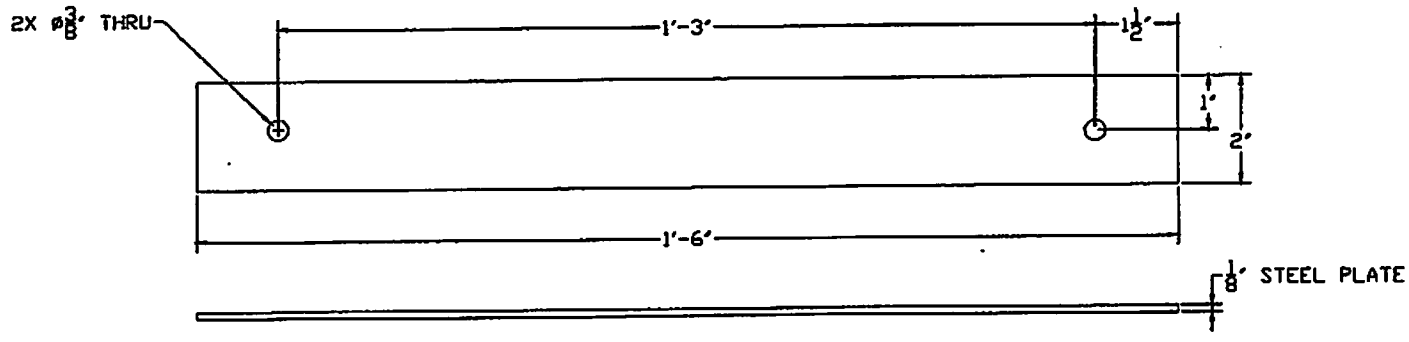

PART #005 - SIGN BRACKET

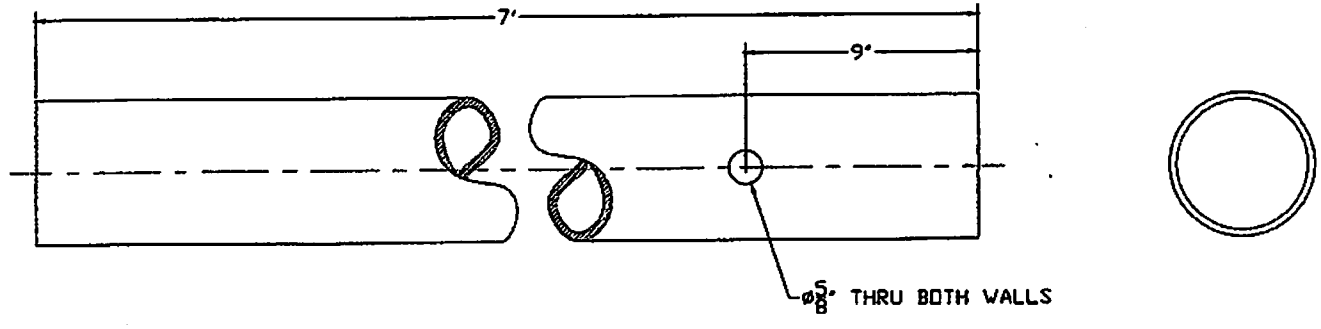

NOTE:
1. 3" SCHEDULE 40 PIPE

PART #006 - LOCK POST

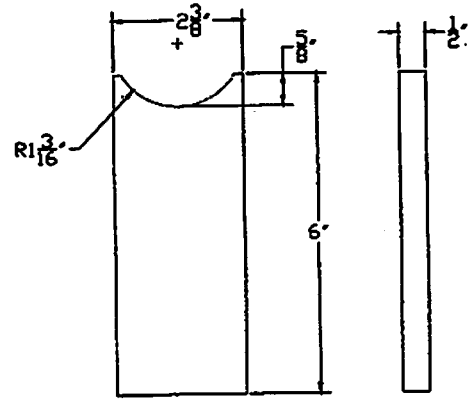

PART #007 - ARM SUPPORT

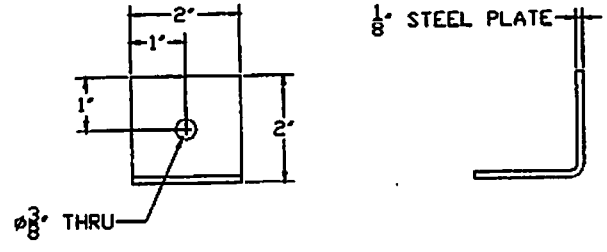

PART #008 - SIGN BRACKET

Plan View

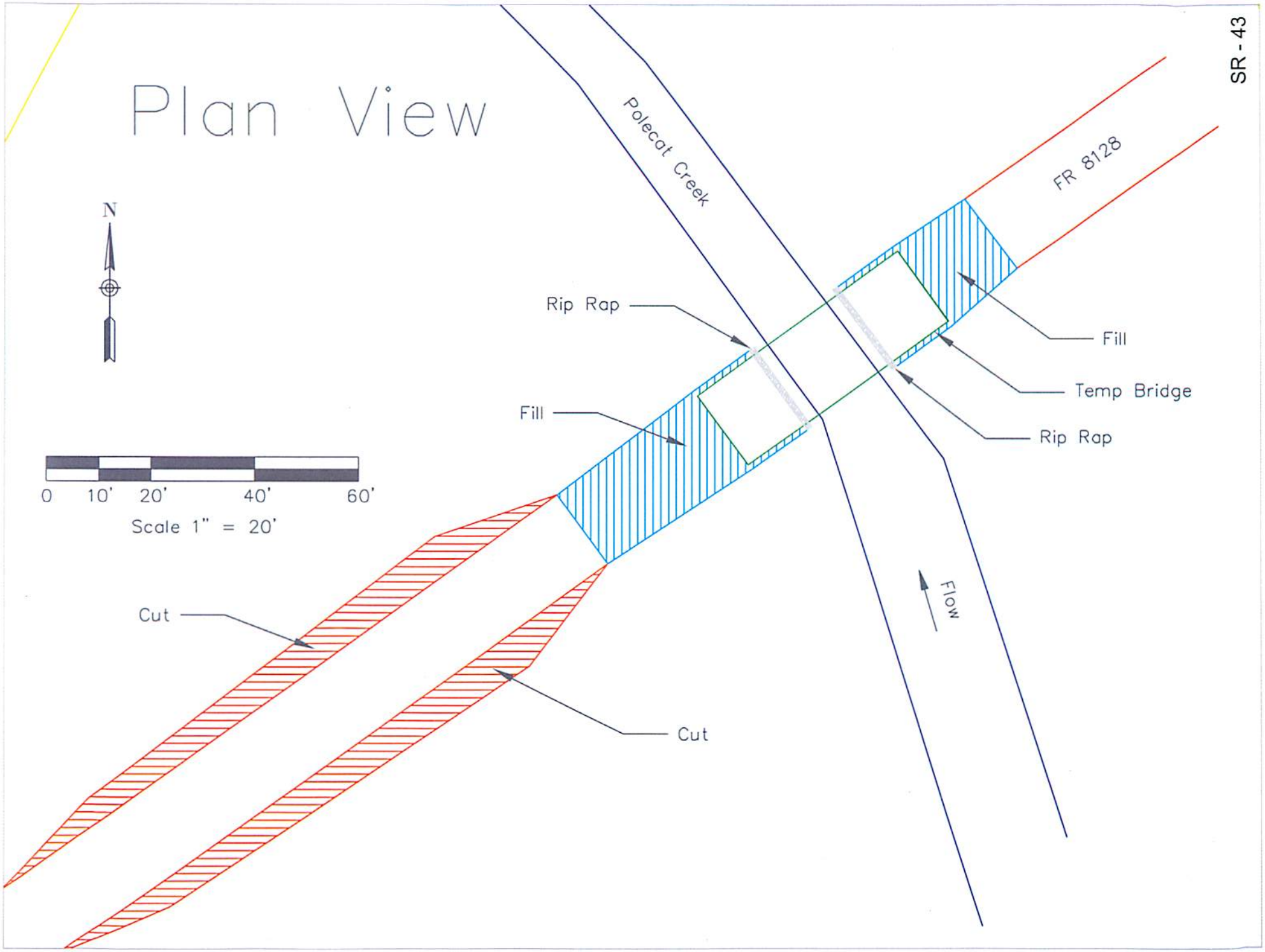
N
0 10' 20' 40' 60'
Scale 1" = 20'
Polecat Creek
FR 8128
Rip Rap
Fill
Fill
Temp Bridge
Rip Rap
Flow
Cut
Cut

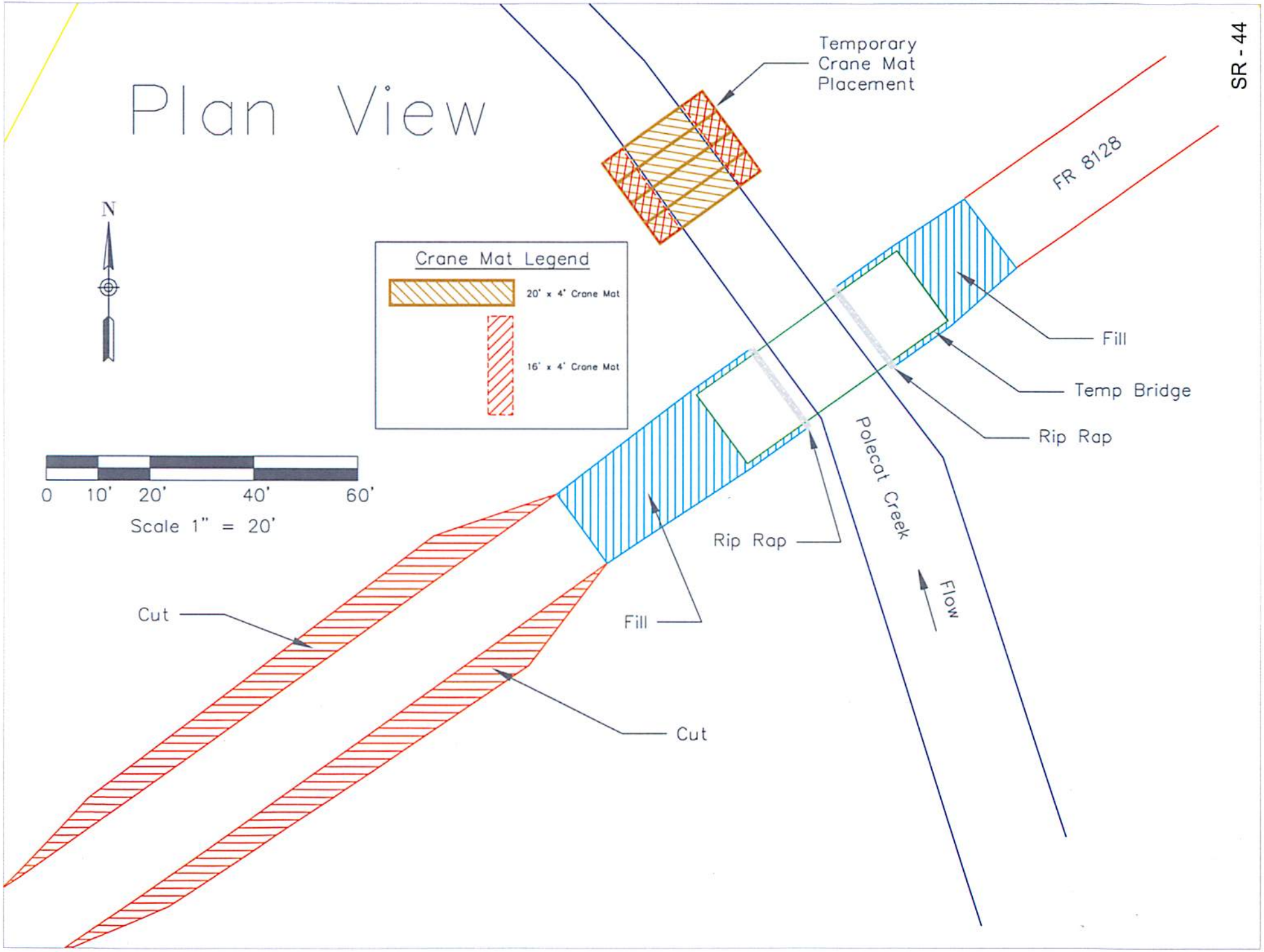
Plan View
Temporary Crane Mat Placement
FR 8128
N
Crane Mat Legend
20' x 4' Crane Mat
16' x 4' Crane Mat
0 10' 20' 40' 60'
Scale 1" = 20'
Fill
Temp Bridge
Rip Rap
Polecat Creek
Rip Rap
Flow
Fill
Cut
Cut

Cross Section

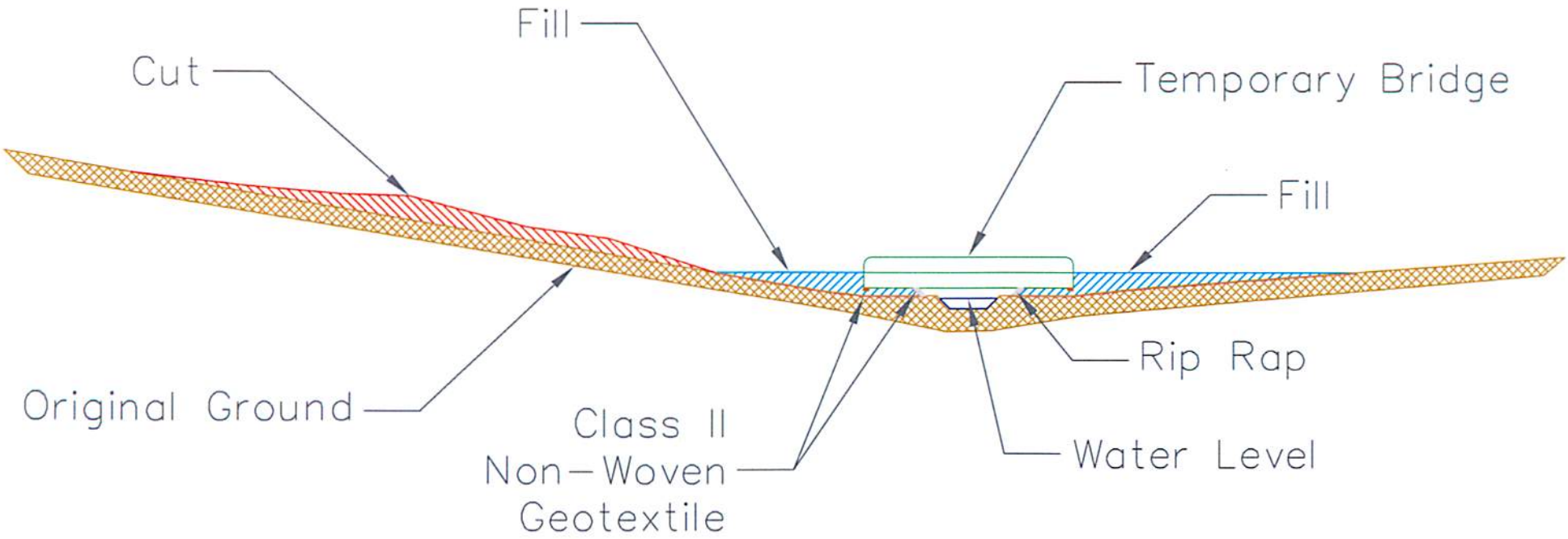

Scale 1" = 30'

Bridge Detail

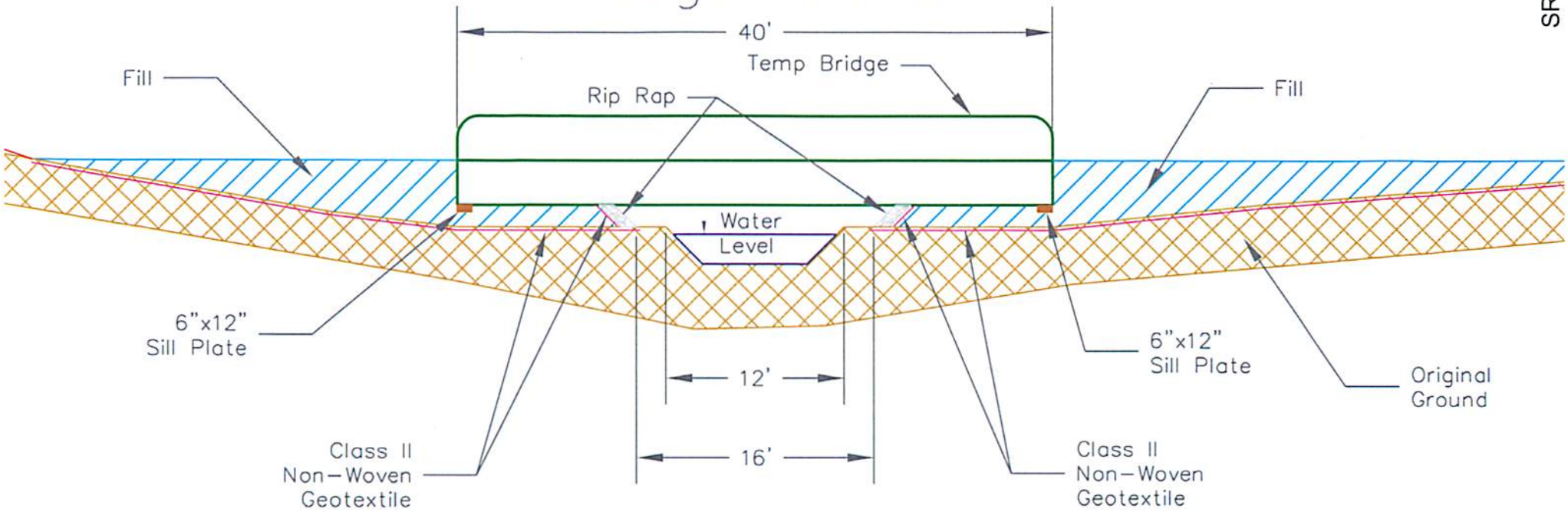

Rip Rap Detail

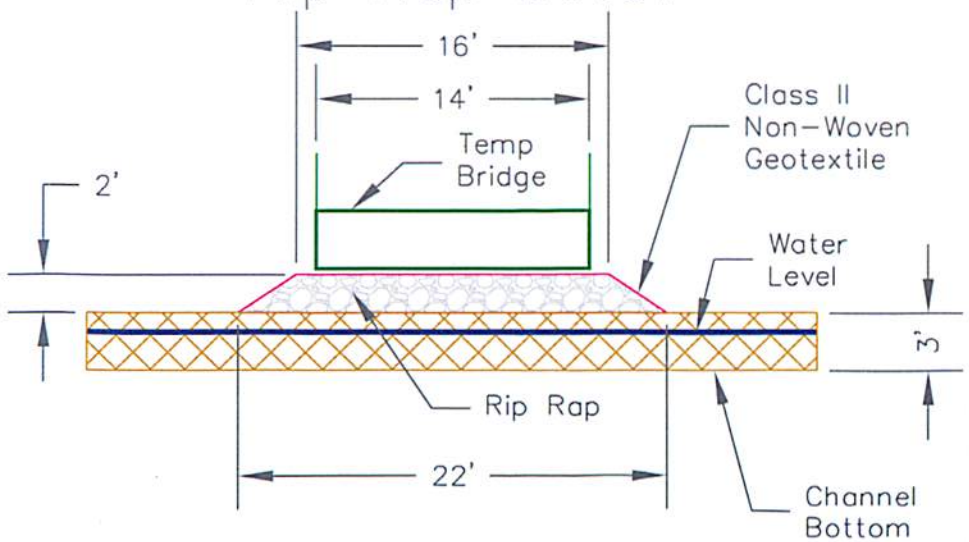

Stream Cross Section

Polecat Creek

Cross Section 80' Downstream of
Proposed Temp Bridge Location

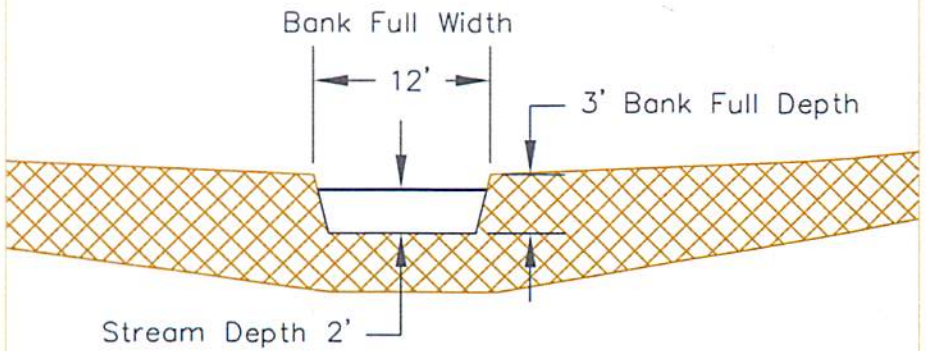

Sale Area Map
West Foxpaw Timber Sale
Bessemer RD, Ottawa NF
T45N R44W, Sections 4, 5, 7, 8 & 9
Sale Area Acres: 868 Payment Unit Acres: 305

Payment Unit	Timber Designation	Slash Treatment	Skidding/Yarding Requirement	Payment Unit	Timber Designation	Slash Treatment	Skidding/Yarding Requirement
1	DxSPP(LT)	SDZ,(1)		7	DxSPP	SDZ,(1)	
2	DxSPP	SDZ,(1)	SYR(1)	8	DxSPP	SDZ,(1)	
3	DxSPP	SDZ,(1)		9	DxSPP	SDZ,(1)	
4	DxSPP(LT)	SDZ,(1)		10	DxSPP	SDZ,(1)	
5	DxSPP	SDZ,(1)		11	DxSPP	SDZ,(1)	
6	CTM	SDZ,(1)		12	DxSPP	SDZ,(1)	SYR(2)
				13(ROW)	CTM	SDZ,(1)	

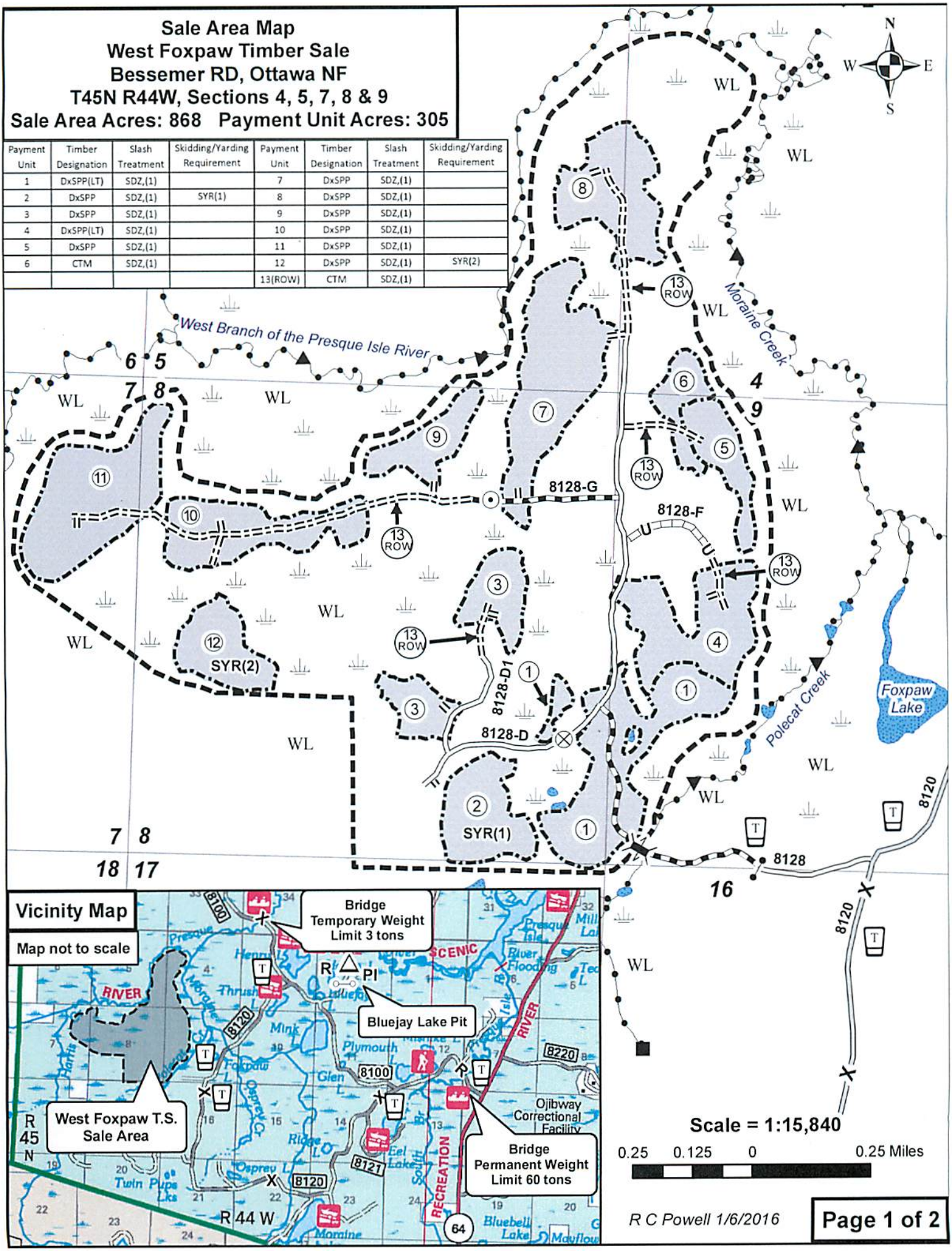

R C Powell 1/6/2016

Sale Area Map
West Foxpaw Timber Sale

Legend

	Sale Area Boundary, BT1.1
	Payment Unit Boundary, BT1.1
	Payment Unit 13 – road clearing, temporary roads; No Payment Unit Boundary, BT.1
1	Payment Unit Number, BT1.1
DxSPP	Designation by Species and Diameter, BT2.35, CT2.352#
DxSPP(LT)	Designation by Species and Diameter with Leave Trees Marked, BT2.35, CT2.352#
CTM	Cut Tree Marked Prior to Advertisement, BT2.35, CT2.355#, CT6.412
	Existing Transportation System Road, BT5.1
	Existing Road, Hauling Prohibited, BT5.12, CT5.12#
	Existing Road, Use Restricted, BT5.12, CT5.12#
	Existing Road, Unsuitable for hauling prior to agreed reconstruction, BT5.12, CT5.12#
	Specified Road Reconstruction, AT7, AT8, BT5.2, BT5.23, BT6.22, BT6.222, BT6.361, Schedule of Items
	Specified Road Construction, AT7, AT8, BT5.2, BT5.23, BT6.22, BT6.222, BT6.361, Schedule of Items
	Specified Drainage Structure, FR 8128-G (1) Culvert, Furnished by Forest Service, Purchaser Haul, Install, Remove, and Return, AT7, AT8, BT5.2, BT5.23, BT6.22, BT6.222, BT6.361, Schedule of Items
	Specified Construction, FR 8128 (1) Gate, Purchaser Furnish/Install, AT7, AT8, BT5.2, BT5.23, BT6.22, BT6.222, BT6.361, Schedule of Items
	Maintenance Drainage Structure, FR 8128-D (1) Culvert, Purchaser Furnish/Install, , CT5.31#, T-8340
	Temporary Roads, FR 8128 (1) Temporary Bridge, Furnished by Forest Service, Purchaser Haul, Install, Remove, and Return, BT5.1, BT6.63
PI	Protect Improvement (Gate – FR 8135, Blue Jay Pit Road), CT5.31#, BT6.22, T-8620
SYR(1)	Skidding and Yarding Requirements, Payment Unit 2, BT6.42, CT6.42#
SYR(2)	Skidding and Yarding Requirements, Payment Unit 12, BT6.42, CT6.42#
	Streamcourse Protection, Block Marks Upper Limit, Arrow Indicates Flow Direction, BT6.5
WL	Wetland Protection, BT6.62, CT6.62#
SDZ	Slash Disposal, BT6.7, CT6.7#
SDZ(1)	Slash Disposal, BT6.7, CT6.7#
	Lakes
T	Safety– Purchaser to Provide and Maintain Traffic Control Signs, BT6.33
	Material Source, CT5.221#, T-8130 Spot Surface Replacement/Replenishment (Blue Jay Pit, T45N-R44W, Section 2)

R C Powell 12/18/2015