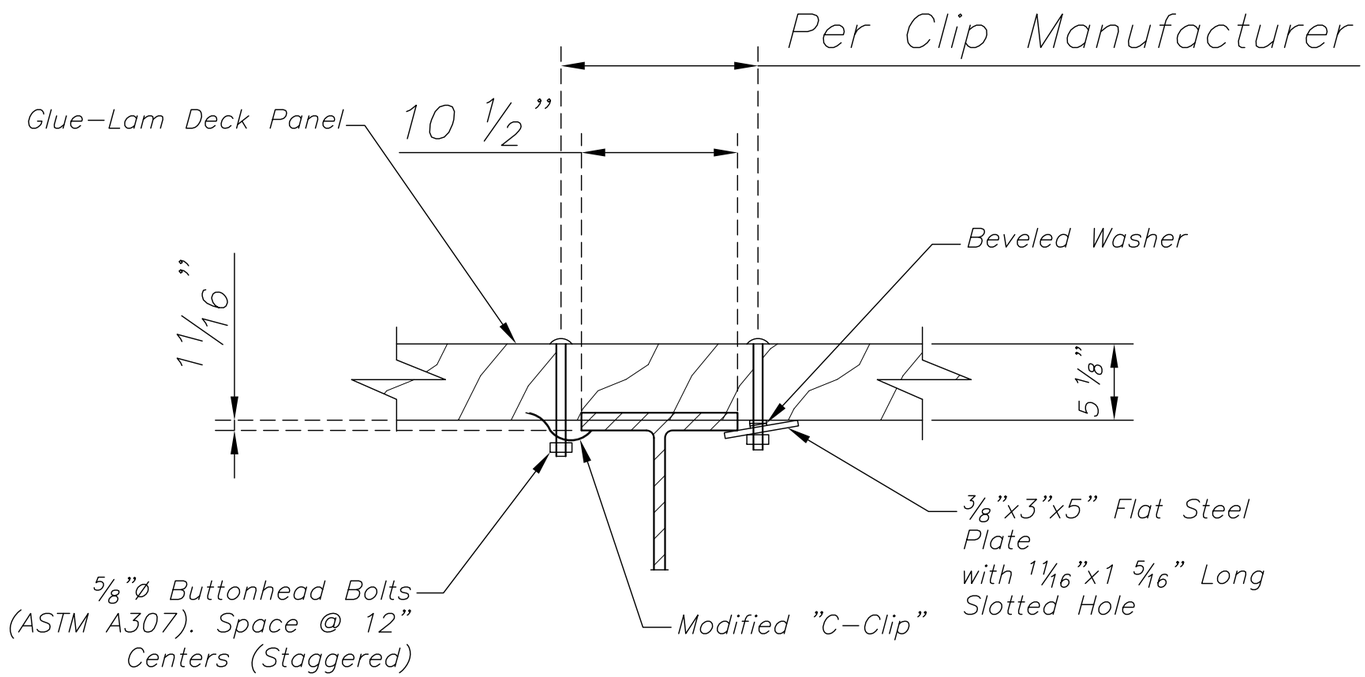

TYPICAL DECK TO BEAM CONNECTION DETAIL

Scale: 3/4" = 1'-0"

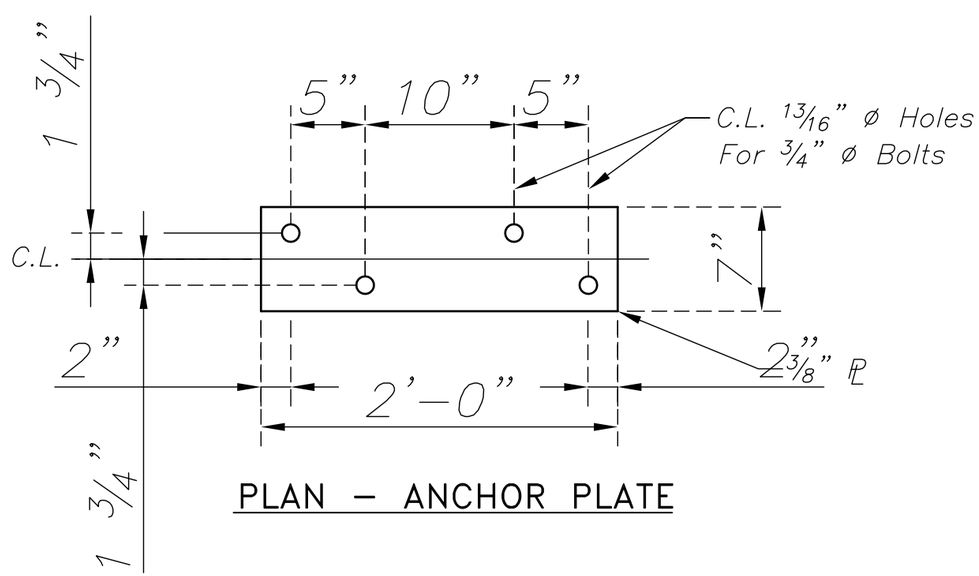

PLAN – ANCHOR PLATE

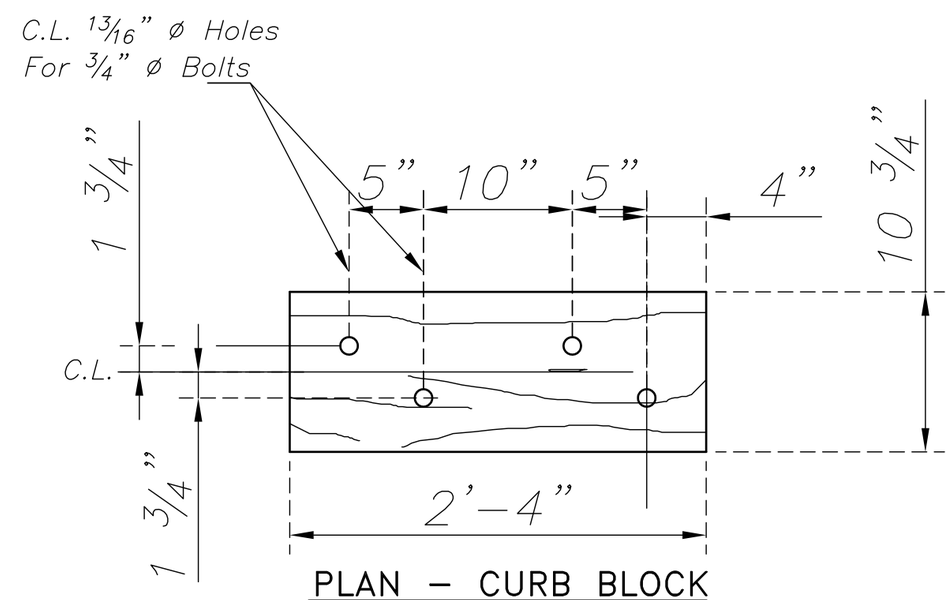

PLAN – CURB BLOCK

Fabricate From 10 3/4" x 12" or 15" as specified.
Glued-Laminated Material.