Key to Attachments

Table of Contents

Attachments Title		PAGES
A.	Specification List	1
B.	Supplemental Specifications	1-5
C.	T-Specifications	1-31
D.	Specified Road Reconstruction	As Shown

FOREST SERVICE STANDARD SPECIFICATIONS AND SUPPLEMENTALS FOR CONSTRUCTION OF ROADS AND BRIDGES SPECIFICATION LIST

All specifications not included in the specification listing, but referenced by listed specifications, are applicable. The supplements shown on the specification listed are physically attached. Section 100 through 109 of the Standard Specifications and all other Standard or Supplemental Specifications shown in the specification listing are applicable to this contract.

	Attachment A	ROAD NAME	N/A						
CONTRACT NAME	Lake Timber Sale	ROAD NUMBER	N/A						
		Miles/Sites	N/A						
DATE PREPARED	01-14-2016	CONST/RECONST	N/A						

157	SOIL EROSION CONTROL	2003							
157.03	General	02/24/05							
157.10(c)	Check Dams	2003							
157.13	Maintenance and Cleanup	2003							
703	AGGREGATE	2003							
703.05	Subbase, Base & Surface Course, and Screened Aggregate	12/07/06							
	T-SPECS								
	(See CT5.31# & Applicable T-SPECS For Details)								
	PREFACE	01/08							
T-803	SNOW REMOVAL	05/07/07							
T-811	BLADING	10/07/07							
T-812	DUST ABATEMENT	05/07/07							
T-813	SURFACING	10/07/07							
T-831	DITCH MAINTENANCE	10/07/07							
T-832	REMOVE AND END HAUL MATERIALS	05/07/07							
T-834	DRAINAGE STRUCTURE MAINTENANCE	10/07/07							
T-835	ROADWAY DRAINAGE MAINTENANCE	05/07/07							
T-836	MAINTENANCE FOR LIMITED USE	05/07/07							
T-838	MAINTENANCE FOR HIGH CLEARANCE VEHICLE USE	05/07/07							
T-839	MAINTENANCE FOR PROJECT USE	05/07/07							
T-841	VEGETATION ESTABLISHMENT	05/07/07							
T-842	CUTTING ROADWAY VEGETATION	10/07/07							
T-851	LOGGING OUT	05/07/07							
T-854	TREATMENT AND DISPOSAL OF DANGER TREES	05/07/07							
T-891	WATER SUPPLY AND WATERING	05/07/07							
T-892	BITUMINOUS PRODUCTS	05/07/07							

Attachments B – Supplemental Specifications

157 - Soil Erosion Control

157.03_nat_us_02_24_2005

157.03 General

Delete the entire subsection and replace with the following:
Prior to the start of construction, submit a written plan that provides permanent and temporary erosion control measures to minimize erosion and sedimentation during and after construction. Do not begin work until the necessary controls for that particular phase of work have been implemented. Do not modify the type, size, or location of any control. An alternate erosion control plan with all necessary permits may be submitted 30 days before intended use.
Incorporate all permanent erosion control features into the project at the earliest practicable time, as outlined in the approved plan.
When erosion control measures are not functioning as intended, immediately take corrective action.

703 - Aggregate

703.05_nat_us_12_07_2006

Delete 703.05 and replace with the following:

703.05 Subbase, Base, Surface Course, and Screened Aggregate.

(a) Subbase or base aggregate. Furnish hard, durable particles or fragments of crushed stone, crushed slag, or crushed gravel conforming the following:

(1) Gradation	Table 703-2
(2) Liquid limit, AASHTO T 89	25 max.
(3) Plastic limit, AASHTO T 90	Nonplastic
(4) Los Angeles abrasion, AASHTO T 96	40% max.
(5) Sodium sulfate soundness loss (5 cycles), AASHTO T 104	12% max.
(6) Durability index (coarse), AASHTO T 210	35 min.
(7) Durability index (fine), AASHTO T 210	35 min.
(8) Fractured faces, ASTM D 5821	50% min.
(9) Free from organic matter and lumps or balls of clay	

Do not use material that breaks up when alternately frozen and thawed or wetted and dried.

Obtain the aggregate gradation by crushing, screening, and blending processes as necessary. Fine aggregate, material passing the No. 4 sieve, shall consist of natural or crushed sand and fine mineral particles.

(b) Surface course aggregate. Furnish hard, durable particles or fragments of crushed stone, crushed slag, or crushed gravel conforming the following:

(1) Gradation	Table 703-3
(2) Liquid limit, AASHTO T 89	35 max.
(3) Plastic Index, AASHTO T 90	
a) If the percent passing the No. 200 sieve is less than 12%	2 to 9
b) If the percent passing the No. 200 sieve is greater than 12%	Less than 2
(4) Los Angeles abrasion, AASHTO T 96	40% max.
(5) Sodium sulfate soundness loss (5 cycles), AASHTO T 104	12% max.
(6) Durability index (coarse), AASHTO T 210	35 min.
(7) Durability index (fine), AASHTO T 210	35 min.
(8) Fractured faces, ASTM D 5821	75% min.
(9) Free from organic matter and lumps or balls of clay	

Do not use material that breaks up when alternately frozen and thawed or wetted and dried.

Do not furnish material that contains asbestos fibers.

Obtain the aggregate gradation by crushing, screening, and blending processes as necessary. Fine aggregate, material passing the No. 4 sieve, shall consist of natural or crushed sand and fine mineral particles.

(c) Screened aggregate – Furnish hard, durable particles or fragments of stone, slag, or gravel conforming the following:

(1) Gradtion	Table 703-16
(2) Plastic Index, AASHTO T 90	Less than 9
(3) Los Angeles abrasion, AASHTO T 96	55% max.
(4) Free from organic matter and lumps or balls of clay.	

Do not use material that breaks up when alternately frozen and thawed or wetted and dried.

Obtain the aggregate gradation by crushing, screening, and blending processes as necessary.

Delete Table 703-2 and replace with the following:

Table 703-2
Target Value Ranges for Subbase and Base Gradation

Sieve Size	Percent by Mass Passing Designated Sieve (AASHTO T 27 and T 11)				
	Grading Designation				
	A (Subbase)	B (Subbase)	C (Base)	D (Base)	E (Base)
2½ inch	100				
2 inch	97 – 100	100	100		
1½ inch		97 – 100			
1 inch	65 – 79 (6)		80 – 100 (6)	100	
3/4 inch			64 – 94 (6)	86 – 100 (6)	100
1/2 inch	45 – 59 (7)				
3/8 inch			40 – 69 (6)	51 – 82 (6)	62 – 90 (6)
No. 4	28 – 42 (6)	40 – 60 (8)	31 – 54 (6)	36 – 64 (6)	36 – 74 (6)
No. 40	9 – 17 (4)			12 – 26 (4)	12 – 26 (4)
No. 200	4.0 – 8.0 (3)	4.0 – 12.0 (4)	4.0 –7.0 (3)	4.0 – 7.0 (3)	4.0 – 7.0 (3)

( ) The value in the parentheses is the allowable deviation (±) from the target values..

Delete Table 703-3 and replace with the following:

Table 703-3
Target Value Ranges for Surface Gradation

Sieve Size	Percent by Mass Passing Designated Sieve (AASHTO T 27 and T 11)					
	Grading Designation					
	F	G	H	S	T	U
1 1/2 inch	100(			100		
1 inch	97-100	100		72 – 92 (6)	100	
3/4 inch	76-89 (6)	97 - 100	97 - 100			100
1/2 inch					71 – 91 (6)	
3/8 inch	56-68 (6)	70 – 80 (6)	80 – 92 (6)	51 – 71 (6)		71 – 90 (6)
No. 4	43-53 (7)	51 – 63 (7)	58 – 70 (7)	36 – 53 (7)	43 – 60 (7)	50 – 68 (7)
No. 8				26 – 40 (6)	30 – 46 (6)	34 – 51 (6)
No. 16	23-32 (6)	28 – 39 (6)	28 – 40 (6)			
No. 40	15-23 (5)	19 – 27 (5)	16 – 26 (5)	14 – 25 (5)	16 – 28 (5)	19 – 30 (5)
No. 200	10.0-16.0 (4)	10.0 – 16.0 (4)	9.0 – 14.0 (4)	8.0 – 15.0 (4)	8.0 – 15.0 (4)	8.0 – 15.0 (4)

( ) The value in the parentheses is the allowable deviation (±) from the target values.
If the plasticity index (PI) is greater than 0, the TV range for the No. 200 sieve size is 8-12 (4).

Add Table 703-16:

Table 703-16
Gradation Requirements for Screened Aggregate

Sieve Size	Percent by Mass Passing Designated Sieve (AASHTO T 27 and T 11)						
	Grading Designation						
	L	M	N	O	P	Q	R
6 inch	100	100					
4 inch			100	100			
3 inch					100	100	
2 inch							100
No. 4		15-45		15-45		15-45	

Attachment C – T-Specifications

FOREST SERVICE

SPECIFICATIONS FOR

MAINTENANCE OF

ROADS IN

TIMBER SALES

PACIFIC NORTHWEST REGION

EM 7730-20

01/23/2008

TIMBER SALE CONTRACT

ROAD MAINTENANCE SPECIFICATIONS

SPEC#	SUBJECT DESCRIPTION	DATE
T-803	Snow Removal	05/07/2007
T-811	Blading	10/07/2007
T-812	Dust Abatement	05/07/2007
T-813	Surfacing	10/07/2007
T-831	Ditch Maintenance	10/07/2007
T-832	Remove And End Haul Materials	05/07/2007
T-834	Drainage Structure Maintenance	10/07/2007
T-835	Roadway Drainage Maintenance	05/07/2007
T-836	Maintenance for Limited Use	05/07/2007
T-838	Maintenance for High Clearance Vehicle Use	05/07/2007
T-839	Maintenance for Project Use	05/07/2007
T-841	Vegetation Establishment	05/07/2007
T-842	Cutting Roadway Vegetation	10/07/2007
T-851	Logging Out	05/07/2007
T-854	Treatment and Disposal of Danger Trees	05/07/2007
T-891	Water Supply and Watering	05/07/2007
T-892	Bituminous Products	05/07/2007

SUPPORTING DOCUMENTS FOR MAINTENANCE SPECIFICATIONS

SUBJECT DESCRIPTION	DATE
Cover Content Preface	01/08
Cover Pages	01/08
Intent Use Guide	01/08

NO DRAWINGS ACCOMPANY THESE SPECIFICATIONS.

PREFACE
01/08

The Pacific Northwest Region of the Forest Service has developed this book for use in the preparation and administration of maintenance requirements included in Timber Sale Contracts.

Included are the Standard Specifications (Sections) that commonly apply in Timber Sale Contracts. Conditions and requirements specific to individual projects are identified in the Special Project Specifications.

Special Project Specifications, which do not change the intent of the parent section, may be approved by the Forests.

This book is available from the Supervisor's Office of any National Forest in Region 6.

Maintenance Level Requirements

Maintenance Levels - The following are abbreviated descriptions of maintenance levels.

1. **Maintenance Level II -** Conditions are suitable for high clearance vehicle travel at prudent driving speeds less than 15 mph. Road is maintained in accordance with Section T-836.

2. **Maintenance Level III -** Minimum conditions are provided for passenger car use. Surface provides moderately convenient travel at prudent driving speeds between 15 and 25 mph with corresponding surface roughness tolerated. The surface meets the following conditions.

   a. Potholes or washboard in wheel tracks normally do not exceed 2 inches in depth, and should not be of such frequency that traffic tends to widen traveled way to avoid the deformities.

   b. Surface is drained and substantially retains its cross slope or crown.

   c. Wheel ruts caused by use shall not be in excess of 3 inches in depth on horizontal curves.

3. **Maintenance Level IV -** Higher consideration than in Level III is given to comfort and convenience of the passenger car and commercial user at prudent driving speeds above 25 mph. The surface will meet the following conditions:

   a. Substantially free of chuckholes, wheel ruts, or washboard corrugations. Surface is drained and retains its cross slope or crown.

   b. Berms of loose surfacing caused by use do not generally exist, except on horizontal curves berms up to 2 inches in depth may be present.

4. **Maintenance Level V -** the highest degree of consideration is given to user comfort and convenience. Roads are commonly paved or continually dust controlled for travel at speeds of nominally 35 mph. Generally, the surface will meet the following conditions:

   a. **Level IV plus:** Surface is consolidated except for limited periods immediately preceding maintenance performance.

   b. Berms are not acceptable.

T-803 - SNOW REMOVAL (05/07)

803.01 Description

This Section provides for removal of snow from roads to facilitate logging operations and safe use.

803.02 Maintenance Requirements

(1) Erect signs required by the Sign Plan in the SUPPLEMENTAL SPECIFICATIONS.

(2) Perform work in a manner to preserve and protect roads and appurtenances, and prevent erosion damage to roads, streams, and other Forest values.

(3) Do not undercut banks. Do not blade gravel or other surfacing material off the road.

(4) Keep roadbed drainage ditches, drain dips, and culverts functional when needed during perations and upon completion of operations.

(5) Control snow removal to identify the usable traveled way having roadbed support. Reshape over-width plowing as necessary to define the usable width.

(6) Space, construct, and maintain drainage holes in the dike of snow or berm caused by snow removal operations. Place drain holes to obtain surface drainage without discharging on erodible fills.

(7) Close roads to wheeled vehicles at times and in the manner specified in C(T)5.12 or the Road Rules document.

(8) Upon seasonal completion of Purchaser's Operations, effectively block the road by a snow barricade, unless otherwise approved by the Contracting Officer.

(9) Remove snow for either public access or project use as established in the SUPPLEMENTAL SPECIFICATIONS and meet the following requirements:

(a) Removal for Public Access (Method JU) - Remove snow from all of the traveled way, including turnouts, for safe and efficient use for both timber transportation and the public. Remove intruding windfalls, debris, or slough and slide material for the full width of the traveled way and deposit out of drainage’s at locations designated by the Contracting Officer.

(b) Removal for Project Use (Method TS) - Remove snow from all or part of the traveled way, including sufficient turnouts for safe and efficient use for timber transportation and to protect the road. Remove intruding windfalls, debris or slough and slide material and dispose of only as necessary to provide passage for timber transportation. Removed materials may be deposited off the traveled way or outside the traveled way at locations designated by the Contracting Officer.

(10) When directed by the Contracting Officer, replace in kind, within sixty (60) days after the start of Normal Operating Season, any surfacing material which has been bladed off the road, unless otherwise agreed. Contracting Officer will notify Purchaser in writing as to the cubic yard equivalent of bladed off material by the start of the normal operating season.

803.03 Equipment

Purchaser may use any type of equipment to remove snow, providing:

a. Type or use of equipment is not restricted in C(T)5.12 or Road Rules document.

b. Equipment is of the size and type commonly used to remove snow and will not cause damage to the road.

c. The use of plows or dozers to remove snow requires written approval by the Contracting Officer. Equip plows or dozers with shoes or runners to keep the dozer blade a minimum of 2 inches above the road surface unless otherwise approved by the Contractor Officer.

803.04 Ice Control

Ice control may be performed by Purchaser when approved by the Contracting Officer in writing. Such approval will include ice control materials, application rates, and any specific requirements of use.

T-811 BLADING (10/07)

811.01 Description -

This work consists of surface blading the traveled way to a condition that facilitates traffic and Provides proper drainage. Blading includes shaping the crown or slope of travel traveled way, berms, and drainage dips in accordance with this specification. Compaction is required when shown on the ROAD LISTING.

811.02 Maintenance Requirements

A. Timing- Perform surface blading during the contract period as often as needed to provide conditions stated for the maintenance level of the road.

B. General -

1. Blade and shape the existing traveled way and shoulders, including turnouts , to produce a surface which is uniform, consistent to grade, and crowned or cross-sloped as indicated by the character of the existing surface, unless otherwise shown in the ROAD LISTING, to at least 13 mm (½ inch) per .305 meter (1 foot) of width, but not more than 19 mm (¾ inch) per .305 meter (1 foot) of width. Thoroughly loosen surfacing material to no less than 50 mm (2 inches) depth or the depth of potholes or corrugations. Scarification to facilitate cutting to the full depth of potholes or corrugations may be elected, but will be considered incidental to blading. Do not scarify deep enough to cause contamination of the surfacing.

2. Apply water during blading when sufficient moisture is not present to prevent segregation. Supply, haul, and apply water in accordance with Section T-891.

3. Shape existing native rock or aggregate surfaced drainage dips to divert surface runoff to existing outlet devices, ditches, or discharge locations.

4. Establish a blading pattern which provides a uniform driving surface, retains the surfacing on the roadbed, and provides a thorough mixing of the materials within the completed surface width. Upon final blading, no disturbed rock shall protrude more than 50 mm (2 inches) above the adjacent surface unless otherwise provided in the contract. Remove and place outside the roadbed material not meeting this dimension so as not to obstruct drainageways or structures. This material may be scattered off the roadbed if there is free drainage.

Where DESIGNATED ON THE GROUND, included in the ROAD LISTING, SHOWN ON THE DRAWINGS or as ordered by the Contracting Officer invasive species of concern prevention practices shall be followed as listed below.

Invasive Species of Concern Prevention Practices
Refer to Contract Provision CT6.6#

C. Routine Blading -

1. Conform to the dimensions SHOWN ON THE DRAWINGS or designated in the SUPPLEMENTAL SPECIFICATIONS upon completion of blading.

2. Shape roadbed width in excess of the dimensions shown only as needed to provide drainage away from the traveled way. Do not remove established grasses and other vegetation from the excess width except as incidental to providing drainage or unless otherwise provided in the contract.

D. Compaction -

Roads requiring compaction will be included in the ROAD LISTING. Unless Compaction Method B is designated in the ROAD LISTING, all traveled ways requiring compaction may be compacted by Method A. Compaction shall commence immediately following blading.

Compaction methods are:

Compaction Method A: By breaking track while operating equipment on the traveled way.

Compaction Method B: 7--9 metric ton (7-10 ton) pneumatic, steel, or equivalent vibratory roller, operated to cover the full width two (2) times.

E. Undercutting –

Undercutting roadway back slope is not permitted.

F. Intersections

1. At intersections, blade the roadbeds of side roads which are not closed or restricted from vehicular use to ensure smooth transitions.

2. Signing, cross ditching in the road surface (traveled way), earth berms, or other devices placed to discourage or eliminate use by passenger cars, are field evidence of road closure or restriction. Roads listed for work under Sections T-835, T-836, T-838, or T-839 are considered restricted.

3. Side roads listed for work under this Section are not restricted.

G. Cleaning of Structures - Do not allow materials resulting from work under this Section to remain on or in structures, such as bridges, culverts, cattle guards, or drainage dips.

H. Berms - Maintain existing berms to the condition of adjacent segments. Do not create new berms (windrows).

I. Smooth Blading - Smooth blading may be used as an interim measure to remove loose surfacing material from the wheel paths, and store removed materials in a recoverable windrow, until blade processing as described in this section is feasible. Watering will not be required for smooth blading. Accomplish smooth blading without distorting the existing cross-slope or crown of the traveled way.

Move and store loose surfacing materials on the high side of super-elevated curves and sections with uniform inslope or outslope. In crowned sections, store the material on either or both sides as elected. Windrow and place stored materials to provide not less than 3.6 meters (12 feet) of smooth traveled way on one-lane segments, or 6 meters (20 feet) of smooth traveledway on two-lane segments, or segments with turnouts. Cut holes through windrows, which may collect water on the road, for drainage at least every 150 meters (500 feet).

T-812 - DUST ABATEMENT (05/07)

812.01 Description

This work consists of applying dust palliatives on roads shown in the Road Listing.

812.02 Materials

The dust palliative materials are shown in the Road Listing, unless shown as Optional for Purchaser's election. If Optional is shown then the Purchaser may use any of the products listed below. Dust palliative materials shall meet the following requirements:

A. Water (H2O) will be obtained from sources SHOWN ON THE DRAWINGS or listed in the SUPPLEMENTAL SPECIFICATIONS to Section T-891 Water Supply, unless otherwise approved by the Contracting Officer.

B. Lignin Sulfonate (LIG S) Provide certification that the material meets the requirements of Subsection 725.20 of the "Standard Specifications for Construction of Roads and Bridges on Federal Highway Projects (FP-03)" and the Forest Service Supplemental Specification 725.20.

C. Magnesium Chloride (MG CL2) Provide certification that that the material meets the requirements of Subsection 725.02 of the "Standard Specifications for Construction of Roads and Bridges on Federal Highway Projects (FP03) " and the Forest Service Supplemental Specification 725.02.

D. Calcium Chloride Brine (CA CL2B). Provide certification that the material meets the requirements of Subsection 725.02 of the " Standard Specifications for Construction of Roads and Bridges on Federal Highway Projects (FP03) " and the Forest Service Supplemental Specification 725.02..

E. Calcium Chloride Flake (CA CL2F). Provide certification that that the material meets the requirements of Subsection 725.02 of the "Standard Specifications for Construction of Roads and Bridges on Federal Highway Projects (FP03) " and the Forest Service Supplemental Specification 725.02..

F. Bituminous dust palliatives. Manufacture materials specifically for dust abatement purposes which conform to the requirements of Section T-892 for each listed road in the Road Listing.

812.03 Methods

As shown in the SUPPLEMENTAL SPECIFICATIONS, Purchaser may utilize a variety of methods to decrease or eliminate the need for dust abatement.

812.04 Equipment

A. Design, equip, and operate application equipment for spreading dust palliatives so that the material is uniformly applied at the rate and traveled way widths shown in the Road Listing.

B. For bituminous palliatives provide equipment that heats and applies the bituminous material. Provide a bituminous distributor that is self-powered and mounted on pneumatic tires and equipped with a pump and circulating spray bar, a tachometer, pressure gauges, accurate volume measuring devices such as visual volume dial or gauge calibrated to the tank, and a thermometer. Provide equipment which is a standard commercial type of proven performance.

C. Accomplish dilution of dust palliatives within the application vehicle with the water source protected from contamination. Circulate the resulting mixture at least five (5) minutes to ensure uniform mixing prior to application.

812.05 Maintenance Requirements

A. Limit water applications to abatement for hauling vehicles and provide at a frequency and rate which controls dust such that vehicle tail lights and turn signals remain visible. Vary rates of application as needed but remain low enough to avoid forming rivulets. Accomplish the abatement by sufficient frequency of application without saturating and softening the traveled way. Compacted or glazed road surface or wheel tracks may be loosened as needed for water penetration.

B. Apply all other dust palliatives at the rates and times agreeable to the Contracting Officer. The Road Listing shows the expected average application rate and may be varied to meet field conditions. Lignin Sulfonate, Magnesium Chloride, and Calcium Chloride Brine are listed as liters per square meter of the undiluted product at fifty (50), thirty-three (33), and thirty-eight (38) percent respectively. Calcium Chloride Flake is listed in Kilograms per square meter at seventy-seven (77) percent concentration.

C. Apply bituminous dust palliatives only when the surface to be treated contains sufficient moisture to obtain uniform distribution of the dust palliative unless noted differently in the SUPPLEMENTAL SPECIFICATIONS.

D. Prior to initial application, when needed, the road will be bladed and shaped under Section T-811, Blading.

E. Required subsequent applications may be applied to the existing road surface without blading.

F. Dust palliatives will not be applied in a manner that spatters or mars adjacent structures or trees, or placed on or across cattleguards or bridges. Discharge dust abatement material only on roads approved by the Contracting Officer.

T-813 SURFACING (10/07)

813.01 Description

This work consists of placing surface aggregate as DESIGNATED ON THE GROUND, or as ordered by the Contracting Officer. It includes preparing the area, furnishing, hauling, and placing all necessary materials and other work necessary to blend with the adjacent road cross section.

813.02 Materials

A. Materials will be Government-furnished when stated in the supplemental specifications.

B. Materials furnished by the Purchaser shall conform to the gradation and quality requirements of Section 703 of the "Standard Specifications for Construction of Roads and Bridges on Federal Highway Projects FP-03 U.S. Customary Units" and FS supplements to the FP-03.

C. All materials transported onto National Forest System land shall be free of invasive species of concern. Written documentation of methods used to determine the invasive species of concern free status of any and all materials furnished by the Purchaser shall be submitted to the Contracting Officer before transport of any materials onto National Forest System land.

The Contracting Officer shall have 5 days, excluding weekends and Federal holidays, to review the methods and inspect the materials after the required written documentation is provided by the Purchaser. After satisfactory review and inspection or after such 5 day period, the Purchaser may transport the material onto National Forest System land.

Material or methods appropriate for establishing invasive species of concern free status for the particular invasive species of concern are listed below.

Invasive Species of Concern and Acceptable Methods specific to this project:

Invasive Species of Concern	Acceptable Methods
Centaurea biebersteinii (spotted knapweed) *Centaurea diffusa* (diffuse knapweed) *Centaurea pratensis* (meadow knapweed) *Cirsium arvense* (canada thistle) *Cirsium vulgare* (bull thistle) *Cytisus scoparius* (scotch broom) *Hypericum perforatum* (st. john's-wort) *Senecio jacobaea* (tansy ragweed)	Documentation of "weed-free" certification of material source per "*Environmental Assessment – Lake*

813.03 Maintenance Requirements

A. Thoroughly loosen the area to be surfaced to a minimum depth of 1 inch prior to placement of aggregate.

B. Mixing and Placing

When scheduled coincidentally with work under Section T-811, and included in the SUPPLEMENTAL SPECIFICATIONS, mix surfacing and existing aggregate with water until a uniform mixture is obtained prior to final shaping and compaction.

Otherwise, spread the material on the prepared area in layers no more than 4 inches in depth. When more than one (1) layer is required, shape and compact each layer before the succeeding layer is placed. Upon completion, the surfacing shall reasonably conform to the adjacent cross section and provide smooth transitions in the road profile.

C. Compaction Methods

Compaction Method A: Breaking track while operating equipment on the traveled way.

Compaction Method B: 7-10 ton pneumatic, steel, or equivalent vibratory roller, operated to cover the full width two (2) times.

Either Method A or B may be used unless Method B is designated in the ROAD LISTING.

T-831 DITCH MAINTENANCE (10/07)

831.01 Description

This Section provides for routine maintenance of various types of ditches to provide a waterway which is unobstructed, as shown on the ROAD LISTING or DESIGNATED ON THE GROUND.

831.02 Maintenance Requirements

A. Maintain ditches by removing rock, soil, wood, and other materials. Maintained ditches shall function to meet the intent of the original design.

B. Undercutting backslopes during removal operations is not permitted.

C. Suitable material up to 4 inches in greatest dimension removed from the ditches may be blended into existing native road surface and shoulder or placed in designated berm.

D. Do not blend material from ditch cleaning operations into aggregate surfaced roads. Do not blade material across aggregate or bituminous surfaced roads, unless approved in writing by the Contracting Officer.

E. Haul material in excess of 831.02 D or subject to 831.02 E to a designated waste area under Section T-832. Remove excess materials temporarily stored on the ditch slope or edge of the shoulder daily.

F. Remove limbs and wood chunks in excess of 12 inches in length or 3 inches in diameter from ditches and place outside the roadway.

G. Clean paved surfaces of all materials resulting from ditch maintenance work.

H. Shape lead-off ditches to drain away from the traveled way.

I. Where DESIGNATED ON THE GROUND, included in the ROAD LISTING, SHOWN ON THE DRAWINGS or as ordered by the Contracting Officer invasive species of concern prevention practices shall be followed as listed below.

Invasive Species of Concern Prevention Practices
Refer to Contract Provision CT6.6#

T-832 REMOVE AND END HAUL MATERIALS (05/07)

832.01 Description

Work consists of loading, hauling, and placing of slide, slough, or excess materials such as rock, soil, vegetation, and other materials to designated disposal sites.

832.02 Maintenance Requirements

A. Remove, end haul, and dispose of excess materials generated by work under other Sections of this contract.

B. Remove the slide and slough materials in the area extending approximately 6 feet vertically above the road surface and not more than 3 feet down slope from the roadbed. Dispose of material at designated sites as SHOWN ON THE DRAWINGS, identified in SUPPLEMENTAL SPECIFICATIONS, or as ordered by the Contracting Officer.

Reshape the slope which generated the slide material as nearly as practical to its original condition by equipment operating from road surface. Reshaping of roadside ditches in slide area shall be in accordance with Section T-831.

C. When approved by the Contracting Officer, fill slumps by compacting selected materials into roadway depressions. Compaction is by Method 2.

D. Place all materials in disposal sites as specified in the SUPPLEMENTAL SPECIFICATIONS, as SHOWN ON THE DRAWINGS, or as ordered by the Contracting Officer.

1. Method 1 - Side Casting and End Dumping. Material may be placed by side casting and end dumping. Where materials include large rocks, provide a solid fill by working smaller pieces and fines into voids. Shape the finished surfaces to drain.

2. Method 2 Layer Placement - Step or roughen surfaces on which materials are to be placed prior to placing any material. Place materials in approximately horizontal layers no more than 12 inches thick. Compact each layer by operating hauling and spreading equipment over the full width of each layer.

E. Repair any damage to existing aggregate or pavement surfaces.

T-834 DRAINAGE STRUCTURE MAINTENANCE (10/07)

834.01 Description

This work consists of cleaning and reconditioning culverts and other drainage structures.

834.02 Maintenance Requirements

A. Clean drainage structures, inlet structures, culverts, catch basins, and outlet channels specified in the SUPPLEMENTAL SPECIFICATIONS. Clean catch basins by removing the material within the area SHOWN ON THE DRAWINGS.

B. Clean the transition from the ditch line to the catch basin a distance of 10 feet from the catch basin. Clean outlet channels and lead-off ditches a distance of 6 feet. Remove and place debris and vegetation so as to not enter the channel or ditch, or obstruct traffic. Haul debris and vegetation to a designated disposal area in accordance with Section T-832.

C. Hydraulic flushing of drainage structures is not allowed unless provided for in the SUPPLEMENTAL SPECIFICATIONS.

D. Cleaning and reconditioning are limited to the first 3 feet of inlet and outlet, determined along the top of the structure. Recondition culvert inlet and outlet by field methods such as jacking out or cutting away damaged metal which obstructs flow. Treat cut edges with a zinc rich coating, in accordance with AASHTO M 36M and ASTM A 849.

E. Where DESIGNATED ON THE GROUND, included in the ROAD LISTING, SHOWN ON THE DRAWINGS or as ordered by the Contracting Officer invasive species of concern prevention practices shall be followed as listed below.

Invasive Species of Concern Prevention Practices
Refer to Contract Provision CT6.6#

T-835 ROADWAY DRAINAGE MAINTENANCE (05/07)

835.01 Description

This work consists of providing post haul drainage on roads.

835.02 Maintenance Requirements

A. Drainage

1. Upon completion of work, shape the roadway to provide for the removal of surface water. The roadway need not be passable to vehicles. Repair and reinstall water bars, barriers or berms existing prior to the Purchaser's operation. Areas where water is ponded by existing centerline profile sags in through cuts may be left untreated.

2. Continuous blade shaping of the roadbed is not required under this specification.

3. Work to be done at staked locations shall be as indicated on the stake and/or stated in SUPPLEMENTAL SPECIFICATIONS:

4. Any of the following methods are acceptable for use at eroded or rutted locations:

Method A: Outsloping the roadbed at not less than ½ inch per yard of width.

Method B: Insloping the roadbed at not less than ½ inch per yard of width.

Method C: Water bar roadbed at locations staked on the ground and construct as SHOWN ON THE DRAWINGS or as included in SUPPLEMENTAL SPECIFICATIONS.

5. Drainage structures located in through fills and natural watercourses shall be fully functional without obstructions, including inlet and outlet channel within 20 feet of the structure.

6. Either clean culverts and other fabricated structures to provide drainage from road ditches and make the ditch functional or provide water bar(s) across the roadbed. Removed structures shall become Purchaser's property to be removed from National Forest System land. Remove and replace any purchaser-installed temporary drainage structures with a water bar.

B. Slides, Slumps and Slough

1. Slides and slough may be left in place, provided they do not potentially impound water or divert water from watercourses. As necessary, reshape the various surfaces to provide drainage.

2. Provide drainage to effectively decrease or eliminate the entry of surface water into slides, slumps, and roadbed surface cracks. Place berms, waterbars or ditches as needed to intercept and remove runoff water from the roadbed. Surface seal cracks by covering over with native soil materials to prevent additional water entry and compact with equipment tires.

C. Entrance Devices

Upon completion of work, replace entrance devices to effectively eliminate access by motorized vehicles having four (4) wheels and a width in excess of 50 inches.

D. Seeding

Seed and fertilize all disturbed areas in accordance with requirements set forth in Section T-841.

T-836 - MAINTENANCE FOR LIMITED USE (05/07)

836.01 Description

This work consists of making limited use roads passable for joint use by Purchaser and high clearance vehicles, and providing drainage from the traveled way and roadbed.

836.02 Maintenance Requirements

A. Traveled Way

Purchaser may smooth or fill existing cross ditches and water bars and by agreement modify existing road junctions to enable vehicle access. Prior to beginning haul and resumption of haul after an extended stoppage:

1. Remove brush, fallen trees, rocks, and other debris from traveled way, including turnouts, turnarounds, and other locations that interfere with needed maintenance as follows:

a. No object extending over 4 inches above the road surface shall remain within the 12 feet usable traveled way and 10 feet turnout widths. Center the usable width on the roadbed or position away from the fill slope.

b. Cut and remove standing or down trees, logs, brush, and limbs from within the area described in 1 a. above. Remove encroaching limbs to a height of 14 feet above the traveled way surface. Scatter material not meeting utilization standards outside and below the roadbed on the fill side. Limb and remove timber which meets utilization standards or deck at agreed locations.

c. Place all removed materials away from drainages.

d. During use, maintain drainage structures, including dips, ditches and culverts in a useable condition.

2. Clean and recondition drainage facilities in accordance with: Section T-831 and T-834.

B. Slough and Slides

1. Slough and slides may be left in place, provided surface drainage is provided and at least 12 feet of width is available for vehicle passage.

2. Purchaser may reposition or ramp over slides and slough when the traveled way width is less than 12 feet providing the material is capable of supporting vehicles. Limit out slope to no more than six percent.

3. Reposition slough or slide materials on the roadbed which are not capable of supporting a vehicle to provide the 12 foot width. When directed by the Contracting Officer, slough or slide material will be removed under Section T-832.

C. Slumps and Washouts

1. Drain the roadbed immediately upgrade of slumps and longitudinal cracks to prevent water from entering slump area.

2. Slumps and longitudinal cracks at the edge of the roadbed shall not be considered a part of the usable width. Usable width may be reduced to 10 feet in the area of the slump.

3. Unless the Contractor Officer agrees to material being placed on slumps, ramp the slumps on both ends into undisturbed roadbed to provide at least 10 feet usable width. Use removed materials to guide vehicles to the ramp location or to aid in draining the area.

4. Washouts may be filled with suitable material.

D. Post haul

At the end of hauling or prior to entering into seasonal shutdowns or a period of extended inactivity:

1. Shape the traveled way and disturbed roadbed to provide functional drainage.

2. Reinstall removed cross ditches and water bars and provide any additional drainage structures necessary to offset changes caused through use and maintenance.

3. Leave roads useable for high clearance vehicles. Remove or reshape purchaser modifications at road junctions to leave the entrance as it was before use, or as agreed at the time of improvement.

T-838 MAINTENANCE FOR HIGH CLEARANCE VEHICLE USE (05/07)

838.01 Description

This work consists of making limited use roads passable for project use by Purchaser and providing drainage from the traveled way and roadbed.

838.02 Maintenance Requirements

A. Traveled Way

Purchaser may smooth or fill existing cross ditches and water bars and as approved by the Contracting Officer modify existing road junctions to enable vehicle access. The Purchaser may perform the following work prior to beginning haul and resumption of haul after an extended stoppage:

1. Remove brush, fallen trees, rocks, and other debris from traveled way, including turnouts, turnarounds, and other locations that interfere with needed maintenance as follows:

a. No object extending over 4 inches above the road surface shall remain within the 12 feet usable traveled way. Center the usable width on the roadbed or position away from the fill slope.

b. Cut and remove standing or down trees, logs, brush, and limbs from within the area described in 1(a). Remove encroaching limbs to a height of 14 feet above the traveled way surface. Scatter material not meeting utilization standards outside and below the roadbed on the fill side. Limb and remove timber that meets utilization standards or deck at locations approved by the Contracting Officer.

c. Place all removed materials away from drainages.

d. During use, maintain drainage structures including dips, ditches and culverts in a usable condition.

2. Clean and recondition drainage facilities in accordance with Section T-831 and T-834.

B. Slough and Slides

1. Slough and slides may be left in place, provided surface drainage is provided and at least 12 feet of width is available for vehicle passage.

2. Purchaser may reposition or ramp over slides and slough when the traveled way width is less than 12 feet providing the material is capable of supporting vehicles. Limit out slope to no more than six percent.

3. Reposition slough or slide materials, which are not capable of supporting a vehicle, on the roadbed to provide the 12 feet width. When directed by the Contracting Officer, slough or slide material will be removed under Section T-832.

C. Slumps and Washouts

1. Drain the roadbed immediately upgrade of slumps and longitudinal cracks to prevent water from entering slump area.

2. Slumps and longitudinal cracks at the edge of the roadbed shall not be considered a part of the usable width. Usable width may be reduced to 10 feet in the area of the slump.

3. Unless the Contracting Officer approves material being placed on slumps, ramp the slumps on both ends into undisturbed roadbed to provide at least 10 feet usable width. Use removed materials to guide vehicles to the ramp location or to aid in draining the area.

4. Washouts may be filled with suitable material.

D. Post haul

At the end of hauling or prior to entering into seasonal shutdowns or a period of extended inactivity:

1. Shape the traveled way and disturbed roadbed to provide functional drainage.

2. Reinstall removed cross ditches and water bars and provide any additional drainage structures necessary to offset changes caused through use and maintenance.

3. Leave roads useable for high clearance vehicles. Remove or reshape purchaser modifications at road junctions to leave the entrance as it was before use, or as agreed at the time of improvement.

T-839 MAINTENANCE FOR PROJECT USE (05/07)

839.01 Description

Work consists of providing minimum access required for Purchaser's Operations and associated Forest Service contract administration and preventing unacceptable resource or road damage.

839.02 Maintenance Requirements

A. Purchaser is authorized to perform the following maintenance to provide vehicle passage and drainage:

1. Removing log, earth, and rock barriers and/or improving existing road junctions to enable vehicle access as mutually agreed.

2. Smoothing or filling existing cross ditches and water bars.

3. Installing Purchaser-furnished culverts or other temporary drainage structures for shallow stream crossings as approved by the Contracting Officer.

4. Removing brush, fallen trees, rocks, and other materials from the traveled way and other locations that interfere with needed maintenance:

a. Place all removed materials away from drainages.

b. Limb and remove timber which meets utilization standards or deck at locations approved by the Contracting Officer. Scatter other woody materials, including limbs, off of and below the roadbed without creating concentrations.

5. Clean and recondition drainage structures in accordance with Section T-831 and Section T-834.

6. Reposition or ramp over slough and slides to provide adequate width of traveled way material.

7. Provide traveled way drainage above slumps and seal cracks in slump area. Ramp the slumps on both ends into undisturbed roadbed to provide usable width unless otherwise ordered by the Contracting Officer.

B. During use, the traveled way shall not channel water along the road. Prior to seasonal periods of anticipated rains and runoff, perform the following work:

1. Shape the traveled way and roadbed to drain.

2. Reinstall removed cross ditches and water bars and provide any additional drainage structures necessary to offset changes through use and maintenance.

3. Perform work outlined in 839.02 A (5), (6), and (7).

4. During periods of non use, replace original barrier or provide and maintain standard MUTCD, Type 3, barricades unless alternate type barriers are approved by the Contracting Officer.

839.03 Post Haul Requirements

A. Upon completion of project use perform such work as needed to reasonably conform to the character of the existing road prior to Purchaser's maintenance for project use, unless otherwise provided in the SUPPLEMENTAL SPECIFICATIONS or the Road Listing. Work shall be in addition to requirements of 839.02 B and in accordance with 839.03 B and C.

B. Roads designated in the Road Listing to be blocked shall conform to the requirements of Section T-835. Unless otherwise approved by the Contracting Officer, remove Purchaser-installed temporary structures from National Forest System land. Associated commercially-obtained materials shall remain the property of the Purchaser.

C. Remove or reshape Purchaser improvements at road junctions, as approved by the Contracting Officer at the time of improvement.

T-841 VEGETATION ESTABLISHMENT (5/07)

841.01 Description

This work consists of applying seed, fertilizer, mulch, and planting containerized or bare root plant stock singularly or in specified combinations to roadways and disposal areas. Work area may be limited to designated portions of the roadway and roadside or include treatment of the entire area bounded by the outer limits of the roadsides.

841.02 Materials and Application Rates

Provide the following listed materials:

A. Fertilizer: Fertilizer shall be a standard commercial grade and provide the minimum percentage of available nutrients designated.

% Nitrogen	% Phosphorus	% Potassium	% Sulfur
Refer to Contract Provision CT6.6#			

Furnish fertilizer in sealed containers with the composition, weight, and guaranteed analysis of contents clearly marked. Apply at the rate of **300** pounds per acre.

B. Seed:

1. This work consists of furnishing and placing required seed mix on all areas disturbed under this contract and on any other areas specified.

2. Apply the seed in the following amounts and mixtures:

Species	Application Rate
Refer to Contract Provision CT6.6#	**Refer to Contract Provision CT6.6#**

3. Use hand-operated seeding devices, or other devices approved by the Contracting Officer, to apply seed.

4. Furnish weed-free seed, with additional requirement that no seed containing any prohibited noxious weed seed, or any restricted noxious weed seed in excess of current state standards, for those weeds as defined in the current publication commonly referred to as the "All States Noxious Weed List" while the standards for prohibited and restricted noxious weeds are to be found in the appropriate state law or regulations.

Furnish seed separately or in mixture in standard containers with (1) seed name; (2) lot number; (3) net weight; (4) percentages of purity and of germination (in case of legumes, percentage of germination to include hard seed), and (5) percentage of maximum weed seed content clearly marked for each kind of seed; (6) certification that the seed lot meets applicable State and Federal laws with regard to prohibited and restricted noxious weeds clearly marked for each kind of seed. Furnish the Contracting Officer duplicate signed copies of a certificate signed by a Registered Seed Technologist or Seed Analyst (certified through either the Association of Official Seed Analysts or the Society of Commercial Seed Technologists) certifying that each lot of seed has been tested in accordance with the Association of Official Seed Analysts standards within 12 months prior to the date of application. This certification shall include (1) name and address of laboratory, (2) date of test, (3) lot number for each kind of seed, (4) name of seed, (5) percentage of germination, (6) percentage of purity, (7) percentage of weed content, (8) certification that the seed lot meets applicable State and Federal laws with regard to prohibited and restricted noxious weeds, and (9) in the case of a mixture, the proportions of each kind of seed. Legume seed shall be inoculated with approved cultures in accordance with the instructions of the manufacturer. No seed may be applied without prior written approval from the Contracting Officer.

C. Mulch: Apply mulch materials as follows:

Mulch Type	**Application Rate**
Refer to Contract Provision CT6.6#	**Refer to Contract Provision CT6.6#**

D. Plant Stock: Furnish the following listed plant materials:

Stock	Size	Bare Root	Containerized
N/A			

841.03 Schedules and Applications

A. Schedule

1. Seeding may not be done until all other ground-disturbing work on the road has been completed and accepted. Complete seeding as soon as other ground-disturbing work is accepted, unless a specific seeding season is listed below.
Seeding season: April 15 to September 15.

2. Do not apply the treatment when the ground is frozen or excessively wet. Terminate application during periods when there is too much wind to allow consistent treatment rates and control of the treatment area to the designated limits.

B. Roadside and Slope Treatment

1. Roadsides will not require advance preparation unless required in the SUPPLEMENTAL SPECIFICATIONS or as SHOWN ON THE DRAWINGS.

2. Apply the designated treatment by hand operated machine. When both roadbed (under 841.03C) and slopes are shown in the SUPPLEMENTAL SPECIFICATIONS for treatment, application may be done at the same time.

3. The Contractor will not be required to operate self-propelled equipment beyond the defined roadbed. Do not apply treatment materials to the foreslope of ditches unless roadbed treatment (841.03C) is also required.

C. Roadbed Treatment

1. Scarify portions of the roadbed not previously disturbed and left loose under Section T-835 to a minimum depth of 4 inches unless bedrock is encountered at a lesser depth. The maximum distance between furrows formed by scarification is 12 inches.

2. Treat barrier mounds placed under Section T-835 while in a roughened condition.

D. Planting

1. Plant designated woody plant materials at the staked locations or designated spacings.

2. Place containerized plant stock in an appropriately sized hole formed by a dibble or other device to place the roots at the proper depth.

3. Place bare root plant stock in a slotted cut formed by a mattocks, pulaski, or other edged tool. Place the crown at ground level. Do not bend or break the roots.

4. Compress the area adjacent to the hole by foot or special tool to form a depression up and down slope from the stem and force the soil against the container or roots with no air voids.

5. Hold the plantings firmly in place by the soil. When checked by pulling upward on the top ½ inch of the plant stem, the planting shall either break at the hold point or the area compressed against the roots show evidence of movement. Remove and replace with fresh stock plantings that are not held firmly by the soil.

841.04 Government Provided Materials

The Government will provide the following listed materials. At least ten (10) calendar days notice must be given to the Contracting Officer prior to actual date material will be picked up.

Materials will be provided at: **Refer to Contract Provision CT6.6#**

T-842 CUTTING ROADWAY VEGETATION (10/07)

842.01 Description

This work consists of cutting all vegetative growth, including trees and other vegetation less than 4 inches in diameter measured 6 inches above the ground, on roadway surfaces and roadsides.

842.02 Maintenance Requirements

A. General

1. Cut brush, trees, and other vegetation within each area treated to a maximum height of 6 inches above the ground surface or obstruction such as rocks or existing stumps. When work is performed under this Section, remove all limbs which extend into the treated area, or over the roadbed, to a height of 14 feet above the traveled way surface elevation.

2. Items to remain will be DESIGNATED ON THE GROUND.

3. Work may be performed either by hand or mechanically unless specifically shown in the Road Listing. Self-propelled equipment is not allowed on cut and fill slopes or in ditches.

4. Correct damage to trunks of standing trees caused by Purchaser's operation either by treatment with a commercial nursery sealer or by removing the tree as directed by the Contracting Officer.

5. Limb trees within the cutting limits which are over 4 inches -measured at 6 inches above the ground in lieu of cutting.

6. When trees are limbed, cut limbs within 4 inches of the trunk.

B. Cutting Side Vegetation

1. Show the width of vegetation to be removed in the Road Listing.

2. Unless otherwise included in the SUPPLEMENTAL SPECIFICATIONS or DESIGNATED ON THE GROUND:

a. Commence work at the edge of the traveled way and proceed away from the road centerline.

b. Roads without a defined traveled way: The starting point for cutting will be marked on the ground or defined in the SUPPLEMENTAL SPECIFICATIONS.

3. The points for establishing cutting limits are as follows:

a. Fill and daylighted (wide roadbed) section cutting commences at the edge of the traveled way and proceeds away from the road center line.

b. Drainage ditched section cutting commences at the bottom of the existing ditch and proceeds away from the road center line. Cutting on ditch foreslopes is not required.

c. Unditched cut section cutting commences at the intersection of the cutbank and the roadbed and proceeds away from center line.

4. Provide transitions between differing increments of cutting width. Accomplish transitions in a taper length of not less than 50 feet nor more than 70 feet.

C. Debris

1. Materials resulting from the cutting operation in excess of 12 inches in length or 3 inches in diameter is not allowed to remain on roadway slopes within the treated area, in ditches, or within water courses.

2. Remove limbs and chunks in excess of 3 inches in any dimension from the traveled way and shoulders.

3. Materials may be scattered down slope from the roadbed, outside of the work area and drainages unless otherwise listed in D. Invasive Species of Concern.

D. Invasive Species of Concern

Where DESIGNATED ON THE GROUND, included in the ROAD LISTING, SHOWN ON THE DRAWINGS or as ordered by the Contracting Officer invasive species of concern prevention practices shall be followed as listed below.

Invasive Species of Concern Prevention Practices
Refer to Contract Provision CT6.6#

T-851 LOGGING OUT (5/07)

851.01 Description

This work consists of removal of fallen trees and snags which encroach into the roadway or the 3 feet of roadside abutting the roadway on the cut side.

851.02 Maintenance Requirements

A. Limb and remove timber which meets Utilization Standards, or deck at locations designated by the Contracting Officer.

B. Limb other material cut into lengths for handling. Deck outside ditches and drainages, off the traveled way and turnouts or at staked locations. The clearing width is to the edge of the roadway for public use roads, except limited use roads. The clearing width for limited use roads is shown in the specifications.

C. Notwithstanding B(T)2.3, blowdown timber outside Sale Area required to be removed, which meets Utilization Standards in A(T)2, when designated by the Contracting Officer is Included Timber subject to requirements of B(T)2.2.

D. Do not leave woody debris and slash in excess of 12 inches in length or 3 inches in diameter, or concentrations which may plug ditches or culverts, in ditches, drainage channels, or on backslopes, traveled way, shoulders, or turnouts.

T-854 – TREATMENT AND DISPOSAL OF DANGER TREES (5/07)

854.01 Description

This work consists of felling and disposal of designated live or dead danger trees sufficiently tall to reach roads used by the Purchaser. Any removal of logs is subject to prior agreement between the Contractor Officer and the Purchaser.

854.02 Requirements

A. Designation of danger trees.

Danger trees to be felled will be designated in advance by the Contracting Officer. Trees to be removed will be Marked.

B. Falling, bucking and treatment for disposal.

Use controlled felling to ensure the direction of fall and prevent damage to property, structures, roadway, residual trees, and traffic. Stump heights, measured on the side adjacent to the highest ground, must not exceed 12 inches or 1/3 of the stump diameter, whichever is greater. Higher stump heights are permitted when necessary for safety.

Felled snags and trees, which are not Marked for removal, will be left in a stable condition such that they will not roll or slide. Position logs away from standing trees so they will not roll, are not on top of one another, and are located out of roadway and drainage structures.

Fell, limb and, remove trees, which are Marked for removal, that equal or exceed the utilization standards as listed in the Timber Sale contract or SUPPLEMENTAT SPECIFICATIONS. Dispose of merchantable timber designated for removal in accordance with B/BT2.32 Construction Clearing, of the Timber Sale Contract, or as described in SUPPLEMENTAL SPECIFICATIONS.

C. Slash treatment.

Within the roadway, remove limbs, chunks, and debris in excess of 12 inches in length and 3 inches in diameter, and concentrations that may plug ditches or culverts, and water courses.

Dispose of slash by scattering outside the roadway limits without damaging trees, or improvements.

Large accumulations of slash may be ordered hauled under T-832.

T-891 WATER SUPPLY AND WATERING (5/07)

891.01 Description

This work consists of providing facilities to furnish an adequate water supply, hauling and applying water.

891.02 Materials

If the Purchaser elects to provide water from other than designated sources, the Purchaser is responsible to obtain the right to use the water, including any cost for royalties involved. Suitable and adequate water sources available for Purchaser's use under this contract are designated as follows:

Map Key No.	Location Road	Location Milepost	Use Restrictions
N/A	Ripplebook Pond Harriet Lake, 4630 Timber Lake		Use of screen material with either of the following maximum openings is required: 1.75 mm opening for woven wire or 3/32 inch opening for perforated plate.

891.03 Equipment

A. Positive control of water application is required. Equipment shall provide uniform application of water without ponding or washing.

B. An air gap or positive anti-siphon device shall be provided between the water source and the vehicle being loaded if the vehicle has been used for other than water haul, if the source is a domestic potable water supply, or the water is used for tank mixing with any other materials.

C. The designated water sources may require some work prior to their use. Such work may include cleaning ponded areas, installing temporary weirs or sandbags, pipe repair, pump installation, or other items appropriate to the Purchaser's operations. Flowing streams may be temporarily sandbagged or a weir placed to pond water, provided a minimum flow of _____ cu. ft/sec is maintained. Obtain approval from the Contracting Officer on improvements for sandbags or weirs prior to placement.

T-892 BITUMINOUS PRODUCTS (5/07)

892.01 Cutback Asphalt's and Emulsified Asphalt's

Meet the requirements and application temperatures of Section 702 of the "Standard Specifications for Construction of Roads and Bridges on Federal Highway Projects (FP-03)".

892.02 Bituminous Dust Palliatives

Meet the bituminous dust palliatives requirements listed in Table T-892-1 or listed in the SUPPLEMENTAL SPECIFICATIONS.

892.03 Certificate of Compliance

Provide a Certificate of Compliance in the following format;

Consignee **N/A** Designation_____
Contract Number_____ Date_____
Identification (Truck No. Car No., Etc.)_____
Type and Grade_____ With Additive (%, Brand)_____
Loading Temperature_____ Net Weight_____
Net Liters_____

The shipment of bituminous material identified above and covered by the bill of lading complies with Government Standard Specification as modified by SUPPLEMENTAL SPECIFICATIONS applicable to this project.

Producer _____
Signed _____
(Producer's Representative)

892.04 Application Temperatures

Apply bituminous materials within the temperature ranges indicated in Table T-892-2.

TABLE T-892-2 - Application Temperatures

Application Temperature Range (Degrees C)

Type & Grade of Material	Min./Max.	Spray Min./Max.	Mix
MC 30		21-63	16-40
MC 70		40-85	32-68
DO-1-2-3		27-52	
DO-4		27-80	
DO-6-7-8		10-60	

TABLE 892-1.- Bituminous dust palliatives.

General Requirements	ASTM Method	DO-1	DO-2	DO-3	DO-4	DO-6	DO-6P	DO-8
Flash Point								
Tag Open-Cup, °C, Min	D 1310	52	52	52	93	66	66	
Cleveland Open-Cup, °C, Min	D 92	-	-	-	-	-	-	100
	-	-	-	-	-	-	-	-
Viscosity:	-	-	-	-	-	-	-	-
Kinematic, @ 38 °C, cSt	D 2170	40-70	90-125	135-200	20-100	-	-	-
Saybolt Furol, @ 25 ° C SFS Max.	D 88	-	-	-	-	75-150	25-50	50
Water, % Max.	D 95	0.	0.5	0.5	0.	-	-	-
Asphaltnes, %s	D 2006-70	3-6	4-8	5-10	0-5	5-15	5-15	5-10
Saturates. % Min.	D 2006-70	25	25	25	10	25	25	8
24-Hour Settlement, %	D 244	-	-	-	-	2.0	2.0	2.0
Sieve Test, % Max.	D 244	-	-	-	-	-	-	0.1
Distillation Tests								
Total Distillate to 288 °C, Max. % by Volume	D 244	35	30	30	5	-	-	50
Total Distillate to 360 °C, Max. % by Volume	D 402	-	-	-	-	-	-	-
Oil Distillate, % by Volume	D 244	-	-	-	-	-	10-20	5
Total Residue, % by Weight	D 244	-	-	-	-	60	55	45
Test on Residue from Distillate								
Viscosity, Kenmatic, @ 38 °C ,cST	D 2170	75-250	200-600	500-1500	20-150	-	-	-
Viscosity, Kenmatic, @ 50 °C, cST	D 2170	-	-	-	-	200-600	150-450	250-1200
Solubility in Trichloroethylene, % Min.	D 2042	98	98	98	98	96	96	98
Ductility, CM Min.	D 113	-	-	-	-	-	-	-

TABLE OF CONTENTS

Reconstruction Costs	-	1 Page
Schedule of Items	-	4 Pages
Reconstruction Plans	-	26 Pages
Specifications Listing	-	3 Pages
Supplemental Specifications	-	75 Pages
U.S. Army Corps of Engineers Regional General Permit for U.S. Forest Service and Bureau of Land Management Aquatic Habitat Restoration within the State of Oregon	-	9 Pages

Specified Road Reconstruction

1/12/2016

RECONSTRUCTION COSTS

Proj. Number	Estimated Costs	
NFSR 4630170	$45,864.50	
NFSR 4635000	$74,750.20	
NFSR 4635120	$28,246.25	
NFSR 5700000	$22,542.39	
NFSR 5720000	$61,310.81	
Total:	$232,714.15	
	$31,933.76	← CT5.213# Deposits for Reconstruction Engineering Services
TOTAL RECONSTRUCTION	$264,647.91	
Public Works Cost =	$306,729.64	

PART I - SCHEDULE OF ITEMS

SECTION B – SERVICES AND PRICES

Lake Timber Sale

Clackamas Ranger District
Mt. Hood National Forest
Clackamas County

National Forest Service Road 4630170 – 1.00 Mile

PAY ITEM NUMBER	DESCRIPTION	UNIT OF MEASURE	QUANTITY	UNIT PRICE	COST
15101	Mobilization	Lump Sum	All	$5,830.00	$5,830.00
15201	Construction survey and staking, method I, tolerance C	Lump Sum	All	$1,210.00	$1,210.00
15713	Soil Erosion & Pollution Control	Lump Sum	All	$560.00	$560.00
15755	Soil erosion control & pollution prevention	Each	3	$960.00	$2,880.00
20204	Special Clearing and Grubbing, trees in the ditch, disposal of tops and limbs (g), logs (g), stumps (f(1))	Mile	1.00	$1,420.00	$1,420.00
20253	Removal of individual trees, miscellaneous; disposal of tops limbs (f) & logs (i)	Each	11	$180.00	$1,980.00
20358	Removal of culverts, disposal method a	Each	2	$190.00	$380.00
20401	Roadway excavation, Compaction Method B finishing method (n/a)	Cubic Yard*	149	$12.00	$1,788.00
20419	Drainage excavation, type: lead off ditch	Foot	80	$10.00	$800.00
20462	Unclassified borrow, compaction method b	Cubic Yard*	30	$15.00	$450.00
21201	Linear grading	Mile	0.09	$6,950.00	$625.50
23051	Roadside brushing, disposal method (g)	Mile	1.00	$1,500.00	$1,500.00
25101	Placed riprap, class 3 (Government stockpile)	Cubic Yard*	17	$34.00	$578.00
30359	Roadway reconditioning, Compaction B	Mile	1.00	$1,970.00	$1,970.00
32222	Pit run maximum size 4-in, compaction method B (Government Stockpile)	Cubic Yard*	272	$32.00	$8,704.00
32232	Haul and place stockpile aggregate, Compaction Method B (Government Stockpile)	Cubic Yard*	125	$29.00	$3,625.00
60262	66-in span x 51-in rise corrugated steel pipe-arch, aluminized, coated 0.168-in thickness. Method B	Foot	40	$98.00	$3,920.00
60276A	24 -inch corrugated aluminized steel pipe, 0.109 -inch thickness. Method B	Foot	36	$109.00	$3,924.00
60276B	36 -inch corrugated aluminized steel pipe, 0.138-inch thickness. Method B	Foot	40	$83.00	$3,320.00
63501	Temporary Traffic Control	Lump Sum	All	$400.00	$400.00

Total: $45,864.50

*Denotes Contract Quantity
Payment will be made on actual work performed as described in FP-03 109.01 unless otherwise noted.

National Forest Service Road 4635000 – 5.62 Miles

PAY ITEM NUMBER	DESCRIPTION	UNIT OF MEASURE	QUANTITY	UNIT PRICE	COST
15101	Mobilization	Lump Sum	All	$4,447.00	$4,447.00
15201	Construction survey and staking, method I, tolerance C	Lump Sum	All	$1,210.00	$1,210.00
15713	Soil Erosion & Pollution Control	Lump Sum	All	$3,150.00	$3,150.00
15755	Erosion control & pollution prevention	Each	2	$710.00	$1,420.00
20204	Special Clearing and Grubbing, trees in the ditch, disposal of tops and limbs (g), logs (g), stumps (f(1))	Mile	5.62	$1,530.00	$8,598.60
20253	Removal of individual trees, miscellaneous; disposal of tops & limbs (f) & logs (i)	Each	10	$140.00	$1,400.00
20358	Removal of culverts, disposal method a	Each	2	$320.00	$640.00
20401	Roadway excavation, Compaction Method B, finishing method (n/a)	Cubic Yard*	46	$15.00	$690.00
20457	Roadway excavation, compaction method b	Cubic Yard*	20	$16.00	$320.00
20464A	Excavation, compaction method b	Lump Sum	All	$635.00	$635.00
20464B	Excavation, compaction method b	Lump Sum	All	$199.00	$199.00
20701	Earthwork geotextile, type IV(B)	Square Yard*	28	$6.50	$182.00
23051	Roadside brushing, disposal method (g)	Mile	5.62	$1,500.00	$8,430.00
25101	Placed riprap, class 3 (Government stockpile)	Cubic Yard*	6	$36.00	$216.00
25703	Alternate retaining wall, type Precast Concrete Barrier	Lump Sum	All	$2,414.00	$2,414.00
30359	Roadway reconditioning, Compaction B	Mile	5.62	$2,180.00	$12,251.60
32222	Pit run maximum size 4-inch, Compaction Method B (Government Stockpile)	Cubic Yard*	26	$64.00	$1,664.00
32232	Haul and place stockpile aggregate, Compaction Method B (Government stockpile)	Cubic Yard*	643	$29.00	$18,647.00
60276A	24 -inch corrugated aluminized steel pipe, 0.109-inch thickness method b	Foot	80	$49.00	$3,920.00
63307	Delineators, white carsonites	Each	3	$750.00	$2,250.00
63501	Temporary Traffic Control	Lump Sum	All	$2,248.00	$2,248.00

Total: $74,750.20

*Denotes Contract Quantity

Payment will be made on actual work performed as described in FP-03 109.01 unless otherwise noted.

National Forest Service Road 4635120 – 2.39 Miles

PAY ITEM NUMBER	DESCRIPTION	UNIT OF MEASURE	QUANTITY	UNIT PRICE	COST
15101	Mobilization	Lump Sum	All	$3421.00	$3421.00
20253	Removal of individual trees, miscellaneous; disposal of tops & limbs (f) & logs (i)	Each	5	$140.00	$700.00
20401	Roadway excavation, Compaction Method B finishing method (n/a)	Cubic Yard*	6	$30.00	$150.00
23051	Roadside brushing, disposal method (g)	Mile	2.39	$1,500.00	$3,585.00
30359	Roadway reconditioning, Compaction B	Mile	2.39	$975.00	$2,330.25
32232	Haul and place stockpile aggregate, compaction method B (Government Stockpile)	Cubic Yard*	804	$21.00	$16,884.00
63501	Temporary Traffic Control	Lump Sum	All	$1,176.00	$1,176.00

Total: $28,246.25

*Denotes Contract Quantity
Payment will be made on actual work performed as described in FP-03 109.01 unless otherwise noted.

National Forest Service Road 5700000 – 4.97 Miles

PAY ITEM NUMBER	DESCRIPTION	UNIT OF MEASURE	QUANTITY	UNIT PRICE	COST
15101	Mobilization	Lump Sum	All	$4,583.00	$4,583.00
30359A	Roadway reconditioning, asphalt surface, mechanical broom	Mile	4.97	$679.00	$3,374.63
63401A	Pavement markings, double yellow stripe, type 'B'	Mile	9.94	$1,689.60	$16,794.62
63401B	Pavement markings, single white fog stripe, type 'B'	Mile	9.94	$844.80	$16,794.62
63501	Temporary Traffic Control	Lump Sum	All	$1,988.00	$1,988.00

Total: $22,542.39

*Denotes Contract Quantity
Payment will be made on actual work performed as described in FP-03 109.01 unless otherwise noted.

National Forest Service Road 5720000 – 2.70 Miles

PAY ITEM NUMBER	DESCRIPTION	UNIT OF MEASURE	QUANTITY	UNIT PRICE	COST
15101	Mobilization	Lump Sum	All	$3796.00	$3,796.00
15201	Construction survey and staking, method i, tolerance c	Lump Sum	All	$1,455.00	$1,455.00
15713	Soil Erosion & Pollution Control	Lump Sum	All	$1,512.00	$1,512.00
15755	Erosion control & pollution prevention	Each	1	$2,000.00	$2,000.00
20253	Removal of individual trees, miscellaneous; disposal of tops & limbs (f) & logs (i)	Each	15	$140.00	$2,100.00
20358	Removal of culverts, disposal method a	Each	1	$230.00	$230.00
20359	Removal of asphalt, disposal method a	Square Yard	94	$6.30	$592.20
20401	Roadway excavation, Compaction Method b, finishing method (n/a)	Cubic Yard*	656	$17.50	$11,480.00
20464C	Excavation, compaction method b	Lump Sum	All	$150.00	$150.00
20965	Backfill material	Cubic Yard*	52	$28.50	$1,482.00
25101	Placed riprap, class 3 (Government stockpile)	Cubic Yard*	3	$36.00	$216.00
26201	Geogrid, Category 4	Square Yard	205	$11.25	$2,305.91
30304	Road reconditioning, ditch	Mile	2.70	$1,707.00	$4,608.90
30359A	Road reconditioning, asphalt surface, mechanical broom	Mile	2.70	$679.00	$1,833.30
32222	Pit run maximum size 4-inch, compaction method b (Government Stockpile)	Cubic yard*	140	$30.00	$4,200.00
32232	Haul and place stockpile aggregate, compaction method B (Government Stockpile)	Cubic yard*	119	$33.00	$3,927.00
40451	ODOT 1/2-inch dense graded HMAC, level 2, asphalt cement PG 64-22	Ton	77.7	$150.00	$11,655.00
60276C	48 -inch corrugated aluminized steel pipe, 0.168-inch thickness method b	Foot	70	$56.00	$3,920.00
63307	Delineators, white carsonites	Each	3	$922.50	$2,767.50
63501	Temporary Traffic Control	Lump Sum	All	$1,080	$1,080.00

Total: $61,310.81

*Denotes Contract Quantity

Payment will be made on actual work performed as described in FP-03 109.01 unless otherwise noted.

FOREST SERVICE - REGION SIX
MT HOOD NATIONAL FOREST
CLACKAMAS RIVER RANGER DISTRICT
CLACKAMAS COUNTY

PLANS FOR

LAKE TIMBER SALE

SPECIFIED ROADS		
ROAD NUMBER	MILE POSTS	TYPE OF WORK
NFSR 4630170	0.00 - 1.00	RECONSTRUCTION
NFSR 4635000	0.00 - 5.62	RECONSTRUCTION
NFSR 4635120	0.00 - 2.39	RECONSTRUCTION
NFSR 5700000	0.00 - 4.97	RECONSTRUCTION
NFSR 5720000	0.00 - 2.70	RECONSTRUCTION

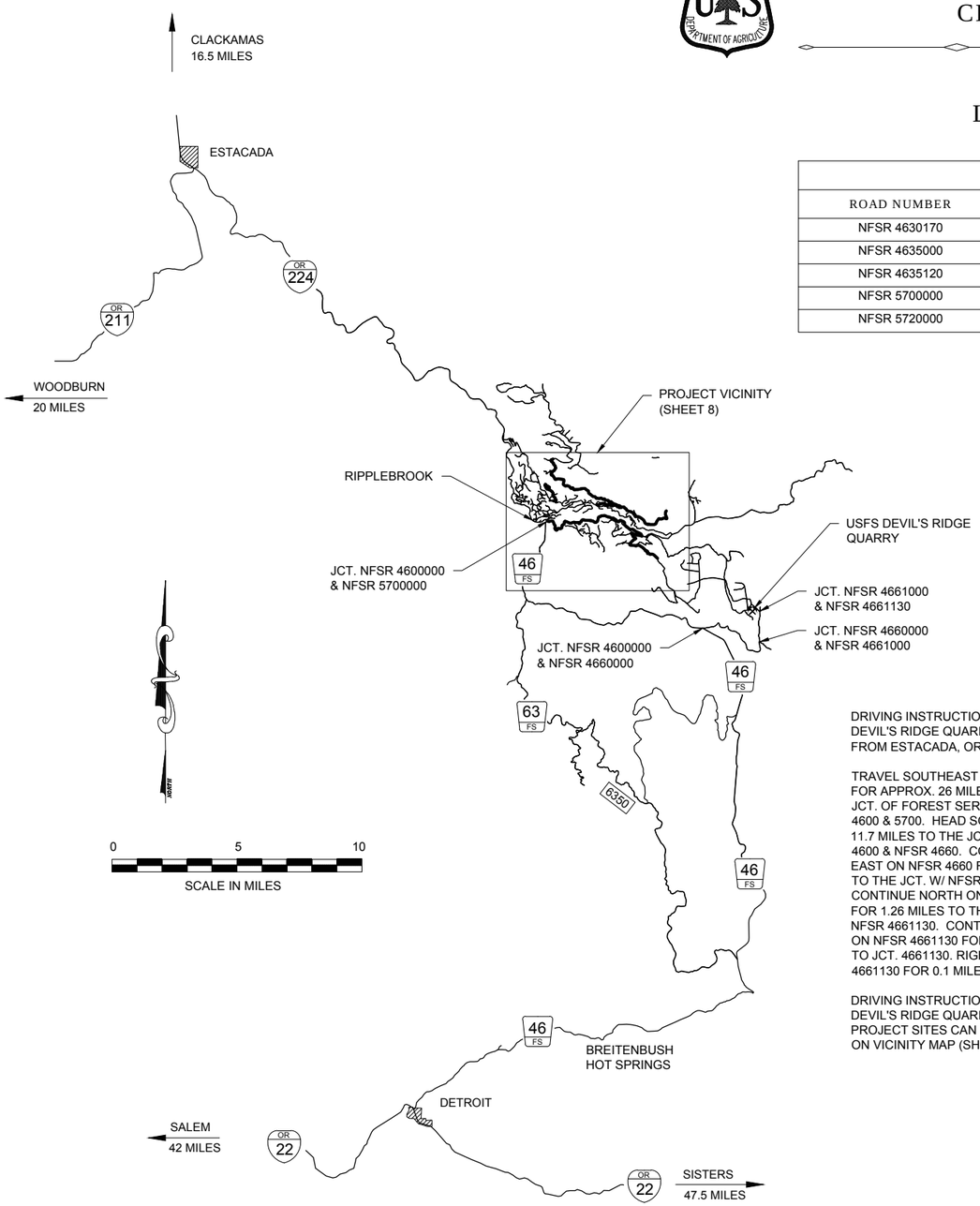

PROJECT LOCATION MAP

DRIVING INSTRUCTIONS TO DEVIL'S RIDGE QUARRY FROM ESTACADA, OR,

TRAVEL SOUTHEAST ON HWY. 224 FOR APPROX. 26 MILES TO THE JCT. OF FOREST SERVICE ROAD 4600 & 5700. HEAD SOUTH FOR 11.7 MILES TO THE JCT W/ NFSR 4600 & NFSR 4660. CONTINUE EAST ON NFSR 4660 FOR 3.5 MILES TO THE JCT. W/ NFSR 4661. CONTINUE NORTH ON NFSR 4661 FOR 1.26 MILES TO THE JCT. OF NFSR 4661130. CONTINUE WEST ON NFSR 4661130 FOR 0.54 MILES TO JCT. 4661130. RIGHT ON 4661130 FOR 0.1 MILE TO QUARRY.

DRIVING INSTRUCTIONS TO DEVIL'S RIDGE QUARRY FROM PROJECT SITES CAN BE FOUND ON VICINITY MAP (SHEET 8)

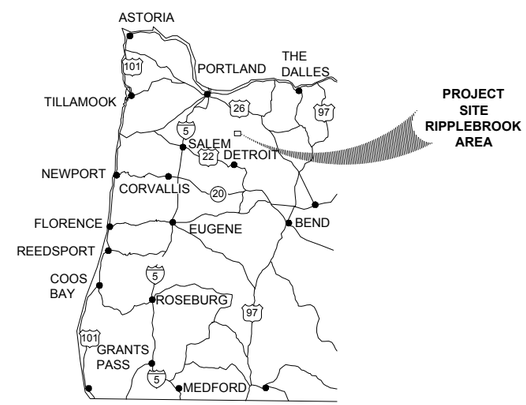

WESTERN OREGON
INDEX MAP

LOCATIONS		
TOWNSHIP	RANGE	SECTIONS
T05S	R06E	26, 27, 34, 35, 36
T05S	R07E	31, 32
T06S	R06E	1, 2
T06S	R07E	3, 5, 6, 8, 9

SHEET INDEX

1	TITLE SHEET
2	VICINITY MAP
3	GENERAL NOTES
4	ESTIMATE OF QUANTITIES
5	RECONSTRUCTION SUMMARY - NFSR 4630170
6	RECONSTRUCTION SUMMARIES - NFSR 4635000 & 4635120
7	RECONSTRUCTION SUMMARIES - NFSR 5700000 & 5720000
8	DRAINAGE LISTING
9	NFSR 4635000 MP 2.30 EXISTING SITE PLAN
10	NFSR 4635000 MP 2.30 PROPOSED SITE PLAN
11	JERSEY BARRIER DETAILS
12	NFSR 5720000 MP 1.18 EXISTING SITE PLAN
13	NFSR 5720000 MP 1.18 PROPOSED SITE PLAN
14	NFSR 5720000 MP 1.18 ROADWAY PROFILE & SECTIONS
15	NFSR 5720000 MP 1.18 WIRE WALL DETAILS
16	NFSR 5720000 MP 2.18 EXISTING SITE PLAN
17	NFSR 5720000 MP 2.18 PROPOSED SITE PLAN
18	NFSR 5720000 MP 2.18 EXCAVATION PROFILE & SECTION
19	NFSR 5720000 MP 2.18 ROADWAY PROFILE & SECTION
20	TYPICAL DEWATERING PLAN
21	DRAINAGE DOWN PIPE DETAILS
22	CULVERT INSTALLATION DETAILS
23	ROAD STRUCTURE DETAILS
24	BIOFILTER CHECK DAM DETAILS
25	DISPOSAL AND BRUSHING DETAILS
26	DEVIL'S RIDGE QUARRY DEVELOPMENT

SIGNATURES

DESIGNED BY

LINDA ROBLERO, TRAFFIC ENGINEER DATE

WALT HISLOP, CIVIL ENGINEER DATE

DRAWN BY

STEVE WEISNER, CIVIL ENGINEERING TECH DATE

REVIEWED BY

MIKE THOMAS, CIVIL ENGINEER DATE

PHIL BUREL, CIVIL ENGINEERING TECH DATE

JEFF CASWELL, CIVIL ENGINEER DATE

RECOMMENDED BY

PAUL PODESTA, ZONE ENGINEER DATE

APPROVAL

JACKIE GROCE, DISTRICT RANGER DATE

KRISTIN AUSTIN, SUB-REGIONAL ENGINEER DATE

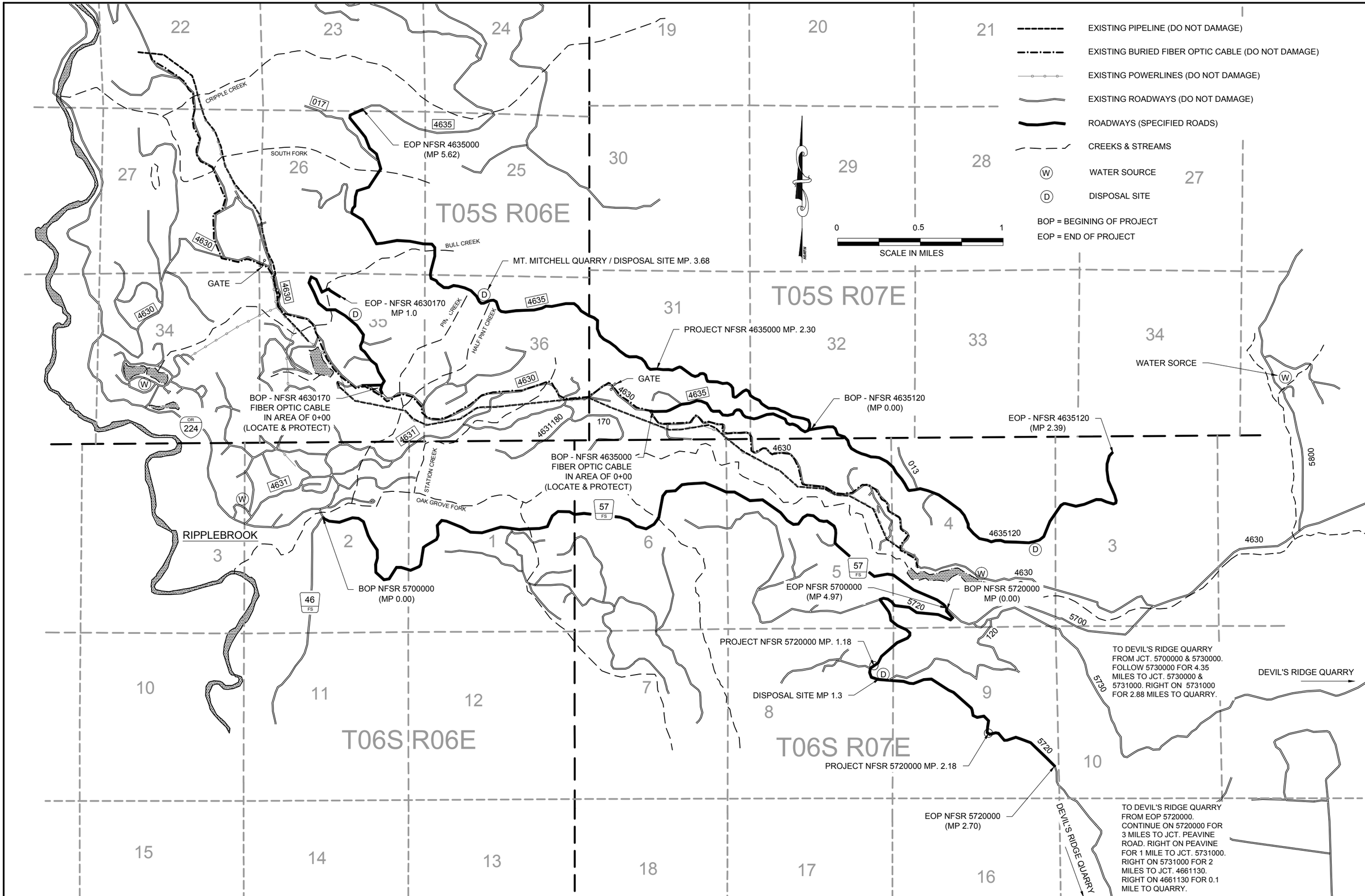
EXISTING PIPELINE (DO NOT DAMAGE)
EXISTING BURIED FIBER OPTIC CABLE (DO NOT DAMAGE)
EXISTING POWERLINES (DO NOT DAMAGE)
EXISTING ROADWAYS (DO NOT DAMAGE)
ROADWAYS (SPECIFIED ROADS)
CREEKS & STREAMS
WATER SOURCE
DISPOSAL SITE
BOP = BEGINING OF PROJECT
EOP = END OF PROJECT
0 0.5 1
SCALE IN MILES
NORTH
T05S R06E
T05S R07E
T06S R06E
T06S R07E
CRIPPLE CREEK
SOUTH FORK
BULL CREEK
PIN CREEK
HALF PINT CREEK
STATION CREEK
OAK GROVE FORK
RIPPLEBROOK
EOP NFSR 4635000 (MP 5.62)
MT. MITCHELL QUARRY / DISPOSAL SITE MP. 3.68
GATE
EOP - NFSR 4630170 MP 1.0
PROJECT NFSR 4635000 MP. 2.30
BOP - NFSR 4630170 FIBER OPTIC CABLE IN AREA OF 0+00 (LOCATE & PROTECT)
BOP - NFSR 4635120 (MP 0.00)
EOP - NFSR 4635120 (MP 2.39)
WATER SORCE
BOP - NFSR 4635000 FIBER OPTIC CABLE IN AREA OF 0+00 (LOCATE & PROTECT)
BOP NFSR 5700000 (MP 0.00)
EOP NFSR 5700000 (MP 4.97)
BOP NFSR 5720000 MP (0.00)
PROJECT NFSR 5720000 MP. 1.18
DISPOSAL SITE MP 1.3
PROJECT NFSR 5720000 MP. 2.18
EOP NFSR 5720000 (MP 2.70)
TO DEVIL'S RIDGE QUARRY FROM JCT. 5700000 & 5730000. FOLLOW 5730000 FOR 4.35 MILES TO JCT. 5730000 & 5731000. RIGHT ON 5731000 FOR 2.88 MILES TO QUARRY.
DEVIL'S RIDGE QUARRY
TO DEVIL'S RIDGE QUARRY FROM EOP 5720000. CONTINUE ON 5720000 FOR 3 MILES TO JCT. PEAVINE ROAD. RIGHT ON PEAVINE FOR 1 MILE TO JCT. 5731000. RIGHT ON 5731000 FOR 2 MILES TO JCT. 4661130. RIGHT ON 4661130 FOR 0.1 MILE TO QUARRY.
PACIFIC NORTHWEST REGION
PROJECT
LAKE TIMBER SALE
SHEET
VICINITY MAP
U.S.D.A. FOREST SERVICE
SHEETS 26
SHEET 2

GENERAL NOTES :

1. MT. HOOD NATIONAL FOREST COMMERCIAL ROAD USE RULES AND DEFINITIONS, 1992, ARE INCLUDED AS PART OF THIS CONTRACT BY REFERENCE.
2. ALL ROADWAY EXCAVATION AND EMBANKMENT EARTHWORK SHALL HAVE MAXIMUM ALLOWABLE DEVIATIONS FROM PLAN LINES, GRADES, CROSS SECTIONS, AND DIMENSIONS ACCORDING TO CONSTRUCTION TOLERANCE CLASS B AS DEFINED BY FSSS TABLE 152-1 CONSTRUCTION TOLERANCES*.
3. EXISTING TREES MAY BE REMOVED ONLY AS NECESSARY TO COMPLETE SPECIFIED WORK ACCORDING TO THE CONTRACT. ALL TREES OF MERCHANTABLE SIZE ARE PROPERTY OF THE US GOVERNMENT AND SHALL BE DECKED ON SITE AS DIRECTED BY THE CONTRACTING OFFICER. ALL TREES NOT OF MERCHANTABLE SIZE SHALL BE DISPOSED OF ACCORDING TO THE APPLICABLE WORK SPECIFICATIONS.
4. REMOVE ALL BERMS, EXISTING OR CREATED, TO ALLOW FOR DRAINAGE OF WATER FROM THE ROAD TRAVEL WAY, UNLESS OTHERWISE DESIGNATED TO REMAIN.
5. ALL DETAILS ARE TYPICAL DETAILS, AND ARE SECTION VIEW UNLESS OTHERWISE NOTED.
6. DESIGNATED DISPOSAL AREAS WILL BE FLAGGED BY THE CO PRIOR TO MATERIAL PLACEMENT. SEE SHEET 25 FOR MATERIAL DISPOSAL SITE DETAIL.
7. ALL WORK WITHIN STREAM CHANNELS MUST BE COMPLETED WITHIN THE ODF&W DEFINED IN-STREAM WORK WINDOW. DEWATERING WILL BE DELETED IF THERE IS NO WATER IN THE STREAM WHEN THE WORK IS DONE. THE INSTREAM WORK PERIOD FOR THIS PROJECT BEGINS JULY 15TH AND ENDS AUGUST 31ST .
8. SALVAGE EXISTING AGGREGATE DURING CULVERT REPLACEMENT; USE AS BEDDING AND BACKFILL MATERIAL.
9. DO NOT UNDERCUT BACKSLOPES WHEN CLEANING AND/OR RECONSTRUCTING DITCH LINES.
10. REBUILD FILLS WITH A MAXIMUM SLOPE STEEPNESS OF 1V:1.5H FILL SLOPES AND MINIMUM 1-ft. SHOULDERS.
11. RECONDITIONING OF ROADBED INCLUDES TURNOUTS AND CURVE WIDENING TO THE EXISTING CONDITIONS ON THE GROUND.
12. SPOT ROCK LOCATIONS WILL BE STAKED BY THE CO. AGGREGATE TAPER LENGTHS ARE INCLUDED ON BOTH ENDS OF ALL SPOT ROCK LOCATIONS.
13. RESTRICTIONS ON PURCHASER'S USE OF ROADS ARE INCLUDED IN TIMBER SALE CONTRACT PROVISIONS CT5.12 & CT5.31 AND IN THE SPECIFIED ROAD RECONSTRUCTION SPECIFICATIONS SECTIONS 156 & 107.
14. RESTRICTIONS ON TIMING AND DATES OF OPERATIONS ARE INCLUDED IN THE SPECIFIED ROAD RECONSTRUCTION SPECIFICATIONS SECTION 107.
15. ALL RECONSTRUCTION WORK MUST COMPLY WITH THE TERMS AND CONDITIONS OF THE U.S. ARMY CORPS OF ENGINEERS REGIONAL GENERAL PERMIT(401 WQC) FOR U.S. FOREST SERVICE AND BUREAU OF LAND MANAGEMENT AQUATIC HABITAT RESTORATION WITHIN THE STATE OF OREGON. (SEE ATTACHMENT)
16. UNSUITABLE MATERIAL ENCOUNTERED DURING EXCAVATION SHALL BE HAULED TO AN APPROVED DISPOSAL AREA. REFER TO THE TITLE SHEET FOR APPROVED SUITABLE BORROW MATERIAL SOURCE AT USFS DEVILS RIDGE QUARRY.
17. WHERE NECESSARY, LOWER CULVERT INSTALLATIONS TO OBTAIN THE MINIMUM 1-ft. OF COVER OVER CULVERTS. MINIMUM COVER DOES NOT INCLUDE DEPTH OF SURFACING.
18. STORAGE OF ALL EQUIPMENT AND MATERIALS ON GOVERNMENT LANDS WILL BE AT APPROVED LOCATIONS ONLY AND IS STORED AT THE PURCHASER'S RISK.
19. ANY DAMAGE TO THE EXISTING ROAD SYSTEM, INSIDE OR OUTSIDE OF THE WORK AREA, WILL BE REPAIRED AT THE PURCHASER'S EXPENSE PRIOR TO FINAL ACCEPTANCE OF THE PROJECT.
20. EXTRACT WATER FOR CONSTRUCTION OPERATIONS ONLY FROM APPROVED WATER SOURCES AS APPROVED BY THE CO.
    a. NO WATER SHALL BE WITHDRAWN FROM ANY OCCUPIED LISTED FISH HABITAT (LFH) STREAMS EXCEPT IN AN EMERGENCY (E.G., WILD FIRE) SITUATION.
    b. THE PURCHASER SHALL LIMIT WATER WITHDRAWALS FOR ROAD MAINTENANCE OR OTHER PURPOSES IN LFH AND WITHIN 1,500 FEET OF LFH TO 10 PERCENT OR LESS OF STREAM FLOW AT THE POINT OF WITHDRAWAL (VISUALLY ESTIMATED).
    c. THE PURCHASER SHALL LIMIT WATER WITHDRAWALS FOR ROAD MAINTENANCE OR OTHER PURPOSES IN NON-LFH STREAMS GREATER THAN 1,500 FEET FROM LFH LIMIT WITHDRAWAL BY 50 PERCENT OR LESS OF THE STREAM FLOW (VISUALLY ESTIMATED).
    d. REGARDLESS OF WATER WITHDRAWAL LOCATION, USE OF SCREEN MATERIAL WITH EITHER OF THE FOLLOWING MAXIMUM OPENINGS IS REQUIRED: 1.75 MM OPENING FOR WOVEN WIRE OR 3/32 INCH OPENING FOR PERFORATED PLATE.
21. BIOFILTER CHECK DAMS, AS SHOWN ON SHEET 24, ARE TO BE INSTALLED ABOVE EACH CULVERT INLET AS MARKED BY THE CONTRACTING OFFICER AND PAID FOR UNDER PAY ITEM 15713.
22. SEEDING AND MULCHING OF ALL DISTURBED AREAS IS REQUIRED AND CONSIDERED INCIDENTAL TO PAY ITEM 15713 - SOIL EROSION AND POLLUTION CONTROL. SEED WILL BE GOVERNMENT PROVIDED MATERIAL. REQUEST SEED FROM THE GOVERNMENT NO LESS THAN 10 DAYS PRIOR TO PLANNED APPLICATION.
23. REFUEL MECHANIZED EQUIPMENT AT LEAST 150 FEET FROM WATER BODIES. PARKING OF ALL EQUIPMENT OVERNIGHT OR FOR LONGER PERIODS OF TIME SHALL BE AT LEAST 150 FEET FROM WATER BODIES.

ESTIMATE OF QUANTITIES

	FS ROAD NUMBER		4630170	4635000	4635120	5700000	5720000	
	PROJECT LENGTH (MILES)		1.00	5.62	2.39	4.97	2.70	
PAY ITEM NUMBER	DESCRIPTION	UNIT OF MEASURE	QUANTITY					REMARKS
15101	MOBILIZATION	LUMP SUM	ALL	ALL	ALL	ALL	ALL	INCLUDES EQUIPMENT WASHING, MATERIAL TESTING, AND FIRE PROTECTION MEASURES.
15201	CONSTRUCTION SURVEY AND STAKING, METHOD I, TOLERANCE C	LUMP SUM	ALL	ALL			ALL	READ WORK SUMMARIES.
15713	SOIL EROSION & POLLUTION CONTROL	LUMP SUM	ALL	ALL			ALL	BEGIN INSTALLATION OF CHECK DAM(S) UPSTREAM FROM EACH CULVERT INLET AFTER COMPLETION OF 30359 AS SHOWN ON SHEET 24. APPLY GOVERNMENT PROVIDED SEED AT RATES LISTED IN SUBSECTION 625.07 AND CONTRACTOR PRODUCED MULCH AT A RATE OF 3000 lb./ac TO ALL DISTURBED AREAS AND DISPOSAL PILES.
15755	EROSION CONTROL AND POLLUTION PREVENTION	EACH	3	2			1	DEWATERING FOR CULVERT INSTALLATIONS.
20204	SPECIAL CLEARING AND GRUBBING, TREES IN THE DITCH, DISPOSAL OF TOPS AND LIMBS (g), LOGS (g), STUMPS (f(1))	MILE	1.00	5.62				USE DISPOSAL METHODS THAT APPLY ACCORDING TO FSSS 203.05. SEE RECONSTRUCTION SUMMARIES FOR DETAILS. APPLY GOVERNMENT PROVIDED SEED AND CONTRACTOR PRODUCED MULCH TO ALL DISTURBED AREAS (PAID UNDER 15713).
20253	REMOVAL OF INDIVIDUAL TREES, MISCELLANEOUS; DISPOSAL OF TOPS & LIMBS (f) & LOGS (i)	EACH	11	10	5		15	FALL DANGER TREES AS MARKED BY THE CO. DIRECTIONALLY FALL TREES AWAY FROM THE ROADWAY WHEREVER POSSIBLE. LIMB TREES ONLY AS NEEDED TO ENSURE THAT TREE TRUNK IS NO MORE THAN THREE FEET ABOVE GROUND SURFACE AFTER FELLING.
20358	REMOVAL OF CULVERTS, DISPOSAL METHOD a	EACH	2	2			1	REMOVE FROM GOVERNMENT LANDS AND DISPOSE OF IN LEGAL MANNER.
20359	REMOVAL OF ASPHALT, DISPOSAL METHOD a	SQUARE YARD					94	REMOVE FROM GOVERNMENT LANDS AND DISPOSE OF IN LEGAL MANNER.
20401	ROADWAY EXCAVATION, COMPACTION METHOD B, FINISHING METHOD (n/a)	CUBIC YARD*	149	46	6		656	EXCAVATE TRENCH TO REMOVE EXISTING CMP AND FOR INSTALLATION OF NEW CMP.
20419	DRAINAGE EXCAVATION TYPE LEAD OFF DITCH	FOOT	80					INCLUDES 50' DITCH ON RIGHT SIDE OF ROAD AND 30' LEAD-OFF DITCH AS STAKED BY CO.
20457	EXCAVATION, COMPACTION METHOD B	CUBIC YARD*		20				EXCAVATION FOR ODOT CONCRETE BARRIER RETAINING WALL.
20462	UNCLASSIFIED BORROW, COMPACTION METHOD B	CUBIC YARD*	30					HAUL AND PLACE SUITABLE UNCLASSIFIED BORROW MATERIAL AS BACKFILL MATERIAL AROUND PIPE. (ONSITE).
20464A	EXCAVATION, COMPACTION METHOD B	LUMP SUM		ALL				READ WORK SUMMARIES.
20464B	EXCAVATION, COMPACTION METHOD B	LUMP SUM		ALL				READ WORK SUMMARIES.
20464C	EXCAVATION, COMPACTION METHOD B	LUMP SUM					ALL	READ WORK SUMMARIES.
20701	EARTHWORK GEOTEXTILE, TYPE IV(b)	SQUARE YARD		28				READ WORK SUMMARIES.
20965	BACKFILL MATERIAL	CUBIC YARD*					52	LOCATED AT DEVILS RIDGE QUARRY SHOWN ON SHEET 26.
21201	LINEAR GRADING	MILE	0.09					GRADING/RESHAPING EXISTING ROAD TO PROVIDE 14-FT SUBGRADE WITH CURVE WIDENING.
23051	ROADSIDE BRUSHING, DISPOSAL METHOD (g)	MILE	1.00	5.62	2.39			BEGIN ROADSIDE BRUSHING. AS SHOWN ON SHEET 25.
25101	PLACED RIP RAP, CLASS 3 (GOVERNMENT SOURCE)	CUBIC YARD*	17	32			3	RIPRAP STOCKPILED AT DEVILS RIDGE QUARRY AS SHOWN ON SHEET 26.
25703	ALTERNATE RETAINING WALL CONCRETE BARRIER, TYPE PRECAST CONCRETE BARRIER.	LUMP SUM		ALL				INSTALL 48-ft. LONG ODOT PRECAST CONCRETE BARRIER PIN AND LOOP ASSEMBLY RETAINING WALL (JERSEY BARRIER) AS SHOWN ON SHEETS 10 AND 11. JERSEY BARRIERS TO BE PURCHASER PROVIDED COMMERCIAL SOURCE MATERIAL.
26201	GEOGRID, CATEGORY 4	SQUARE YARD					205	REFER TO SHEET 15.
30304	ROAD RECONDITIONING, DITCH	MILE					2.70	RESHAPE DITCH ACCORDING TO ROAD STRUCTURES DETAIL, SHEET 23. INCLUDES SPECIAL CLEARING PER SECTION 202 AND DISPOSAL OF VEGETATIVE MATERIAL PER SECTION 203 - DISPOSAL OF TOPS AND LIMBS (g), LOGS (g), STUMPS (f(1)). HAUL MATERIAL FROM SLOUGH AND SLIDE REMOVAL TO DISPOSAL AREA. APPLY GOVERNMENT PROVIDED SEED AND CONTRACTOR PRODUCED MULCH TO ALL DISTURBED AREAS (PAID UNDER 15713).
30359	ROADWAY RECONDITIONING, COMPACTION b	MILE	1.00	5.62	2.39			READ WORK SUMMARY.
30359A	ROAD RECONDITIONING, ASPHALT SURFACE, MECHANICAL BROOM	MILE				4.97	2.70	READ WORK SUMMARY.
32222	PIT RUN MAXIMUM SIZE 4", COMPACTION METHOD B (GOVERNMENT STOCKPILE)	CUBIC YARD*	272				140	PIT RUN STOCKPILED AT DEVILS RIDGE QUARRY SHOWN ON SHEET 26.
32232	HAUL AND PLACE STOCKPILE AGGREGATE, COMPACTION METHOD B (GRADING AGGREGATE, GOVERNMENT STOCKPILE)	CUBIC YARD*	125	643	804		119	AGGREGATE STOCKPILED AT DEVILS RIDGE QUARRY SHOWN ON SHEET 26.
40451	ODOT 1/2-INCH DENSE GRADED HMAC, LEVEL 2, ASPHALT CEMENT PG 64-22	TON					77.7	READ WORK SUMMARY.
60262	66-IN SPAN X 51-IN RISE CORRUGATED STEEL PIPE-ARCH, ALUMINIZED, COATED 0.168-IN THICKNESS, METHOD B	FOOT	40					UNSUITABLE MATERIAL ENCOUNTERED MUST BE REMOVED. BORROW MATERIAL IS INDIRECT TO THIS PAY ITEM. BEDDING, BACKFILL, AND COMPACTION ARE INDIRECT TO PAY ITEM 60262.
60276A	24 -INCH CORRUGATED ALUMINIZED STEEL PIPE, 0.109-INCH THICKNESS, METHOD B	FOOT	36	80				UNSUITABLE MATERIAL ENCOUNTERED MUST BE REMOVED. BORROW MATERIAL IS INDIRECT TO THIS PAY ITEM. BEDDING, BACKFILL, AND COMPACTION ARE INDIRECT TO PAY ITEM 60276A.
60276B	36 -INCH CORRUGATED ALUMINIZED STEEL PIPE, 0.138-INCH THICKNESS, METHOD B	FOOT	40					UNSUITABLE MATERIAL ENCOUNTERED MUST BE REMOVED. BORROW MATERIAL IS INDIRECT TO THIS PAY ITEM. BEDDING, BACKFILL, AND COMPACTION ARE INDIRECT TO PAY ITEM 60276B.
60276C	48 -INCH CORRUGATED ALUMINIZED STEEL PIPE, 0.168-INCH THICKNESS, METHOD B	FOOT					70	UNSUITABLE MATERIAL ENCOUNTERED MUST BE REMOVED. BORROW MATERIAL IS INDIRECT TO THIS PAY ITEM. BEDDING, BACKFILL, AND COMPACTION ARE INDIRECT TO PAY ITEM 60276C.
63307	DELINEATORS, WHITE CARSONITES.	EACH		3			3	INSTALL 3 DELINEATORS WITH WHITE DIAMOND REFLECTOR AS STAKED BY THE CO ACCORDING TO THE MUTCD SECTION 3D.03.
63401A	PAVEMENT MARKINGS, YELLOW STRIPE, TYPE 'B'	FOOT				9.94		PAID BY PAY ITEM 30359A
63401B	PAVEMENT MARKINGS, WHITE FOG STRIPE, TYPE 'B'	FOOT				9.94		PAID BY PAY ITEM 30359A
63501	TEMPORARY TRAFFIC CONTROL	LUMP SUM	ALL	ALL	ALL	ALL	ALL	INCLUDES ALL NECESSARY LABOR AND MATERIALS. ALL TRAFFIC CONTROL MEASURES MUST COMPLY WITH THE MOST CURRENT VERSION OF THE MANUAL ON UNIFORM TRAFFIC CONTROL DEVICES (MUTCD).

* DENOTES CONTRACT QUANTITY

PROJECT LAKE TIMBER SALE

PACIFIC NORTHWEST REGION

SHEET ESTIMATE OF QUANTITIES

U.S.D.A. FOREST SERVICE

SHEET 4 SHEETS 26

FS ROAD 4630170 RECONSTRUCTION SUMMARY

MILE POST	PAY ITEM	QUANTITY	UNIT	DESCRIPTION OF WORK
0.00				BEGINNING OF PROJECT. JUNCTION WITH FOREST SERVICE ROAD 4630 AT MILE POST 2.78.
	15101	ALL	LUMP SUM	MOBILIZATION
	15201	ALL	LUMP SUM	RESPONSIBLE FOR ALL REQUIRED SITE SURVEYING.
	15713	ALL	LUMP SUM	BEGIN INSTALLATION OF CHECK DAM(S) UPSTREAM FROM EACH CULVERT INLET AFTER COMPLETION OF 30359.
	20204	1.00	MILE	BEGIN CLEARING AND GRUBBING OF ALL TREES WITHIN THE ROAD SHOULDER AND DRAINAGE DITCH AS SHOWN ON SHEET 25. GRUBBING & DISPOSAL OF ALL VEGETATION & ROOT MASSES WITHIN ROAD SHOULDER AND IN THE DITCH IS REQUIRED UNLESS OTHERWISE NOTED IN THE WORK DESCRIPTION. APPLY GOVERNMENT PROVIDED SEED AND CONTRACTOR PRODUCED MULCH TO ALL DISTURBED AREAS.
	23051	1.00	MILE	BEGIN ROADSIDE BRUSHING. REFER TO THE BRUSHING TYPICAL, SHEET 25. APPLY GOVERNMENT PROVIDED SEED AND CONTRACTOR PRODUCED MULCH TO ALL DISTURBED AREAS.
	30359	1.00	MILE	BEGIN ROADWAY RECONDITIONING. HAUL MATERIAL FROM SLOUGH AND SLIDE REMOVAL TO DISPOSAL AREA. SCARIFY MINIMUM 1" BELOW THE DEPTH OF ALL POTHOLES WASHBOARDS OR SURFACE IRREGULARITIES. CLEAN CULVERTS AS SPECIFIED IN THE SPECIFICATIONS.
	63501	ALL	LUMP SUM	INSTALL TEMPORARY TRAFFIC CONTROL. INCLUDES ALL NECESSARY LABOR AND MATERIALS.
0.23				JUNCTION LEFT WITH ROAD 4630016.
0.37				JUNCTION RIGHT WITH ROAD 4630017.
	21201	0.09	MILE	BEGIN LINEAR GRADING, RESHAPE EXISTING ROAD TO PROVIDE 14-FT WIDE COMPACTED SUBGRADE WITH CURVE WIDENING SECTIONS AS STAKED BY THE CO PRIOR TO PLACING PIT RUN (PAY ITEM 32222).
	32222	222	CUBIC YARD*	LOAD, HAUL, AND PLACE GOVERNMENT PROVIDED PIT RUN 9" DEEP BY 14' WIDE OVER APPROVED SUBGRADE FOR 571-FT AS MARKED BY THE CO. PIT RUN QUANTITY INCLUDES QUANTITY FOR CURVE WIDENING. GOVERNMENT SOURCE IS DEVILS RIDGE QUARRY AS SHOWN ON SHEET 26.
	32232	93	CUBIC YARD*	PLACE 4" CRUSHED AGGREGATE FULL DEPTH OVER APPROVED SUBGRADE FOR 634-FT AS STAKED BY THE CO WITH 10' TAPERS ON EACH END AND A 12' MINIMUM WIDTH. BLEND TO ADJACENT ROAD SURFACES TO PROVIDE A SMOOTH TRANSITION.
0.43				END 21201 LINEAR GRADING
0.44	20419	80	FOOT	BEGIN RECONSTRUCTION OF DITCH RIGHT SIDE TO CAPTURE SPRINGS IN CUT SLOPE. CONSTRUCT 30-FT LEAD OFF DITCH AS STAKED BY CO.
0.47	15755	1	EACH	DEWATER SITE
	20401	15	CUBIC YARD*	EXCAVATE TRENCH TO REMOVE EXISTING CMP AND FOR INSTALLATION OF NEW CMP.
	60276A	36	FOOT	INSTALL 24-IN ALUMINIZED CORRUGATED STEEL PIPE.
	32232	6	CUBIC YARD*	PLACE 4" CRUSHED AGGREGATE FULL DEPTH OVER APPROVED SUBGRADE FOR 40-FT WITH 10' TAPERS ON EACH END AND A 12' TOP WIDTH. BLEND TO ADJACENT ROAD SURFACES TO PROVIDE A SMOOTH TRANSITION.
	25101	3	CUBIC YARD*	HAUL AND PLACE RIPRAP FOR ARMORING INLET/ENERGY DISSIPATER AT OUTLET. GOVERNMENT SOURCE IS DEVILS RIDGE QUARRY AS SHOWN ON 26.
	20358	1	EACH	REMOVE EXCAVATED CULVERT FROM FOREST SERVICE LAND AND DISPOSE IN LEGAL MANNER.
0.54	20253	1	EACH	REMOVE LOG FROM THE ROADWAY AS MARKED BY THE CO, AND SCATTER OUTSIDE CLEARING LIMITS.
0.57	15755	1	EACH	DEWATER SITE
	20401	60	CUBIC YARD*	EXCAVATE EXISTING WASHOUT AND PREPARE FOR NEW CMP INSTALL. SALVAGE SUITABLE MATERIAL AS BACKFILL.
	60276B	40	FOOT	INSTALL 36-IN ALUMINIZED CORRUGATED STEEL PIPE.
	20462	30	CUBIC YARD*	HAUL AND PLACE SUITABLE ONSITE UNCLASSIFIED BORROW MATERIAL AS BACKFILL MATERIAL AROUND PIPE. (ONSITE).
	32222	30	CUBIC YARD*	HAUL AND PLACE PIT RUN TO OBTAIN SUBGRADE WIDTH FOR REBUILDING WASHOUT . GOVERNMENT SOURCE IS DEVILS RIDGE QUARRY AS SHOWN ON SHEET 25.
	32232	20	CUBIC YARD*	PLACE 4" CRUSHED AGGREGATE FULL DEPTH BEGINNING 60-FT BEFORE CULVERT THRU 40-FT AS MARKED BY THE CO WITH 10' TAPERS ON EACH END AND A 12' TOP WIDTH. BLEND TO ADJACENT ROAD SURFACES TO PROVIDE A SMOOTH TRANSITION.
	25101	3	CUBIC YARD*	HAUL AND PLACE RIPRAP FOR ARMORING INLET/ENERGY DISSIPATER AT OUTLET. GOVERNMENT SOURCE IS DEVILS RIDGE QUARRY AS SHOWN ON 25.
0.65	15755	1	EACH	DEWATER SITE
	20401	74	CUBIC YARD*	EXCAVATE TRENCH TO REMOVE EXISTING CMP AND FOR INSTALLATION OF NEW CMP.
	60262	40	FOOT	INSTALL 66-IN SPAN X 51-IN RISE ALUMINIZED CORRUGATED STEEL (SQUASHED) PIPE.
	32222	20	CUBIC YARD*	HAUL AND PLACE PIT RUN FOR REBUILDING WASHOUT TO OBTAIN SUBGRADE WIDTH. GOVERNMENT SOURCE IS DEVILS RIDGE QUARRY AS SHOWN ON SHEET 26.
	25101	11	CUBIC YARD*	HAUL AND PLACE RIPRAP FOR ARMORING INLET/ENERGY DISSIPATER AT OUTLET. GOVERNMENT SOURCE IS DEVILS RIDGE QUARRY AS SHOWN ON 26.
	32232	6	CUBIC YARD*	PLACE 4" CRUSHED AGGREGATE FULL DEPTH OVER APPROVED SUBGRADE FOR 40-FT WITH 10' TAPERS ON EACH END AND A 12' TOP WIDTH. BLEND TO ADJACENT ROAD SURFACES TO PROVIDE A SMOOTH TRANSITION.
	20358	1	EACH	REMOVE EXCAVATED CULVERT FROM FOREST SERVICE LAND AND DISPOSE OF IN LEGAL MANNER.
1.00				END OF PROJECT. END 15713, 20204, 23051, AND 30359. REMOVE RUSTED BARREL FROM GOVERNMENT LANDS. (INDIRECT TO PAY ITEM 20358).
	20253	10	EACH	FALL DANGER TREES AS MARKED BY THE CO. DIRECTIONALLY FALL TREES AWAY FROM THE ROADWAY WHEREVER POSSIBLE. LIMB TREES ONLY AS NEEDED TO ENSURE THAT TREE TRUNK IS NO MORE THAN THREE FEET ABOVE GROUND SURFACE AFTER FELLING.

* - DENOTES CONTRACT QUANTITY

PROJECT
LAKE TIMBER SALE
PACIFIC NORTHWEST REGION

SHEET
RECONSTRUCTION SUMMARY - NFSR 4630170
U.S.D.A. FOREST SERVICE

SHEET 5 SHEETS 26

FS ROAD 4635000 RECONSTRUCTION SUMMARY

MILE POST	PAY ITEM	QUANTITY	UNIT	DESCRIPTION OF WORK
0.00				BEGINNING OF PROJECT. JUNCTION WITH FOREST SERVICE ROAD 4630 MILE POST 4.80.
	15101	ALL	LUMP SUM	INCLUDES MOVING PERSONNEL, EQUIPMENT, MATERIAL, AND INCIDENTALS TO THE PROJECT AND PERFORMING ALL WORK NECESSARY BEFORE BEGINNING WORK AT THE PROJECT SITE.
	15201	ALL	LUMP SUM	RESPONSIBLE FOR ALL REQUIRED SITE SURVEYING.
	15713	ALL	LUMP SUM	BEGIN INSTALLATION OF CHECK DAM(S) UPSTREAM FROM EACH CULVERT INLET AFTER COMPLETION OF PAY ITEM 30359.
	20204	5.62	MILE	BEGIN CLEARING AND GRUBBING OF ALL TREES WITHIN THE ROAD SHOULDER AND DRAINAGE DITCH AS SHOWN ON SHEET 24. GRUBBING & DISPOSAL OF ALL VEGETATION & ROOT MASSES WITHIN ROAD SHOULDER AND IN THE DITCH IS REQUIRED UNLESS OTHERWISE NOTED IN THE WORK DESCRIPTION. APPLY GOVERNMENT PROVIDED SEED AND CONTRACTOR PRODUCED MULCH TO ALL DISTURBED AREAS.
	23051	5.62	MILE	BEGIN ROADSIDE BRUSHING. REFER TO THE BRUSHING TYPICAL SHEET 25. APPLY GOVERNMENT PROVIDED SEED AND CONTRACTOR PRODUCED MULCH TO ALL DISTURBED AREAS.
	30359	5.62	MILE	BEGIN ROADWAY RECONDITIONING. HAUL MATERIAL FROM SLOUGH AND SLIDE REMOVAL TO DISPOSAL AREA. SCARIFY MINIMUM 1" BELOW THE DEPTH OF ALL POTHOLES WASHBOARDS OR SURFACE IRREGULARITIES. CLEAN CULVERTS AS SPECIFIED IN THE SPECIFICATIONS. REMOVE 6 LARGE BOULDERS FROM ROADWAY AT M.P. 4.29 AND PLACE THEM 3-FT AWAY FROM EDGE OF SHOULDER AS MARKED BY CO. REMOVE ALL BERMS TO PROVIDE FOR POSITIVE DRAINAGE.
	63501	All	LUMP SUM	INSTALL TEMPORARY TRAFFIC CONTROL. INCLUDES ALL NECESSARY LABOR AND MATERIAL.
1.10				JUNCTION FOREST SERVICE ROAD 4635120 ROAD RIGHT. (REFERENCE ONLY)
2.30	20457	20	CUBIC YARD*	BEGIN EXCAVATION FOR ODOT CONCRETE BARRIER RETAINING WALL. HAUL MATERIAL TO DISPOSAL SITE.
	25703	All	LUMP SUM	CONSTRUCT 48-FT LONG ODOT CONCRETE BARRIER RETAINING WALL AS SHOWN ON SHEETS 10, AND 11.
	32232	15	CUBIC YARD*	PLACE 4" CRUSHED AGGREGATE FULL DEPTH OVER PREPARED SUBGRADE FOR 90-FT AS MARKED BY THE CO WITH 10' TAPERS ON EACH END AND A 12' TOP WIDTH. BLEND TO ADJACENT ROAD SURFACES TO PROVIDE SMOOTH TRANSITION.
	63307	3	EACH	INSTALL 3 CARSONITES AS STAKED BY THE CO. ACCORDING TO THE MUTCD SECTION 3D.03 INDIRECT TO THIS PAY ITEM.
2.63				CLOSED SPUR ROAD RIGHT. (REFERENCE ONLY)
2.66	15755	1	EACH	DEWATER SITE.
	20401	18	CUBIC YARD*	EXCAVATE TRENCH TO REMOVE EXISTING CMP AND FOR INSTALLATION OF NEW CMP.
	60276A	34	FOOT	INSTALL 24-IN ALUMINIZED CORRUGATED STEEL PIPE.
	32232	6	CUBIC YARD*	PLACE 4" CRUSHED AGGREGATE FULL DEPTH OVER PREPARED SUBGRADE FOR 30-ft. LENGTH AS MARKED BY THE CO WITH 10-ft. TAPERS ON EACH END AND A 12-ft. TOP WIDTH. BLEND TO ADJACENT ROAD SURFACES TO PROVIDE SMOOTH TRANSITION.
	25101	3	CUBIC YARD*	HAUL AND PLACE RIPRAP FOR ARMORING INLET AND CONSTRUCTING ENERGY DISSIPATER AT OUTLET. USE GOVERNMENT SOURCE MATERIAL FROM DEVILS RIDGE QUARRY AS SHOWN ON SHEET 26.
	20358	1	EACH	REMOVE EXCAVATED CULVERT FROM FOREST SERVICE LAND AND DISPOSE IN LEGAL MANNER.
3.17	15755	1	EACH	DEWATER SITE.
	20401	28	CUBIC YARD*	EXCAVATE TRENCH TO REMOVE EXISTING CMP AND FOR INSTALLATION OF NEW CMP.
	60276A	46	FOOT	INSTALL 24-IN ALUMINIZED CORRUGATED STEEL PIPE.
	32232	10	CUBIC YARD*	PLACE 4" CRUSHED AGGREGATE FULL DEPTH OVER PREPARED SUBGRADE FOR 60-FT AS MARKED BY THE CO WITH 10' TAPERS ON EACH END AND A 12' TOP WIDTH. BLEND TO ADJACENT ROAD SURFACES TO PROVIDE SMOOTH TRANSITION.
	25101	3	CUBIC YARD*	HAUL AND PLACE RIPRAP FOR ARMORING INLET AND CONSTRUCTING ENERGY DISSIPATER AT OUTLET. USE GOVERNMENT SOURCE MATERIAL FROM DEVILS RIDGE QUARRY AS SHOWN ON SHEET 26.
	20358	1	EACH	REMOVE EXCAVATED CULVERT FROM FOREST SERVICE LAND AND DISPOSE IN LEGAL MANNER.
3.68				JCT. MT. MITCHELL QUARRY RIGHT. DISPOSAL AREA AS STAKED BY CONTRACTING OFFICER.
4.06				SPUR ROAD LEFT. (REFERENCE ONLY)
4.30	20464A	ALL	LUMP SUM	EXCAVATE 12-FT X 20-FT X 33-IN BELOW ASPHALT. HAUL MATERIAL TO DISPOSAL SITE.
	20701	28	SQUARE YARD	PLACE GEOTEXTILE 12-FT X 20-FT TO PROVIDE SEPARATION BETWEEN THE GRAVEL AND SOFT GROUND.
	25101	22	CUBIC YARD*	HAUL AND PLACE 12-FT X 20-FT X 29-IN PIT RUN FROM DEVILS RIDGE QUARRY.
	32232	5	CUBIC YARD*	HAUL AND PLACE 12-FT X 20-FT X 4-IN DEEP CRUSHED AGGREGATE FULL DEPTH TO FILL EXCAVATION.
4.84				JCT FOREST SERVICE ROAD 4630126. (REFERENCE ONLY)
5.00	20464B	All	LUMP SUM	EXCAVATE 6-FT X 6-FT X 33-IN BELOW ASPHALT. HAUL MATERIAL TO DISPOSAL SITE.
	25101	4	CUBIC YARD*	HAUL AND PLACE 6-FT X 6-FT X 29-IN PIT RUN FROM DEVILS RIDGE QUARRY.
	32232	1	CUBIC YARD*	HAUL AND PLACE 6-FT X 6-FT X 4-IN DEEP CRUSHED AGGREGATE FULL DEPTH TO FILL EXCAVATION.
	32232	6	CUBIC YARD*	PLACE 4" CRUSHED AGGREGATE FULL DEPTH OVER APPROVED SUBGRADE FOR 30-FT WITH 10' TAPERS ON EACH END AND A 12' TOP WIDTH. BLEND TO ADJACENT ROAD SURFACES TO PROVIDE A SMOOTH TRANSITION.
5.62				END OF PROJECT. TRUCK TURN AROUND LOCATION. END PAY ITEMS 20204, 23051, 30359.
	20253	10	EACH	FALL DANGER TREES AS MARKED BY THE CO. DIRECTIONALLY FALL TREES AWAY FROM THE ROADWAY WHEREVER POSSIBLE. LIMB TREES ONLY AS NEEDED TO ENSURE THAT TREE TRUNK IS NO MORE THAN THREE FEET ABOVE GROUND SURFACE AFTER FELLING.
	32232	600	CUBIC YARD*	SPOT ROCK AS MARKED BY CO. ROCK TO BE REPLACED OVER RECONDITIONING POT HOLED SECTIONS BETWEEN MP 4.00 AND MP 5.62.

* - Denotes Contract Quantity

FS ROAD 4635120 RECONSTRUCTION SUMMARY

MILE POST	PAY ITEM	QUANTITY	UNIT	DESCRIPTION OF WORK
0.00				BEGINNING OF PROJECT. JUNCTION WITH FOREST SERVICE ROAD 4635 MILE POINT 1.08.
	15101	LUMP SUM	ALL	INCLUDES MOVING PERSONNEL, EQUIPMENT, MATERIAL, AND INCIDENTALS TO THE PROJECT AND PERFORMING ALL WORK NECESSARY BEFORE BEGINNING WORK AT THE PROJECT SITE.
	23051	2.39	MILE	BEGIN ROADSIDE BRUSHING. REFER TO THE BRUSHING TYPICAL SHEET 25. APPLY GOVERNMENT PROVIDED SEED AND CONTRACTOR PRODUCED MULCH TO ALL DISTURBED AREAS.
	30359	2.39	MILE	BEGIN ROADWAY RECONDITIONING. HAUL MATERIAL FROM SLOUGH AND SLIDE REMOVAL TO DISPOSAL AREA. SCARIFY MINIMUM 1" BELOW THE DEPTH OF ALL POTHOLES WASHBOARDS OR SURFACE IRREGULARITIES. CLEAN CULVERTS AS SPECIFIED IN THE SPECIFICATIONS.
	63501	ALL	LUMP SUM	INCLUDES ALL NECESSARY LABOR AND MATERIALS.
0.02				JUNCTION SPUR ROAD RIGHT. (REFERENCE ONLY)
0.10				JUNCTION SPUR ROAD/LANDING/DISPERSED CAMPSITE. (REFERENCE ONLY)
0.24	32232	10	CUBIC YARD*	HAUL AND PLACE 4" CRUSHED AGGREGATE FULL DEPTH OVER APPROVED SUBGRADE FOR 50-FT AS MARKED BY THE CO WITH 10' TAPERS ON EACH END AND A 12' TOP WIDTH. BLEND TO ADJACENT ROAD SURFACES TO PROVIDE SMOOTH TRANSITION.
0.29	32232	10	CUBIC YARD*	HAUL AND PLACE 4" CRUSHED AGGREGATE FULL DEPTH OVER APPROVED SUBGRADE FOR 50-FT AS MARKED BY THE CO WITH 10' TAPERS ON EACH END AND A 12' TOP WIDTH. BLEND TO ADJACENT ROAD SURFACES TO PROVIDE SMOOTH TRANSITION.
0.38	32232	18	CUBIC YARD*	HAUL AND PLACE 4" CRUSHED AGGREGATE FULL DEPTH OVER APPROVED SUBGRADE FOR 120-FT AS MARKED BY THE CO WITH 10' TAPERS ON EACH END AND A 12' TOP WIDTH. BLEND TO ADJACENT ROAD SURFACES TO PROVIDE SMOOTH TRANSITION.
0.42	20401	6	CUBIC YARD*	EXCAVATE AND REMOVE 25-FT X 12-FT X 4-IN AND TAKE TO DISPOSAL SITE.
	32232	6	CUBIC YARD*	HAUL AND PLACE TO FILL 25-FT X 12-FT X 4-IN CRUSHED AGGREGATE FULL DEPTH TO FILL WASHOUT AS MARKED BY THE CO. BLEND TO ADJACENT ROAD SURFACES TO PROVIDE SMOOTH TRANSITION.
0.46	32232	130	CUBIC YARD*	HAUL AND PLACE 4" CRUSHED AGGREGATE FULL DEPTH OVER APPROVED SUBGRADE FOR 876-FT AS MARKED BY THE CO WITH 10' TAPERS ON EACH END AND A 12' TOP WIDTH. BLEND TO ADJACENT ROAD SURFACES TO PROVIDE SMOOTH TRANSITION.
0.66	32232	26	CUBIC YARD*	HAUL AND PLACE 4" CRUSHED AGGREGATE FULL DEPTH OVER APPROVED SUBGRADE FOR 178-FT AS MARKED BY THE CO WITH 10' TAPERS ON EACH END AND A 12' TOP WIDTH. BLEND TO ADJACENT ROAD SURFACES TO PROVIDE SMOOTH TRANSITION.
0.73	32232	10	CUBIC YARD*	HAUL AND PLACE 4" CRUSHED AGGREGATE FULL DEPTH OVER APPROVED SUBGRADE FOR 50-IN AS MARKED BY THE CO WITH 10' TAPERS ON EACH END AND A 12' TOP WIDTH. BLEND TO ADJACENT ROAD SURFACES TO PROVIDE SMOOTH TRANSITION.
0.77	32232	26	CUBIC YARD*	HAUL AND PLACE 4" CRUSHED AGGREGATE FULL DEPTH OVER APPROVED SUBGRADE FOR 178-FT AS MARKED BY THE CO WITH 10' TAPERS ON EACH END AND A 12' TOP WIDTH. BLEND TO ADJACENT ROAD SURFACES TO PROVIDE SMOOTH TRANSITION.
0.93				SPUR ROAD LEFT UN-MARKED. (REFERENCE ONLY)
0.97	32232	42	CUBIC YARD*	HAUL AND PLACE 4" CRUSHED AGGREGATE FULL DEPTH OVER APPROVED SUBGRADE 266-FT AS MARKED BY THE CO WITH 10' TAPERS ON EACH END AND A 12' TOP WIDTH. BLEND TO ADJACENT ROAD SURFACES TO PROVIDE SMOOTH TRANSITION.
1.20	32232	158	CUBIC YARD*	HAUL AND PLACE 4" CRUSHED AGGREGATE FULL DEPTH OVER APPROVED SUBGRADE 1040-FT AS MARKED BY THE CO WITH 10' TAPERS ON EACH END AND A 12' TOP WIDTH. BLEND TO ADJACENT ROAD SURFACES TO PROVIDE SMOOTH TRANSITION.
1.29	32232	10	CUBIC YARD*	PLACE 4" CRUSHED AGGREGATE FULL DEPTH OVER APPROVED SUBGRADE FOR 50-FT AS MARKED BY THE CO. BLEND TO ADJACENT ROAD SURFACES TO PROVIDE SMOOTH TRANSITION.
1.68	32232	34	CUBIC YARD*	HAUL AND PLACE 4" CRUSHED AGGREGATE FULL DEPTH OVER APPROVED SUBGRADE FOR 220-FT AS MARKED BY THE CO. BLEND TO ADJACENT ROAD SURFACES TO PROVIDE SMOOTH TRANSITION.
1.69				PROPOSED DISPOSAL SITE. (AS STAKED BY CO.)
1.79	32232	10	CUBIC YARD*	HAUL AND PLACE 4" CRUSHED AGGREGATE FULL DEPTH OVER APPROVED SUBGRADE FOR 50' AS MARKED BY THE CO. BLEND TO ADJACENT ROAD SURFACES TO PROVIDE SMOOTH TRANSITION.
1.94	32232	10	CUBIC YARD*	HAUL AND PLACE 4" CRUSHED AGGREGATE FULL DEPTH OVER APPROVED SUBGRADE FOR 50' AS MARKED BY THE CO. BLEND TO ADJACENT ROAD SURFACES TO PROVIDE SMOOTH TRANSITION.
2.39	32232	42	CUBIC YARD*	HAUL AND PLACE 4" CRUSHED AGGREGATE FULL DEPTH OVER APPROVED SUBGRADE FOR 266' AS MARKED BY THE CO. BLEND TO ADJACENT ROAD SURFACES TO PROVIDE SMOOTH TRANSITION.
				END OF PROJECT. END PAY ITEMS 23051, 30359.
	20253	5	EACH	FALL DANGER TREES AS MARKED BY THE CO. DIRECTIONALLY FALL TREES AWAY FROM THE ROADWAY WHEREVER POSSIBLE. LIMB TREES ONLY AS NEEDED TO ENSURE THAT TREE TRUNK IS NO MORE THAN THREE FEET ABOVE GROUND SURFACE AFTER FELLING.
	32232	262	CUBIC YARD*	FROM MILE POINT 0.00 TO 2.39 ADD SPOT ROCK AS MARKED BY CO.

* - DENOTES CONTRACT QUANTITY

PACIFIC NORTHWEST REGION

PROJECT LAKE TIMBER SALE

SHEET RECONSTRUCTION SUMMARIES - NFSR 4635000 & 4635120

U.S.D.A. FOREST SERVICE

SHEET 6 SHEETS 26

FS ROAD 5700000 RECONSTRUCTION SUMMARY

MILE POST	PAY ITEM	QUANTITY	UNIT	DESCRIPTION
0.00				JUNCTION WITH FOREST SERVICE ROAD 46 AT MILE POST 0.01.
	15101	ALL	LUMP SUM	INCLUDES MOVING PERSONNEL, EQUIPMENT, MATERIAL, AND INCIDENTALS TO THE PROJECT AND PERFORMING ALL WORK NECESSARY BEFORE BEGINNING WORK AT THE PROJECT SITE.
0.01	63501	ALL	LUMP SUM	TEMPORARY TRAFFIC CONTROL INCLUDES ALL NECESSARY LABOR AND MATERIALS.
	30359A	4.97	MILE	ROADWAY RECONDITIONING, ASPHALT SURFACE, MECHANICAL BROOM.
	63401A	9.94	MILE	APPLY TYPE B (CONVENTIONAL TRAFFIC PAINT) TWO 4" DOUBLE YELLOW MARKINGS MATCHING EXISTING. ALL 30359A WORK SHALL BE COMPLETED PRIOR TO PAVEMENT MARKINGS.
	63401B	9.94	MILE	APPLY TYPE B (CONVENTIONAL TRAFFIC PAINT) 4" WHITE EDGE (FOG) LINE MATCHING EXISTING. ALL 30359A WORK SHALL BE COMPLETED PRIOR TO PAVEMENT MARKINGS
4.97				END OF PROJECT JUNCTION WITH 5720 ROAD.

FS ROAD 5720000 RECONSTRUCTION SUMMARY

MILE POST	PAY ITEM	QUANTITY	UNIT	DESCRIPTION
0.00				JUNCTION WITH FOREST SERVICE ROAD 57 AT MILE POST 4.97.
	15101	ALL	LUMP SUM	INCLUDES MOVING PERSONNEL, EQUIPMENT, MATERIAL, AND INCIDENTALS TO THE PROJECT AND PERFORMING ALL WORK NECESSARY BEFORE BEGINNING WORK AT THE PROJECT SITE.
	15201	ALL	LUMP SUM	RESPONSIBLE FOR ALL REQUIRED CONSTRUCTION SURVEYS.
	15713	ALL	LUMP SUM	BEGIN INSTALLATION OF CHECK DAM(S) UPSTREAM FROM EACH CULVERT INLET AFTER COMPLETION OF 30359.
	30304	2.70	MILE	BEGIN DITCH RECONDITIONING. GRUBBING & DISPOSAL OF ALL VEGETATION & ROOT MASSES WITHIN ROAD SHOULDER AND IN THE DITCH IS REQUIRED UNLESS OTHERWISE NOTED IN THE WORK DESCRIPTION. HAUL MATERIAL FROM SLOUGH AND SLIDE REMOVAL TO DISPOSAL AREA. APPLY GOVERNMENT PROVIDED SEED AND CONTRACTOR PRODUCED MULCH TO ALL DISTURBED AREAS.
	30359A	2.70	MILE	MACHINE BROOM SWEEP AND CLEANING THE EXISTING ROAD SURFACE OF ALL LOOSE MATERIAL, DIRT, OR OTHER DELETERIOUS SUBSTANCES.
	63501	ALL	MILE	INSTALL TEMPORARY TRAFFIC CONTROL. INCLUDES ALL NECESSARY LABOR AND MATERIALS.
0.59				JUNCTION RIGHT 5720120.
0.89				SPUR LEFT UN-MARKED.
1.18	20359	90	SQUARE YARD	SAW CUT ASPHALT 58-FT BY 14-FT AS MARKED BY THE CO.
	20401	96	CUBIC YARD*	EXCAVATION FOR FILL REPAIR TYPE C SEE SHEET 14.
	20965	52	CUBIC YARD*	BACKFILL MATERIAL - SUB-BASE WITH 1-1/2" MINUS FROM STOCK PILE AT DEVIL'S RIDGE AS SHOWN ON SHEET 26.
	26201	205	SQUARE YARD	WORK INCLUDES GEOGRID, FACING WRAP, AND FORMING BASKET AS SHOWN ON SHEET 15. FABRIC OVERLAP IS INDIRECT TO THIS PAY ITEM.
	32232	52	CUBIC YARD*	HAUL AND PLACE 9" CRUSHED AGGREGATE BASE FULL DEPTH OVER COMPACTED PIT RUN AS MARKED BY THE CO. AFTER PAVING PLACE SHOULDER ROCK AS SHOWN ON SHEET 13.
	40451	25.0	TON	PLACE 3" HOT MIX ASPHALT OVER APPROVED AGGREGATE BASE AT FILL REPAIR SITE. PLACE 2 SKIN PATCHES TO DIMENSIONS SHOWN ON PLAN SHEET, AS MARKED BY CO.
	63307	3	EACH	INSTALL 3 CARSONITES AS STAKED BY CO. ACCORDING TO THE MUTCD SECTION 3D.03 AS MARKED BY THE CO.
1.21				SPUR ROAD RIGHT UN-MARKED.
1.30				DISPOSAL AREA AS STAKED BY CO.
1.37				JUNCTION FOREST SERVICE ROAD 5720140.
2.05	20359	4	SQUARE YARD	SAW CUT AND REMOVE 6-FT X 6-FT ASPHALT AS MARKED BY THE CO.
	20464C	All	LUMP SUM	EXCAVATE 6-FT X 6-FT X 1-FT BELOW ASPHALT. HAUL EXCESS MATERIAL TO DISPOSAL SITE.
	32232	2	CUBIC YARD*	HAUL AND PLACE 6-FT X 6-FT X 1-FT CRUSHED AGGREGATE FULL DEPTH TO FILL EXCAVATION AS MARKED BY THE CO.
	40451	0.7	TON	PLACE 3-IN ASPHALT.
2.18	15755	1	EACH	DEWATERING SITE.
	20401	560	CUBIC YARD*	REMOVE EXISTING CMP AND PREPARE TRENCH FOR THE INSTALLATION OF NEW CMP. AS SHOWN ON SHEET 18.
	32222	140	CUBIC YARD*	HAUL AND PLACE PIT RUN MATERIAL FOR BACKFILL SUB-BASE.
	60276C	70	FOOT	INSTALL 48-IN ALUMINIZED CORRUGATED STEEL PIPE.
	32232	65	CUBIC YARD*	PLACE 9" CRUSHED AGGREGATE BASE FULL DEPTH OVER COMPACTED PIT RUN AS MARKED BY THE CO. AFTER PAVING PLACE SHOULDER ROCK AS SHOWN ON DRAWINGS.
	25101	3	CUBIC YARD*	HAUL AND PLACE RIPRAP FOR ARMORING INLET/ENERGY DISSIPATER AT OUTLET. GOVERNMENT SOURCE IS DEVILS RIDGE QUARRY AS SHOWN ON 26.
	20358	1	EACH	REMOVE EXCAVATED CULVERT FROM FOREST SERVICE LAND AND DISPOSE IN LEGAL MANNER.
	40451	52.0	TON	PLACE 3" HOT MIX ASPHALT OVER APPROVED BASE.
2.70				END OF PROJECT. END 30304 AND 30359A.
	20253	15	EACH	FALL DANGER TREES AS MARKED BY THE CO. DIRECTIONALLY FALL TREES AWAY FROM THE ROADWAY WHEREVER POSSIBLE. LIMB TREES ONLY AS NEEDED TO ENSURE THAT TREE TRUNK IS NO MORE THAN THREE FEET ABOVE GROUND SURFACE AFTER FELLING.

* - DENOTES CONTRACT QUANTITY

DRAINAGE LISTING

ROAD NUMBER & MILEPOST OR STATION	DESIGNED: CORRUGATED METAL PIPE: DIAMETER (INCHES)	DESIGNED: CORRUGATED METAL PIPE: THICKNESS (INCHES)	DESIGNED: CORRUGATED METAL PIPE: LENGTH (FEET)	DESIGNED: CORRUGATED METAL SPILLWAY: DIAMETER (INCHES)	DESIGNED: CORRUGATED METAL SPILLWAY: LENGTH (FEET)	DESIGNED: CORRUGATED METAL SPILLWAY: FULL CIRCLE	DESIGNED: CORRUGATED METAL SPILLWAY: HALF ROUND	INSTALLATION DETAILS: GRADE %	INSTALLATION DETAILS: SKEW °	INSTALLATION DETAILS: ANCHOR ASSEMBLY	INSTALLATION DETAILS: TYPE	RIPRAP - CY: HAND PLACED: INLET - CY	RIPRAP - CY: HAND PLACED: OUTLET - CY	RIPRAP - CY: MACHINE PLACED: INLET - CY	RIPRAP - CY: MACHINE PLACED: OUTLET - CY*	RIPRAP - CY: DUMPED: INLET - CY	RIPRAP - CY: DUMPED: OUTLET - CY	REMARKS
RD 4630170 M.P. 0.47	24	0.109	36					#	#		3				3			REMOVE AND REPLACE CULVERT
RD 4630170 M.P. 0.57	36	0.138	40					5	90		3				3			NEW CULVERT INSTALL
RD 4630170 M.P. 0.65	66 x 51	0.168	40					#	#		3				11			REMOVE AND REPLACE CULVERT
RD 4635000 M.P. 2.66	24	0.109	34					#	#		3				3			REMOVE AND REPLACE CULVERT
RD 4635000 M.P. 3.17	24	0.109	46					#	30		3				3			REMOVE AND REPLACE CULVERT
RD 5720000 M.P. 2.18	48	0.168	70					#	#		3				3			REMOVE AND REPLACE CULVERT

NOTE: STANDARD PIPE CORRUGATION WILL BE 2-2/3" X 1/2" UNLESS OTHERWISE NOTED.

= MATCH EXISTING

SOME INSTALLATIONS OF CULVERTS MAY REQUIRE ADDITIONAL EXCAVATION BELOW GRADE LINE TO ACHIEVE MINIMUM 1 FOOT COVER MATERIAL REQUIREMENT (SEE NOTE #17 ON GENERAL NOTES SHEET).

ALL CULVERT INSTALLS SHALL MEET A MINIMUM GRADE OF 5% UNLESS OTHERWISE STATED.

ALL PIPES REQUIRE GASKETS AND BANDS. ALL NECESSARY HARDWARE ARE INDIRECT TO 60262, 60276A, 60276B, 60276C PAY ITEMS

RIPRAP PLACEMENT SPLASH APRONS MAY REQUIRE SOME HAND PLACEMENT.

FOR CULVERT REPLACEMENT OR INSTALLATIONS WITHIN STREAMS OR ANY ACTIVELY FLOWING CHANNEL :

1. ALL CONSTRUCTION WORK TO TAKE PLACE WITHIN THE STREAM OR HAVE A DIRECT EFFECT ON THE STREAM SHALL TAKE PLACE WITHIN THE PRESCRIBED OREGON DEPARTMENT OF FISH AND WILDLIFE IN-STREAM WORK WINDOW FOR THE WATERSHED (JULY 15 TO AUGUST 31).
2. ALL WATER FEATURES AND RELATED NATURAL RESOURCES ARE TO BE KEPT FREE OF DEPOSITS OR DISCHARGES OF SOIL, SEDIMENT, OR CONSTRUCTION RELATED MATERIAL FROM THE CONSTRUCTION SITE.
3. CONTINUOUS STREAM FLOW MUST BE MAINTAINED DOWNSTREAM OF THE INSTALLATION SITE. REPLACEMENTS WITHIN STREAMS THAT HAVE INTERMITTENT FLOW SHOULD OCCUR ONLY WHEN THE STREAM IS NOT FLOWING.
4. FOR CULVERT REPLACEMENTS, COMPLETELY EXCAVATE ALL MATERIAL FROM OVER AND AROUND THE PIPE TO ALL PRACTICABLE EXTENTS PRIOR TO EXTRACTING THE EXISTING CULVERT. STOCKPILE EXCAVATED SPOILS AT AN APPROVED LOCATION AWAY FROM THE STREAM AND IMPLEMENT EROSION CONTROL MEASURES AROUND STOCKPILE LOCATION.
5. THE CO MAY MONITOR THE STREAM FOR TURBIDITY DURING CONSTRUCTION OPERATIONS AND MAY STOP CONSTRUCTION ACTIVITIES AT ANY TIME DUE TO OBSERVED TURBIDITY IN THE STREAM.

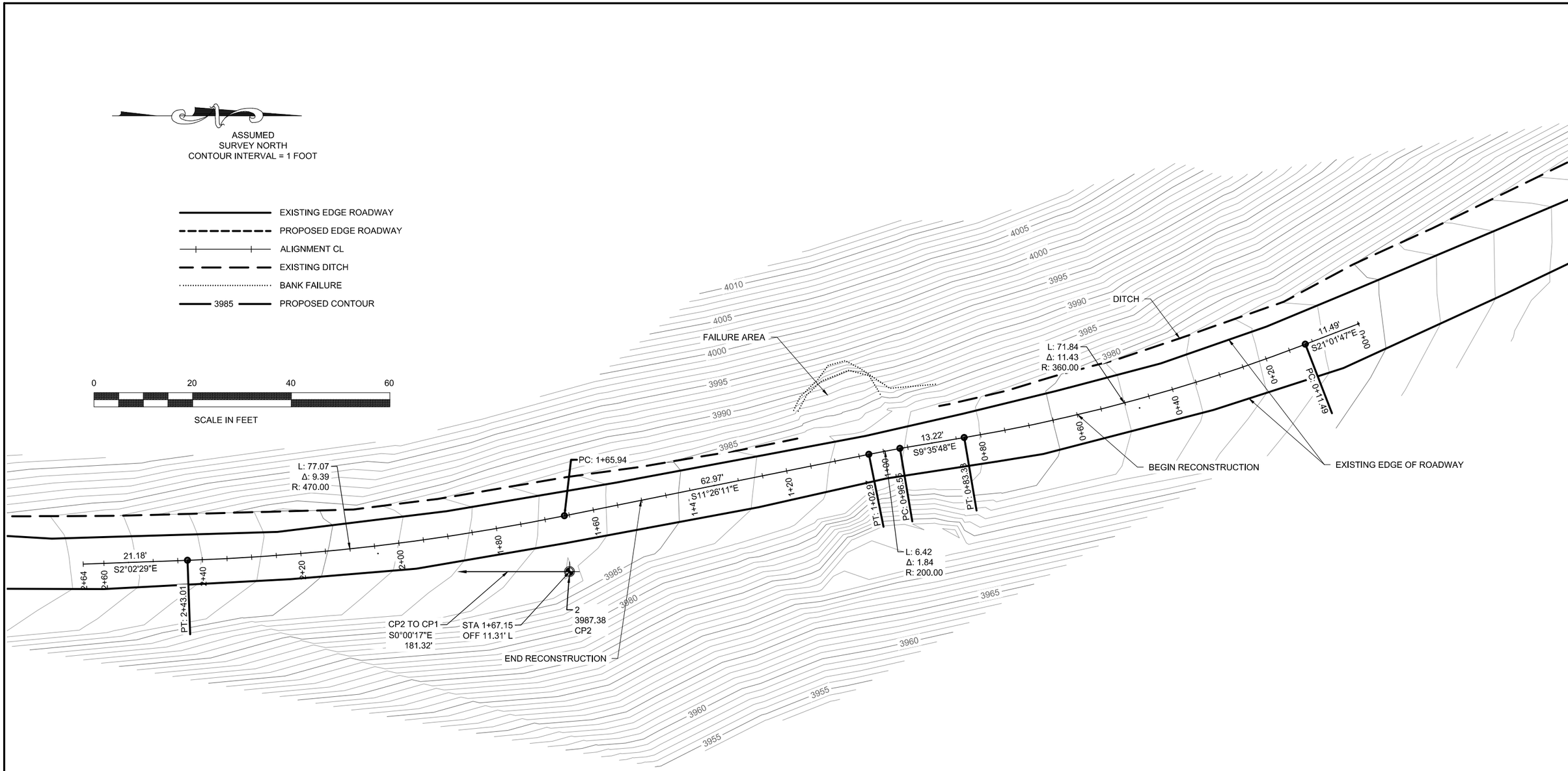

CONTROL POINT TABLE					
POINT #	NORTHING	EASTING	ELEVATION	DESCRIPTION	STA. & OFFSET
CP2	5181.31	5000.00	3987.38	HUB & TACK	STA. - 1+67.15 OFFSET - 11.31'L

CONTROL POINTS OUTSIDE OF PROJECT AREA					
POINT #	NORTHING	EASTING	ELEVATION	DESCRIPTION	STA. & OFFSET
CP1	5000.00	5000.00	4000.00	HUB & TACK	APPROX. 177.5' FROM CP2 - 9.5' L
CP3	4866.52	4800.93	4018.80	HUB & TACK	APPROX. 413' FROM CP2 - 13.6'L

PROJECT NAME
LAKE TIMBER SALE
PACIFIC NORTHWEST REGION

SHEET NAME
NFSR 463500 0 MP 2.30 EXISTING SITE PLAN
U.S.D.A. FOREST SERVICE

SHEET 9 SHEETS 26

ASSUMED
SURVEY NORTH
CONTOUR INTERVAL = 1 FOOT

EXISTING EDGE ROADWAY
PROPOSED EDGE ROADWAY
ALIGNMENT CL
EXISTING DITCH
BANK FAILURE
3985 PROPOSED CONTOUR

0 20 40 60
SCALE IN FEET

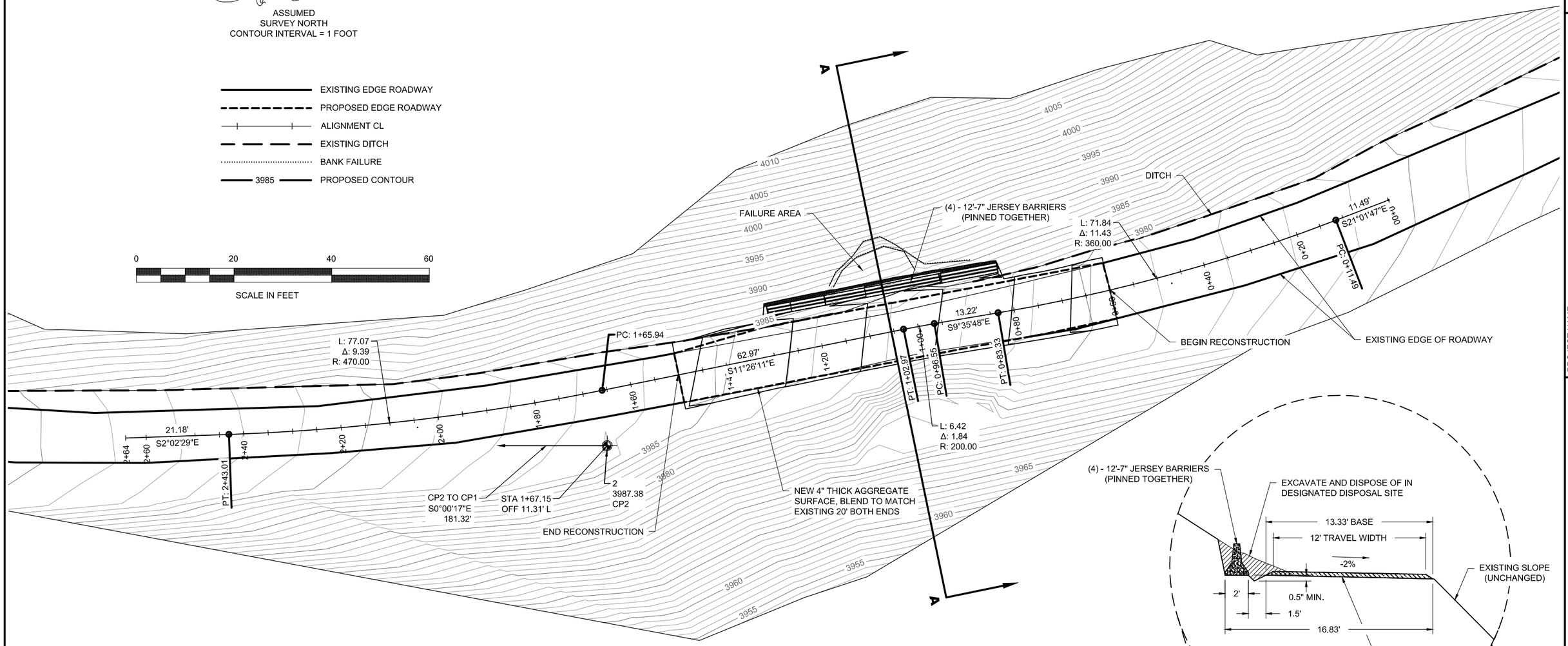

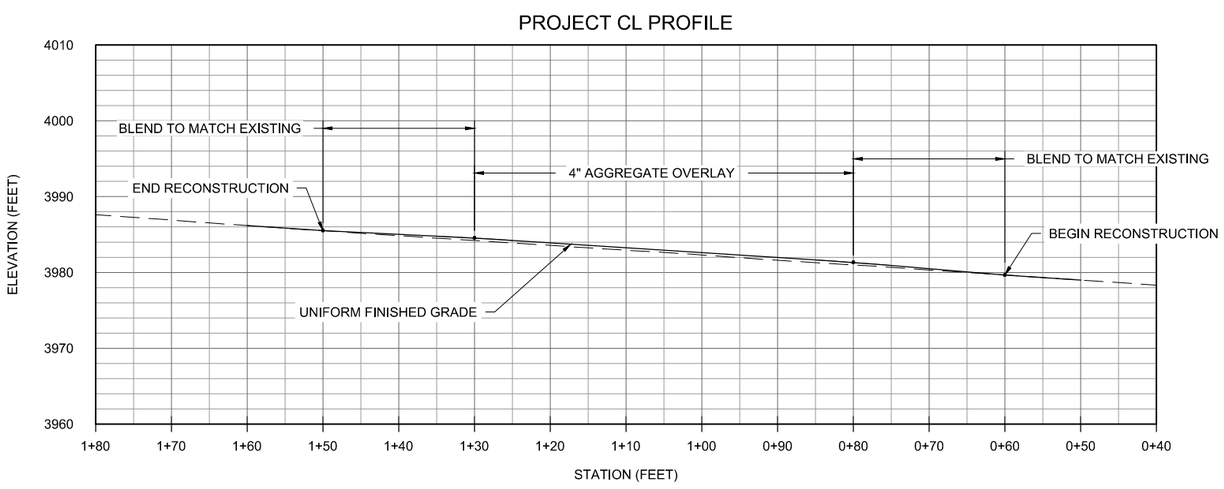

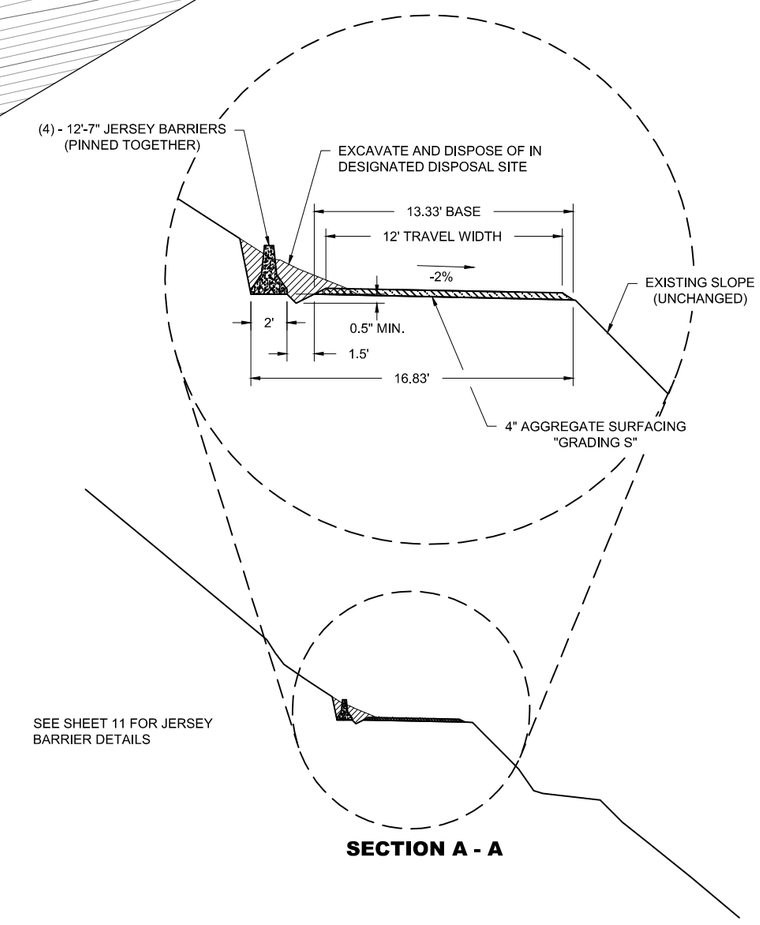

PACIFIC NORTHWEST REGION

PROJECT NAME
LAKE TIMBER SALE

SITE PLAN

SHEET NAME
NSFR 463500 MP 2.30 PROPOSED

U.S.D.A. FOREST SERVICE

SHEETS 26

SHEET 10

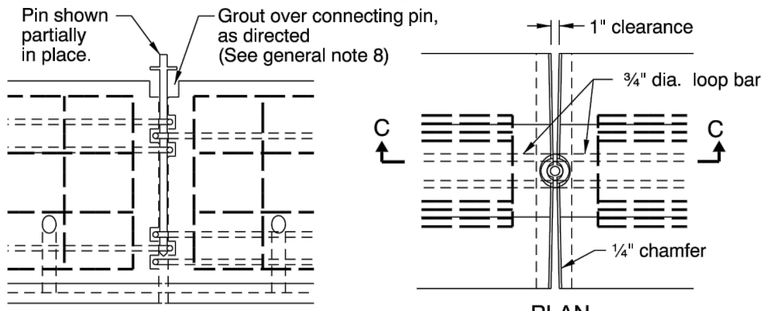

SECTION C-C

For details not shown, see End Views A-A and B-B

PLAN

For details not shown, see End Views A-A and B-B

PIN AND LOOP CONNECTION

PIN NOTES:
1. Washer shall be forged as integral part of pin or shall be welded as shown.

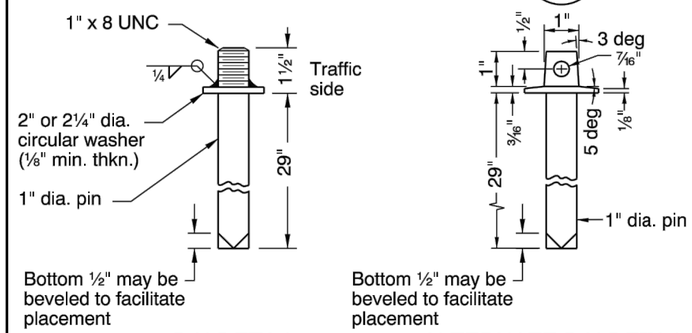

PIN DETAIL

ALTERNATE PIN DETAIL

STANDARD BARRIER PIN

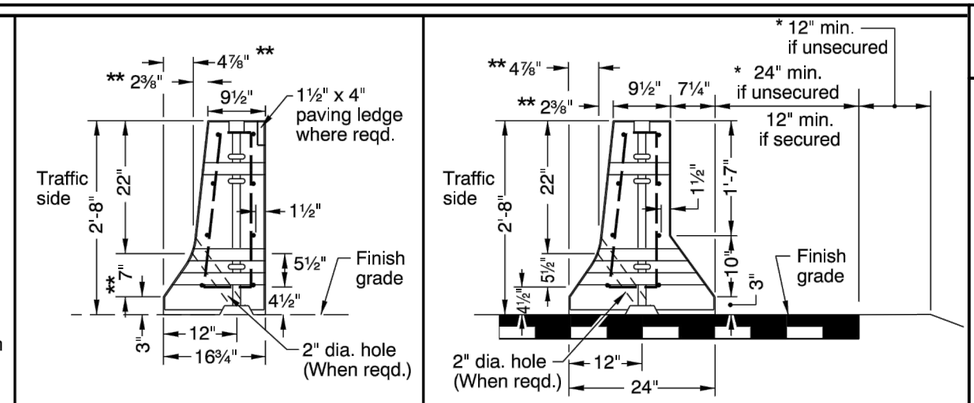

(NARROW BASE)

(WIDE BASE)

SHOULDER BARRIER

(For assembly details and dimensions, see median barrier at left)

* Barrier used as shoulder barrier and placed in areas where these dimensions cannot be obtained shall be secured to roadway

** Dimensions marked thus are to the intersection point of the barrier slopes. Construct the 10" radius to provide a smooth transition between the slopes.

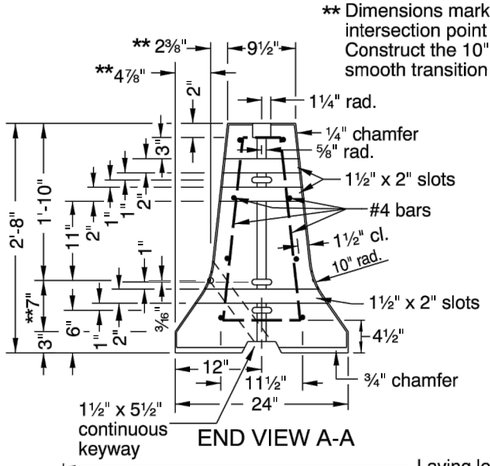

END VIEW A-A

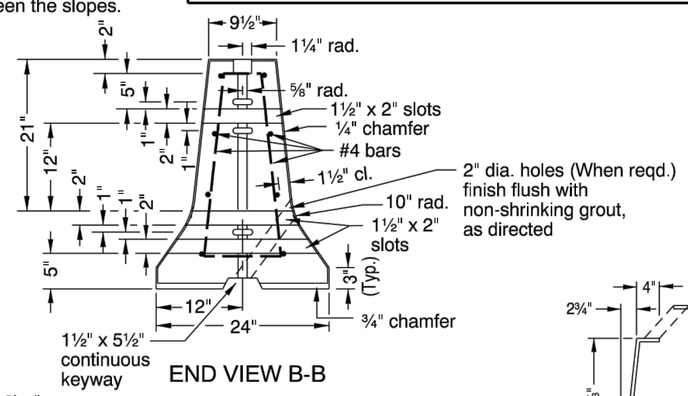

END VIEW B-B

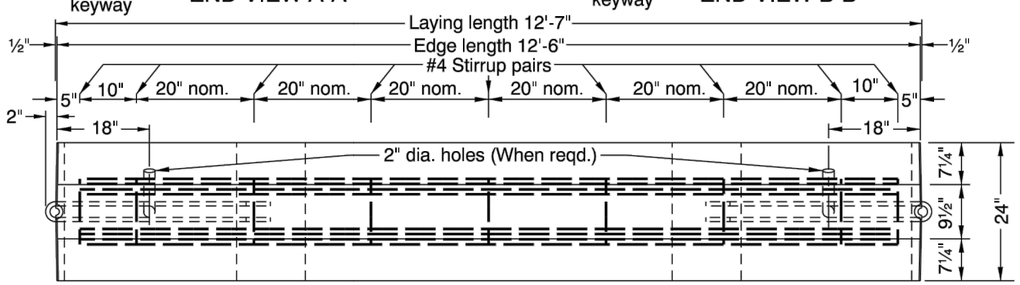

PLAN

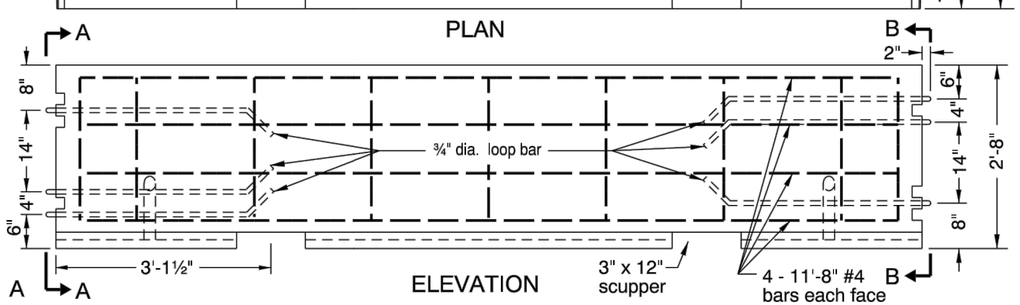

ELEVATION

MEDIAN BARRIER

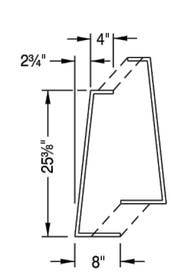

STIRRUP "M"
(MEDIAN BARRIER)
#4 Rebar

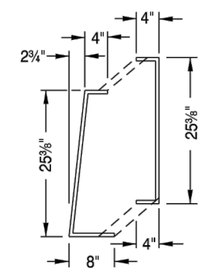

STIRRUP "S"
(SHOULDER BARRIER)
#4 Rebar

GENERAL NOTES FOR ALL DETAILS:

1. All reinforcement shall be full length as shown and shall be 2" clear of nearest face of conc., unless otherwise shown.
2. Max. chord length for curves with a 1425' radius or less shall be 12.5'. Max. chord length for curves with radii exceeding 1425' shall be 25'.
3. Normal use of precast barrier units is restricted to curvatures with radii greater than 770'.
4. Narrow base shldr. barrier to be used only at locations with backfill behind barrier as shown on plans.
5. Conc. median barrier is an acceptable alternate to wide base shldr. barrier.
6. Temp. conc. barrier to be precast conc. median barrier with pin and loop assembly.
7. When scuppers are not required, plug them with a minimum 2" of grout, as directed.
8. Conc. grout for grouting over pins, pinning holes or grouting of scuppers shall be portland cement grout, weak in strength and of thick consistency, as directed.
9. All pins, bolts, dowels, loop bars, and connectors shall be hot-dip galvanized after fabrication.

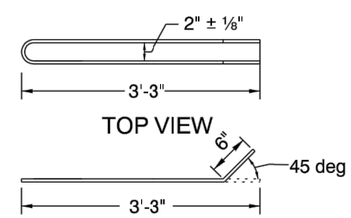

SIDE VIEW
LOOP BAR ¾" DIA.

LOOP BAR DETAIL

The selection and use of this Standard Drawing, while designed in accordance with generally accepted engineering principles and practices, is the sole responsibility of the user and should not be used without consulting a Registered Professional Engineer.

CALC. BOOK NO. N/A

BASELINE REPORT DATE 21-JUL-2015

NOTE: All material and workmanship shall be in accordance with the current Oregon Standard Specifications

OREGON STANDARD DRAWINGS

PRECAST CONCRETE BARRIER PIN AND LOOP ASSEMBLY

2015

DATE	REVISION DESCRIPTION
07-2015	REVISED NOTES

Effective Date: December 1, 2015 - May 31, 2016

RD500

PROJECT LAKE TIMBER SALE

SHEET JERSEY BARRIER DETAILS

PACIFIC NORTHWEST REGION

U.S.D.A. FOREST SERVICE

SHEETS 26

SHEET 11

CONTROL POINT TABLE					
POINT #	NORTHING	EASTING	ELEVATION	DESCRIPTION	STA. & OFFSET
CP1	5000.00	5000.00	2500.00	MAG NAIL	STA. 0+00 OFFSET 3.93'L
CP2	4883.34	4807.46	2514.06	MAG NAIL	STA. 2+25.13 OFFSET 2.55'L

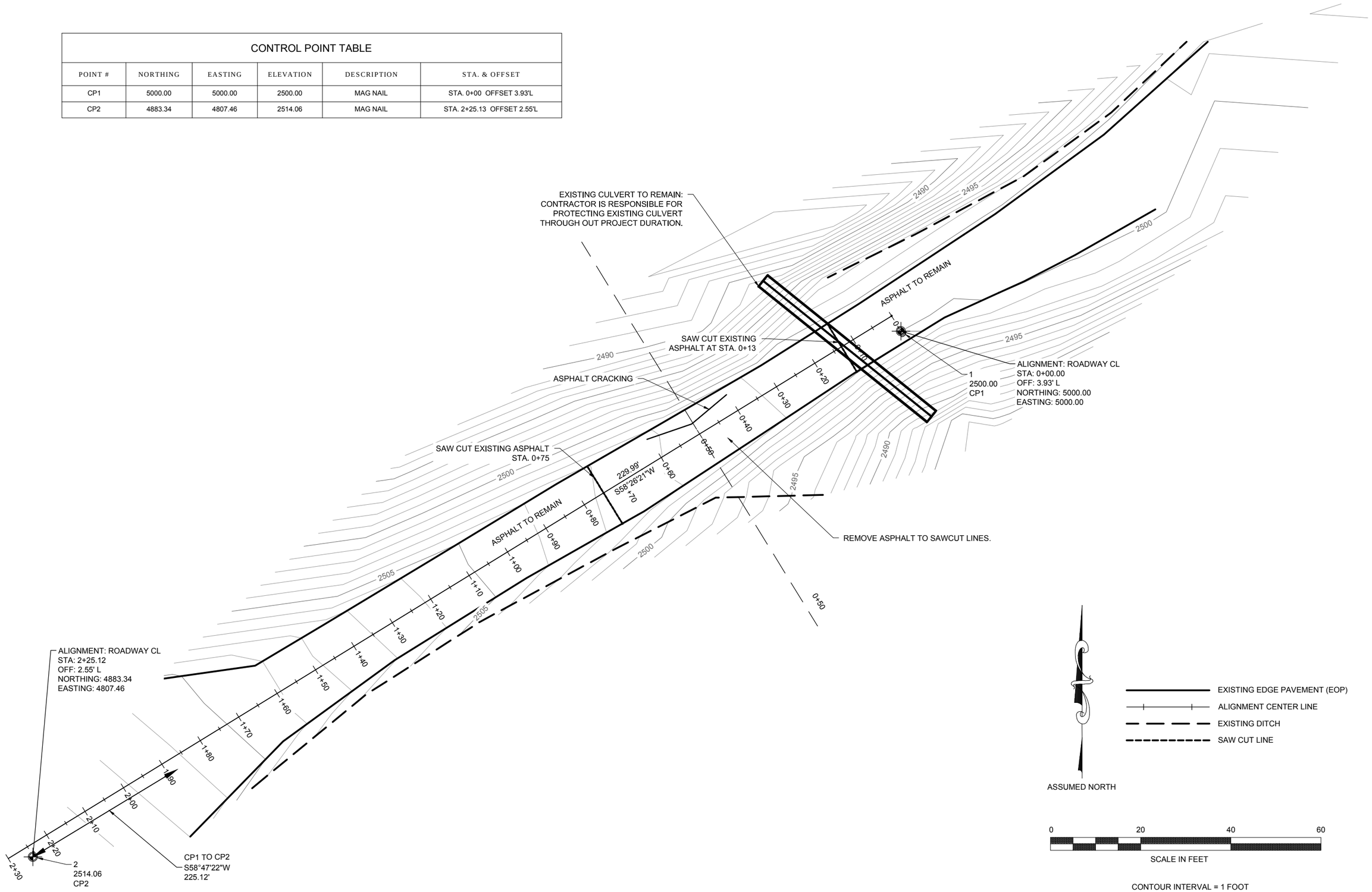

PROJECT
LAKE TIMBER SALE
PACIFIC NORTHWEST REGION

NFSR 5720000 MP 1.18 EXISTING SITE PLAN

U.S.D.A. FOREST SERVICE

SHEET 12 SHEETS 26

CONTROL POINT TABLE					
POINT #	NORTHING	EASTING	ELEVATION	DESCRIPTION	STA. & OFFSET
CP1	5000.00	5000.00	2500.00	MAG NAIL	STA. 0+01 OFFSET 3.93'L
CP2	4883.34	4807.46	2514.06	MAG NAIL	STA. 2+25.13 OFFSET 2.55'L

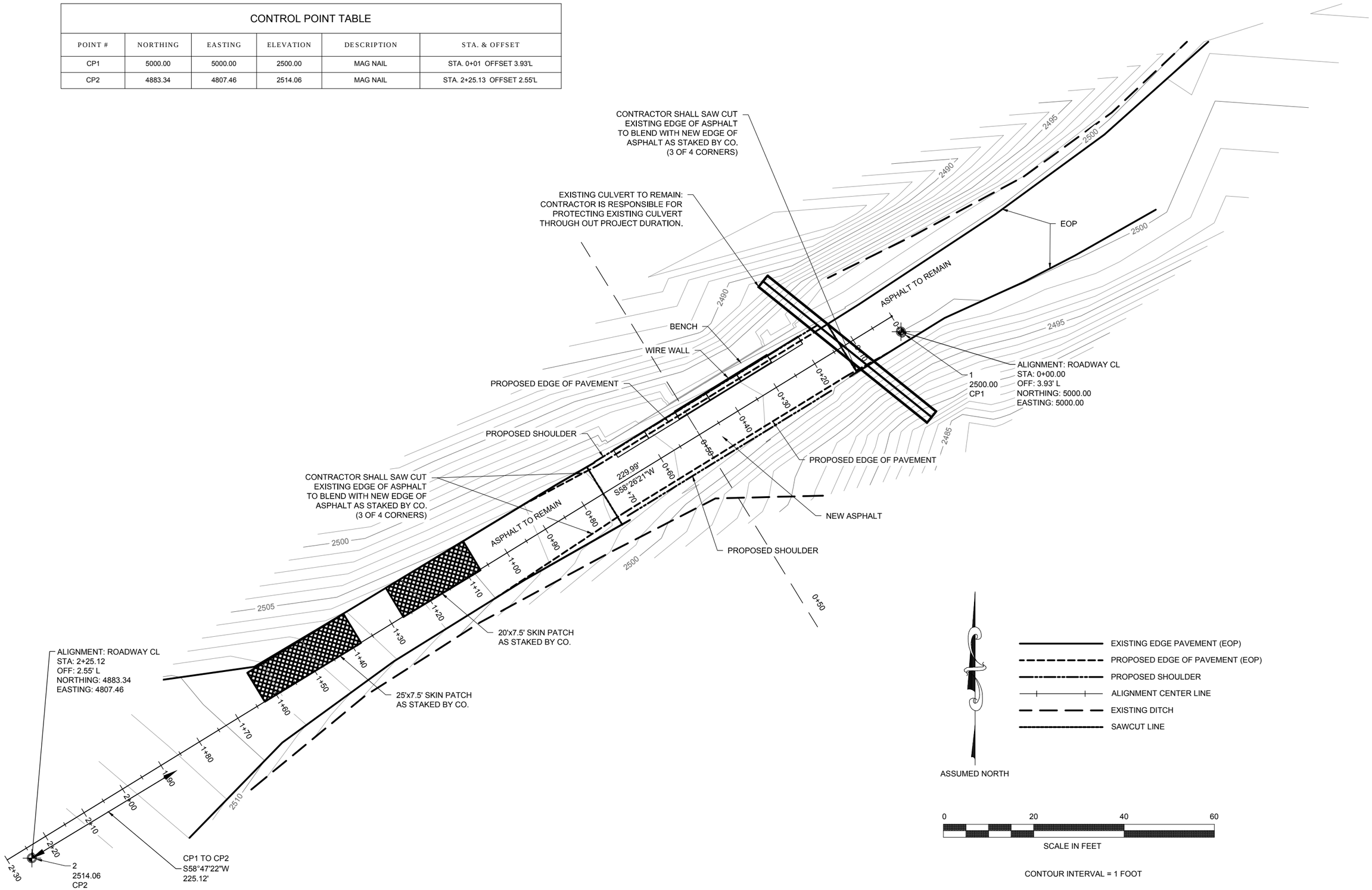

PACIFIC NORTHWEST REGION

PROJECT
LAKE TIMBER SALE

SITE PLAN

SHEET
NFSR 5720000 MP 1.18 PROPOSED

U.S.D.A. FOREST SERVICE

SHEET 13 SHEETS 26

ROADWAY CL PROFILE

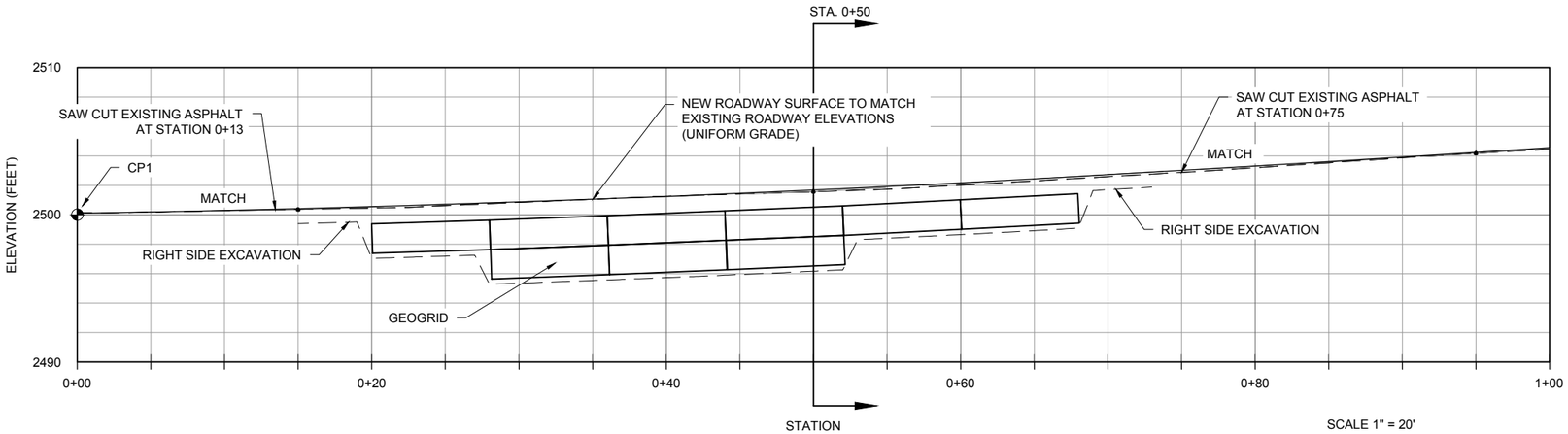

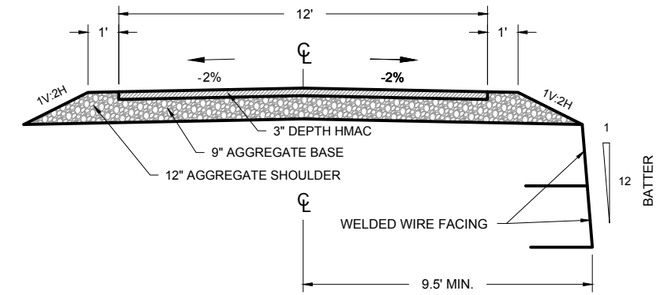

TYPICAL ROAD BED SECTION

NOT TO SCALE

SECTION 0+50.00

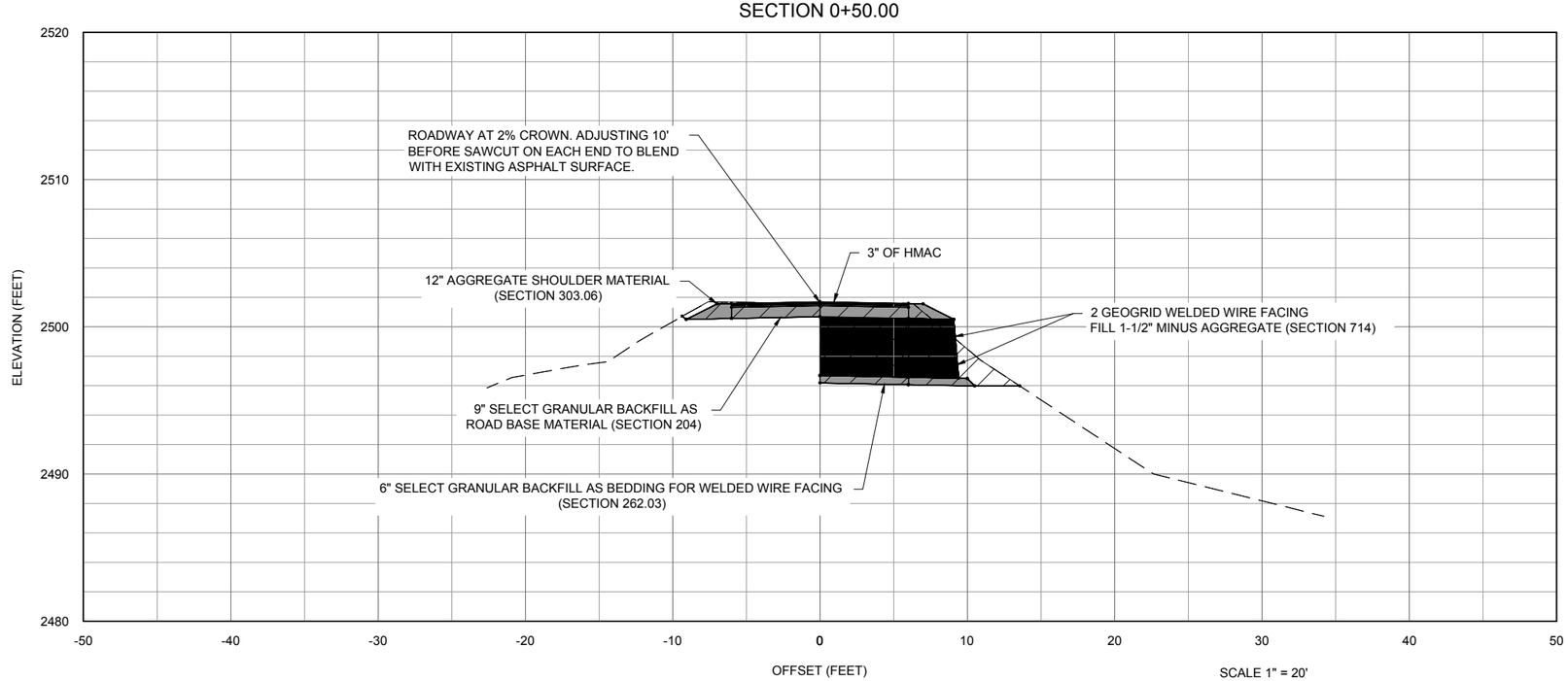

PROJECT LAKE TIMBER SALE

PACIFIC NORTHWEST REGION

PROFILE & SECTIONS

SHEET NFSR 5720000 MP 1.18 ROADWAY PROFILE

U.S.D.A. FOREST SERVICE

SHEETS 26

SHEET 14

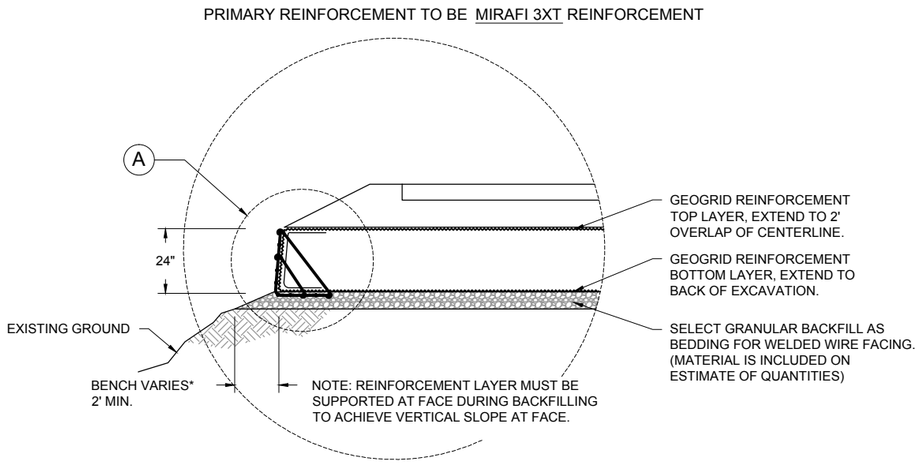

METHOD C DETAIL
SINGLE-LAYER REINFORCEMENT/WRAPPED FACE
(NOT TO SCALE)

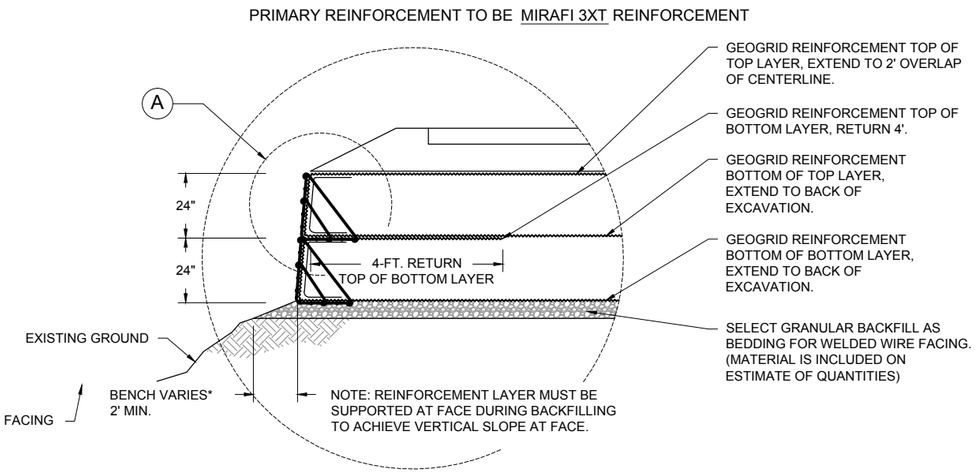

METHOD C DETAIL
DOUBLE-LAYER REINFORCEMENT/WRAPPED FACE
(NOT TO SCALE)

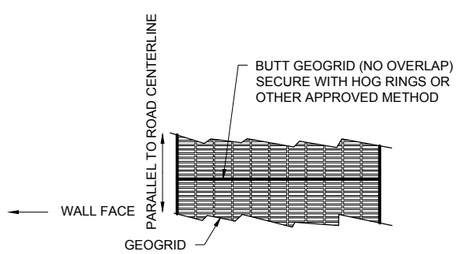

PLAN VIEW GEOGRID DETAIL

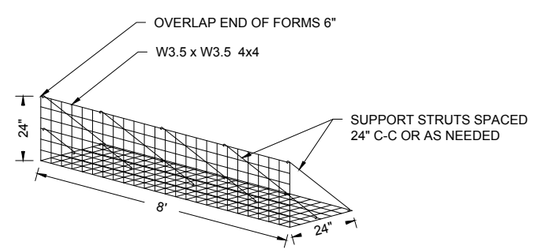

PERSPECTIVE VIEW
WELDED WIRE FORM

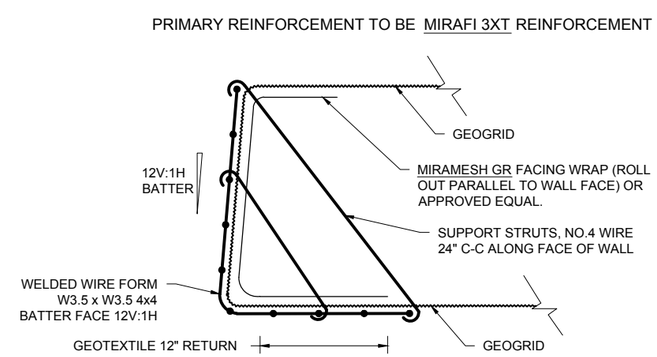

A GEOGRID & FORMING DETAIL

GEOGRID & FACING DETAILS
(NOT TO SCALE)

PROJECT
LAKE TIMBER SALE
PACIFIC NORTHWEST REGION

SHEET
NFSR 5720000 MP 1.18 WIRE WALL DETAILS
U.S.D.A. FOREST SERVICE

SHEETS 26
SHEET 15

CONTROL POINT TABLE					
POINT #	NORTHING	EASTING	ELEVATION	DESCRIPTION	STA & OFFSET
CP1	5000.00	5000.00	2500.00	MAG NAIL	STA 0+82.93 - OFFSET 6.83'R
CP2	5015.80	5087.64	2504.28	HUB & TACK	STA 1+78.24 - OFFSET 16.36'L
CP3	5122.15	4952.67	2498.36	MAG NAIL	APPROX. 130' FROM CP1 UP ROAD

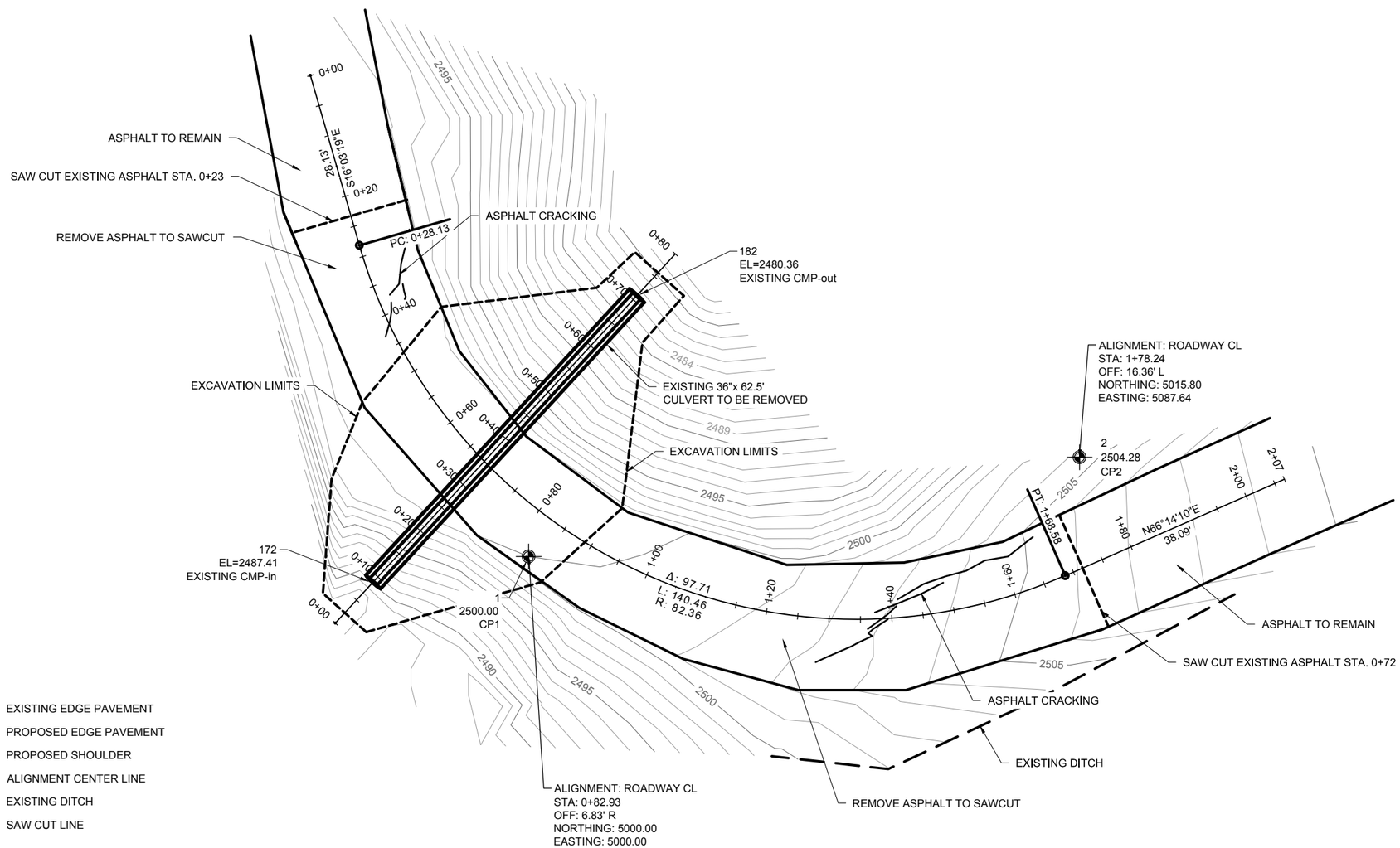

PROJECT
LAKE TIMBER SALE
PACIFIC NORTHWEST REGION

SHEET
NFSR 5720000 MP 2.18 EXISTING SITE PLAN
U.S.D.A. FOREST SERVICE

SHEETS
26

SHEET
16

CONTROL POINT TABLE					
POINT #	NORTHING	EASTING	ELEVATION	DESCRIPTION	STA & OFFSET
CP1	5000.00	5000.00	2500.00	MAG NAIL	STA 0+82.93 - OFFSET 6.83'R
CP2	5015.80	5087.64	2504.28	HUB & TACK	STA 1+78.24 - OFFSET 16.36'L
CP3	5122.15	4952.67	2498.36	MAG NAIL	APPROX. 130' FROM CP1 UP ROAD

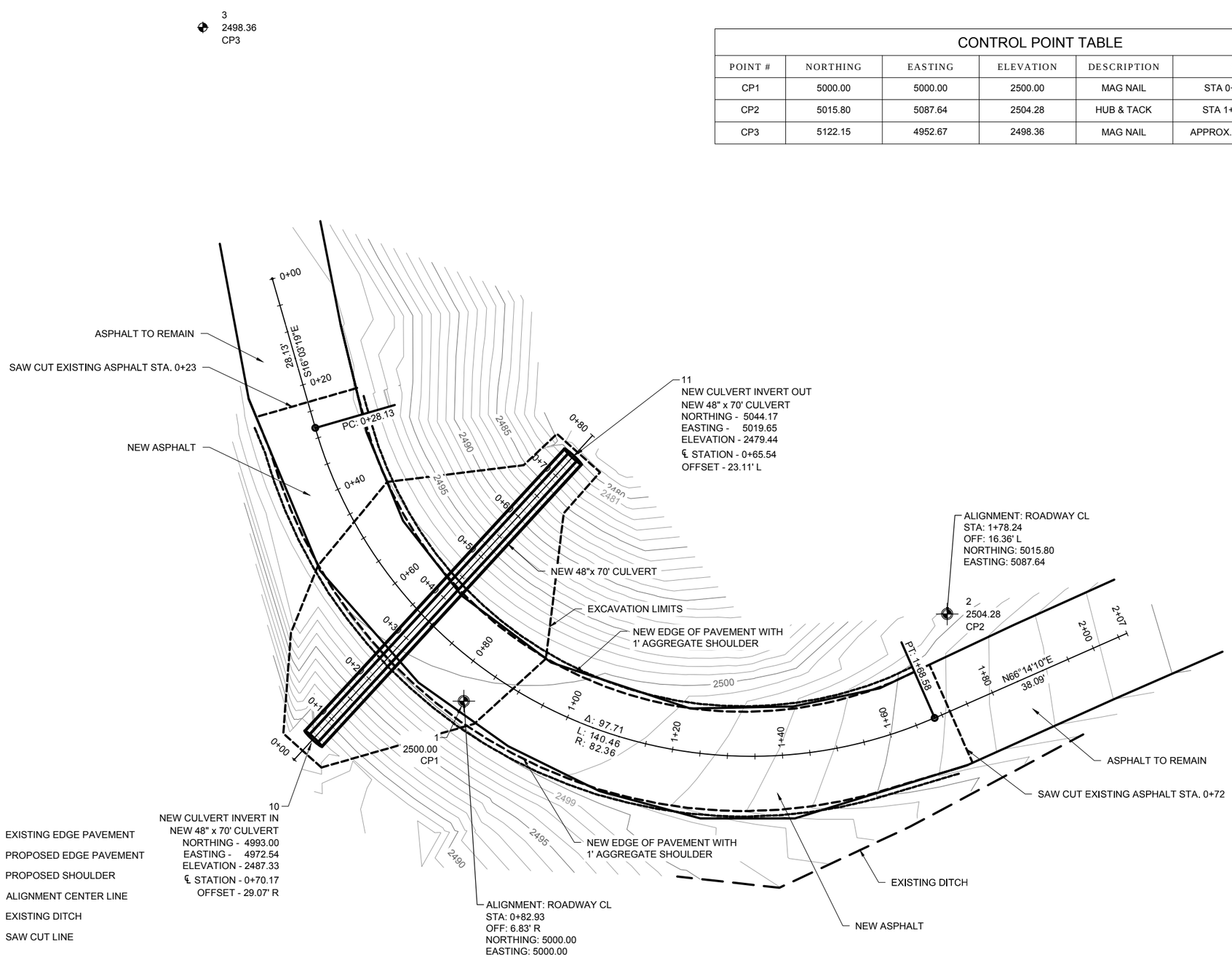

CONTOUR INTERVAL = 1 FOOT

PROJECT
LAKE TIMBER SALE
PACIFIC NORTHWEST REGION

SHEET
NFSR 5720000 MP 2.18 PROPOSED SITE PLAN
U.S.D.A. FOREST SERVICE

SHEETS
26

SHEET
17

PIPE EXCAVATION PROFILE

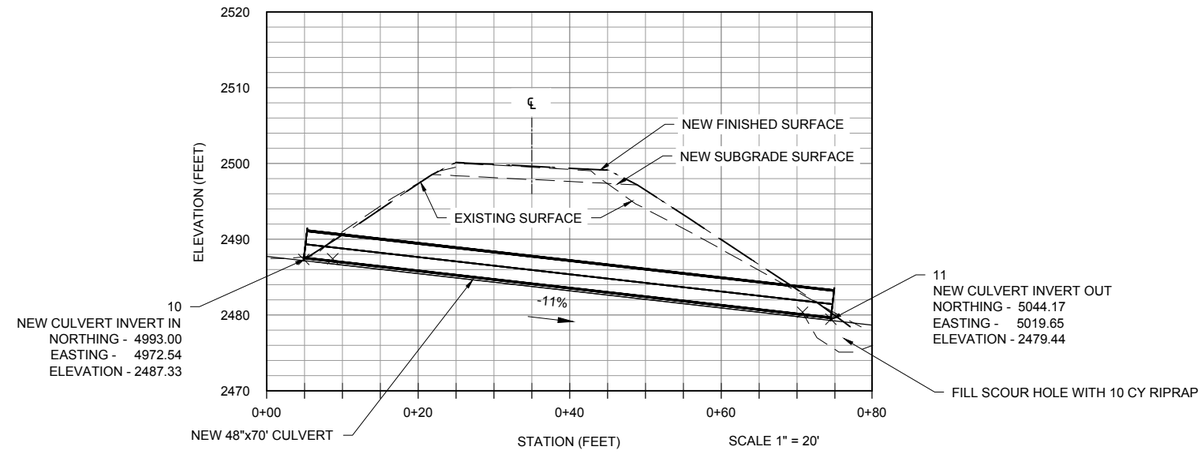

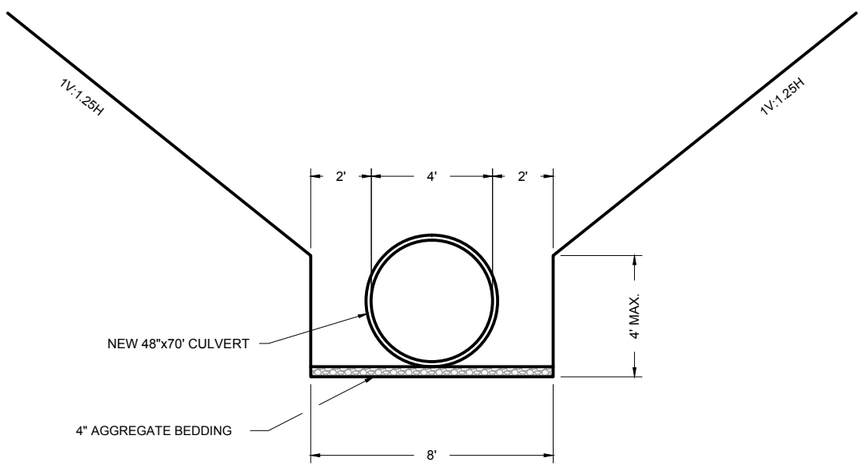

EXCAVATION SECTION VIEW TYPICAL

NOT TO SCALE

SECTION VIEW 0+40.00 CULVERT CENTER LINE ALIGNMENT

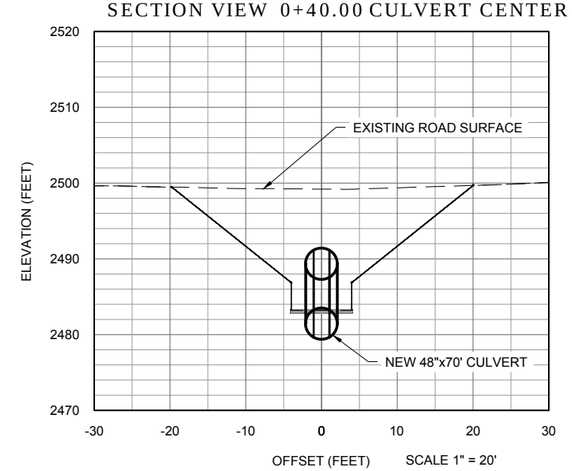

PROJECT
LAKE TIMBER SALE
PACIFIC NORTHWEST REGION

PROFILE & SECTION

SHEET
NFSR 5720000 MP 2.18 EXCAVATION PROFILE & SECTION
U.S.D.A. FOREST SERVICE

SHEET 18 SHEETS 26

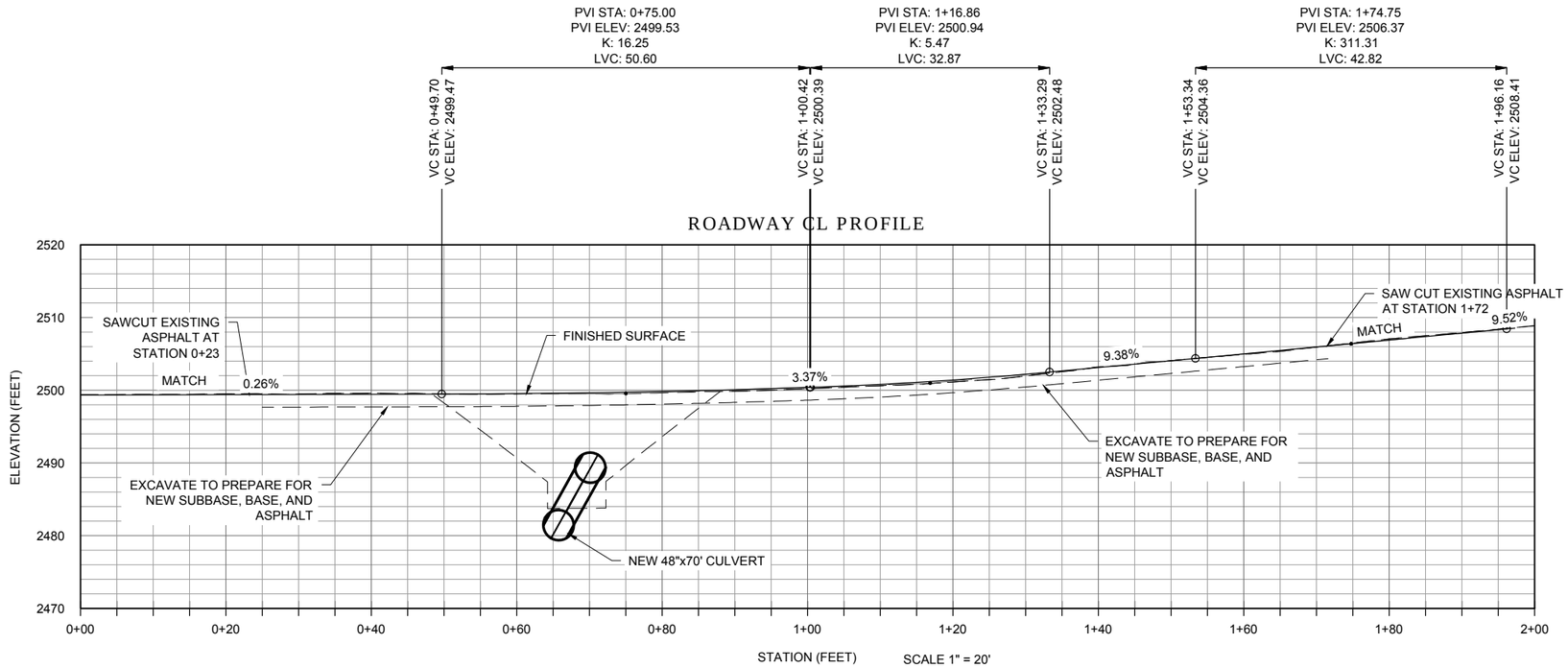

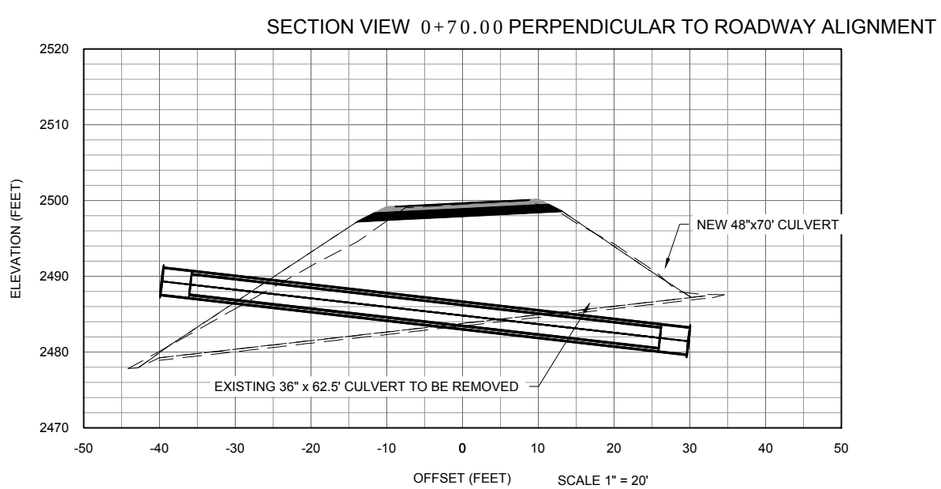

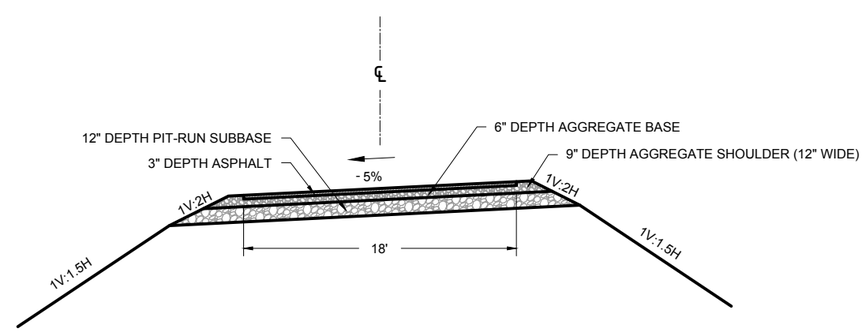

TYPICAL ROAD SECTION

STA 0+23 TO STA 0+73
NOT TO SCALE

PROJECT
LAKE TIMBER SALE
PACIFIC NORTHWEST REGION

SHEET
NFSR 5720000 MP 2.18 ROADWAY PROFILE & SECTION
U.S.D.A. FOREST SERVICE

SHEETS
26

SHEET
19

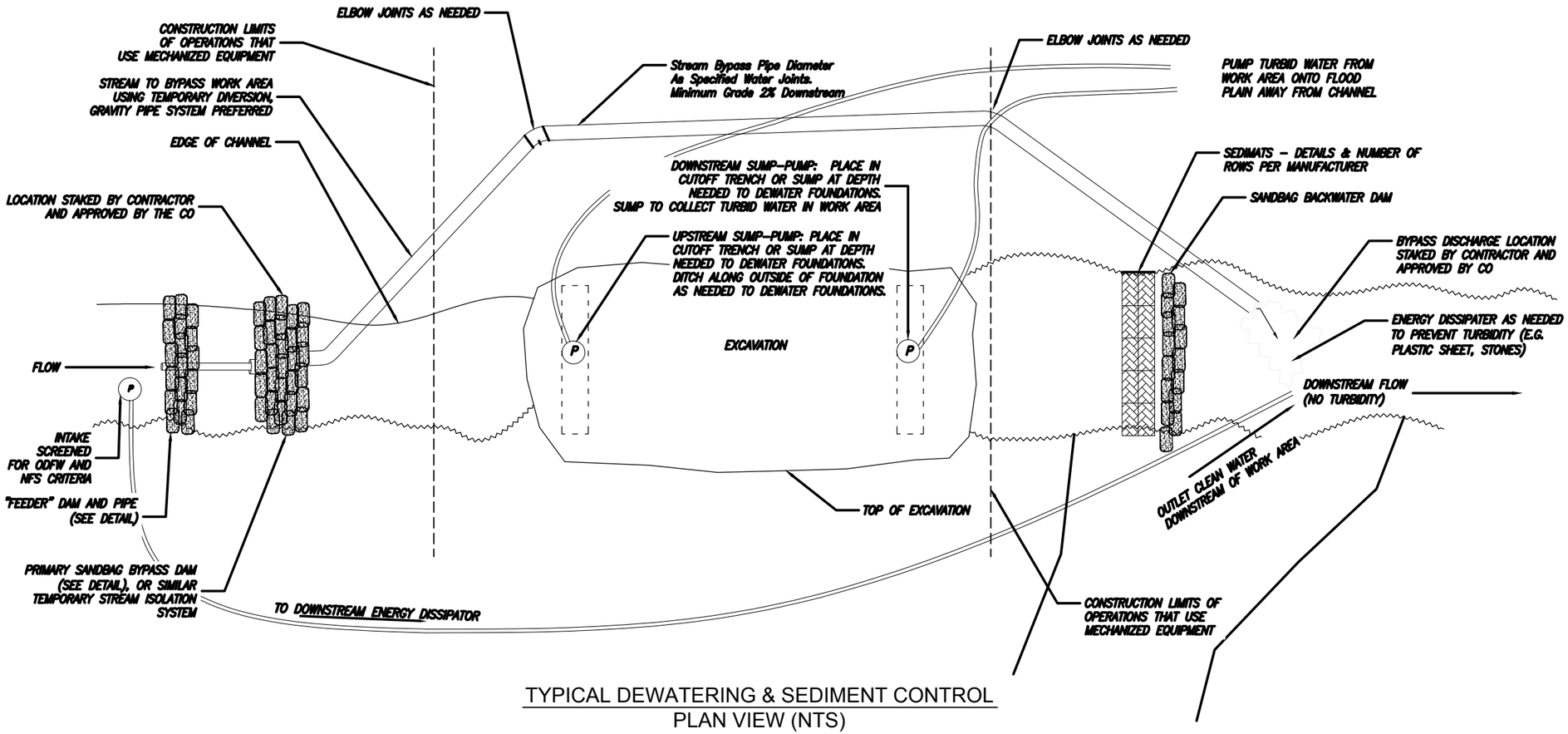

TYPICAL DEWATERING & SEDIMENT CONTROL
PLAN VIEW (NTS)

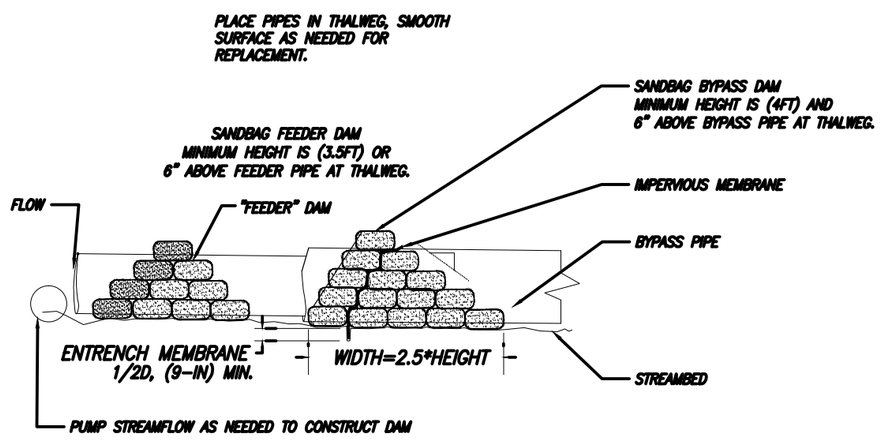

SANDBAG BYPASS DAMS AT INLET AREA
ELEVATION VIEW (NTS)

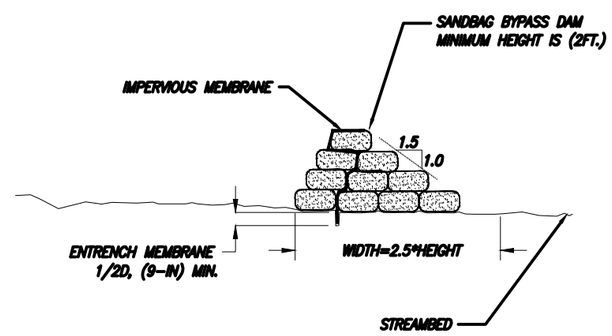

SANDBAG CONTAINMENT & BACKWATER PREVENTION DAM AT OUTLET
ELEVATION VIEW (NTS)

NOTES:

1. CONTRACTOR SHALL SUBMIT A DEWATERING PLAN TO THE C.O. FOR APPROVAL PRIOR TO BEGINNING CONSTRUCTION. THE BYPASS PIPE AND DAM SHALL BE LEAK-PROOF. CONSTRUCTION SHALL NOT PROCEED UNTIL DEWATERING PLAN HAS BEEN ACCOMPLISHED AND APPROVED BY THE C.O. IN WRITING.
2. THE PREFERRED WORK AREA ISOLATION TECHNIQUE SHALL INCORPORATE GRAVITY DEWATERING TECHNIQUES AS MUCH AS POSSIBLE.
3. MINIMUM BYPASS PIPE DIMENSIONS: 18" ø OR OTHERWISE AGREED IN WRITING BY THE C.O..
4. THE BYPASS PIPE MAY BE PLACED ON EITHER SIDE OF EXCAVATION UNLESS OTHERWISE NOTED BY THE CO.
5. PUMPS SHALL BE CLEAN AND FREE OF LEAKS AND SHALL BE PLACED IN A CONTAINMENT KIT.
6. PUMPS USED FOR DEWATERING SHALL HAVE INTAKE SCREENS THAT MEET ODFW SCREEN CRITERIA OR THE NFS OR OPERATED IN AN AREA WHERE FISH OR OTHER LIVING ORGANISMS ARE NOT ABLE TO ENTER OR ARE ISOLATED.
7. MAINTAIN ALL ELEMENTS OF THE OPERATION IN ORDER TO FACILITATE CONSTRUCTION, PREVENT HARM TO AQUATIC ORGANISMS AND PREVENT SEDIMENT AND TURBIDITY FROM ENTERING THE STREAM.
8. PUMPS SHALL REMAIN OPERATING DOWNSTREAM OF THE BYPASS DAM IF THE DAM DOES NOT SEAL THOROUGHLY. A PUMP SHALL BE MAINTAINED RUNNING 24 HOURS A DAY IN THE DOWNSTREAM SEDIMENT RETENTION DAM TO DIVERT WATER CONTAINING SEDIMENT TO THE FOREST FLOOR WHERE IT WILL BE FILTERED BEFORE ENTERING BACK INTO THE STREAM. PUMPS SHALL REMAIN IN POSITION ON SITE EVEN IF WATER DISCHARGE DROPS CONSIDERABLY, TO BE PREPARED FOR STORM FLOWS.
9. CONTRACTOR SHALL PREPARE AND HAVE ON-SITE A SPILL CONTAINMENT AND CONTROL PLAN WITH NOTIFICATION PROCEDURES, SPECIFIC CLEANUP AND DISPOSAL INSTRUCTIONS FOR ALL PRODUCTS USED ON-SITE. THE PLAN MUST INCLUDE 24-HOUR EMERGENCY CONTACT NUMBERS FOR THE CONTRACTOR.

PACIFIC NORTHWEST REGION

PROJECT LAKE TIMBER SALE

SHEET TYPICAL DEWATERING PLAN

U.S.D.A. FOREST SERVICE

SHEETS 26

SHEET 20

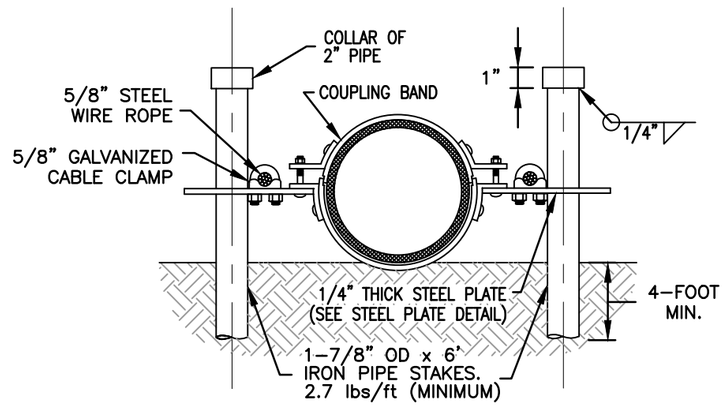

ANCHOR SET SECTION

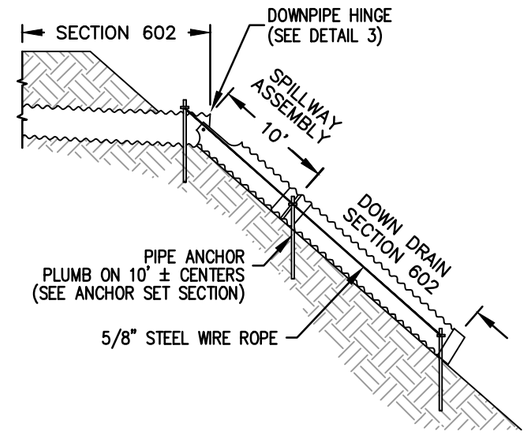

ANCHORING PROFILE

1 TYPICAL PIPE ANCHOR ASSEMBLY DETAIL

NOT TO SCALE

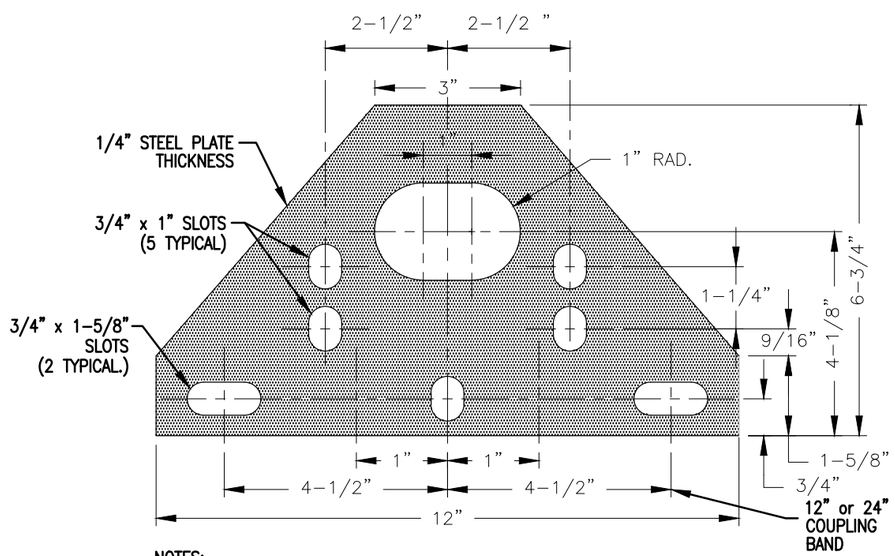

NOTES:
1. MEASURE LENGTH OF COUPLING BAND PARALLEL TO THE CENTERLINE OF THE PIPE.
2. PLATE MATERIAL SHALL BE ASTM A36 1/4". GALVANIZE AFTER FABRICATION.

2 TYPICAL ANCHOR STEEL PLATE DETAIL

NOT TO SCALE

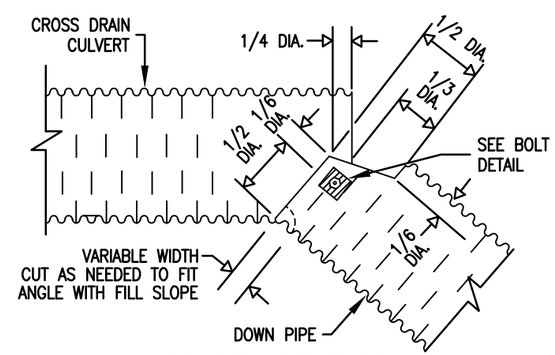

SPILLWAY ASSEMBLY

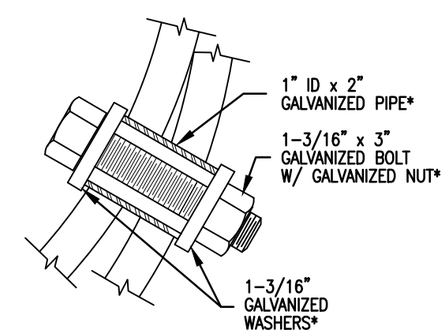

BOLT DETAIL *MINIMUM SIZE

3 TYPICAL DOWN PIPE HINGE DETAIL

NOT TO SCALE

PACIFIC NORTHWEST REGION

PROJECT LAKE TIMBER SALE

SHEET DRAINAGE DOWN PIPE DETAILS

U.S.D.A. FOREST SERVICE

SHEETS 26

SHEET 21

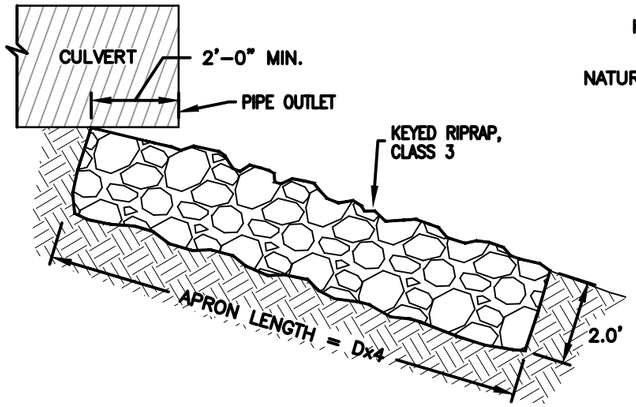

PROFILE VIEW

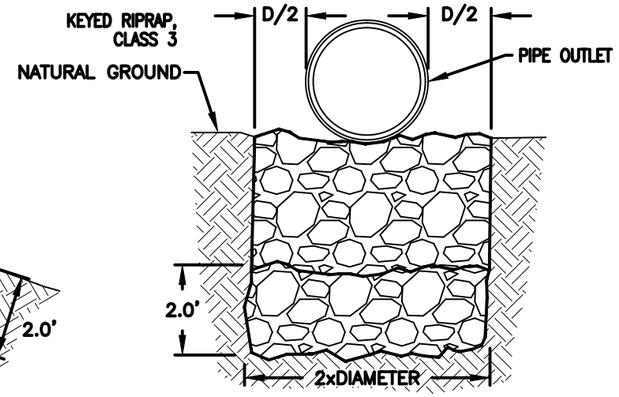

SECTION VIEW

ENERGY DISSIPATION PAD				
CULVERT DIA.	RIPRAP CLASS	APRON DIMENSIONS	DEPTH OF APRON	RIPRAP QUANTITY
24"	3	8' x 4'	2.0'	3 cy
36"	3	12' x 6'	2.0'	5 cy

1 TYPICAL ENERGY DISSIPATOR DETAIL
NOT TO SCALE

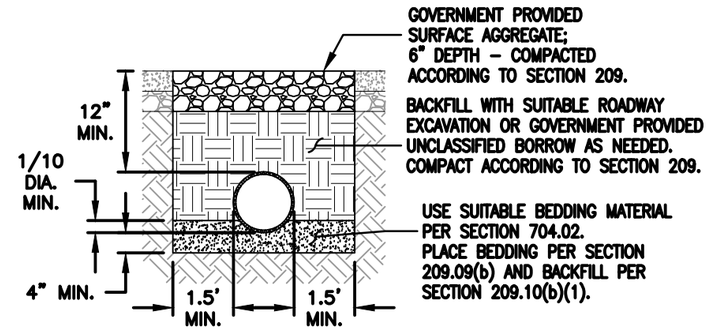

SECTION VIEW

2 TYPICAL CULVERT TRENCH DETAIL
NOT TO SCALE

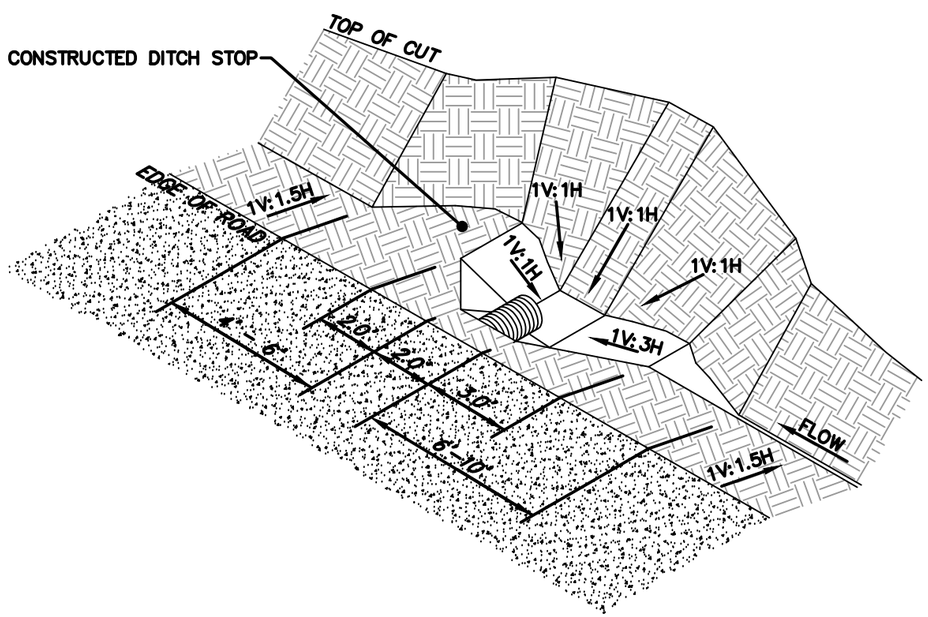

3 TYPICAL CATCH BASIN DETAIL
NOT TO SCALE

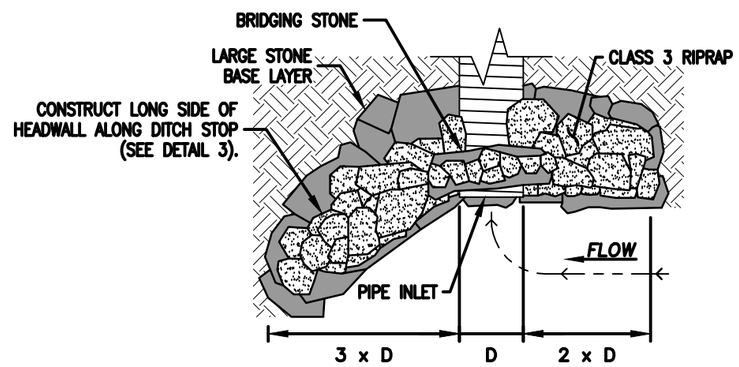

PLAN VIEW

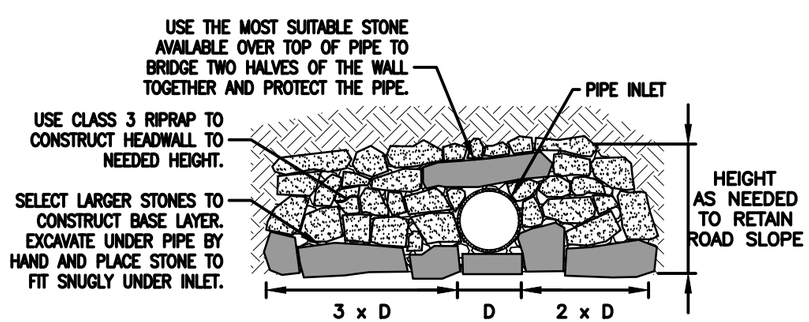

ELEVATION VIEW

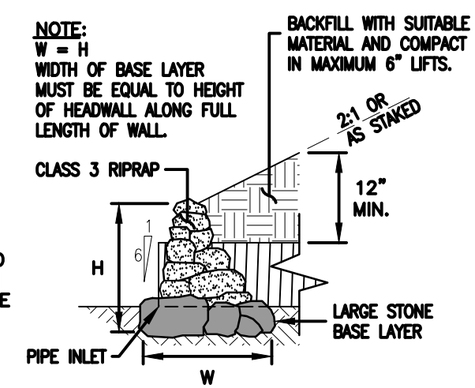

SECTION VIEW

4 TYPICAL STONE HEADWALL DETAIL
APPLIES TO M.P. 11.60
NOT TO SCALE

PACIFIC NORTHWEST REGION

PROJECT LAKE TIMBER SALE

SHEET CULVERT INSTALLATION DETAILS

U.S.D.A. FOREST SERVICE

SHEETS 26

SHEET 22

TYPICAL SECTION

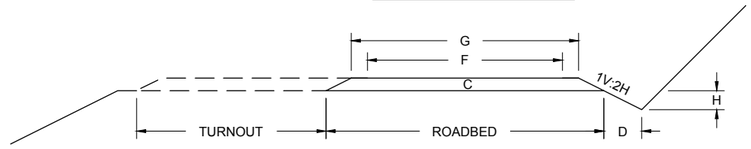

SECTION VIEW

SURFACE ROCK
REPLACEMENT FOR AGGREGATE ROADS

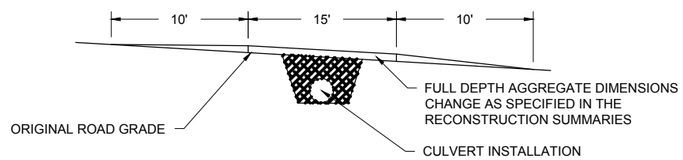

PROFILE VIEW

NOTES:
1. TOP WIDTH DIMENSIONS ARE NOTED IN THE RECONSTRUCTION SUMMARIES.
2. THE SPOT ROCK LENGTH GIVEN IN THE RECONSTRUCTION SUMMARIES DO NOT INCLUDE TAPERS, BUT 10' TAPERS DO APPLY.

ROAD NUMBER	BEGINNING MILE POST	ENDING MILE POST	CONSTRUCTION TOLERANCE	OUTSLOPED (O) INSLOPED (I) CROWNED (C)	ROADBED WIDTH (FT)	DITCH DIMENSIONS (FT)		ROAD STRUCTURE		
								TRAVELED WAY WIDTH (FT)	ROADWAY WIDTH (FT)	SLOPE RATIO AGG
				%		D	H	F	G	V:H
4630170	0.00	1.00	D	3 O*	16.87*	2*	1*	12*	14*	1V:2H
4635000	0.00	5.62	D	3 C*	16.87*	2*	1*	12*	14*	1V:2H
4635120	0.00	2.39	D	3 C*	16.87*	2*	1*	12*	14*	1V:2H
570000	0.00	4.97	D	3 C*	28.87*	2*	1*	24	26	1V:2H
5720000	0.00	2.70	D	3 C*	16.87*	2*	1*	12*	14*	1V:2H

* DIMENSIONS MARKED WITH AN ASTERISK MAY BE ADJUSTED DURING CONSTRUCTION BY THE CO TO FIT SITE GEOMETRY.

PACIFIC NORTHWEST REGION

PROJECT LAKE TIMBER SALE

SHEET ROAD STRUCTURE DETAILS

U.S.D.A. FOREST SERVICE

SHEETS 26

SHEET 23

BIOFILTER BAG CHECK DAM - TYPE 3

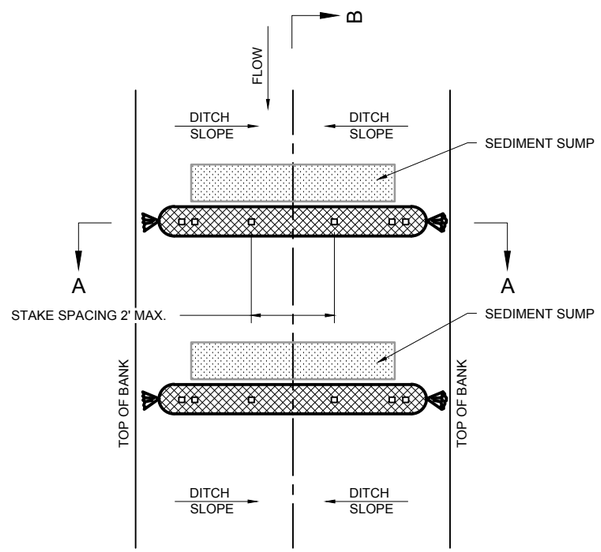

PLAN VIEW

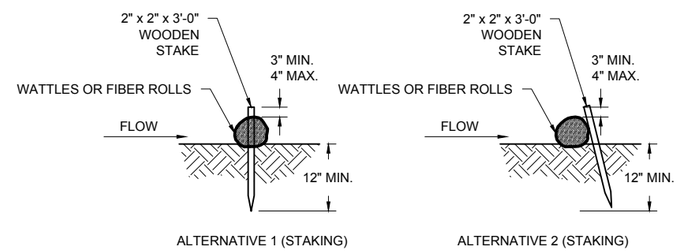

FIBER ROLL STAKING

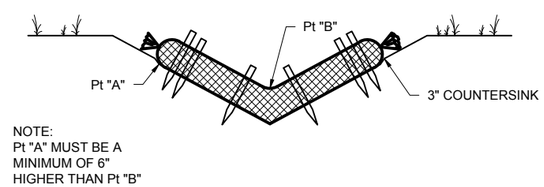

NOTE:
Pt "A" MUST BE A MINIMUM OF 6" HIGHER THAN Pt "B"

SECTION A - A

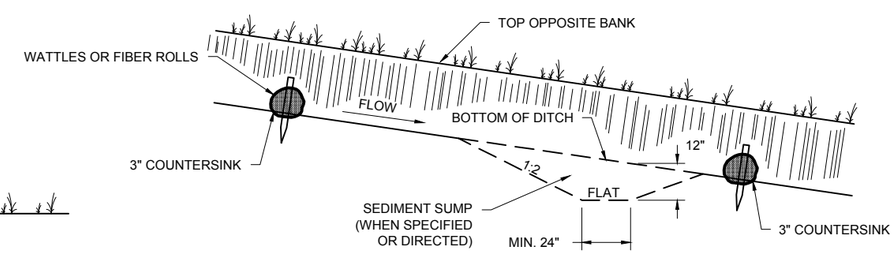

SECTION B - B

PACIFIC NORTHWEST REGION

PROJECT LAKE TIMBER SALE

SHEET BIOFILTER CHECK DAM DETAILS

U.S.D.A. FOREST SERVICE

SHEETS 26

SHEET 24

DISPOSAL SITE TYPICAL

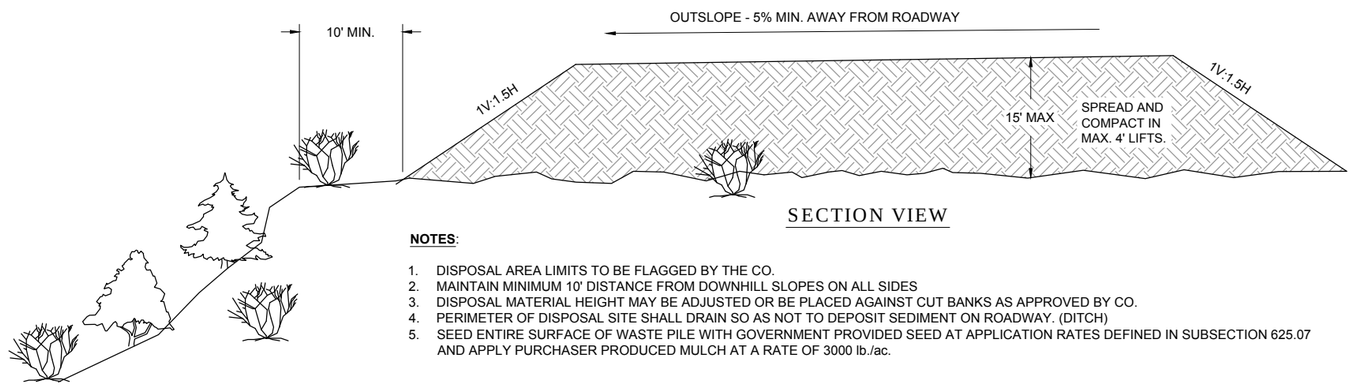

SECTION VIEW

NOTES:

1. DISPOSAL AREA LIMITS TO BE FLAGGED BY THE CO.
2. MAINTAIN MINIMUM 10' DISTANCE FROM DOWNHILL SLOPES ON ALL SIDES
3. DISPOSAL MATERIAL HEIGHT MAY BE ADJUSTED OR BE PLACED AGAINST CUT BANKS AS APPROVED BY CO.
4. PERIMETER OF DISPOSAL SITE SHALL DRAIN SO AS NOT TO DEPOSIT SEDIMENT ON ROADWAY. (DITCH)
5. SEED ENTIRE SURFACE OF WASTE PILE WITH GOVERNMENT PROVIDED SEED AT APPLICATION RATES DEFINED IN SUBSECTION 625.07 AND APPLY PURCHASER PRODUCED MULCH AT A RATE OF 3000 lb./ac.

ROADSIDE BRUSHING DETAILS

TYPICAL SECTION

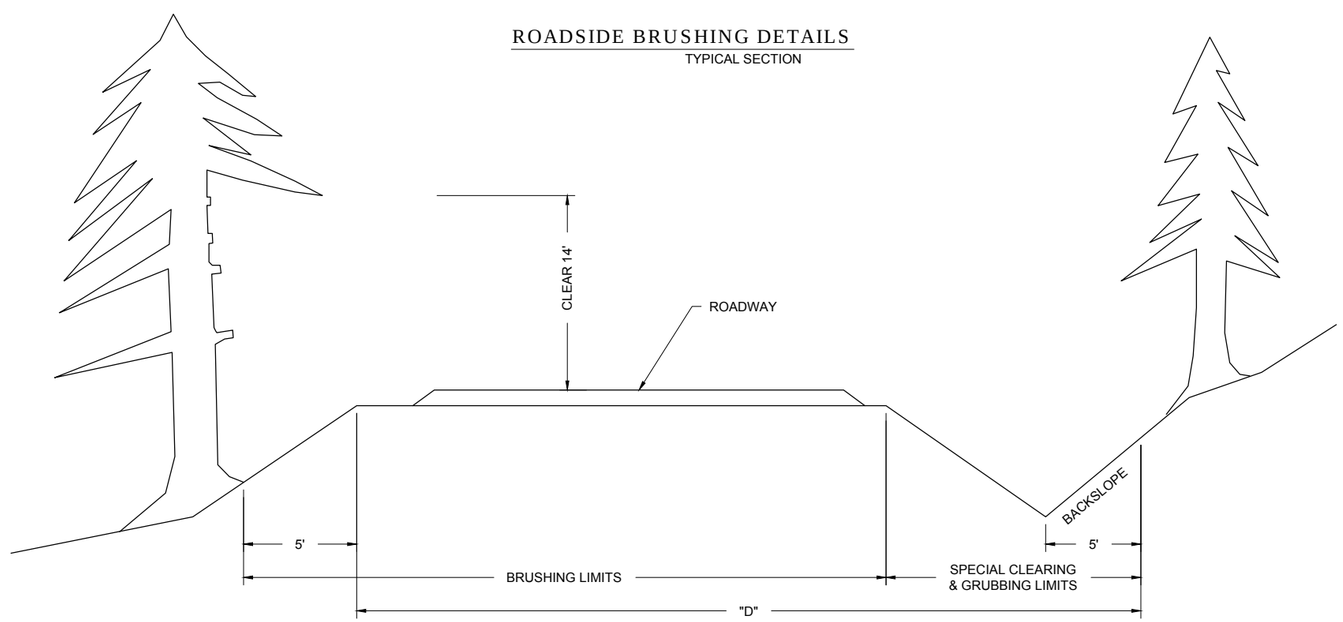

NOTES:

1. OTHER THAN WORK COVERED UNDER PAY ITEM #20204 LEAVE TREES OVER 8 INCHES IN DIAMETER AS MEASURED AT 4 ½' ABOVE THE GROUND THAT ARE WITHIN THE BRUSHING LIMITS BUT NOT BEYOND THE BOTTOM OF DITCH AND NOT BEYOND HINGE POINT ON THE FILL SLOPE SIDE. LIMB TO 14 FEET ABOVE THE TRAVELED WAY SURFACE.
2. GRUB STUMPS WITHIN "D" ABOVE AND SCATTER OUTSIDE THE CLEARING LIMITS OR AS NOTED ON THE WORK DESCRIPTIONS.
3. CUT ALL VEGETATION WITHIN THE BRUSHING LIMITS TO A MAXIMUM HEIGHT OF 6 INCHES ABOVE THE GROUND SURFACE.
4. ROADS MECHANICALLY BRUSHED MAY REQUIRE MANUAL COLLECTION OF CUT MATERIAL FOR DISPOSAL ACCORDING TO THE SPECIFIED DISPOSAL METHOD.
5. FOR PAY ITEMS 20204 & 23051 ON THE DITCH SIDE OF THE ROAD, CLEAR AND GRUB ALL TREES FROM THE BEGINNING OF THE ROADWAY SHOULDER TO THE LIMIT OF THE BACK SLOPE.
6. SEED ALL DISTURBED AREAS WITH GOVERNMENT PROVIDED SEED AT APPLICATION RATES DEFINED IN SUBSECTION 625.07 AND APPLY PURCHASER PRODUCED MULCH AT A RATE OF 3000 lb./ac.

PACIFIC NORTHWEST REGION

PROJECT LAKE TIMBER SALE

SHEET DISPOSAL AND BRUSHING DETAILS

U.S.D.A. FOREST SERVICE

SHEETS 26

SHEET 25

DEVIL'S RIDGE QUARRY DEVELOPMENT PLAN

CONTOUR INTERVAL = 25 FEET

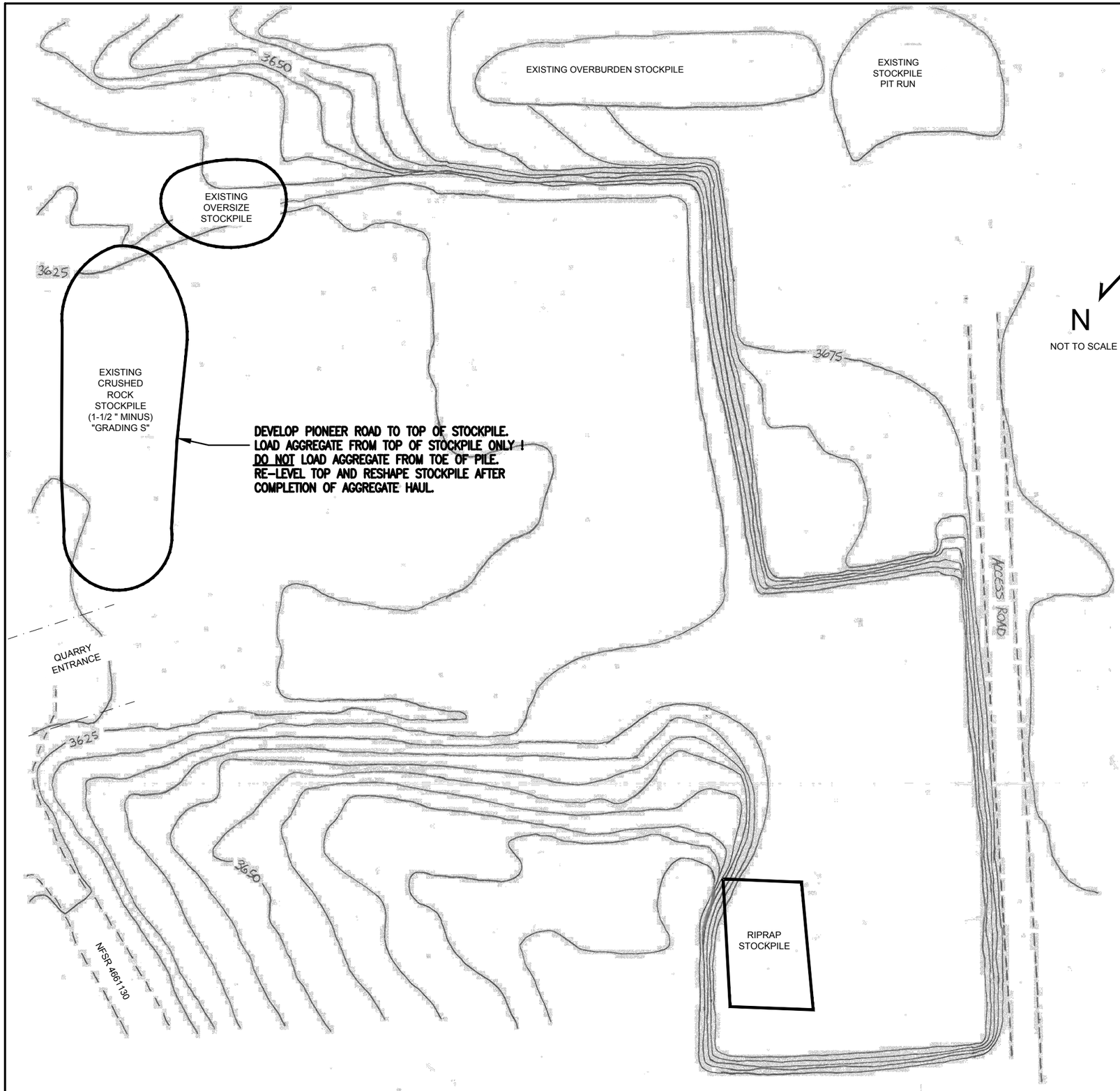

QUARRY OPERATION NOTES:

1. COORDINATE QUARRY ACTIVITIES WITH OTHER QUARRY USERS.
2. EXCAVATE MATERIAL ONLY WITHIN THE AREA STAKED BY THE C.O.
3. COMPLETE FINAL GRADING AND CLEANUP IMMEDIATELY AFTER ROCK REMOVAL.
4. REMOVE ALL REFUSE FROM NATIONAL FOREST LAND.

PACIFIC NORTHWEST REGION

PROJECT
LAKE TIMBER SALE

SHEET
DEVILS RIDGE QUARRY DEVELOPMENT

U.S.D.A. FOREST SERVICE

SHEETS 26

SHEET 26

Specification and Supplemental Specification List for Lake Timber Sale Specified Roads

Road Number			4630170	4635000	4635120	5700000	5720000
Termini (Miles)			1.00	5.62	2.39	4.97	2.70
Construction							
Reconstruction			X	X	X	X	X
Standard Specifications	**Date**	**Title**	**Specifications not included in the specification listing, but referenced by listed specifications, are applicable.**				
101-109	2003		X	X	X		X
151	2005	Mobilization	X	X	X	X	X
153	2007	Contractor Quality Control	X	X	X	X	X
152	2003	Construction Surveying and Staking	X	X			X
153	2003	Contractor Quality Control	X	X	X	X	X
155	2005	Schedules for Construction Contracts	X	X	X	X	X
156	2007	Public Traffic	X	X	X	X	X
157	2006	Soil Erosion Control	X	X			X
201	2003	Clearing and Grubbing	X	X			X
202	2003	Additional Clearing and Grubbing	X	X			
203	2005	Removal of Structures and Obstructions	X	X			X
209	2003	Structural Ecavation and Backfill					X
251	2003	Riprap	X	X			
303	2003	Road Reconditioning	X	X	X		X
404	2003	Minor Hot Asphalt Concrete					X
602	2003	Culverts and Drains	X	X			
625	2003	Turf Establishment					
633	2003	Permanent Traffic Control		X			X
634	2003	Permanent Pavement Markings				X	X
635	2003	Temporary Traffic Control	X	X	X	X	X
703	2003	Aggregate	X	X	X		X
704	2003	Soil	X	X	X		X
714	2003	Geotextile and Geocomposite Drain Material					X
Supplemental Specifications	**Date**	**Title**					
Preface	03/15/04	Preface	X	X	X	X	X
101.01	01/22/09	Meaning of Terms	X	X	X	X	X
101.01	01/22/09	Meaning of Terms	X	X	X	X	X
101.03	06/16/06	Abbreviations	X	X	X	X	X
101.04	03/29/07	Definitions	X	X	X	X	X
101.04	11/06/07	Definitions	X	X	X	X	X
102.00	02/16/05	Bid, Award, and Execution of Contract	X	X	X	X	X
103.00	02/16/05	Deletions	X	X	X	X	X
104.00	06/16/06	Deletions	X	X	X	X	X
104.03	01/22/09	Specifications and Drawings	X	X	X	X	X
104.06	02/17/05	Use of Roads by Contractor	X	X	X	X	X
104.07	02/17/05	Other Contracts	X	X	X	X	X
105.02	01/18/07	Government Provided Material Sources	X	X	X	X	X
105.02	03/08/07	Contractor Provided Material Sources	X	X	X	X	X
105.05	05/12/04	Use of Material Found in the Work	X	X	X	X	X
106.01	07/31/07	Conformity with Contract	X	X	X	X	X

Specification and Supplemental Specification List for Lake Timber Sale Specified Roads

Road Number			4630170	4635000	4635120	570000	5720000
Termini (Miles)			1.00	5.62	2.39	4.97	2.70
Construction							
Reconstruction			X	X	X	X	X
Supplemental Specification	**Date**	**Title**					
106.07	05/11/04	Delete	X	X	X	X	X
107.02	02/17/05	Protection and Restoration of Property and Landscape	X	X	X	X	X
107.05	05/11/04	Responsibility for Damage Claims	X	X	X	X	X
107.06	06/16/06	Contractor's Responsibility for Work	X	X	X	X	X
107.08	03/29/05	Sanitation, Health, and Safety	X	X	X	X	X
107.09	06/16/06	Legal Relationship of the Parties	X	X	X	X	X
107.10	06/16/06	Environmental Protection	X	X	X	X	X
108.00	02/16/05	Delete	X	X	X	X	X
109.00	02/17/05	Deletions	X	X	X	X	X
109.02	06/16/06	Measurement Terms and Definitions	X	X	X	X	X
152.00	08/05/05	Construction Survey and Staking	X	X			X
153.04	10/24/07	Records	X	X	X	X	X
155.00	05/11/05	Delete	X	X	X	X	X
156.00	04/17/07	Public Traffic	X	X	X	X	X
156.03	02/24/05	Accommodating Traffic During Work	X	X	X	X	X
156.04	02/24/05	Maintaining Roadways During Work	X	X	X	X	X
156.08	02/24/05	Traffic and Safety Supervisor	X	X	X	X	X
157.00	10/10/06	Soil Erosion Control	X	X	X		
157.01	02/03/09	Soil Erosion Control - Add the Following					X
170.00	3/262007	Develop Water Supply and Watering	X	X	X	X	X
201.01	02/18/05	Description	X	X			X
201.02	08/05/09	Material	X	X			X
201.04	02/18/05	Clearing	X	X			X
201.04	02/22/05	Clearing (c)	X	X			X
201.06	02/18/05	Disposal	X	X			X
203.01	02/25/05	Description	X	X	X		X
203.04	03/26/07	Removing Material	X	X	X		X
203.05	03/26/07	Disposing of Material (a)	X	X	X		X
203.05	03/26/07	Disposing of Material (e through m)	X	X	X		X
204.00	03/26/09	Excavation and Embankment	X	X			X
209.07	10/11/06	Dewatering	X	X			X
212.00	02/13/08	Linear grading	X				
230.00	08/04/05	Roadside Brushing	X	X	X		
251.03	08/05/09	Riprap	X	X			
262.00	05/14/04	Reinforced Soil Embankment					X
303.01	03/02/05	Road Reconditioning	X	X	X		
303.06	08/05/08	Aggregate Surface Reconditioning	X	X	X		
303.07	03/02/05	Roadway Reconditioning	X	X	X		
303.10	03/29/05	Measurement	X	X	X		X
322.00	10/14/11	Minor Aggregate Courses	X				X
404.02	06/09/06	Composition of Mix					X
404.03	06/06/07	Surface Preparation					X
404.04	03/02/05	Weather Limitations					X

Specification and Supplemental Specification List for Lake Timber Sale Specified Roads

Road Number			4630170	4635000	4635120	570000	5720000
Termini (Miles)			**1.00**	**5.62**	**2.39**	**4.97**	**2.70**
Construction							
Reconstruction			X	X	X	X	X
Supplemental Specification	**Date**	**Title**					
404.06	03/02/05	Placing					X
404.07	03/02/05	Compacting					X
602.03	09/06/05	General	X	X			X
602.03	10/02/08	General	X	X			X
602.03	03/17/10	General	X	X			X
625.05	03/30/05	Watering	X	X	X	X	X
625.06	09/17/08	Fertilizing	X	X	X	X	X
625.07	09/17/08	Seeding	X	X	X	X	X
633.02	03/03/05	Material		X			X
633.03	03/03/05	General		X			X
634.03	03/03/05	General				X	
635.03	05/13/04	General	X	X	X	X	X
703.05	08/14/09	Subbase, Base, Surface Course, and Screened Aggregate					
704.02	03/26/07	Bedding Material	X	X			X
704.02	04/24/08	Bedding Material	X	X			X
704.03	03/26/07	Backfill Material	X	X			X
714.00	03/26/07	Geotextile and Geocomposite Drain Material		X			

Lake Timber Sale Specified Roads Supplemental Specifications

Preface

Preface_wo_03_15_2004_m

Delete all but the first paragraph and add the following:

The Forest Service, US Department of Agriculture has adopted FP-03 for construction of National Forest System Roads.

101 - Terms, Format, and Definitions

101.01_nat_us_01_22_2009

101.01 Meaning of Terms

Delete all references to the TAR (Transportation Acquisition Regulations) in the specifications.

101.01_nat_us_01_22_2009

101.01 Meaning of Terms

Delete all references to the FAR (Federal Acquisition Regulations) in the specifications.

101.03_nat_us_06_16_2006

101.03 Abbreviations.

Add the following to (a) Acronyms:

AFPA	American Forest and Paper Association
MSHA	Mine Safety and Health Administration
NIST	National Institute of Standards and Technology
NESC	National Electrical Safety Code
WCLIB	West Coast Lumber Inspection Bureau

.

Add the following to (b) SI symbols:

mp	Milepost
ppm	Part Per Million

101.04 Definitions.

Delete the following definitions and substitute the following:

Bid Schedule--The Schedule of Items.

Bridge--No definition.

Contractor--The individual or legal entity contracting with the Government for performance of prescribed work. In a timber sale contract, the contractor is the "purchaser".

Culvert--No definition.

Right-of-Way--A general term denoting (1) the privilege to pass over land in some particular line (including easement, lease, permit, or license to occupy, use, or traverse public or private lands), or (2) Real property necessary for the project, including roadway, buffer areas, access, and drainage areas.

Add the following:

Adjustment in Contract Price--"Equitable adjustment," as used in the Federal Acquisition Regulations, or "construction cost adjustment," as used in the Timber Sale Contract, as applicable.

Change--"Change" means "change order" as used in the Federal Acquisition Regulations, or "design change" as used in the Timber Sale Contract.

Design Quantity--"Design quantity" is a Forest Service method of measurement from the FS-96 *Forest Service Specifications for the Construction of Roads and Bridges.* Under these FP specifications this term is replaced by the term "Contract Quantities".

Forest Service--The United States of America, acting through the Forest Service, U.S. Department of Agriculture.

Neat Line--A line defining the proposed or specified limits of an excavation or structure.

Pioneer Road--Temporary construction access built along the route of the project.

Purchaser--The individual, partnership, joint venture, or corporation contracting with the Government under the terms of a Timber Sale Contract and acting independently or through agents, employees, or subcontractors.

Protected Streamcourse--A drainage shown on the plans or timber sale area map that requires designated mitigation measures.

Road Order--An order affecting and controlling traffic on roads under Forest Service jurisdiction. Road Orders are issued by a designated Forest Officer under the authorities of 36 CFR, part 260.

Schedule of Items--A schedule in the contract that contains a listing and description of construction items, quantities, units of measure, unit price, and amount.

Utilization Standards--The minimum size and percent soundness of trees described in the specifications to determine merchantable timber.

Add Figure 101-1—Illustration of road structure terms:

Figure 101-1—Illustration of road structure terms.

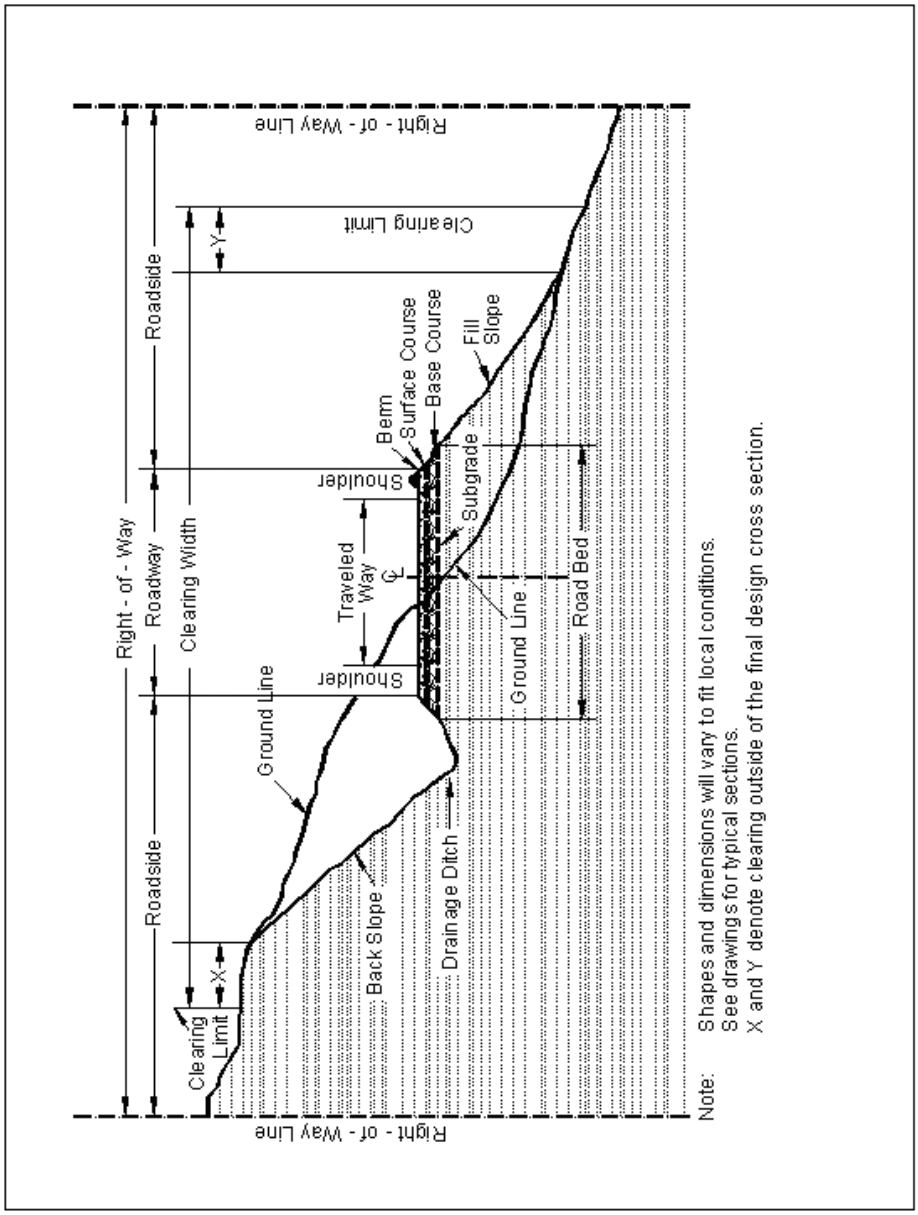

101.04_nat_us_11_06_2007

101.04 Definitions.

Delete the following definitions:

Contract Modification

Day

Notice to Proceed

Solicitation

102 - Bid, Award, and Execution of Contract

102.00_nat_us_02_16_2005

102 Bid, Award, and Execution of Contract

Delete Section 102 in its entirety.

103 - Scope of Work

103.00_nat_us_02_16_2005

Deletions

Delete all but subsection 103.01 Intent of Contract.

104 - Control of Work

104.00_nat_us_06_16_2006

Deletions

Delete Sections 104.01, 104.02, and 104.04.

104.03_nat_us_01_22_2009

104.03 Specifications and Drawings.

Delete 104.03.

104.06_nat_us_02_17_2005

Add the following subsection:

104.06 Use of Roads by Contractor

The Contractor is authorized to use roads under the jurisdiction of the Forest Service for all activities necessary to complete this contract, subject to the limitations and authorizations designated in the Road Order(s) or described in the contract, when such use will not damage the roads or national forest resources, and when traffic can be accommodated safely.

104.07_nat_us_02_17_2005

Add Subsection.

104.07 Other Contracts.

The Forest Service is administering multiple timber sale contracts using NFSRs 16 and 1610 beyond mile post 7.23 (adjacent to this contract).

105 - Control of Material

105.02_nat_us_01_18_2007

105.02 Material Sources.

105.02(a) Government-provided sources.

Add the following:

Comply with the requirements of 30 CFR 56, subparts B and H. Use all suitable material for aggregate regardless of size unless otherwise designated. When required, re-establish vegetation in disturbed areas according to section 625.

105.02_nat_us_03_08_2007

105.02 Material Sources.

105.02(a) Contractor-provided sources.

Add the following:

All material (e.g., soil, gravel, sand, borrow, aggregate, etc.) transported onto National Forest System land or incorporated into the work will be weed-free. The Contracting Officer may request written documentation of methods used to determine the weed-free status of any and all materials furnished by the contractor. Contractor-provided expertise and methods to establish weed-free status must be appropriate for the weeds of concern in the local area. The following applies to this contract:

A Forest Service weed specialist will inspect proposed sources to determine weed-free status. Provide the Contracting Officer written notification of proposed material sources 10 days prior to use. Written approval of the specific source will be provided to the contractor. If weed species are present in the proposed source, appropriate mitigation measures may allow conditional use of the source as required by the Contracting Officer.

105.05_nat_us_05_12_2004

105.05 Use of Material Found in the Work.

Delete 105.05 (a) and (b) and the last sentence of the second paragraph and substitute the following:

Materials produced or processed from Government lands in excess of the quantities required for performance of this contract are the property of the Government. The Government is not obligated to make reimbursement for the cost of producing these materials.

106 - Acceptance of Work

106.01_nat_us_07_31_2007

106.01 Conformity with Contract Requirements.

Delete Subsection 106.01 and substitute the following:

References to standard test methods of AASHTO, ASTM, GSA, and other recognized standard authorities refer to the methods in effect on the date of solicitation for bids.

Perform all work to the lines, grades, cross-sections, dimensions, and processes or material requirements shown on the plans or specified in the contract.

Incorporate manufactured materials into the work according to the manufacturer's recommendations or to these specifications, whichever is more strict.

Plan dimensions and contract specification values are the values to be strived for and complied with as the design values from which any deviations are allowed. Perform work and provide material that is uniform in character and reasonably close to the prescribed value or within the specified tolerance range. The purpose of a tolerance range is to accommodate occasional minor variations from the median zone that are unavoidable for practical reasons.

When standard manufactured items are specified (such as fence, wire, plates, rolled shapes, pipe conduits, etc., that are identified by gauge, unit mass, section dimensions, etc.), the identification will be considered to be nominal masses or dimensions. Unless specific contract tolerances are noted, established manufacturing tolerances will be accepted.

The Government may inspect, sample, or test all work at any time before final acceptance of the project. When the Government tests work, copies of test reports are furnished to the Contractor upon request. Government tests may or may not be performed at the work site. If Contractor testing and inspection is verified by the Government, the Contractor's results may be used by the Government to evaluate work for acceptance. Do not rely on the availability of Government test results for process control.

Acceptable work conforming to the contract will be paid for at the contract unit bid price. Four methods of determining conformity and accepting work are described in Subsections 106.02 to 106.05 inclusive. The primary method of acceptance is specified in each Section of work. However, work may be rejected at any time it is found by any of the methods not to comply with the contract.

Remove and replace work that does not conform to the contract, or to prevailing industry standards where no specific contract requirements are noted, at no cost to the Government.

(a) Disputing Government test results. **If the accuracy of Government test results is disputed, promptly inform the CO. If the dispute is unresolved after reasonable steps are taken to resolve the dispute, further evaluation may be obtained by written request. Include a narrative describing the dispute and a proposed resolution protocol that addresses the following:**

(1) Sampling method;

(2) Number of samples;
(3) Sample transport;
(4) Test procedures;
(5) Testing laboratories;
(6) Reporting;
(7) Estimated time and costs; and
(8) Validation process.

If the evaluation requires additional sampling or testing be performed, mutually agree with the Government on witnessing procedures and on sampling and testing by a third party laboratory. Use a third party laboratory accredited by the AASHTO accreditation program. Provide proof of the laboratory's accreditation for the test procedures to be used. Do not use the same laboratory that produced the disputed Government test results or that produced the test results used as a basis for the dispute.

The CO will review the proposed resolution protocol and may modify it before final approval and execution.

The Government will use the approved resolution protocol test results to determine the validity of the disputed testing. If the Government test results are validated, the Contractor will be responsible for all costs associated with developing and performing the resolution protocol. If the Government test results are not validated, the Government will be responsible for all costs associated with developing and performing the resolution protocol. If the validity of the Government test results cannot be determined, the Contractor and Government will equally share all costs associated with developing and carrying out the resolution protocol.

(b) Alternatives to removing and replacing non-conforming work. As an alternative to removal and replacement, the Contractor may submit a written request to:

(1) Have the work accepted at a reduced price; or

(2) Be given permission to perform corrective measures to bring the work into conformity.

The request must contain supporting rationale and documentation. Include references or data justifying the proposal based on an evaluation of test results, effect on service life, value of material or work, quality, aesthetics, and other tangible engineering basis. The CO will determine disposition of the nonconforming work.

106.07_nat_us_05_11_2004

106.07 Delete

Delete subsection 106.07.

107 - Legal Relations and Responsibility to the Public

107.02_nat_us_02_17_2005

107.02 Protection and Restoration of Property and Landscape.

Add the following:

Do not work within the wetted perimeter of streams before July 15 or after August 31.

All equipment used for in-stream work shall be cleaned and leaks repaired prior to entering the project area. Remove external oil and grease, along with dirt and mud prior to construction. Thereafter, inspect equipment daily for leaks or accumulations of grease, and fix any identified problems before entering streams or areas that drain directly to streams or wetlands.

Equipment used for in-stream or riparian work shall be fueled and serviced in an established staging area. When not in use, vehicles shall be stored in the staging area.

Minimize the number and length of stream crossings and access routes through riparian areas, thereby limiting the disturbance to the riparian habitat. Crossings and access routes shall be as close to right angles as possible. Stream crossings shall not increase risks of channel re-routing at low and high water conditions.

The work in this contract is covered by a U.S. Army Corps of Engineers Regional General Permit for U.S. Forest Service and Bureau of Land Management Aquatic Habitat Restoration within the State of Oregon. As part of the General Conditions work must comply with the Oregon Department of Environmental Quality 401 Water Quality Certification.

When drafting water from live streams:

a. No water shall be withdrawn from any occupied Listed Fish Habitat (LFH) stream (Middle Fork Hood River and Bear Creek) except in an emergency (e.g., wild fire) situation.
b. The Purchaser shall limit water withdrawals for road maintenance or other purposes in LFH and within 1,500 feet of LFH to 10 percent or less of stream flow at the point of withdrawal (visually estimated).
c. The Purchaser shall limit water withdrawals for road maintenance or other purposes in non-LFH streams greater than 1,500 feet from LFH limit withdrawal by 50 percent or less of the stream flow (visually estimated).
d. Regardless of water withdrawal location, use of screen material with either of the following maximum openings is required: 1.75 mm opening for woven wire or 3/32 inch opening for perforated plate.

107.05_nat_us_05_11_2004

107.05 Responsibility for Damage Claims.

Delete the entire subsection.

107.06_nat_us_06_16_2006

107.06 Contractor's Responsibility for Work.

Delete the following from the first paragraph.

"except as provided in Subsection 106.07".

07.08_nat_us_03_29_2005

107.08 Sanitation, Health, and Safety

Delete the entire subsection.

107.09_nat_us_06_16_2006

107.09 Legal Relationship of the Parties.

Delete the entire subsection.

107.10_nat_us_06_16_2006

107.10 Environmental Protection.

Add the following:

Design and locate equipment repair shops, stationary refueling sites, or other facilities to minimize the potential and impacts of hazardous material spills on Government land.

Before beginning any work, submit a Hazardous Spill Plan. List actions to be taken in the event of a spill. Incorporate preventive measures to be taken, such as the location of mobile refueling facilities, storage and handling of hazardous materials, and similar information. Immediately notify the CO of all hazardous material spills. Provide a written narrative report form no later than 24 hours after the initial report and include the following:

- Description of the item spilled (including identity, quantity, manifest number, and other identifying information).
- Whether amount spilled is EPA or state reportable, and if so whether it was reported, and to whom.
- Exact time and location of spill including a description of the area involved.
- Containment procedures.
- Summary of any communications the Contractor had with news media, Federal, state and local regulatory agencies and officials, or Forest Service officials.
- Description of clean-up procedures employed or to be employed at the site including final disposition and disposal location of spill residue.

When available provide copies of all spill related clean up and closure documentation and correspondence from regulatory agencies.

The Contractor is solely responsible for all spills or leaks that occur during the performance of this contract. Clean up spills or leaks to the satisfaction of the CO and in a manner that complies with Federal, state, and local laws and regulations.

108 - Prosecution and Progress

108.00_nat_us_02_16_2005

108 Delete.

Delete Section 108 in its entirety.

109 - Measurement and Payment

109.00_nat_us_02_17_2005

109 Deletions

Delete the following entire subsections:

109.06 Pricing of Adjustments.

109.07 Eliminated Work.

109.08 Progress Payments.

109.09 Final Payment.

109.02_nat_us_06_16_2006

109.02 Measurement Terms and Definitions.

(b) Contract quantity.

Add the following:

Contract quantities will be adjusted only when there are errors in the original design of 15% or more.

Change the following:

"(b) Cubic yard" to "(c) Cubic yard".

Add the following definition:

(p) Thousand Board Feet (Mbf). 1,000 board feet based on nominal widths, thickness, and extreme usable length of each piece of lumber or timber actually incorporated in the job. For glued laminated timber, 1,000 board feet based on actual width, thickness, and length of each piece actually incorporated in the job.

152 - Construction Survey and Staking

152.00_nat_us_08_05_2005

Description

152.01(c) Material.

Add the following:

Use required stake dimensions and materials. Pre-paint the top 2 inches of all stakes and lath, or mark them with plastic flagging. Use designated colors for paint or flagging. Mark all stakes with a stake pencil that leaves a legible imprint, or with waterproof ink.

Do not use aerosol spray paints.

Use moisture-resistant paper for survey notes. Keep notes in books with covers that will protect the contents and retain the pages in numerical sequence.

Construction Requirements

152.02 General.

Delete the first two sentences.

Add the following:

When indicated on the plans, a preliminary survey line has been established on the ground. The project location line is established by offsets from this preliminary line.

Delete second sentence in second paragraph and replace with the following:

Reestablish missing reference, control lines, or stakes as necessary to control subsequent construction staking operations

152.03 Survey and Staking Requirements.

(b) Roadway cross-sections.

Replace the first two sentences with the following:

Take roadway cross-sections normal to centerline. When the centerline curve radius is less than or equal to 200 feet, take cross-sections at a maximum centerline spacing of 25 feet. When the centerline curve radius is greater that 200 feet take cross-sections at a maximum centerline spacing of 80 feet.

c) Slope Stakes & References:

Replace section with the following:

Slope stakes and references. When required, locate slope stakes on designated portions of the road. Locate the slope stake catch points and use them to establish clearing limits and slope stake references.

Mark slope stakes with the station, the amount of cut or fill, the horizontal distance to centerline, and the slope ratios.

Place slope reference stakes at least 10 feet outside the clearing limit and mark with the offset distance to the slope stake. Place sight stakes when required.

Prior to clearing and grubbing operations, move the slope stake outside the clearing limit to the slope reference stake. After clearing and grubbing and before excavation, reset the slope stakes in their original position.

Use the designated method to establish the slope stake catchpoint.

- **Method I**—Computed Method. Use the template information shown in the plans or other Government-provided data to calculate the actual location of the catchpoint. The slope stake "catchpoint distance" provided may be used as a trial location to initiate slope staking. Recatch slope stakes on any section that does not match the staking report within the tolerances established in Table 152-2.
- **Method II**—Catchpoint Measurement Method. Determine the location of slope stake catchpoints by measuring the catchpoint distances shown in the plans or other Government-provided data.

(d) Clearing and grubbing limits.

Add the following:

Establish clearing limits on each side of the location line by measuring the required horizontal or slope distances shown in the stake notes. Mark the clearing limits with flagging or tags on trees to be left standing, or on lath. Make markings intervisible, and no more than 90 feet apart.

After establishing clearing limits, move the location line stake outside the clearing limits for station identification purposes, and mark it with horizontal distance to location line

(e) Centerline reestablishment.

Replace with the following:

Reestablish centerline from instrument control points. The maximum spacing between centerline points is 25 feet when the centerline curve radius is less than or equal to 200 feet. When the centerline curve radius is greater than 200 feet, the maximum distance between centerline points is 80 feet.

(g) Culverts.

Replace subsection with the following:

Set culvert reference stakes at all culvert locations. Set a culvert reference stake on the centerline of the culvert 10 feet from each end or beyond the clearing limit, whichever is greater. Record the following on culvert reference stakes:

(1) Diameter, actual field measured length, and type of culvert.

(2) The vertical and horizontal distance from the reference stake to the invert at the ends of the culvert.

(3) Station of actual point where culvert intersects centerline.

When required, stake headwall for culverts by setting a hub with a guard stake on each side of the culvert on line with the face of the headwall. Perform this work after clearing is completed.

152.03 (l) Miscellaneous Survey and Staking.

Add the following:

(11) Cattleguards

(12) Drain Dips

(13) Erosion Control Measures

Replace Table 152-1 with the following two tables:

Table 152-1 Tolerances for reestablishing P-line, traverse, and elevations.

Precision Class	Minimum Position Closure	Angular Accuracy (±)	L-Line Tangent Control Points[a] (±)	Vertical Closure[b] (±)
A (Bridges)	1/10,000	2 sets, direct/reverse 10 second rejection limit	N/A	0.02 ft or 0.02ft/1000ft[c]
B	1/5,000	2 sets, direct/reverse 20 second rejection limit	0.1 ft	0.02 ft or 0.02ft/1000ft[c]
C	1/1,000	1 set, direct/reverse 1 minute rejection limit	0.2 ft	0.5ft/1000ft[c]
D	1/300	Foresight and backsight; 15 minute rejection limit[c]	0.4 ft	1.0ft/1000ft[c]
E	1/100	Foresight and backsight; 30 minute rejection limit[c]	0.8 ft	1.0ft/1000ft[c]

a. Accuracy of offset measurement.

b. Determine vertical closures at intervals not to exceed 2000 ft as measured along centerline.

c. Use greater value.

Table 152-2 Cross section and slope stake tolerances.

Item	Tolerances				
	A	B	C	D	E
Allowable deviation of cross-section line projection from a true perpendicular to tangents, a true bisector of angle points, or a true radius of curves	(±)2°	(±)3°	(±)3°	(±)5°	(±)5°
Take cross-sections topography measurements so that variations in ground from a straight line connecting the cross-section points will not exceed	0.5 ft	1.0 ft	2.0 ft	2.0 ft	3.0 ft
Horizontal and vertical accuracy for cross-sections, in feet or percentage of horizontal distance measured from traverse line, whichever is greater.	0.1 ft or 0.4%	0.15 ft or 0.6%	0.2 ft or 1.0%	0.2 ft or 1.0%	0.3 ft or 1.0%
Horizontal and vertical accuracy for slope stake, slope stake references, and clearing limits. In feet or percentage of horizontal distance measured from centerline or reference stake, whichever is greater.					
Slope reference stakes and slope stakes.	0.1 ft or 0.4%	0.15 ft or 0.6%	0.2 ft or 1.0%	0.2 ft or 1.0%	0.3 ft or 1.0%
Clearing limits	1.0 ft	1.0 ft	1.0 ft	1.5 ft	2.5 ft

153 - Contractor Quality Control

153.04_nat_us_10_24_2007

153.04 Records.

Delete all but the first sentence

155 - Schedules for Construction Contracts

155.00_nat_us_05_11_2004

155 Delete.

Delete Section 155 in its entirety.

156 - Public Traffic

156.00_nat_us_04_17_2007

Delete Section 156 in its entirety and replace with the following:

Description

156.01 This work consists of controlling and protecting public traffic adjacent to and within the project.

Material

156.02 Conform to the MUTCD and the following Sections and Subsections:

Construction sign panels	633
Retro-reflective sheeting	718.01
Temporary concrete barrier	618
Temporary plastic fence	710.11
Temporary traffic control devices	718.22

156.03 General. Unless otherwise provided for in Table 156-1, keep existing roads open to all traffic during road improvement work, and maintain them in a condition that will adequately accommodate traffic. Delays may not exceed 10 minutes at any one time followed by an open period of no less than 30 minutes.

Perform no work that interferes or conflicts with traffic or existing access to the roadway surface until a traffic control plan has been approved. Post construction signs and traffic control devices in conformance with MUTCD. All required signs will be in place and approved prior to beginning work on project.

If the Contractor agrees in writing to allow public traffic to use a new road being constructed prior to completion, it will be considered an existing road for traffic control purposes.

156.04 Temporary Traffic Control. Install and maintain temporary traffic control devices adjacent to and within the project as required by the approved traffic control plan and the MUTCD. Install and maintain traffic control devices as follows:

Furnish and install traffic control devices before the start of construction operations.

(a) All detours outside of clearing limits will be approved in writing by the Contracting Officer as part of the traffic control plan.
(b) Install only those traffic control devices needed for each stage or phase.
(c) Relocate temporary traffic control devices as necessary.
(d) Remove devices that no longer apply to the existing conditions.
(e) Immediately replace any device that is lost, stolen, destroyed, or inoperative.
(f) Keep temporary traffic control devices clean.
(g) Remove all temporary traffic control devices upon contract completion or when approved.
(h) When required, use flaggers certified by the American Traffic Safety Services Association, the National Safety Council, the International Municipal Signal Association, a state agency, or other acceptable organization. Perform the work described under MUTCD Part 6. Use type III, VII, VIII, or IX retroreflective sheeting on flagger paddles. Do not use flags. Flaggers must wear high visibility safety apparel as required by MUTCD 6E.02.

156.05 Temporary Closures. Road segments may be closed as shown in Table 156-1. The maximum consecutive days of closure shall be followed by a minimum number of consecutive days open to traffic as shown. Maintain traffic control devices during closure period(s). Appropriate barricades and signs will be erected and maintained as shown in the traffic control plan or as otherwise designated.

Prior to closing roads during construction, give written notice to the Contracting Officer at least 10 days in advance.

Table 156-1

Temporary Road Closures

Road Number	From Terminus	To Terminus	Maximum Consecutive Days of Closure	Minimum Consecutive Days Open
5720*	0.00	2.36	5	2

*Road to remain open and safe to pass public traffic on all weekends and Federal Holidays.

156.06 Acceptance. Public traffic work will be evaluated under Subsection 106.02.

Measurement and Payment

156.07 Do not measure Public Traffic for payment. Compensation is made as an indirect payment.

156.03_nat_us_02_24_2005

156.03 Accommodating Traffic During Work.

Delete the following from the last paragraph:

according to Subsection 106.07(b)

156.04_nat_us_02_24_2005

156.04 Maintaining Roadways During Work.

(a) Add the following:

Do not construct detours outside of the clearing limits or use alternate route detours without the approval of the CO.

156.08_nat_us_02_24_2005

156.08 Traffic and Safety Supervisor.

Delete this subsection in its entirety.

157 - Soil Erosion Control

157.00_01_us_10_10_2006

157.02 Materials

Add the following:

Provide bales, wattles, logs and rolls from a certified noxious weed free source.

157.03 General.

Delete the first two paragraphs and replace with the following:

Prepare, file and submit storm water permits as required by the State with jurisdiction, including payment of necessary fees. The storm water permits shall be for 1 outfalls.

Submit an Erosion Control Plan detailing permanent and temporary control measures to minimize erosion and sedimentation during and after construction in accordance with the plans and storm water permits. Do not modify the type, size, or location of any control or practice without approval. Submit the erosion control plan proposal at least 7 days before operations begin to the CO for approval.

Reflect in the Erosion Control Plan special concerns and measures necessary to protect resources and government improvements. Include:

(a) The construction activities and sequence of implementation relating to specific erosion control measures.
(b) The location and type of permanent controls to be implemented during construction.
(c) The location and type of temporary controls to be implemented during construction.
(d) For work in stream channels with running water a detailed dewatering plan.
(e) For work in stream channels without flowing water describe level of ground and vegetative disturbance and measures to reduce potential sediment delivery.
(f) Description of the monitoring plan.

Add the following to the third paragraph:

Upon completion of construction at the site, remove all temporary erosion control devices, dewatering materials and equipment from Government property.

157.08 Water Crossings.

Add the following:

At any channel crossing where there is running water, dewater by rerouting water flow around the site before and during excavation and embankment operations.

157.09 Diversions.

Delete the first sentence and replace with the following:

When shown on the plans, construct temporary channels, temporary culverts, or sandbags to divert water around disturbed areas and slopes. Earthen dams are prohibited.

157 - Soil Erosion Control

157.01_0618_us_02_03_2009

Description

157.01 Add the following:

This includes protection of all phases of work during the life of the contract including storm events.

Materials

157.02 Add the following:

Coarse Aggregate for Concrete...……703.02

Watertight Gaskets……..712.03

Construction Requirements

157.03 General. Add the following:

21 days prior to the start of construction, submit a written plan that provides specific sediment control measures to minimize delivery of soil and turbidity into the stream during the construction period including a channel diversion and dewatering plan if dewatering is required. Include the sequence of operations and information on equipment, materials and suppliers. Measures given in the Plans and Supplemental Specifications are minimum requirements, and may be revised only with written approval by the CO.

The turbidity of the water 100-200 feet downstream shall not be visually greater than the turbidity of the water upstream of the project site.

When this turbidity requirement or other erosion control measures are not met, immediately take corrective action. Cease operations that are causing turbidity and pump or otherwise improve the diversion of the stream around the construction site according to this specification and the Plans until the turbidity requirement can be met. When the interpretation of this requirement is in question, measure turbidity using a turbidity meter as approved by the CO, and provide documentation that operations are in compliance with FAR 52.236-7 Permits and Responsibilities, subsection 107.01 Laws to be Observed and subsection 107.10 Environmental Protection, and subsection 107.11, including but not limited to, the requirements of the National Marine Fisheries Service.

Do not begin work until the necessary controls for that particular phase of work have been implemented. Incorporate all erosion control features into the project at the earliest practicable time, as agreed by the CO.

Operate in a manner that will avoid harm to aquatic organisms whenever possible.

Notify the CO of the intention to dewater the stream, at least 10 days in advance. Do not re-route the stream until approved by the CO. The CO will not approve dewatering until a fisheries biologist and other Government personnel are present and prepared to rescue aquatic organisms. Dewater the stream slowly and incrementally in order to facilitate the fish rescue. The rescue operation will generally take several hours.

Do not release water through the newly constructed simulated streambed until approved by the CO. After approval, release water slowly and incrementally over a period of at least one hour, or as approved by the CO. During this time, treat any water that does not meet the requirements of the turbidity standard stated in this specification.

157.04 Controls and Limitations on Work. Add the following:

Prior to construction, Contracting Officer will delineate critical riparian vegetation areas, wetlands, and other sensitive sites to prevent ground disturbance. Minimize disturbance to existing vegetation along stream.

Where necessary, danger tree removal may be required. Fell danger trees within riparian areas. Where possible, fell trees towards the stream. Dispose of trees as directed by the Contracting Officer.

Confine work within the construction limits marked by the Contracting Officer. Use existing roadways or travel paths whenever reasonable. Minimize the number of new access paths.

Dispose of waste material at approved sites.

When erosion control materials are to be left on site after the project has been completed, construct erosion controls of organic and bio-degradable materials whenever possible.

157.04(b) Add the following:

For the work immediately adjacent to the stream, use sediment control barriers between the work and the stream. Place sediment barriers prior to construction around sites where significant levels of erosion may enter the stream directly or through road ditches.

Provide straw bales and silt fence for sediment control measures for each channel crossing being constructed concurrently. Use only as needed for sediment control or when specified by the Contracting Officer.

Provide waterproof membrane products to cover all stockpiled material adjacent to a live stream that is subject to erosion or water saturation. Cover stockpiles at the end of each work day and all day during the threat of precipitation or when specified by the Contracting Officer.

157.04(d) Delete the subsection and replace with the following:

Apply temporary turf establishment, mulch and stabilization measures on disturbed areas within three days of the last disturbance. Short-term stabilization measures may include the use of non-native sterile seed mix when native seeds are not available; weed-free certified straw, jute matting, and other similar techniques. Maintain short-term stabilization measures until permanent erosion control measures are effective.

157.04(f) Add the following:

When required by the Contracting Officer, loosen compacted areas, such as access roads, stream crossings, staging, and stockpile areas.

157.09 Diversions. Add the Following:

Construct stream diversion, related appurtenances and measures as follows:

(a) In Stream Work.

(1) Isolate construction area and coordinate with Contracting Officer for aquatic species removal by the Government. Coordinate aquatic species removal a minimum of 10 working days prior to beginning isolation of construction areas.

(2) Cease project operations under high flow conditions that inundate the project area, except for efforts to avoid or minimize resource damage.

(3) When approved, minimize time in which heavy equipment is in stream channels, riparian areas, and wetlands. Operate heavy equipment in streams only when Contracting Officer determines that such actions are the only reasonable alternative for implementation, or would result in less sediment in the stream channel or damage (short- or long-term) to the overall aquatic and riparian ecosystem relative to other alternatives.

(4) Clean and repair all equipment used in the in-stream work prior to entering the project area. Remove external oil and grease, along with dirt and mud, prior to construction. Inspect equipment daily for leaks or accumulations of grease, and repair any identified problems prior to entering streams or areas that drain directly to streams or wetlands.

(5) Fuel and service equipment used for in stream or riparian work in an approved staging area outside of riparian zone. When not in use, store vehicles in the staging area.

(b) Stream Bypass Dam and Pipe. Construct a dam of material handling bags, and bypass pipe as shown on the Plans or as approved by the CO. The mining of material from the streambed or floodplain to construct diversions is not permitted. If diversion allows for downstream aquatic species passage, (i.e., is not screened), place diversion outlet in a location to promote safe reentry of aquatic species into the stream channel, preferably into pool habitat with cover.

(1) Primary Bypass Dam. Construct the material handling bag dam in a dry condition by first pumping the stream around the dam. Place temporary cofferdams as needed. Remove rock and other irregularities from the streambed to form smooth bedding for the bypass dam.

Place the dam so that water does not seep from the downstream side of the dam; if seepage occurs, improve the dam by adding bags, improving or adding seals, or other means to minimize seepage from the dam. When it is impossible to eliminate seepage, construct a sump and pump clear water to the upstream side of the dam.

(2) Bypass Dam Impermeable Membrane. Place an impermeable membrane within or on the upstream side of the dam and entrenched in the streambed as shown on the Plans or approved by the CO. When approved by the CO, a small amount of granular bentonite may be used along the edges of the membrane to minimize seepage between the membrane and the streambed. Cut a hole in the membrane to fit the bypass pipe and seal the membrane to the bypass pipe or the bypass pipe collar using gaskets, adhesive strips or other approved methods.

(3) Bypass pipe. Place bypass pipe as shown on the Plans or approved by the CO. Place the upstream invert of the pipe at the lowest point in the stream channel as practical. Install joints and elbows as shown on the Plans and as needed to accommodate the site layout. Use watertight seals meeting the requirements of Subsection 712.03. Do not place backfill until the pipe joints have been approved by the CO. Allow water to pass through pipe only after a downstream splash apron has been prepared in a manner that will protect the stream from scour and turbidity, and protect fish from harm. Construct the bypass in a manner that avoids injury to aquatic organisms.

(4) Material handling bags. Use only clean sand or coarse concrete aggregate in the bags. Loosely fill and tamp the bags in place to minimize seepage between, under, and around the bags.

(5) Bypass Pipe Collar. Install and maintain a leak-proof pipe collar as shown on the Plans or approved by the CO.

(6) Sediment Retention Pond. Provide a pond immediately downstream of the construction area capable of collecting and holding all seepage, drainage, and sediment not captured in stream diversion. Provide sufficient storing capacity to enable a sump pump to transfer the water, sediment and turbidity to a suitable treatment facility or area. Construct a downstream cofferdam to create a sediment retention pond when none is available immediately downstream of the project, when it is too small to use or to prevent water from entering the work area.

(c) Pumps. Install pumps as required to re-route stream around construction site and dewater foundations. When failure of a pump would result in movement of sediment or turbidity beyond the work area, provide a back-up pump that is readily available. When adjacent stream crossing projects are constructed concurrently, provide a minimum of one extra pump on site for the largest discharge site. Use the pumps for installing and removing the gravity bypass pipes and dams, at other times to facilitate construction operations, and during storms to supplement the gravity bypass. Pumps must have fish screens if used in streams where aquatic species are present and be operated in accordance with National Marine Fisheries Service (NMFS) aquatic species screen criteria. Equip the pump with approved screens, appropriate suction and discharge hoses, fittings and flow regulation equipment as needed. Insure that the pumps are clean, free of leaks and that the oil used as lubricant in the pump seal systems is food grade mineral oil. Install and operate pumps in a manner that will avoid impingement of small fish against the intake screens.

(1) Pump intakes. Use one of the following methods of screening on all draft hoses:

i. Perforated Plate; screen openings shall not exceed 3/32 or 0.0938-inches

ii. Profile Bar Screen; the narrowest dimension in the screen openings shall not exceed 0.0689-inches in the narrowest direction.

iii. Woven Wire Screen; screen openings shall not exceed 3/32 or 0.0938-inches the narrow direction.

Check intakes frequently and clean as needed with wire brushing, flushing, or any other acceptable method.

(2) Sump Pumps. Supply pumps capable of dewatering the structure foundation and sediment retention pond. Insure that pumps are clean and free of leaks. Remove sediment and turbidity in the Sump Pump discharge water prior to re-entering the stream.

(d) Sump Water Discharge. Discharge sump water as shown on the Plan or as approved by the CO. Apply one or more methods to remove sediment from sediment-laden water. Apply additional methods as needed to eliminate increase in downstream turbidity. Use the following methods as needed:

(1) Natural Vegetation/Soil Dispersal and Filtration. Discharge sump water onto areas of ground most advantageous for dispersal and filtration of sediment, e.g. flat heavily vegetated soil. When single point discharge does not function adequately, discharge water into a perforated pipe or series of pipes laid approximately level so that the brown water disperses over a wide area.

(2) Silt Bag Filtration. Discharge sump water into one or more silt bags. Silt bags are constructed of Mirafi 180N (or approved equal) with sewn seam strengths of 90% efficiency according to ASTM D4632. Construct bag to hold and filter sump water. Place silt bag(s) on level ground having layer of straw one foot thick minimum.

(3) Settling Basin. Discharge sump water into one or more basins. The basins may be pre-manufactured tanks, folding tanks, geotextile or membranes placed over a sandbag or weed-free straw berm, or other similar basins designed to separate sediment from the water.

(4) Suspended Sediment Coagulation Agent. When other methods do not function adequately, add an approved coagulation agent to water prior to discharging the water onto natural vegetation, silt bag, or settling basin. Use a flocculation agent such as Chitisan-based Storm-Klear Gel-Floc, or approved equal. Use suspended sediment coagulation agent according to manufacturer's recommendations.

(e) Stream Re-Watering. Monitor downstream during rewatering to prevent stranding of aquatic organisms below the construction site. Ensure that concrete is sufficiently cured or dried before coming into contact with stream flow.

157.13 Maintenance & Cleanup. Add the following:

When removing sandbags, spread sand away from the waterway; if coarse concrete aggregate meeting the requirements of Subsection 703.02 is used in the sandbags, the gravel may be distributed evenly across the waterway.

Remove geotextile and other non-biodegradable materials used in dewatering and sediment control operations from Government property, unless otherwise approved by the CO.

170 - Develop Water Supply and Watering

170.00_0618_us_03_26_2007

Description

170.01 This work consists of developing an acceptable water supply, furnishing, hauling, and applying water.

Materials

170.02 Conform to the following subsection.

Water	725.01.

Construction Requirements

170.03 Development of Supply & Access. Develop water supplies and access to the water supplies as required. Use designated water sources or other approved water sources. Before using non-designated water sources, obtain all necessary permissions, water rights, and permits.

170.04 Equipment.

(a) Water tanks. Provide mobile watering equipment with watertight tanks of known capacity. Provide for positive control of water application from the driver's position.

(b) Juvenile fish protection. All draft hoses being used to withdraw water from any live flowing stream or pond will utilize one of the following methods of screening.

(1) Perforated plate: Screen opening shall not exceed 3/32 or 0.0938-inches.

(2) Profile bar screen: The narrowest dimension in the screen openings shall not exceed 0.0689-inches in the narrowest direction.

(3) Woven wire screen: Screen openings shall not exceed 3/32 or 0.0938-inches in the narrow direction.

All methods shall be cleaned frequently with either wire brushing, flushing or other acceptable method.

170.05 Application. Apply water uniformly without ponding or washing.

170.06 Acceptance. Developing water supplies and watering will be evaluated under Subsections 106.02 and 106.04.

Measurement and Payment

170.07 See Subsection 109.05.

Do not measure develop water supply and watering for payment.

Construction Requirements

170.03 Development of Supply & Access. Develop water supplies and access to the water supplies as required. Use designated water sources or other approved water sources. Before using non-designated water sources, obtain all necessary permissions, water rights, and permits.

170.04 Equipment. Provide mobile watering equipment with watertight tanks of known capacity. Provide for positive control of water application from the driver's position.

170.05 Application. Apply water uniformly without ponding or washing.

170.06 Acceptance. Developing water supplies and watering will be evaluated under Subsections 106.02 and 106.04.

Measurement

170.07 Measure the Section 170 items listed in the bid schedule according to Subsection 109.02.

Payment

170.08 The accepted quantities will be paid at the contract price per unit of measurement for the Section 170 pay items listed in the bid schedule. Payment will be full compensation for the work prescribed in this Section. See Subsection 109.05.

201 - Clearing and Grubbing

201.01_nat_us_02_18_2005

201.01 Description

Replace with the following

This work consists of clearing and grubbing within clearing limits and other designated areas.

201.00_nat_us_08_05_2009

201.02 Material:

Delete Tree wound dressing material reference.

201.03 General.

Delete the last sentence.

201.04 Clearing.

Delete the last sentence of (d).

201.04_nat_us_02_18_2005

201.04 Clearing.

Add the following:

When marked in advance, remove dead trees over 6 inches in diameter measured at 12 inches above the ground that lean toward the road and are tall enough to reach the roadbed.

201.04_nat_us_02_22_2005

201.04 Clearing. (c)

Delete paragraph (c) and replace with the following:

> (c) In areas outside the excavation, embankment, and slope rounding limits, cut stumps to within 12 inches or one-third of the stump diameter of the ground, whichever is higher, measured on the side adjacent to the highest ground. For timber sales, stump heights will meet the requirements of the Timber Sale contract.

201.04 Clearing.

Delete subsection (d) and replace with the following:

(d) Do not cut vegetation less than 3 feet tall and less than 3 inches in diameter, that is within the clearing limits but beyond the roadway and not in a decking area, and that does not interfere with sight distance along the road.

Add the following:

(e) Trim branches of remaining trees or shrubs to give a clear height of 14 feet above the roadbed unless otherwise indicated. Trim tree limbs as near flush with the trunk as practicable.

(f) Remove brush from log decks. Deck logs so that logs are piled parallel to one another; can be removed by standard log loading equipment; will not damage standing trees; will not interfere with drainage, and will not roll. Keep logs in log decks free of brush and soil.

201.06_nat_us_02_18_2005

201.06 Disposal.

Delete the first sentence of this subsection and substitute the following:

Dispose of merchantable timber designated for removal according to the provisions of the timber sale contract.

203 - Removal of Structures and Obstructions

203.01_nat_us_02_25_2005

203.01 Description.

Delete and replace with the following:

This work consists of disposing of construction slash and debris, salvaging, removing, and disposing of buildings, fences, structures, pavements, culverts, utilities, curbs, sidewalks, and other obstructions.

203.04_nat_us_03_26_2007

203.04 Removing Material.

Replace the fourth and fifth paragraphs with the following:

Where part of an existing culvert is removed, remove the entire culvert upstream from the removal. The remaining downstream culvert may be left in place if no portion of the culvert is within 12 inches of the subgrade, embankment slope, or new culvert or structure; and the culvert ends are sealed with concrete.

Remove structures and obstructions in the roadbed to 12 inches below subgrade elevation. Remove structures and obstructions outside the roadbed to 12 inches below finished ground or to the natural stream bottom.

203.05_0618_us_03_26_2007

203.05 Disposing of Material

(a) Remove from project.

Delete the last two sentences

203.05_0618_us_03_26_2007

203.05 Disposing of Material.

Add the following:

(e) Windrowing Construction Slash. Place construction slash outside the roadway in neat, compacted windrows approximately parallel to and along the toeline of embankment slopes. Do not permit the top of the windrows to extend above subgrade. Use construction equipment to matt down all material in a windrow to form a compact and uniform pile. Construct breaks of at least 15 feet at least every 200 feet in a windrow. Do not place windrows against trees. Obtain approval for pioneer roads. A pioneer road may be constructed to provide an area for placement of windrows, provided the excavated material is kept within the clearing limits and does not adversely affect the road construction.

(f(1)) Scattering method outside clearing limits. Scatter construction slash outside the clearing limits without damaging trees. Limb all logs. Place logs and stumps away from trees, positioned so they will not roll, and are not on top of one another. Limb and scatter other construction slash to reduce slash concentrations.

(f(2)): Scattering method inside clearing limits. Scatter pieces of wood less than 3 inches in diameter and 3 feet in length within the clearing limits. Do not place construction slash in lakes, meadows, streams, or streambeds. Immediately remove construction slash that interferes with drainage structures.

(g) Chipping or Grinding. Use an approved chipping machine to grind slash greater than 3 inches in diameter and longer than 3 feet. Deposit chips or ground woody material on embankment slopes or outside the roadway to a loose depth less than 6 inches. Minor amounts of chips or ground woody material may be permitted within the roadway if they are thoroughly mixed with soil and do not form a layer.

(h) Debris Mat. Use tree limbs, tops, cull logs, split stumps, wood chunks, and other debris to form a mat upon which construction equipment is operated. Place stumps upside down and blend stumps into the mat.

(i) Decking Firewood Material. Remove brush from decks. Limb and deck logs that do not meet Utilization Standards according to Subsection 201.04 as directed by the CO. Cut logs to lengths less than 30 feet. Ensure that logs stacks are stable and free of brush and soil.

(j) Removal to designated locations. Remove construction slash to designated locations.

(k) Piling. Pile construction slash in designated areas. Place and construct piles so that if the piles are burned, the burning will not damage remaining trees. Keep piles free of dirt from stumps. Cut unmerchantable logs into lengths of less than 20 feet.

(l) Placing Slash on Embankment Slopes. Place construction slash on completed embankment slopes to reduce soil erosion. Place construction slash as flat as practicable on the completed slope. Do not place slash closer than 2 feet below subgrade. Priority for use of available slash is for: (1) through fills; (2) insides of curves; and (3) ditch relief outlets.

(m) Hydrological Sensitive Placement. Where required use this method in combination with other designated methods to dispose of material to reduce erosion and to aid in re-vegetation:

1. Place windrow segments on contours, wrap in type I geotextile.
2. Place logs as log erosion barriers on contours. Place logs so that 80% of their length is on the ground surface.
3. Scatter slash on bare or disturbed areas within or outside the clearing limits as directed.
4. Scatter chips or ground woody material on bare or disturbed areas within or outside the clearing limits as directed.

Place stumps in swales or on sites to form planting pockets. Place windrow segments on contours, wrap in type I geotextile.

204 - Excavation and Embankment

204.00_nat_us_03_26_2009

Replace Section 204 in its entirety with the following:

Description

204.01 This work consists of excavating material and constructing embankments. This includes furnishing, hauling, stockpiling, placing, disposing, sloping, shaping, compacting, and finishing earthen and rocky material.

204.02 Definitions.

(a) Excavation. Excavation consists of the following:

(1) Roadway excavation. All material excavated from within the right-of-way or easement areas, except subexcavation covered in (2) below and structure excavation covered in Sections 208 and 209. Roadway excavation includes all material encountered regardless of its nature or characteristics.

(2) Subexcavation. Material excavated from below subgrade elevation in cut sections or from below the original groundline in embankment sections. Subexcavation does not include the work required by Subsections 204.05, 204.06(b), and 204.06(c).

(3) Borrow excavation. Material used for embankment construction that is obtained from outside the roadway prism. Borrow excavation includes unclassified borrow, select borrow, and select topping.

(b) Embankment construction. Embankment construction consists of placing and compacting roadway or borrow excavation. This work includes:

(1) Preparing foundation for embankment;
(2) Constructing roadway embankments;
(3) Benching for side-hill embankments;
(4) Constructing dikes, ramps, mounds, and berms; and
(5) Backfilling subexcavated areas, holes, pits, and other depressions.

(c) Conserved topsoil. Excavated material conserved from the roadway excavation and embankment foundation areas that is suitable for growth of grass, cover crops, or native vegetation.

(d) Waste. Excess and unsuitable roadway excavation and subexcavation that cannot be used.

Material

204.03 Conform to the following Subsections:

Backfill material	704.03

Select borrow	704.07
Select topping	704.08
Topping	704.05
Unclassified borrow	704.06
Water	725.01

Construction Requirements

204.04 Preparation for Roadway Excavation and Embankment Construction. Clear the area of vegetation and obstructions according to Sections 201 and 203.

204.05 Reserved.

204.06 Roadway Excavation. Excavate as follows:

(a) General. Do not disturb material and vegetation outside the construction limits.
Incorporate only suitable material into embankments. Replace any shortage of suitable material caused by premature disposal of roadway excavation. Dispose of unsuitable or excess excavation material according to Subsection 204.14.

At the end of each day's operations, shape to drain and compact the work area to a uniform cross-section. Eliminate all ruts and low spots that could hold water.

Retrieve material deposited outside of the clearing limits as directed by the CO. Place unsuitable material in designated areas.

(b) Rock cuts. Blast rock according to Section 205. Excavate rock cuts to 6 inches below subgrade within the roadbed limits. Backfill to subgrade with topping or with other suitable material. Compact the material according to Subsection 204.11

(c) Earth cuts. Scarify earth cuts to 6 inches below subgrade within the roadbed limits. Compact the scarified material according to Subsection 204.11.

(d) Pioneer Roads. Road pioneering, slash disposal, and grubbing of stumps may proceed concurrently with excavation. Conduct excavation and placement operations so material to be treated under Section 201 will not be incorporated into the roadway unless specified in the slash treatment method. Maintain drainage during pioneering operations.

Remove snow and ice in advance of the work and deposit beyond the roadway limits in a manner that will not waste material or generate sediment. Do not incorporate snow and ice into embankments. Place snow or ice in a manner to prevent resource damage.

204.07 Subexcavation. Excavate material to the limits designated by the CO. Take cross-sections according to Section 152. Prevent unsuitable material from becoming mixed with the backfill. Dispose of unsuitable material according to Subsection 204.14. Backfill the subexcavation with topping, or other suitable material. Compact the material according to Subsection 204.11.

204.08 Borrow Excavation. Use all suitable roadway excavation in embankment construction. Do not use borrow excavation when it results in excess roadway excavation. Deduct excess borrow excavation from the appropriate borrow excavation quantity.

Obtain borrow source acceptance according to Subsection 105.02. Develop and restore borrow sources according to Subsection 105.03. Do not excavate beyond the established limits. When applicable, shape the borrow source to permit accurate measurements when excavation is complete.

204.09 Preparing Foundation for Embankment Construction. Prepare foundation for embankment construction as follows:

(a) Embankment less than 4 feet high over natural ground. When designated, remove topsoil and break up the ground surface to a minimum depth of 6 inches by plowing or scarifying. Compact the ground surface according to Subsection 204.11.

(b) Embankments over an existing asphalt, concrete, or gravel road surface. Scarify gravel roads to a minimum depth of 6 inches. Scarify or pulverize asphalt and concrete roads to 6 inches below the pavement. Reduce all particles to a maximum size of 6 inches and produce a uniform material. Compact the surface according to Subsection 204.11.

(c) Embankment across ground not capable of supporting equipment. Dump successive loads of embankment material in a uniformly distributed layer to construct the lower portion of the embankment. Limit the layer thickness to the minimum depth necessary to support the equipment.

(d) Embankment on an existing slope steeper than 1V:3H. Cut horizontal benches in the existing slope to a sufficient width to accommodate placement and compaction operations and equipment. Bench the slope as the embankment is placed and compacted in layers. Begin each bench at the intersection of the original ground and the vertical cut of the previous bench.

204.10 Embankment Construction. Incorporate only suitable roadway excavation material into the embankment. When the supply of suitable roadway excavation is exhausted, furnish unclassified borrow to complete the embankment. Obtain written approval before beginning construction of embankments over 6 feet high at subgrade centerline. Construct embankments as follows:

(a) General. At the end of each day's operations, shape to drain and compact the embankment surface to a uniform cross-section. Eliminate all ruts and low spots that could hold water.

During all stages of construction, route and distribute hauling and leveling equipment over the width and length of each layer of material.

Compact embankment side slopes flatter than 1V:1.75H with a tamping type roller or by walking with a dozer. For slopes 1V:1.75H or steeper, compact the slopes as construction of the embankment progresses.

Where placing embankment on one side of abutments, wing walls, piers, or culvert headwalls, compact the material using methods that prevent excessive pressure against the structure.

Where placing embankment material on both sides of a concrete wall or box structure, conduct operations so compacted embankment material is at the same elevation on both sides of the structure.

Where structural pilings are placed in embankment locations, limit the maximum particle size to 4 inches.

(b) Embankment within the roadway prism. Place embankment material in horizontal layers not exceeding 12 inches in compacted thickness. Incorporate oversize boulders or rock fragments into the

12-inch layers by reducing them in size or placing them individually as required by (c) below. Compact each layer according to Subsection 204.11 before placing the next layer.

Material composed predominately of boulders or rock fragments too large for 12-inch layers may be placed in layers up to 24 inches thick. Incorporate oversize boulders or rock fragments into the 24-inch layer by reducing them in size or placing them individually according to (c) below. Place sufficient earth and smaller rocks to fill the voids. Compact each layer according to Subsection 204.11 before placing the next layer.

(c) Individual rock fragments and boulders. Place individual rock fragments and boulders greater than 24 inches in diameter as follows:

(1) Reduce rock to less than 48 inches in the largest dimension.
(2) Distribute rock within the embankment to prevent nesting.
(3) Place layers of embankment material around each rock to a depth not greater than that permitted by (b) above. Fill all the voids between rocks.
(4) Compact each layer according to Subsection 204.11 before placing the next layer.

(d) Embankment outside of roadway prism. Where placing embankment outside the staked roadway prism, place material in horizontal layers not exceeding 24 inches in compacted thickness. Compact each layer according to Subsection 204.11.

204.11 Compaction. Compact the embankment using one of the following methods as specified:

(a) <u>Compaction A.</u> Use AASHTO T 27 to determine the amount of material retained on a Number 4 sieve. If there is more than 80 percent retained on the No. 4 sieve use procedure (1). If there is 50 to 80 percent retained on the No. 4 sieve use procedure (2). If there is less than 50 percent retained on the No. 4 sieve use procedure (3).

(1) Adjust the moisture content to a level suitable for compaction. Fill the interstices around rock with earth or other fine material as practical. Use compression-type rollers at speeds less than 6feet per second and vibratory rollers at speeds less than 3 feet per second. Compact each layer of material full width with one of the following and until there is no visible evidence of further consolidation.

(a) Four roller passes of a vibratory roller having a minimum dynamic force of 40,000 pounds impact per vibration and a minimum frequency of 1000 vibrations per minute.
(b) Eight roller passes of a 20-ton compression-type roller.
(c) Eight roller passes of a vibratory roller having a minimum dynamic force of 30,000 pounds impact per vibration and a minimum frequency of 1000 vibrations per minute.

Increase the compactive effort for layers deeper than 12 inches as follows:

- For each additional 6 inches or fraction thereof, increase the number of roller passes in (a) above by four passes.
- For each additional 6 inches or fraction thereof, increase the number of roller passes in (b) and (c) above, by eight passes.

(2) Use AASHTO T 99 to determine the optimum moisture content of the portion of the material passing a No. 4 sieve. Multiply this number by the percentage of material passing a No. 4 sieve, and add 2 percent to determine the optimum moisture content of the material. Adjust the moisture content of material classified A-1 through A-5 to a moisture content suitable for compaction. Adjust the

moisture content of material classified A-6 and A-7 to within 2 percent of the optimum moisture content.

Use compression-type rollers at speeds less than 6 feet per second and vibratory rollers at speeds less than 3 feet per second. Compact each layer of material full width according to (1) above.

(3) Classify the material according to AASHTO M 145. For material classified A-1 or A-2-4, determine the maximum density according to AASHTO T 180, method D. For other material classifications, determine the optimum moisture content and maximum density according to AASHTO T 99, method C.

Adjust the moisture content of material classified A-1 through A-5 to a moisture content suitable for compaction. Adjust the moisture content of material classified A-6 and A-7 to within 2 percent of the optimum moisture content.

Use compression-type or vibratory rollers. Compact each layer of material full width to at least 95 percent of the maximum density. Determine the in-place density and moisture content according to AASHTO T 310 or other approved test procedures. When required, use AASHTO T 224 to correct for coarse particles.

(b) Compaction B. Place material by end dumping to the minimum depth needed for operation of spreading equipment. Adjust the moisture content of the material to obtain a mass that will not visibly deflect under the load of the hauling and spreading equipment. Operate compaction equipment over the full width of each layer until there is no visible evidence of further consolidation or, if when a sheepsfoot roller is used, the roller "walks out" of the layer. Make at least three complete passes.

(c) Compaction C. Place material by end dumping to the minimum depth needed for operation of spreading equipment. Level and smooth each embankment layer before placing the next layers. Operate hauling and spreading equipment uniformly over the full width of each layer. Construct a solid embankment with adequate compaction by working smaller rock and fines in with the larger rocks to fill the voids, and by operating hauling and spreading equipment uniformly over the full width of each layer as the embankment is constructed.

204.12 Ditches. Slope, grade, and shape ditches. Remove all projecting roots, stumps, rock, or similar matter. Maintain all ditches in an open condition and free from leaves, sticks, and other debris.

Form furrow ditches by plowing or using other acceptable methods to produce a continuous furrow. Place all excavated material on the downhill side so the bottom of the ditch is approximately 18 inches below the crest of the loose material. Clean the ditch using a hand shovel, ditcher, or other suitable method. Shape to provide drainage without overflow.

204.13 Sloping, Shaping, and Finishing. Complete slopes, ditches, culverts, riprap, and other underground minor structures before placing aggregate courses. Slope, shape, and finish as follows:

(a) Sloping. Leave all earth slopes with uniform roughened surfaces, except as described in (b) below, with no noticeable break as viewed from the road. Except in solid rock, round tops and bottoms of all slopes including the slopes of drainage ditches. Round material overlaying solid rock to the extent practical. Scale all rock slopes. Slope rounding is not required on tolerance class D though M roads.

If a slide or slipout occurs on a cut or embankment slope, remove or replace the material, and repair or restore all damage to the work. Bench or key the slope to stabilize the slide. Reshape the cut or embankment slope to an acceptable condition.

(b) Stepped slopes. Where required by the contract, construct steps on slopes of 1⅓V:1H to 1V:2H. Construct the steps approximately 18 inches high. Blend the steps into natural ground at the end of the cut. If the slope contains nonrippable rock outcrops, blend steps into the rock. Remove loose material found in transitional area. Except for removing large rocks that may fall, scaling stepped slopes is not required.

(c) Shaping. Shape the subgrade to a smooth surface and to the cross-section required. Shape slopes to gradually transition into slope adjustments without noticeable breaks. At the ends of cuts and at intersections of cuts and embankments, adjust slopes in the horizontal and vertical planes to blend into each other or into the natural ground.

(d) Finishing. Finish the roadbed to be smooth and uniform, and shaped to conform to the typical sections. Remove unsuitable material from the roadbed and replace it with suitable material. Finish roadbeds to the tolerance class shown in table 204-2.Ensure that the subgrade is visibly moist during shaping and dressing. Scarify to 6 inches below the bottom of low sections, holes, cracks, or depressions and bring back to grade with suitable material. Maintain proper ditch drainage.

For surfaced roads, remove all material larger than 6 inches from the top 6 inches of the roadbed.

For unsurfaced roads, use one of the following methods to finish the roadbed:

(1) **Method A**. Remove all material larger than 6 inches from the top 6 inches of the roadbed and replace with suitable material.
(2) **Method B**. Use a vibratory grid roller or approved equal with a minimum weight of 10 tons. Roll at least 5 full-width passes or until there is no visible evidence of further consolidation.
(3) **Method C**. For roads designated as Construction Tolerance Class K, L, or M, finish the roadbed by spreading the excavation. Eliminate rock berms.

204.14 Disposal of Unsuitable or Excess Material. Dispose of unsuitable or excess material at designated sites or legally off of the project.

When there is a pay item for waste, shape and compact the waste material in its final location. Do not mix clearing or other material not subject to payment with the waste material.

204.15 Acceptance. See Table 204-1 for sampling and testing requirements.

Material for embankment and conserved topsoil will be evaluated under Subsections 106.02 and 106.04.

Excavation and embankment construction will be evaluated under Subsections 106.02 and 106.04.

Clearing and removal of obstructions will be evaluated under Sections 201 and 203.

Measurement

204.16 Measure the Section 204 items listed in the bid schedule according to Subsection 109.02 and the following as applicable.

(a) Roadway excavation. Measure roadway excavation in its original position as follows:

(1) Include the following volumes in roadway excavation:
(a) Roadway prism excavation;
(b) Rock material excavated and removed from below subgrade in cut sections;
(c) Unsuitable material below subgrade and unsuitable material beneath embankment areas when a pay item for subexcavation is not shown in the bid schedule;
(d) Ditches, except furrow ditches measured under a separate bid item;
*(e*Topsoil;
(f) Borrow material used in the work when a pay item for borrow is not shown in the bid schedule;
(g) Loose scattered rocks removed and placed as required within the roadway;
(h) Conserved material taken from stockpiles and used in Section 204 work; and
(i) Slide and slipout material not attributable to the Contractor's method of operation.

(2) Do not include the following in roadway excavation:
(a) Overburden and other spoil material from borrow sources;
(b) Overbreakage from the backslope in rock excavation;
(c) Water or other liquid material;
(d) Material used for purposes other than required;
(e) Roadbed material scarified in place and not removed;
(f) Material excavated when stepping cut slopes;
(g) Material excavated when rounding cut slopes;
(h) Preparing foundations for embankment construction;
(i) Material excavated when benching for embankments;
(j) Slide or slipout material attributable to the Contractor's method of operation;
(k) Conserved material taken from stockpiles constructed at the option of the Contractor; and
(l) Material excavated outside the established slope limits.

(3) When both roadway excavation and embankment construction pay items are shown in the bid schedule, measure the following as roadway excavation only:
(a) Unsuitable material below subgrade in cuts and unsuitable material beneath embankment areas when a pay item for subexcavation is not shown in the bid schedule;
(b) Slide and slipout material not attributable to the Contractor’s method of operations; and
(c) Drainage ditches, channel changes, and diversion ditches.

(b) Unclassified borrow, select borrow, and select topping. When measuring by the cubic yard measure in its original position. If borrow excavation is measured by the cubic yard in place, take initial cross-sections of the ground surface after stripping overburden. Upon completion of excavation and after the borrow source waste material is returned to the source, retake cross-sections before replacing the overburden.
Do not measure borrow excavation used in place of excess roadway excavation.

(c) Embankment construction. Measure embankment construction in its final position. Do not make deductions from the embankment construction quantity for the volume of minor structures.

(1) Include the following volumes in embankment construction:
(a) Roadway embankments;
(b) Material used to backfill subexcavated areas, holes, pits, and other depressions;

(c) Material used to restore obliterated roadbeds to original contours; and
(d) Material used for dikes, ramps, mounds, and berms.

(2) Do not include the following in embankment construction:
(a) Preparing foundations for embankment construction;
(b) Adjustments for subsidence or settlement of the embankment or of the foundation on which the embankment is placed; and
(c) Material used to round fill slopes.

(d) Rounding cut slopes. Measure rounding cut slopes horizontally along the centerline of the roadway if a pay item for slope rounding is included in the bid schedule. If a pay item for slope rounding is not included in the bid schedule slope rounding will be considered subsidiary to excavation.

(e) Waste. Measure waste by the cubic yard in its final position. Take initial cross-sections of the ground surface after stripping over burden. Upon completion of the waste placement, retake cross-sections before replacing overburden.

(f) Slope scaling. Measure slope scaling by the cubic yard in the hauling vehicle.

Payment

204.17 The accepted quantities will be paid at the contract price per unit of measurement for the Section 204 pay items listed in the bid schedule. Payment will be full compensation for the work prescribed in this Section. See Subsection 109.05.

Table 204-1
Sampling and Testing Requirements

Material or Product	Type of Acceptance (Subsection)	Characteristic	Category	Test Methods Specifications	Sampling Frequency	Point of Sampling	Split Sample	Reporting Time
Topping (704.05) & unclassified borrow (704.06)	Measured and tested for conformance (106.04)	Classification	—	AASHTO M 145	1 per soil type	Processed material before incorporating in work	Yes, when requested	Before using in work
		Moisture-density	—	AASHTO T 180, method D(1) or T 99, method C(1)	1 per soil type but not less than 1 per	"	"	"
		Compaction	—	AASHTO T 310 or other approved procedures	1 per 6000 yd^2 but not less than 1 per layer	In-place	—	Before placing next layer
Select borrow (704.07 & Select topping (704.08)	Measured and tested for conformance (106.04)	Classification	—	AASHTO M 145	1 per soil type but not less than 1 for each day of production	Processed material before incorporating	Yes, when requested	Before using in work
		Gradation	—	AASHTO T 27	"	"	"	"
		Liquid limit	—	AASHTO T 89	"	"	"	"
		Moisture-density	—	AASHTO T 180, method D(1) or T 99, method C(1)	1 per soil type but not less than 1 per	"	"	"
		Compaction	—	AASHTO T 310 or other approved procedures	1 per 6000 yd^2 but not less than 1 per layer	In-place	—	Before placing next layer

(1) Minimum of 5 points per proctor

Table 204-1 (continued)
Sampling and Testing Requirements

Material or Product	Type of Acceptance (Subsection)	Characteristic	Category	Test Methods Specifications	Sampling Frequency	Point of Sampling	Split Sample	Reporting Time
Earth embankment (204.11, Compaction A)	Measured and tested for conformance (106.04)	Classification	—	AASHTO M 145	1 per soil type	Source of Material	Yes, when requested	Before using in work
		Moisture-density	—	AASHTO T 180, method D[(1)] or T 99, method C[(1)]	1 per soil type but not less than 1 per 13,000 yd^3	"	"	"
		Compaction	—	AASHTO T 310 or other approved procedures	1 per 3500 yd^2 but not less than 1 per layer	In-place	—	Before placing next layer
Top of subgrade (204.11 Compaction A)	Measured and tested for conformance (106.04)	Compaction	—	AASHTO T 310 or other approved procedures	1 per 2500 yd^2	In-place	—	Before placing next layer

(1) Minimum of 5 points per proctor.

Table 204-2
Construction Tolerances

	Tolerance Class [a]												
	A	**B**	**C**	**D**	**E**	**F**	**G**	**H**	**I**	**J**	**K**	**L**	**M**
Roadbed width (ft)	+0.5	+0.5	+1.0	+1.0	+1.0	+1.0	+1.5	+1.0	+2.0	+2.0	+2.0	+2.0	+2.0
Subgrade elevation (ft)	±0.1	±0.2	±0.2	±0.5	±0.5	±1.0	±1.0	±1.5	±2.0	±3.0	±2.0	±3.0	(c)
Centerline alignment (ft)	±0.2	±0.2	±0.5	±0.5	±1.0	±1.0	±1.5	±1.5	±2.0	±3.0	±3.0	±5.0	(c)
Slopes, excavation, and embankment (% slope[b])	±3	±5	±5	±5	±5	±5	±10	±10	±10	±10	±20	±20	±20

(a) Maximum allowable deviation from construction stakes and drawings.
(b) Maximum allowable deviation from staked slope measured from slope stakes or hinge points.
(c) Unless otherwise shown the centerline alignment and subgrade elevation, as built, have no horizontal curves with a radius of less than 80 feet, and no vertical curves with a curve length of less than 80 feet when the algebraic difference in the grade change is less than 10 percent, or a curve length of less than 100 feet when the algebraic difference of the grade change is greater than or equal to 10 percent. The centerline grade is not to exceed 20 percent in 100 feet of length.

209 - Structure Excavation and Backfill

209.00_01_us_10_11_2006

209.07 Dewatering

Delete the subsection and add the following:

Submit a Dewatering Plan 5 days prior to beginning excavation.

Construct diversion prior to performing any excavation. Construct diversions using water tight, non-eroding methods. Employ settling basins or other methods so that muddy water is not returned to stream. Install, operate, and remove diversions in a manner that minimizes erosion and sedimentation.

209.10 Backfill.

(a) General.

Add the following:

Replace any pipe that is distorted by more than 5 percent of nominal dimensions, or that is ruptured or broken.

Do not place or backfill pipe that meets any of the following conditions until the excavation and foundation have been approved in writing by the CO:

- Embankment height greater than 6 feet at subgrade centerline.
- Installation in a protected streamcourse.
- Round pipe with a diameter of 48 inches or greater.
- Pipe arches with a span of 50 inches or greater.
- Any box culvert of structure other than pipe culverts.

(b) Pipe Culverts.

(1) Pipe culverts with compacted backfill.

Add the following:

On each side of the pipe, excavate an area at least as wide as the diameter of the pipe. Backfill without damaging or displacing the pipe. Complete backfilling of the trench with suitable material.

209.11 Compacting.

Delete the subsection and add the following:

Compact backfill using designated compaction method A, B, C, or D:

Method A. Ensure that backfill density exceeds the density of the surrounding embankment.

Method B. Adjust the moisture content of the backfill material to a moisture content suitable for compaction. Compact each layer 6 inch layer with a minimum of three complete passes or until visual displacement ceases using a mechanical tamper, (wacker-packer type or approved equal). For compaction under sections 252, 254, 255, 257, 258 and 262 compact with a vibratory steel wheeled roller with a mass of at least 8 tons.

Method C. Compact each layer of backfill with a minimum of two passes with mechanical tamper, (wacker-packer type, or approved equal).

Method D. Determine optimum moisture content and maximum density according to AASHTO T 99 method C. Adjust the moisture content of the backfill material to a moisture content suitable for compaction. Compact material placed in all layers to at least 95 percent of the maximum density. Determine the in place density and moisture content according to AASHTO T 310 or other approved test procedures.

212 - Linear Grading

212.00_10_us_02_13_2008

Linear Grading

Delete the entire specification and replace it with the following:

Description

212.01 This work consists of reference staking drainage structures and control points, marking clearing limits outside units**,** clearing and grubbing, slash treatment, excavation and embankment, including haul and end haul**,** erosion control, material source development, turf establishment, to construct roadways and associated features within the specified alignment and grade tolerances**.**

Stake according to sections 152 and FSS 152.

Develop material sources according to section(s) 105, FSS 651, and the approved plan of operations for Pit Development.

Construction Requirements

212.02 Clearing & Disposal. Protect construction stakes and construction control markers. Remove or treat all trees, snags, downed timber, brush, and stumps within the clearing limits. Do not damage vegetation not designated for treatment.

Immediately remove slash deposited in stream courses.

Fell all dead trees that are outside the clearing limits and that lean toward the road and are tall enough to reach the roadbed.

Leave stumps outside grubbing limits with heights less than 12 inches or one-third of the stump diameter; whichever is greater, measured on the side adjacent to the highest ground. Leave felled trees outside the clearing limits in place, and treat them no further unless otherwise designated.

Utilization standards for merchantable timber are listed below. Fall and buck merchantable material into lengths not to exceed **41** feet. Pieces (logs) will be considered as meeting utilization standards when such pieces would have met Utilization Standards if bucking lengths were varied to include such material.

Minimum Utilization Standards

12 feet in Length

6 inches in Diameter (Inside Bark) at Small End

33-1/3 Net Scale in % of Gross for Saw log 50% Net Scale in % Gross for Utility

Do not cut vegetation less than 3 feet in height and less than 3 inches in diameter that is within the clearing limits but beyond the roadway and not in a decking area and that does not interfere with sight distance along the road.

Merchantable Timber

Dispose of merchantable timber designated for removal according to the provisions of the timber sale contract.

Unmerchantable Timber and Large Construction Slash

Chipping or Grinding. Use an approved chipping machine to grind slash greater than 3 inches in diameter and longer than 3 feet. Deposit chips or ground woody material on embankment slopes or outside the roadway to a loose depth less than 6 inches. Minor amounts of chips or ground woody material may be permitted within the roadway if they are thoroughly mixed with soil and do not form a layer.

212.03 Pioneering. Do not undercut the final back slope during pioneering operations. Deposit material inside the roadbed limits or designated locations. Do not restrict drainage.

212.04 Grubbing. Within the **roadway** limits remove stumps with less than **12** inches of cover.

212.05 Roadway Excavation & Embankment. Construct the roadbeds according to the applicable requirements of Section 204 except as modified herein. Construct the roadway to the required template. Protect backslopes from being undercut. Deposit material inside the roadbed limits or designated locations. Do not restrict drainage.

Blast rock according to Section 205 and FSS 205.06 and 205.08 Rock Blasting.

Areas requiring end haul and end haul disposal areas will be identified on ground and approved in advance and will be done according to FSS R10 204.14.

Place rocks that are too large to be incorporated in the embankment outside the traveled way on the downhill side so that they will not roll, obstruct drainage, or hinder roadbed use and maintenance. Maximum particle cannot exceed half the depth of embankment layer**.**

Place material by side casting and end dumping to a minimum depth needed for operation of spreading and hauling equipment and minimum depths as shown on typical cross- sections. Minimum embankment depth in areas where prepared ground surfaces are solid rock is 12 inches. Construct solid embankments with adequate compaction by working smaller rock and fines in with larger rocks to fill the voids.

Produce and use borrow material from **approved sources**, and remove and treat unsuitable or excess material.

Operate loaded hauling and spreading equipment uniformly over full width of each layer.

Leave slopes that are to be seeded in a roughened condition.

Use a crawler tractor with a dozer blade to shape and finish the roadbed. Provide for drainage of surface water, unless otherwise designated. Do not permit individual rocks in the roadbed to protrude more than 4 inches above the subgrade. A motor grader finish is not required.

Do not encroach on stream channels, wetlands, or extend beyond right-of-way or easement limits. Do not make alignment or profile grade adjustments that adversely affect drainage. Construct the roadbed within the following grading tolerances:

(a) Alignment (centerline). Alignment may be shifted a maximum of 20 feet slope distance left or right of the planned centerline. Proposed realignments greater than 20' slope distance must be approved in writing prior to start of construction. Do not construct curves with radii less than 80 feet. Compound curves are permitted. Traveled way tolerance is (+) 2 feet unless otherwise designated.

(b) Profile grade. Profile grade may be shifted a maximum of 5 feet up or down from the plan elevation provided the new grade tangent does not vary more than 2 percent from the plan grade tangent. Connect revised forward and back grade tangents with a uniform vertical curve consistent with the criteria.

212.06 Drainage. Install culverts and other drainage structures according to Section 602, 571**,** 572 and Section 209.

212.07 Erosion Control. Install erosion control measures and seeding according to the drawings and Sections 157 and 625.

212.08 Acceptance. Linear grading will be evaluated under Subsections 106.02 and 106.04.

Clearing and slash and timber treatment will be evaluated under Sections 201 and 203.

Measurement

212.09 Measure the Section 212 items listed in the bid schedule according to Subsection 109.02 and the following.

Do not measure changes in the clearing and grubbing quantity caused by alignment adjustments under Subsection 212.04.

Payment

212.10 The accepted quantities, measured as provided in Subsection 109.02 and above, will be paid at the contract price per unit of measurement for the Section 212 pay item listed in the bid schedule. Payment will be full compensation for the work prescribed in this Section. See Subsection 109.05.

230 - Roadside Brushing

230.00_0114_us_08_04_2005

Description

230.01 Work. This work consists of removing all vegetative material including limbs, residual slash, live roadside brush, and small trees within the brushing limits designated on the plans.

Construction

230.02 Brushing. Cut all brush and small trees (6 inches diameter, or less, at the point of cut) inside the brushing limits and outside the roadbed no higher than 4 inches above ground level (6 inches for machine brushing). If rocks or other obstructions are encountered, cut no higher than 6 inches above the obstruction. Limb live trees with a diameter larger than 6 inches to provide a clear height of 14 feet above the road surface.

Cut all brush and trees located on the roadbed as nearly flush to the road surface as possible so stumps will not become a hazard to vehicle tires.

230.03 Windfalls. Limb windfalls lying within or across the brushing limits, cut off at the top of the existing cut slope or 5 feet from the shoulder on the fill slope. Dispose of windfall material as slash.

230.04 Road Junctions. Do not deposit brushing debris on the roadway of adjoining roads.

230.05 Slash Treatment. Scatter slash outside the brushing limits without damaging residual trees. Slash is defined as any material that has a length greater than 36 inches or a diameter greater than 2 inches at any point. Do not deposit material in streams, streambeds, culvert inlets or outlets, drainage ways, or cattle guards.

230.06 Acceptance. Roadside brushing will be evaluated under Subsection 106.02.

Measurement

230.07 Method. Measure the Section 230 items listed in the bid schedule according to Subsection 109.02 and the following.

Linear measurements will be horizontal along the road centerline.

Quantities will be the number of miles (or stations) and fractions thereof along the road centerline.

Payment

230.08. The accepted quantities will be paid at the contract price per unit of measurement for the section 230 pay items listed in the bid schedule. Payment will be full compensation for the work prescribed in this section. See Subsection 109.05.

251 - Riprap

251.03_nat_us_08_05_2009

Construction Requirements

251.03 General.

Add the following:

Place riprap under or adjacent to structures before placing prefabricated superstructure units or constructing superstructure falsework unless otherwise approved by the CO.

251.08 Measurement.

Add the following:

Payment for excavation and embankment required for placement of riprap is indirectly included in the pay item for riprap.

262 - Reinforced Soil Embankment

262.00_nat_us_05_14_2004

Description

262.01 This work consists of constructing reinforced soil embankments.

Material

262.02 Conform to the following Subsections:

Geogrid, category 1,2,3,4,5,or 6	714.03
Structural backfill	704.04
Select granular backfill	704.10
Reinforcing mesh	720.01(h)

Construction Requirements

262.03 General. Before beginning work, submit a work plan for acceptance. Allow at least 3 days for acceptance. Include procedures for stretching and staking the geogrid.

Excavate according to Section 209. Grade the foundation for a width equal to the length of reinforcing elements plus 18 inches. Where the embankment is set on a rocky foundation, place 6 inches of select granular backfill under the geogrid or reinforcing mesh. Dispose of unsuitable or excess excavation material according to Subsection 204.14.

The final limits and configuration of the excavation may vary, depending on the foundation materials encountered during excavation.

262.04 Reinforcing Elements. Place soil reinforcing elements at the specified elevation and alignment. Orient the reinforcing elements so that the maximum tensile strength available is in the direction of specified primary reinforcement.

Do not splice reinforcement elements in the primary direction. Overlap geogrids three ribs in the direction transverse to the primary direction, and attach with hog rings or other approved methods. Overlap reinforcing mesh one rib in the direction transverse to the primary direction.

Prevent wrinkle development or slippage of reinforcement elements during fill placement and spreading.

262.05 Backfilling. Install the base of the reinforced embankment within + 4 inches of the plan elevation or as directed by the CO. Backfill the stabilized volume with specified structural backfill or select granular backfill according to Subsection 209.10. Ensure that no voids exist below the geogrids or reinforcing mesh. Compact each layer according to Subsection 209.11, method (b). Do not use sheepsfoot rollers for compaction.

Do not damage or disturb the reinforcing elements. Do not operate equipment on the embankment with less than 6 inches of fill on top of the geogrid or reinforcing mesh. Correct all damaged, misaligned, or distorted reinforcing elements.

Backfill and compact behind the stabilized volume with structural backfill according to Subsection 209.10 and 209.11, method (b). At the end of each day's operation, slope the last lift of backfill away from the embankment face to direct surface runoff away from the face. Do not allow surface runoff from adjacent areas to enter the embankment construction area.

262.06 Embankment Slope Treatment. Treat the face of the reinforced slope for erosion control in according to Section 157.

262.07 Acceptance. Reinforcing elements will be evaluated under Subsections 106.02 and 106.03.

Construction of reinforced soil embankments and services will be evaluated under Subsections 106.02 and 106.04.

Select granular backfill and structural backfill will be evaluated under Subsections 106.02 and 106.04. See Table 262-1 for sampling and testing requirements.

Measurement

262.08 Measure the items listed in the bid schedule according to Subsection 109.02 and the following.

Measure reinforcing elements by the square yard in place.

Measure select granular backfill within the stabilized volume by the cubic yard in place.

Payment

262.09 The accepted quantities, measured as provided in Subsection 109.02 and above, will be paid at the contract price per unit of measurement for the Section 262 pay item listed in the bid schedule. Payment will be full compensation for the work prescribed in this Section. See Subsection 109.05.

303 - Road Reconditioning

303.01_nat_us_03_02_2005

303.01 Work.

Delete and add the following:

This work consists of reconditioning ditches, shoulders, roadbeds, cattleguards, asphalt surfaces, and aggregate surfaces.

303.06_nat_us_08_05_2008

303.06 Aggregate Surface Reconditioning.

Delete and replace with the following:

303.06 Asphalt and Aggregate Surface Reconditioning.

Repair soft and unstable areas to the full depth of the aggregate surface and according to Subsection 204.07. Scarify to the depth of the aggregate surface or to a depth of 6 inches, whichever is less, and remove surface irregularities. Reshape, finish, and compact the entire aggregate surface according to Subsection 301.05, Subsection 321.05, or Subsection 322.05 as applicable.

For asphalt surfaces, clean the existing surface of all loose material, dirt, or other deleterious substances by approved methods. Remove and dispose of unsuitable material that shows evidence of distress, excess asphalt material, or settlement in the roadbed. Patch the areas with approved material that conforms to and is compatible with the adjacent pavement structure. Perform the patch work according to Section 301, 404, 430, or other sections as applicable for the layer or courses being repaired. Clean and seal cracks in the existing asphalt surface according to Subsection 414.05. Correct surface irregularities exceeding 6 inches in depth with a specified aggregate. Place and compact the aggregate according to Subsections 301.04 and 301.05. Prelevel other dips, depressions, sags, excessive or nonexistent crown, or other surface irregularities with asphalt concrete according to Section 404. Spread and compact the asphalt concrete in layers parallel to the grade line not to exceed 2 inches in compacted depth.

Delete Table 303-1 and replace with the following:

303.07_nat_us_03_02_2005

303.07 Roadway

Reconditioning.

Add the following:

Remove cattleguard decks. Clean the deck and the area beneath the cattleguard of soil and other material to the bottom of the original foundation over the entire width of the installation. Reinstall the cattleguard deck.

Table 303-1
Sampling and Testing Requirements

Material or Product	Type of Acceptance (Subsection)	Characteristic	Category	Test Methods Specifications	Sampling Frequency	Point of Sampling	Split Sample	Reporting Time
Existing Roadway	Measured and tested for conformance (106.04)	Moisture-density Method D	—	AASHTO T 99 (1)	1 per each mixture or change in material	Processed material before incorporating in work	Yes, when requested	Before using in work
		Moisture-density Method E	—	R-1 Marshall	"	"	"	"
		Moisture-density Method F	—	AASHTO T 180(1)	"	"	"	"
		Moisture-density Method G	—	R-1 Marshall	"	"	"	"
		In-place density & moisture content	—	AASHTO T 310 or other approved procedures	1 per 3000 yd^2	In-place	—	Before placing next layer

(1) Minimum of 5 points per proctor.

303.10 Measurement

Modify the second paragraph as follows:

Measure ditch reconditioning and shoulder reconditioning by the mile, station, or foot horizontally along the centerline of the roadway for each side of the roadway.

322 - Minor Aggregate Courses

322.00_nat_us_10_14_2011

Description

322.01 This work consists of constructing one or more courses of aggregate on a prepared surface. Work includes producing aggregate by grid rolling, screening, or crushing methods, or placing pit-run or Government-furnished aggregate.

Surface aggregate grading is designated as shown in Table 703-3.

Subbase and base aggregate grading is designated as shown in Table 703-2.

Screened aggregate grading is designated as shown in Table 703-16.

Material

322.02 Conform to the following Subsections:

Aggregate	703.05
Water	725.01

Construction Requirements

322.03 General. Prepare the surface on which the aggregate course is placed according to Section 204 or 303 as applicable.

Request approval of the roadbed in writing before placing aggregate.

Develop, haul, and apply water in accordance to Section 170.

Submit target values within the gradation ranges shown in Table 703-2 or 703-3 for the required grading. After reviewing the proposed target values the CO will determine the final values for the gradation and notify the Contractor in writing.

No quality requirements or gradation other than maximum size will be required for pit run and grid-rolled material. For grid rolling, use all suitable material that can be reduced to maximum size.

After processing on the road, remove all oversize material from the road and dispose of it as directed by the CO.

If the aggregate is produced and stockpiled before placement, handle and stockpiled according to Section 320. Establish stockpile sites at approved locations.

322.04 Mixing and Spreading. Mix the aggregate and adjust the moisture content to obtain a uniform mixture with a moisture content suitable for the specified compaction method. Spread and shape the mixture on the prepared surface in a uniform layer with no segregation of size, and to a loose depth that will provide the required compacted thickness.

Do not place in layers exceeding 6 inches in compacted thickness for aggregate base and surface courses or twice the maximum particle size for screened aggregate. When more than one layer is necessary, compact each layer according to Subsection 322.05 before placing the next layer. Route hauling and leveling equipment uniformly over the full width.

When placing aggregate over geotextile, place aggregate in a single lift to the full depth specified.

322.05 Compacting. Compact each layer full width. Roll from the sides to the center, parallel to the centerline of the road. Along curbs, headers, walls, and all places not accessible to the roller, compact the material with approved tampers or compactors.

Compact the aggregate using one of the following methods as specified:

Compaction A. Operating spreading and hauling equipment over the full width of the travelway.

Compaction B. Operate rollers and compact as specified in Subsection 204.11(a)(1).

Compaction C. Moisten or dry the aggregate to a uniform moisture content between 5 and 7 percent based on total dry weight of the mixture. Operate rollers and compact as specified in Subsection 204.11(a)(1).

Compaction D. Compact to a density of at least 95 percent of the maximum density, as determined by AASHTO T 99, method C or D.

Compaction E. Removed.

Compaction F. Compact to a density of at least 95 per-cent of the maximum density, as determined by AASHTO T 180, method C or D.

Compaction G. Removed.

For all compaction methods, blade the surface of each layer during the compaction operations to remove irregularities and produce a smooth, even surface. When a density requirement is specified, determine the in place density and moisture content according to AASHTO T 310 or other approved test procedures.

322.06 Construction Tolerance. If grade finishing stakes are required, finish the surface to within ±0.10 feet from staked line and grade elevation.

If grade finishing stakes are not required, shape the surface to the required template and check the surface with a 10-foot straightedge. Defective areas are surface deviations in excess of 1/2 inch in 10 feet between any two contacts of the straightedge with the surface.

Correct all defective areas by loosening the material, adding or removing material, reshaping, and compacting.

Ensure that the compacted thickness is not consistently above or below the specified thickness. The maximum variation from the compacted specified thickness is ½ inch.

Ensure that the compacted width is not consistently above the specified width. The maximum variation from the specified width will not exceed +12 inches at any point.

322.07 Maintenance. Maintain the aggregate course to the correct line, grade, and cross-section by blading, watering, rolling, or any combination thereof until placement of the next course. Correct all defects according to Subsection 322.06.

322.08 Acceptance. See Table 322-1 or Table 322-2 as applicable, for sampling and testing requirements.

Aggregate gradation and surface course plasticity index will be evaluated under Subsection 106.04. If the aggregate is obtained from a Government stockpile then the above characteristics will be evaluated under Subsection 106.02. Other aggregate quality properties will be evaluated under Subsections 106.02 and 106.04. Placement of aggregate courses will be evaluated under Subsections 106.02 and 106.04.

The allowable upper and lower aggregate gradation limits are the Target Value plus or minus the allowable deviations shown in Tables 703-2 and 703-3.

The allowable upper and lower Plasticity index limits for surface courses are stated in 703.05(b).

Preparation of the surface on which the aggregate course is placed will be evaluated under Section 204 or 303 as applicable.

Measurement

322.09 Measure the Section 322 items listed in the bid schedule according to Subsection 109.02 and the following as applicable.

Measure square yard width horizontally to include the top of aggregate width including designed widening. Measure the square yard length horizontally along the centerline of the roadway.

If the measurement for aggregate is by cubic yard using contract quantities then measure aggregate by the cubic yard in-place once compacted, otherwise measurement for aggregate by the cubic yard is measured by the cubic yard in the hauling vehicle.

Measure thickness perpendicular to the grade of the travelway.

Measure width perpendicular to the centerline.

Payment

322.10 The accepted quantities will be paid at the contract price per unit of measurement for the Section 322 pay items listed in the bid schedule. Payment will be full compensation for the work prescribed in this Section. See Subsection 109.05.

Table 322-1
Sampling and Testing Requirements

Material or Product	Type of Acceptance (Subsection)	Characteristic	Category	Test Methods Specifications	Sampling Frequency	Point of Sampling	Split Sample	Reporting Time
Aggregate source quality 703.05	Measured and tested for conformance (106.04 & 105)	LA abrasion (coarse)	—	AASHTO T 96	1 per type & source of material	Source of material	Yes, when requested	Before using in work
		Sodium sulfate soundness loss (coarse & fine)	—	AASHTO T 104	"	"	"	"
		Durability index (coarse & fine)	—	AASHTO T 210	"	"	"	"
		Fractured faces	—	ASTM D 5821	"	"	"	"
Subbase, Base, and Surface courses	Measured and tested for conformance (106.04)	Sample	—	AASHTO T 2	2 per day	From windrow or roadbed after processing or from approved crusher sampling device	Yes	48 hours

Table 322-1 (continued)
Sampling and Testing Requirements

Material or Product	Type of Acceptance (Subsection)	Characteristic	Category	Test Methods Specifications	Sampling Frequency	Point of Sampling	Split Sample	Reporting Time
Subbase, Base, and Surface	Measured and tested for conformance (106.04)	Moisture-density Method D	—	AASHTO T 99 (1)	1 per type and source of material	Source of material	Yes, when requested	Before using in work
			—		"	"	"	"
		Moisture-density Method F	—	AASHTO T 180(1)	"	"	"	"
			—		"	"	"	"
		In-place density & moisture content	—	AASHTO T 310 or other approved procedures	3 per day	In-place	—	Before placing next layer

(1) Minimum of 5 points per proctor.

Table 322-2
Sampling and Testing Requirements

Material or Product	Type of Acceptance (Subsection)	Characteristic	Category	Test Methods Specifications	Sampling Frequency	Point of Sampling	Split Sample	Reporting Time
Screened Aggregate	Measured and tested for conformance (106.04)	Sample	—	AASHTO T 2	2 per day	From windrow or roadbed after processing or from approved crusher sampling device	Yes	48 hours

404 - Minor Hot Asphalt Concrete

404.02_nat_us_06_09_2006

404.02 Composition of Mix (Job-Mix Formula).

Delete the second paragraph and replace with the following:

Submit a job-mix formula and supporting documentation, test results, and calculations for the material to be incorporated into the work. Include copies of laboratory test results and mix design data that demonstrate that the properties of the aggregate, additives, and mixture meet the current requirements and criteria of Federal or state agencies. Ensure that the job-mix formula was performed no more than one year prior to placing the hot asphalt concrete. After reviewing the Contractor's proposed job-mix formula, the CO will determine the final values for the job-mix formula to be used and notify the Contractor in writing.

404.03_0618_us_06_09_2007

404.03 Surface Preparation.

Change the following:

"Subsection 410.05" to "Subsection 401.06"

Add the following:

Apply an asphalt prime coat to contact surfaces of aggregate base according to Section 411.

404.04_nat_us_03_02_2005

404.04 Weather Limitations.

Change 35° F to 45° F:

404.06_nat_us_03_02_2005

404.06 Placing.

Add the following:

Do not place asphalt until the CO has approved in writing the area where it will be placed.

Delete the last sentence and replace with the following:

Offset the longitudinal joint of one layer at least 6 inches from the joint in the layer immediately below. Make the longitudinal joint in the top layer along the centerline of two-lane roadways or at the lane lines of roadways with more than two lanes. Offset transverse joints in succeeding layers and in adjacent lanes at least 10 feet, where possible.

404.07 Compacting (a).

Delete and replace with the following:

(a) Roadway paving. Thoroughly and uniformly compact the surface a minimum of three passes with rollers that meet one of the following requirements:

(1) Steel-wheeled rollers, other than vibratory type, capable of exerting a force of not less than 1.5 ton/feet of width of the compression roll or rolls.

(2) Vibratory steel-wheel rollers with a minimum mass of 5 ton, equipped with amplitude and frequency controls, and designed to compact asphalt concrete.

(3) Pneumatic-tire rollers with smooth tread tires of equal size that provide a uniform compacting pressure for the full width of the roller and capable of exerting a ground pressure of at least 80 lbf/in^2.

Perform initial compaction while the mixture is above 250 °F. Perform finish rolling with steel-wheel rollers and continue until no roller tracks remain.

602 - Culverts and Drains

602.03_nat_us_09_06_2005

602.03 General.

Add the following:

Ensure that the final installed alignment of all pipe allows no reverse grades, and does not permit horizontal and vertical alignments to vary from a straight line drawn from center of inlet to center of outlet by more than 2 percent of pipe center length or 1.0 feet, whichever is less.

602.03_nat_us_10_02_2008

602.03 General.

Delete second paragraph and add the following:

The lengths and locations of individual pipe "as shown on the plans" are approximate. Do not order pipe until culvert locations are designated on the ground and a written list of the correct lengths is approved by the CO.

602.03_06_us_03_17_2010

602.03 General

Add the following:

Clean and paint damaged coating caused by welding, field cutting, or handling in accordance with AASHTO M 36M and ASTM A 849.

625 - Turf Establishment

625.05_nat_us_03_30_2005

625.05 Watering.

Delete the entire subsection

625.06_0618_us_09_17_2008

625.06 Fertilizing.

Delete the entire subsection

625.07_0618_us_09_17_2008

625.07 Seeding. (b) Hydraulic method.

Add the following:

Apply seed mixture at the rate of **30** pounds of live seed per acre to the roadway, side slopes, waste areas, stream banks, and any other disturbed sites.

633 - Permanent Traffic Control

633.02_nat_us_03_03_2005

633.02 Material.

Add the following subsections

Protective Overlay Film	718.02
Edge Film	718.02

633.03_nat_us_03_03_2005

633.03 General.

Delete the subsection and add the following:

Furnish traffic control devices and guide signs according to the MUTCD, approved USDA-FS and state supplements, the current edition of USDA-FS EM-7100-15 Sign and Poster Guidelines for the Forest Service, and Standard Highway Signs published by FHWA. Submit the sign list for approval before ordering.

634 - Permanent Pavement Marking

634.03_nat_us_03_03_2005

634.03 General.

Add the following:

On single lane roads apply pavement markings according to the manufacturer's recommendations and in a direction consistent with safe application.

635 - Temporary Traffic Control

635.03_nat_us_05_13_2004

635.03 General.

Add the following:

Install temporary traffic control signs to temporary posts or approved temporary sign mounts.

703 - Aggregate

703.05_nat_us_08_14_2009

Delete 703.05 and replace with the following:

703.05 Subbase, Base, Surface Course, and Screened Aggregate.

(a) Subbase or base aggregate. Furnish hard, durable particles or fragments of crushed stone, crushed slag, or crushed gravel conforming the following:

(1) Gradation	Table 703-2
(2) Liquid limit, AASHTO T 89	25 max.
(3) Plastic limit, AASHTO T 90	Nonplastic
(4) Los Angeles abrasion, AASHTO T 96	40% max.
(5) Sodium sulfate soundness loss (5 cycles), AASHTO T 104	12% max.
(6) Durability index (coarse), AASHTO T 210	35 min.
(7) Durability index (fine), AASHTO T 210	35 min.
(8) Fractured faces, ASTM D 5821	50% min.
(9) Free from organic matter and lumps or balls of clay	

Do not use material that breaks up when alternately frozen and thawed or wetted and dried.

Obtain the aggregate gradation by crushing, screening, and blending processes as necessary. Fine aggregate, material passing the No. 4 sieve, shall consist of natural or crushed sand and fine mineral particles.

(b) Surface course aggregate. Furnish hard, durable particles or fragments of crushed stone, crushed slag, or crushed gravel conforming the following:

(1) Gradation	Table 703-3
(2) Liquid limit, AASHTO T 89	35 max.
(3) Plastic Index, AASHTO T 90	
a) If the percent passing the No. 200 sieve is less than 12%	2 to 9
b) If the percent passing the No. 200 sieve is greater than 12%	Less than 2
(4) Los Angeles abrasion, AASHTO T 96	40% max.
(5) Sodium sulfate soundness loss (5 cycles), AASHTO T 104	12% max.
(6) Durability index (coarse), AASHTO T 210	35 min.
(7) Durability index (fine), AASHTO T 210	35 min.
(8) Fractured faces, ASTM D 5821	75% min.
(9) Free from organic matter and lumps or balls of clay	

Do not use material that breaks up when alternately frozen and thawed or wetted and dried.

Do not furnish material that contains asbestos fibers.

Obtain the aggregate gradation by crushing, screening, and blending processes as necessary. Fine aggregate, material passing the No. 4 sieve, shall consist of natural or crushed sand and fine mineral particles.

(c) Screened aggregate – Furnish hard, durable particles or fragments of stone, slag, or gravel conforming the following:

(1) Gradation	Table 703-16
(2) Plastic Index, AASHTO T 90	Less than 9
(3) Los Angeles abrasion, AASHTO T 96	55% max.
(4) Free from organic matter and lumps or balls of clay.	

Do not use material that breaks up when alternately frozen and thawed or wetted and dried.

Obtain the aggregate gradation by crushing, screening, and blending processes as necessary.

Delete Table 703-2 and replace with the following:

Table 703-2
Target Value Ranges for Subbase and Base Gradation

Sieve Size	Percent by Mass Passing Designated Sieve (AASHTO T 27 and T 11)				
	Grading Designation				
	A (Subbase)	B (Subbase)	C (Base)	D (Base)	E (Base)
2½ inch	100				
2 inch	97 – 100	100	100		
1½ inch		97 – 100			
1 inch	65 – 79 (6)		80 – 100 (6)	100	
3/4 inch			64 – 94 (6)	86 – 100 (6)	100
1/2 inch	45 – 59 (7)				
3/8 inch			40 – 69 (6)	51 – 82 (6)	62 – 90 (6)
No. 4	28 – 42 (6)	40 – 60 (8)	31 – 54 (6)	36 – 64 (6)	36 – 74 (6)
No. 40	9 – 17 (4)			12 – 26 (4)	12 – 26 (4)
No. 200	4.0 – 8.0 (3)	4.0 – 12.0 (4)	4.0 –7.0 (3)	4.0 – 7.0 (3)	4.0 – 7.0 (3)

( ) The value in the parentheses is the allowable deviation (±) from the target values..

Delete Table 703-3 and replace with the following:

Table 703-3
Target Value Ranges for Surface Gradation

Sieve Size	Percent by Mass Passing Designated Sieve (AASHTO T 27 and T 11)					
	Grading Designation					
	F	G	H	S	T	U
1 1/2 inch	100			100		
1 inch	97-100	100		72 – 92 (6)	100	
3/4 inch	76-89 (6)	97 - 100	97 - 100			100
1/2 inch					71 – 91 (6)	
3/8 inch	56-68 (6)	70 – 80 (6)	80 – 92 (6)	51 – 71 (6)		71 – 90 (6)
No. 4	43-53 (7)	51 – 63 (7)	58 – 70 (7)	36 – 53 (7)	43 – 60 (7)	50 – 68 (7)
No. 8				26 – 40 (6)	30 – 46 (6)	34 – 51 (6)
No. 16	23-32 (6)	28 – 39 (6)	28 – 40 (6)			
No. 40	15-23 (5)	19 – 27 (5)	16 – 26 (5)	14 – 25 (5)	16 – 28 (5)	19 – 30 (5)
No. 200	10.0-16.0 (4)	10.0 – 16.0 (4)	9.0 – 14.0 (4)	8.0 – 15.0 (4)	8.0 – 15.0 (4)	8.0 – 15.0 (4)

( ) The value in the parentheses is the allowable deviation (±) from the target values.
If the plasticity index (PI) is greater than 0, the TV range for the No. 200 sieve size is 8-12 (4).

Add Table 703-16:

Table 703-16

Gradation Requirements for Screened Aggregate

Sieve Size	Percent by Mass Passing Designated Sieve (AASHTO T 27 and T 11)						
	Grading Designation						
	L	**M**	**N**	**O**	**P**	**Q**	**R**
6 inch	100	100					
4 inch			100	100			
3 inch					100	100	
2 inch							100
No. 4		15-45		15-45		15-45	

704 - Soil

04.02_0618_us_03_26_2007

704.02 Bedding Material.

Delete the entire subsection and replace with the following:

Furnish material that conforms to subsection 703.05.

704.02_0618_us_04_24_2008

704.02 Bedding Material.

Delete the Soil classification, AASHTO M 145 requirement in (b).

704.03_0618_us_03_26_2007

704.03 Backfill Material.

Delete the Soil classification, AASHTO M 145 requirement in (a) (2) and (b) (2).

714 - Geotextile and Geocomposite Drain Material

714.03_0618_us_03_26_2007

Tables 714-1 and 714-4.

Add the following note to both tables:

(4) Woven slit film will not be allowed.

Add the following:

714.03 Geogrids.

Furnish geogrids consisting of polymeric materials such as polypropylene, polyethylene, or polyester formed into a stable network of bars or straps fixed at their junctions such that the bars retain their relative position to each other.

Elevate and protect rolls with a waterproof cover if stored outdoors.

(a) Physical requirements. Furnish geogrid treated to resist ultraviolet degradation, and conforming to the physical strength requirements shown in table 714-7 according to ASTM D 4595 for the specified geogrid category. Strength values shown in table 714-7 represent minimum average roll values and are for the direction of primary reinforcement. Ensure that the aperture size for all geogrids is between ¾ to 3 inches.

(b) Evaluation procedures. Geogrids will be evaluated under Subsection 106.03. Furnish a certification and a sample of the geogrid.

Table 714-7—Physical strength requirements for geogrids.

Category	Minimum Ultimate Strength at Breakage *(lbs/ft)*
1	890
2	1985
3	2875
4	4110
5	5475
6	8215
7	9866

General Conditions

In addition to all USACE permit conditions, the following 401 WQC conditions apply to all NWP categories certified or partially certified by this 401 WQC, unless specified in the condition. Additional 401 WQC Category Specific Conditions follow, which must also be complied with as applicable.

1) **Turbidity:** All practical Best Management Practices (BMPs) on disturbed banks and within the stream shall be implemented to minimize turbidity during in-water work. OAR 340-041-0036 states that turbidity shall not exceed 10% above natural stream turbidities, except where allowed by the rule. This rule also states that limited duration activities necessary to accommodate essential dredging, construction or other legitimate activities and which cause the turbidity standard to be exceeded may be authorized provided all practical turbidity control techniques have been applied and a section 401 water quality certificate has been granted.

   a. **Monitoring:** Turbidity monitoring shall be conducted and recorded as described below. Monitoring shall occur each day during daylight hours when in-water work is being conducted. A properly and regularly calibrated turbidimeter is recommended, however, visual gauging is acceptable.

      i. Representative Background Point: a sample or observation must be taken every four hours at a relatively undisturbed area approximately 100 feet upcurrent from in-water disturbance to establish background turbidity levels for each monitoring cycle. Background turbidity, location, and time must be recorded prior to monitoring downcurrent.

      ii. Compliance Point: Monitoring shall occur every four hours approximately 100 feet down current from the point of discharge and be compared against the background measurement or observation. The turbidity, location, and time must be recorded for each sample.

   b. **Compliance:** Results from the compliance points should be compared to the background levels taken during each monitoring interval. Exceedances are allowed as follows:

MONITORING WITH A TURBIDIMETER		
ALLOWABLE EXCEEDANCE TURBIDITY LEVEL	ACTION REQUIRED AT 1ST MONITORING INTERVAL	ACTION REQUIRED AT 2ND MONITORING INTERVAL
0 to 5 NTU above background	Continue to monitor every 4 hours	Continue to monitor every 4 hours
5 to 29 NTU above background	Modify BMPs & continue to monitor every 4 hours	Stop work after 8 hours at 5-29 NTU above background
30 to 49 NTU above background	Modify BMPs & continue to monitor every 2 hours	Stop work after 2 hours at 30-49 NTU above background
50 NTU or more above background	Stop work	Stop work
VISUAL MONITORING		
No plume observed	Continue to monitor every 4 hours	Continue to monitor every 4 hours
Plume observed	Modify BMPs & continue to monitor every 4 hours	Stop work after 8 hours with an observed plume

WQ CONDITIONS
ATTACHMENT 3

When monitoring visually, turbidity that is visible over background is considered an exceedance of the standard.

If an exceedance over the background level occurs, the applicant must modify the activity and continue to monitor every four hours or as appropriate (above). If an exceedance over the background level continues after the second monitoring interval, the activity must stop until the turbidity levels return to background. If, however, turbidity levels return to background at second monitoring level due to implementation of BMPs or natural attenuation, work make continue with appropriate monitoring as above.

If an exceedance occurs at: 50 NTU or more over background; 30 NTU over background for 2 hours; or 5-29 NTU over back ground for 8 hours, the activity must stop immediately for the remainder of that 24-hour period.

c. **Reporting:** Copies of daily logs for turbidity monitoring shall be available to DEQ, USACE, NMFS, USFWS, and ODFW upon request. The log must include: background NTUs, compliance point NTUs, comparison of the points in NTUs, and location, time, and tidal stage (if applicable) for each reading. Additionally, a narrative must be prepared discussing all exceedances with subsequent monitoring, actions taken, and the effectiveness of the actions.

d. **BMPs to Minimize In-stream Turbidity:**
   i. Sequence/Phasing of work – The applicant will schedule work activities so as to minimize in-water disturbance and duration of in-water disturbances;
   ii. Bucket control - All in-stream digging passes by excavation machinery and placement of fill in-stream using a bucket shall be completed so as to minimize turbidity. All practicable techniques such as employing an experienced equipment operator, not dumping partial or full buckets of material back into the wetted stream, adjusting the volume, speed, or both of the load, or by using a closed-lipped environmental bucket shall be implemented;
   iii. Limit the number and location of stream crossing events. Establish temporary crossing sites as necessary at the least impacting areas and supplement with clean gravel or other temporary methods as appropriate;
   iv. Machinery will not drive into the flowing channel;
   v. Excavated material will be placed so that it is isolated from the water edge or wetlands and not placed where it could re-enter waters of the state uncontrolled; and,
   vi. Use of containment measures such as silt curtains, geotextile fabric, and silt fence will be implemented and properly maintained in order to minimize in-stream sediment suspension and resulting turbidity.

2) **Erosion Control:** The applicant is referred to DEQ's *Oregon Sediment and Erosion Control Manual*, April 2005. The following erosion control measures (and others as appropriate) or comparable measures as specified in an NPDES 1200-C permit (if required) shall be implemented during construction/project activities:

a. Filter bags, sediment traps or catch basins, vegetative strips, berms, Jersey barriers, fiber blankets, bonded fiber matrices, geotextiles, mulches, wattles, sediment fences, or other measures used in combination shall be used to prevent movement of soil from uplands into waterways or wetlands;
b. An adequate supply of materials needed to control erosion must be maintained at the project construction site;
c. To prevent stockpile erosion, use compost berms, impervious materials or other equally effective methods, during rain events or when the stockpile site is not moved or reshaped for more than 48 hours;
d. Erosion control measures shall be inspected and maintained daily, or more frequently as necessary, to ensure their continued effectiveness and shall remain in place until all exposed soil is stabilized;
    i. If monitoring or inspection shows that the erosion and sediment controls are ineffective, mobilize work crews immediately to make repairs, install replacements, or install additional controls as necessary.
    ii. Remove sediment from erosion and sediment controls once it has reached 1/3 of the exposed height of the control.
e. Unless part of the authorized permanent fill, all construction access points through, and staging areas in, riparian or wetland areas shall use removable pads, mats, or other methods as necessary to prevent soil compaction, unless doing so would be more impactful to these or surrounding resources.
f. Flag or fence off avoided wetlands and newly planted areas to protect from disturbance and/or erosion.
g. Dredged or other excavated material shall be placed on upland areas with stable slopes to prevent materials from eroding back into waterways or wetlands;
h. Sediment from disturbed areas or in any way able to be tracked by vehicles onto pavement shall not be allowed to leave the site in amounts that would reasonably be expected to enter waters of the state and impair water quality. Placement of clean aggregate at all construction entrances, and other BMPs such as truck or wheel washes if needed, will be used when earthmoving equipment will be leaving the site and traveling on paved surfaces; and,
i. Projects which disturb one acre or more require an NPDES 1200C Storm Water Discharge Permit. Contact the appropriate DEQ regional office for more information (Contact information can be found at: http://www.deq.state.or.us/wq/).

3) **Post-Construction Stormwater Management for NWP activities involving impervious surfaces (NWPs 3, 14, 15, 29, 36, 39, 42)**

Stormwater discharges to waters of the state must not violate state water quality standards, including Oregon Administrative Rule (OAR) 340-041-0004, the Antidegradation Policy for Surface Water. There is a reasonable expectation that runoff from impervious surfaces will carry pollutants toward the lowest point in the landscape, which is generally a water of the state. Low Impact Development (LID) techniques to reduce amounts and concentrations of runoff leaving the project area and Best Management Practices (BMPs) targeting removal of reasonably expected pollutants (sediment, metals, hydrocarbons, nutrients, pesticides, etc.) prior to discharge of stormwater must be incorporated into project designs. A narrative and site sketch describing these LID techniques, BMPs and other stormwater

treatment options commensurate with the scale of the project will constitute a post-construction stormwater management plan which must be submitted by the applicant to DEQ for review and approval prior to construction. DEQ's *Stormwater Management Plan Submission Guidelines for Removal/Fill Permit Applications Which Involve Impervious Surfaces* (located under "Removal/Fill" at: http://www.deq.state.or.us/wq/sec401cert/sec401cert.htm) provides information to determine the level of detail required for the plan based on project type, scope, location, and other factors, as well as references to assist in designing the plan. Submission of the plan must include:

a. A site sketch or plan view drawing indicating: the drainage flow directions; discharge locations; contours and spot elevations; location and size of impervious features (e.g., parking lots, driveways, buildings, or roads); nearest downgradient waterbody with direction of stream and surface flow, other physical features of the site, and the location and type of post-construction BMPs;
b. A narrative description of proposed BMPs and a summary of their anticipated operation to insure adequate capacity, proper function, and appropriate design for the site such that quality, quantity, and seasonality of pre-construction hydrologic conditions are mimicked to the maximum extent practicable, based on stormwater anticipated to be generated due to project-related impervious surfaces and delivered to waters of the state. See local jurisdiction regulations and accepted stormwater manuals for detention and capacity requirements;
c. Implementation of the plan must be concurrent with installation of impervious surfaces and include an adequate operation and maintenance plan with documentation of responsibility for maintenance by a qualified entity;
d. If engineered structural BMPs are incorporated into the post construction stormwater management plan they must be prepared and stamped by an Oregon registered Professional Engineer (PE), and specification drawings must be submitted; or
e. In lieu of a complete plan, the applicant may submit:
    i. Documentation of acceptance of the stormwater into a DEQ permitted National Pollutant Discharge Elimination Strategy (NPDES) Phase I or II Municipal Separate Storm Sewer System (MS4); or
    ii. Reference to implementation of a programmatic process developed to achieve these expectations, and acknowledged by DEQ as adequately addressing pollution control or reduction through basin-wide post-construction storrmwater management practices.

4) **Deleterious Materials:** The following conditions relating to control of hazardous, toxic and waste materials shall be observed:

a. **Treated Wood: Ineligibility-** Projects which propose installation of chemically treated wood that will contact surface or ground water or that will be placed over water where it will be exposed to abrasion require individual, site specific review and are, therefore, **not certified by this 401 WQC**.
b. Projects that require removal of chemically treated wood must:
    i. Ensure that no treated wood debris falls into waters of the State. If treated wood debris falls into waters of the State, it must be removed immediately and disposed of properly.

ii. Dispose of all treated wood debris removed during a project, including treated wood pilings, at an upland facility approved for hazardous materials of this classification. Do not leave treated wood pile(s) in the water or stacked on the streambank.
iii. Immediately place removed piling onto an appropriate dry storage site.
iv. Attempt to remove the entire temporary or permanent piling.
v. If complete removal is not possible, ensure that any treated wood piling to remain submerged is broken, cut, or pushed at least 3 feet below the sediment surface.
vi. Fill and cover holes left by each treated timber piling removed with clean, native substrates that match surrounding streambed materials. If chemically treated wood piles are removed using a vibratory hammer, ensure that holes are capped with clean fill as the pile is removed. Surrounding the pile with clean material prior to removal will allow the hole to fill in upon extraction in order to contain any undecomposed chemicals which have pooled beneath the substrate and may tend to escape upon extraction of the pile as they are less dense than the surrounding water. Clean fill must be accounted for in project description and threshold limits.

c. Biologically harmful materials and construction debris including, but not limited to: petroleum products, chemicals, cement cured less than 24 hours, welding slag and grindings, concrete saw cutting by-products, sandblasted materials, chipped paint, tires, wire, steel posts, asphalt and waste concrete shall not be placed in waterways or wetlands. Authorized fill material must be free of these materials. The applicant must remove all foreign materials, refuse, and waste from the project area.
d. An adequate supply of materials needed to contain deleterious materials during a weather event must be maintained at the project site and deployed as necessary.
e. Machinery refueling shall not occur in waterways, wetlands, or riparian areas.

5) **Spill Prevention:** Fuel, operate, maintain, and store vehicles and construction materials in areas that minimize disturbance to habitat and prevent adverse effects from potential fuel spills.

a. Complete vehicle staging, cleaning, maintenance, refueling, and fuel storage in a vehicle staging area placed 150 feet or more from any waters of the state. An exception to this distance can be made if all practicable prevention and containment measures [as in 5) b through e below, or others] are employed and this distance is not possible because of any of the following site conditions:
    i. Physical constraints that make this distance not feasible (e.g., steep slopes, rock outcroppings);
    ii. Natural resource features would be degraded as a result of this setback, or,
    iii. Either no contaminants are present or full containment of potential contaminants to prevent soil and water contamination is provided;
b. Inspect all vehicles operated within 150 feet of any waters of the State daily for fluid leaks before leaving the vehicle staging area. Repair any leaks detected in the vehicle staging area before the vehicle resumes operation;
c. Before operations begin and as often as necessary during operation, steam

clean (or an approved equal) all equipment that will be used below bankfull elevation until all visible external oil, grease, mud, and other visible contaminates are removed;

d. Diaper all stationary power equipment (e.g., generators, cranes, stationary drilling equipment) operated within 150 feet of any waters of the state to prevent leaks, unless other suitable containment is provided to prevent potential spills from entering any waters of the state; and,

e. An adequate supply of materials (such as straw matting/bales, geotextiles, booms, diapers, and other absorbent materials) needed contain spills must be maintained at the project construction site and deployed as necessary.

6) **Spill & Incident Reporting:**

a. In the event that petroleum products, chemicals, or any other deleterious materials are discharged into state waters, or onto land with a potential to enter state waters, the discharge shall be promptly reported to the Oregon Emergency Response Service (OERS, 1-800-452-0311). Containment and cleanup must begin immediately and be completed as soon as possible.

b. If the project operations causes a water quality problem which results in distressed or dying fish, the operator shall immediately: cease operations; take appropriate corrective measures to prevent further environmental damage; collect fish specimens and water samples; and notify DEQ, ODFW, NMFS and USFWS as appropriate.

7) **Vegetation Protection and Restoration:** Riparian, wetland, and shoreline vegetation in the authorized project area shall be protected from unnecessary disturbance to the maximum extent practicable through:

a. Minimization of project and impact footprint;
b. Designation of staging areas and access points in open, upland areas;
c. Fencing or other barriers demarking construction areas; or
d. Use of alternative equipment (e.g., spider hoe or crane)

If authorized work results in unavoidable vegetative disturbance; riparian, wetland, and shoreline vegetation shall be successfully reestablished to function for water quality benefit at pre-project levels or improved, at the completion of the authorized work.

8) **Project Thresholds:**

a. Project applications must be complete and account for total impacts at build-out regardless of construction phasing. Projects may not be phased to avoid exceeding USACE or DEQ imposed threshold limitations of wetland impact or cubic yards of material removal or fill; and,

b. Impacts to wetlands and waters of the state for a project are additive relative to the thresholds for eligibility.

9) DEQ is to have site access upon reasonable request.

10) This WQC is invalid if the project is operated in a manner not consistent with the project description contained in the permit application materials.

11) A copy of this WQC letter shall be kept on the job site and readily available for reference by the USACE, DEQ personnel, the contractor, and other appropriate state and local government inspectors.

12) DEQ reserves the option to modify, amend or revoke this WQC, as necessary, in the event new information indicates that the project activities are having a significant adverse impact on State water quality or critical fish resources.

Activity Specific Conditions

In addition to all conditions of the USACE permit and the 401 WQC General Conditions above, the following conditions apply to specific categories of authorized activities.

~~**NWP 12 – Utility Lines:** This WQC does not authorize the construction of substations or~~ permanent access roads for utility lines in waters of the state including wetlands.

1. All stream permanent or temporary crossings must be made perpendicular to the bankline, or nearly so, and at the narrowest, or least sensitive, portion of the wetland or riparian corridor.
2. Directionally bored stream crossings:
   a. Drilling Discharge- All drilling equipment, drill recovery and recycling pits, and any waste or spoil produced, will be completely isolated, recovered, then recycled or disposed of to prevent entry into waters of the state. Recycling using a tank instead of drill recovery/recycling pits, is preferable;
   b. In the event that drilling fluids unavoidably enter a water of the state, the equipment operator must stop work, immediately initiate containment measures and report the spill to the Oregon Emergency Response System (OERS) at 800.452.0311. Prior to cleanup, plans must be submitted and approved by the regulatory agencies;
   c. When drilling is completed, attempts will be made to remove the remaining drilling fluid from the sleeve (e.g., by pumping) to reduce turbidity when the sleeve is removed; and,
   d. An adequate supply of materials needed to control erosion and/or to contain drilling fluids must be maintained at the project construction site and deployed as necessary.
3. Utility lines through wetlands must be fitted with trench plugs to avoid dewatering wetlands.

~~**NWP 13 –** **Bank Stabilization:**~~

1. **Ineligibility:** The following streambank stabilization activities require individual 401 WQC or additional conditions approved by DEQ.
   a. Bank stabilization projects in excess of 500 feet.
   b. Permanent placement of material in wetlands adjacent to a stabilization project.
   c. Placement of new vertical structures such as retaining walls, bulkheads, gabions or similar structures; or placement of rock in constructed stream channel trenches where bioengineering is not a feature of the project, with the following exceptions:

i. Rock as ballast to anchor or stabilize large woody debris components of an approved bank treatment.
ii. Rock to fill scour holes, as necessary to protect the integrity of the stabilization project, if the rock is limited to the depth of the scour hole and does not extend above the channel bed.
iii. Rock to construct a footing, facing, head wall, or other protection necessary to prevent scouring or downcutting of, or slope erosion or failure at, an existing structure (e.g., culvert, utility line, roadway or bridge support) to be repaired.
iv. Rock or vertical structures in projects maintaining existing transportation related structures when a registered professional engineer identifies these as the only effective method due to site specific geotechnical or hydraulic concerns.

For projects meeting eligibility or an exception as listed above (in 1. i. through iv.), the applicant shall:

2. Identify potential adverse impacts of bank stabilization on water quality parameters and beneficial uses both upstream and downstream of the activity site, and show how these have been avoided, minimized or mitigated.
3. Provide site design and construction features that avoid, then minimize, then mitigate for the adverse impacts of bank stabilization. Appropriate design features include use of biodegradable project materials, riparian vegetation, and woody debris.
4. When rock is necessary, it must be appropriately sized for stability, clean, durable, angular, and include interstitial plantings unless the permittee can demonstrate that such plantings are not practicable.
5. Provide mitigation approved by DEQ for lost or reduced water quality function.

~~**NWP 16 – Return Water from Contained Upland Disposal Areas:** Return water from material known to contain contaminants in dissolved form at levels which exceed chronic water quality criteria (OAR 340-041-0033, Tables 20, 33A, and 33B, see: http://www.deq.state.or.us/regulations/rules.htm) are **not certified under this 401 WQC**.~~

~~1. For all materials removed from wetlands and waterways during authorized activities which has been determined to be suitable for in-water disposal, all practicable efforts to return to waters or beneficially reuse all excess material shall be undertaken prior to disposing in upland areas.~~
~~2. Upland disposal of materials must conform to existing DEQ solid waste and contaminant requirements which include an appropriately located and designed confined disposal facility and implementation of all practicable measures to prevent material discharge and uncontrolled return water discharge to waterways and wetlands.~~
~~3. Upland disposal facilities must receive a DEQ Solid Waste Letter of Authorization or written notice of exemption prior to disposal taking place there. Contact DEQ Land Quality in the regional office covering project area (800-452-4011).~~

NWP 33 – Temporary Construction, Access, and Dewatering: Refer to Appendix D of DEQ's *Oregon Sediment and Erosion Control Manual*, April 2005, for proper dewatering and work area isolation techniques. Minimize general disturbance to existing vegetation and water quality by:

1. Using low impact equipment (e.g., spider hoe, crane);

2. Using existing roadways, travel paths, and drilling pads;
3. Clearing vegetation which must be removed only to ground level (no grubbing);
4. Placing clean gravel over geotextile fabric for access ways;
5. Minimizing the number of temporary stream crossings and locating them in the least impactful areas;
6. Constructing temporary crossings of riparian areas and streams at right angles to the main channel;
7. Obliterating all temporary access roads that will not be incorporated into the permanent structure and restoring those areas;
8. Stabilizing any exposed soil; and,
9. Revegetating the site.

NWP 38 – Cleanup of Hazardous and Toxic Waste:

1. Dewatering of toxic material dredged from in-stream shall not occur over un-isolated waters of the state. Containment of toxics laden return water must be provided such that proper disposal or adequate treatment prior to controlled release back to waters of the state may be accomplished.
2. Upland disposal facilities must receive a DEQ Solid Waste Letter of Authorization or written notice of exemption prior to disposal taking place there. Contact DEQ Land Quality in the regional office covering project area (800-452-4011).

NWP 41 - Reshaping Existing Drainage Ditches: The linear threshold for reshaping drainage ditches under any NWP is 500 feet. **All projects exceeding the 500 feet threshold require individual 401 WQC or additional conditions approved by DEQ.** For projects within the 500 feet threshold, the applicant shall:

1. Work from only one bank in order to minimize disturbance to existing vegetation, preferably the bank with the least existing vegetation;
2. Preserve the existing vegetation to the maximum extent practicable;
3. Establish in-stream and riparian vegetation on reshaped channels and side channels wherever practicable. Such plantings shall be targeted to address water quality parameters (e.g., provide shade to water to reduce temperature or provide bank stability through root systems to limit sediment inputs). Planting options include clustering or vegetating only one side of a channel, preferably the side which provides maximum shade.