U.S. DEPARTMENT OF AGRICULTURE
FOREST SERVICE REGION 8
SUMTER NATIONAL FOREST
LONG CANE DISTRICT

LC BLUE BRANCH FT

FSR 516 – Blue Branch – 0.89 Miles – Reconstruction
FSR 521 - Mulberry - 0.55 Miles – Reconstruction
FSR 521C – 0.71 Miles – Reconstruction
FSR 522 - Bethia – 1.36 Miles – Reconstruction
FSR 523 - Link – 1.29 Miles – Reconstruction
FSR 523B – 0.36 Miles – Reconstruction
L 216-2 – 0.25 Miles – Reconstruction
L 216-2A - 0.14 Miles – Reconstruction

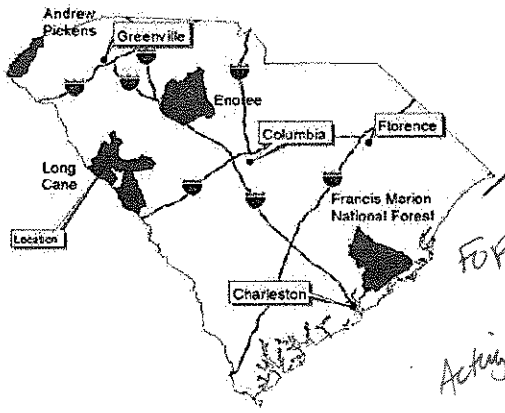

04/20/2016
Forest Engineer Date

5/2/2016
District Ranger Date

5/3/16
FOR Engineering and Recreation Staff Officer Date

05/03/2016
Acting Forest Supervisor Date

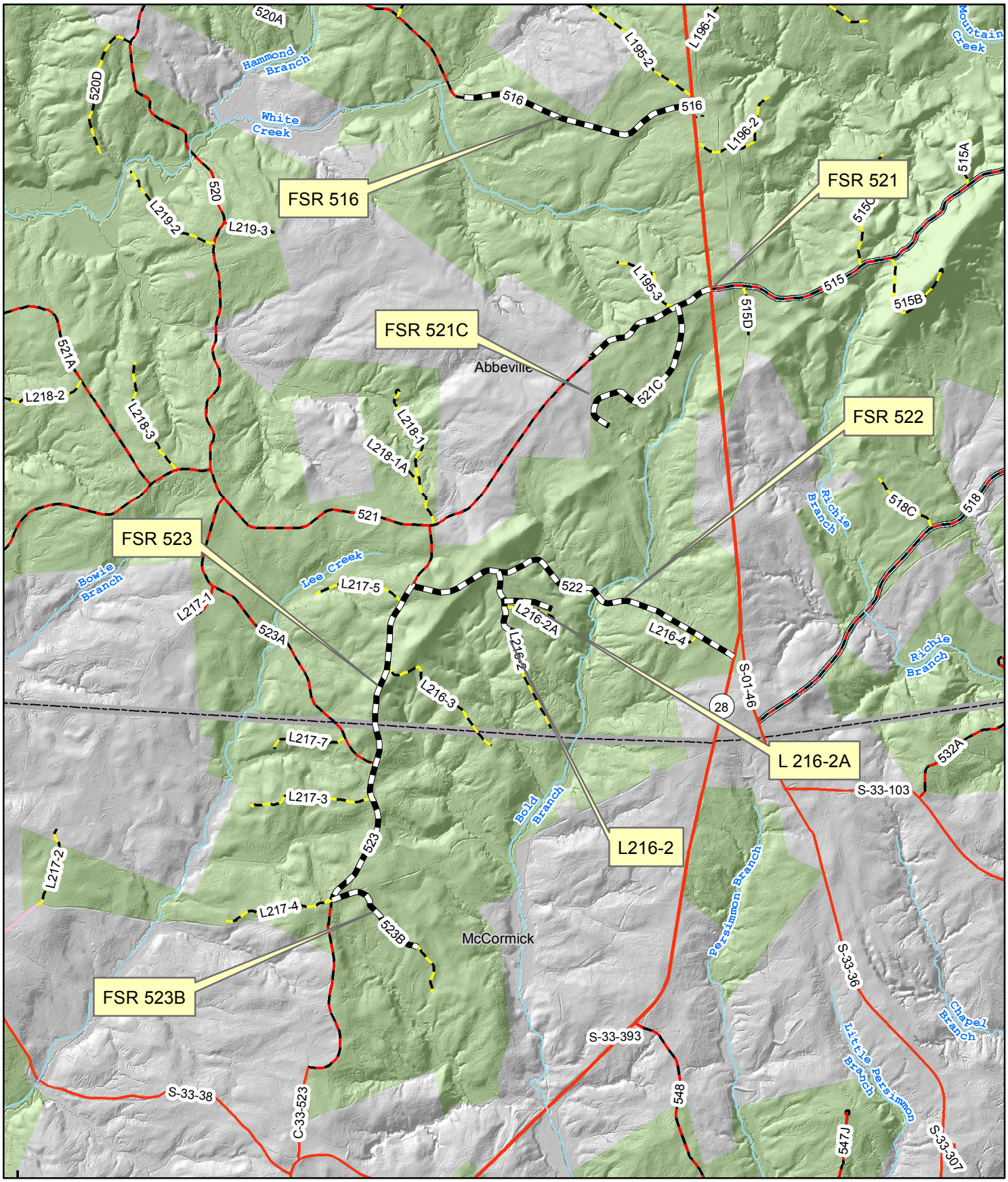

Legend

Project

LONG CANE DISTRICT
BLUE BRANCH FT

0 0.5 1 1.5 2 Miles

NOT TO SCALE

ESTIMATE OF QUANTITIES

ITEM NO.	DESCRIPTION	METHOD OF MEASURE	UNIT	REVISION DATE	QUANTITIES						REMARKS
				ROAD NUMBER	516	521	521C	522	523	523B	
				MILE POST (MILES)	0.89	0.55	0.71	1.36	1.29	0.36	
FMS201	Road Heavy Brushing	CQ	Miles	2006	0.89		0.71	1.36		0.36	
24901	Composite Road Construction	CQ	Miles	2006							
24902	Composite Turnaround Construction	CQ	LS	2006	1.00						
30109	Aggregate Surface Course, grading CR14 compaction method A	CQ	Ton	2006	200.00	400.00		800.00	100.00		
30109	Aggregate Surface Course, grading 3" compaction method A	CQ	Ton	2006	50.00		400.00			300.00	
30326	Road reconditioning	CQ	Miles	2006	0.90	0.55		1.36			
60708	Cleaning Culvert in place	CQ	EA	2006		1.00		1.00			
61902	Farm Gate	CQ	LS	2006						1.00	
62501	Seeding and Mulching Dry Method	CQ	Acres	2006	0.10						
63308	Removing and Reseting Culvert Post Marker	CQ	EA	2006		1.00		13.00			
63312	Culvert Post Marker	CQ	EA	2006	4.00	3.00		15.00			

ESTIMATE OF QUANTITIES

ITEM NO.	DESCRIPTION	METHOD OF MEASURE	UNIT	REVISION DATE	QUANTITIES						REMARKS
				ROAD NUMBER	L216-2	L216-2A					
				MILE POST (MILES)	0.25	0.14	-	-	-	-	
FMS201	Road Heavy Brushing	CQ	Miles	2006							
24901	Composite Road Construction	CQ	Miles	2006	0.25	0.14					
24902	Composite Turnaround Construction	CQ	LS	2006							
30109	Aggregate Surface Course, grading CR14 compaction method A	CQ	Ton	2006							
30109	Aggregate Surface Course, grading 3" compaction method A	CQ	Ton	2006	300.00	200.00					
30326	Road reconditioning	CQ	Miles	2006							
60708	Cleaning Culvert in place	CQ	EA	2006							
61902	Farm Gate	CQ	LS	2006	1.00						
62501	Seeding and Mulching Dry Method	CQ	Acres	2006	0.60	0.30					
63308	Removing and Reseting Culvert Post Marker	CQ	EA	2006							
63312	Culvert Post Marker	CQ	EA	2006							

U.S. DEPARTMENT OF AGRICULTURE
FOREST SERVICE REGION 8
SUMTER NATIONAL FOREST
LONG CANE DISTRICT
LC BLUE BRANCH FT

FSR 516
Blue Branch

MILE POST	DESCRIPTION
0.0	INTERSECTION WITH SC 28
0.00 – 886	SPOT SURFACE, PLACE 200 TONS OF AGGREGATE, GRADE CR14 4” LOOSE, WHERE DIRECTED BY THE ENGINEER.
	HEAVY BRUSHING REQUIRED
	ROAD RECONDITION SHALL BE GRADED FROM DITCH LINE TO DITCH LINE
0.074	EXISTING CULVERT INSTALL 2 CULVERT MARKERS
0.386	EXISTING CULVERT INSTALL 2 CULVERT MARKERS
0.886	BUILD A DIRT MOUND, TO BLOCK ACCESS CONSTRUCT 100’ X 100’ TURN AROUND,
	PLACE 50 TONS OF AGGREGATE, GRADE 3” 4” LOOSE, WHERE DIRECTED BY THE ENGINEER.
	SEED AND MULCH ALL DISTURBED AREAS
	END OF PROJECT

FSR 521
Mulberry

MILE POST	DESCRIPTION
0.0	INTERSECTION WITH SC 28
0.00 – 0.550	SPOT SURFACE, PLACE 400 TONS OF AGGREGATE, GRADE CR14 4” LOOSE, WHERE DIRECTED BY THE ENGINEER.
	ROAD RECONDITION SHALL BE GRADED FROM DITCH LINE TO DITCH LINE
0.12	EXISTING CULVERT INSTALL 2 CULVERT MARKERS
0.135	INTERSECTION WITH FSR 321C LEFT.
0.386	EXISTING CULVERT INSTALL 1 CULVERT MARKER RESET I CULVERT MARKER
	CLEAN INLET AND OUTLET CULVERT
0.550	END OF PROJECT.

FSR 521C

MILE POST	DESCRIPTION
0.0	INTERSECTION WITH FSR 521
0.00 – 0.71	SPOT SURFACE, PLACE 400 TONS OF AGGREGATE, GRADE 3” 4” LOOSE, WHERE DIRECTED BY THE ENGINEER.
	HEAVY BRUSHING REQUIRED
0.17	EXISTING FARM GATE
0.71	END OF PROJECT, TURN AROUND

FSR 522
Bethia

MILE POST	DESCRIPTION
0.0	INTERSECTION WITH SC 28
0.00 – 1.360	SPOT SURFACE, PLACE 800 TONS OF AGGREGATE, GRADE CR14 4” LOOSE, WHERE DIRECTED BY THE ENGINEER. HEAVY BRUSHING ROAD RECONDITION ROAD SHALL BE GRADED FROM DITCH LINE TO DITCH LINE
0.051	EXISTING CULVERT INSTALL 1 CULVERT MARKER RESET 1 CULVERT MARKER
0.122	EXISTING CULVERT INSTALL 1 CULVERT MARKER RESET 1 CULVERT MARKER
0.235	EXISTING CULVERT INSTALL 1 CULVERT MARKER RESET 1 CULVERT MARKER
0.356	EXISTING CULVERT RESET 2 CULVERT MARKERS
0.424	EXISTING CULVERT INSTALL 1 CULVERT MARKER RESET 1 CULVERT MARKER
0.502	EXISTING CULVERT RESET 2 CULVERT MARKERS
0.568	EXISTING CULVERT CLEAN INLET
0.623	EXISTING CULVERT INSTALL 1 CULVERT MARKER RESET 1 CULVERT MARKER
0.715	EXISTING CULVERT INSTALL 1 CULVERT MARKER RESET 1 CULVERT MARKER
0.894	EXISTING CULVERT INSTALL 2 CULVERT MARKERS

0.938	EXISTING CULVERT INSTALL 2 CULVERT MARKERS
0.993	EXISTING CULVERT RESET 2 CULVERT MARKERS
1.010	INTERSECTION L216-2 LEFT
1.058	EXISTING CULVERT INSTALL 1 CULVERT MARKER RESET 1 CULVERT MARKER
1.176	EXISTING CULVERT INSTALL 2 CULVERT MARKERS
1.241	EXISTING CULVERT INSTALL 2 CULVERT MARKERS
1.360	END OF PROJECT INTERSECTION WITH FSR 523

FSR 523
Link

MILE POST	DESCRIPTION
0.0	INTERSECTION WITH FSR 522
0.00 – 1.285	SPOT SURFACE, PLACE 100 TONS OF AGGREGATE, GRADE CR14 4” LOOSE, WHERE DIRECTED BY THE ENGINEER
0.706	INTERSECTION WITH FSR 523A RIGHT
1.285	END OF PROJECT, INTERSECTION WITH FSR 523B LEFT

FSR 523B

MILE POST	DESCRIPTION
0.0	INTERSECTION WITH FSR 523
0.00 – 0.360	SPOT SURFACE, PLACE 300 TONS OF AGGREGATE, GRADE 3” 4” LOOSE, WHERE DIRECTED BY THE ENGINEER
	HEAVY BRUSHING REQUIRED
0.17	REMOVE EXISTING GATE INSTALL NEW FARM GATE
0.360	END OF PROJECT

L216-2

MP	DESCRIPTION
0+00	INTERSECTION WITH FSR 522
0+00 – 1+00	CONSTRUCT INTERSECTION A = 90DEG R = 30 DEG r (LEFT) L = 100’ W = 14’
0+00 – 13+00	SPOT SURFACE, 300 PLACE TONS OF AGGREGATE, GRADE 3” 4” LOOSE, WHERE DIRECTED BY THE ENGINEER.
	CONSTRUCT OUT SLOPE ROAD
	SEED AND MULCH ALL DISTURBED AREAS
1+00	INSTALL FARM GATE
2+00	CONSTRUCT DIP RIGHT
3+50	CONSTRUCT DIP RIGHT
5+00	INTERSECTION WITH L216-2A LEFT
5+50	CONSTRUCT DIP RIGHT
6+90	CONSTRUCT DIP RIGHT
7+90	CONSTRUCT NATURAL DIP RIGHT
9+75	CONSTRUCT DIP RIGHT
11+25	CONSTRUCT NATURAL DIP RIGHT
11+50	BEGIN TRANSITION TURN AROUND
12+00	OBTAIN FULL 100’ WIDE TURN AROUND
13+00	END OF PROJECT AND TURNAROUND

L216-2A

MP	**DESCRIPTION**
0+00	INTERSECTION WITH L216A (5+00)
0+00 – 7+15	SPOT SURFACE, 200 PLACE TONS OF AGGREGATE, GRADE 3” 4” LOOSE, WHERE DIRECTED BY THE ENGINEER.
	CONSTRUCT OUT SLOPE ROAD
	SEED AND MULCH ALL DISTURBED AREAS
3+10	CONSTRUCT NATURAL DIP RIGHT
4+50	CONSTRUCT DIP RIGHT
6+00	CREST
5+85	BEGIN TRANSITION TURN AROUND
6+15	OBTAIN FULL 100’ WIDE TURN AROUND
7+15	END OF PROJECT AND TURNAROUND

GENERAL NOTES:

1. SLASH DISPOSAL SHOULD BE SCATTERED
2. CONSTRUCT 12’ SINGLE LANE ROAD
3. USE 249 SPEC
4. MOTOR GRADE FINISH REQUIRED
5. SEE GATE DRAWING DETAILS FOR A ACCESSIBILITY REQUIREMENTS,(ALL GATE SIGNS SHALL BE INCIDENTAL TO PAY ITEM 619)

CROWN SECTION

N.T.S.

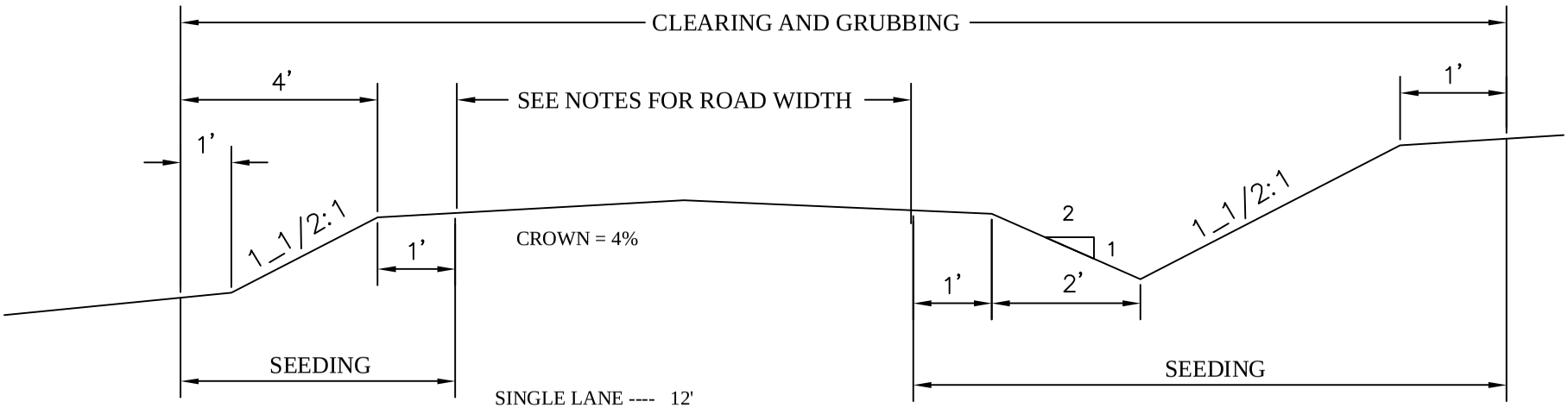

SINGLE LANE ---- 12'
DOUBLE TRACK ----- 20'
CURVE WIDENING ---- AS SHOWN ON THE DRAWING

NOTE: MOTOR GRADER FINISH IS REQUIRED.

SURFACING SHALL BE TRUCK SPREAD TO A THICKNESS "AS SHOWN ON THE DRAWING" THE CONTRACTOR SHALL PREPARE THE SUB GRADE, SHAPE AND FINAL GRADE THE SURFACING TO THE CONFORM TO THE TYPICAL SECTION. THE CONTRACTOR SHALL LIMIT CHANNELING TO THE TYPICAL SECTION. THE CONTRACTOR SHALL LIMIT CHANNELING TO THE AMOUNT OF SURFACING THAT CAN BE DONE IN THAT DAY. SURFACE SHALL BE PLACED IN A SINGLE LAYER THICKNESS UNLESS APPROVED BY THE ENGINEER. AT THE END OF THE EACH WORKING DAY THE CONTRACTOR SHALL SPREAD AND SHAPE ALL SURFACING HAULED THAT DAY. THERE WILL BE NO EXCEPTIONS UNLESS APPROVED IN WRITING BY THE ENGINEER.

SURFACING SECTION

NOT TO SCALE

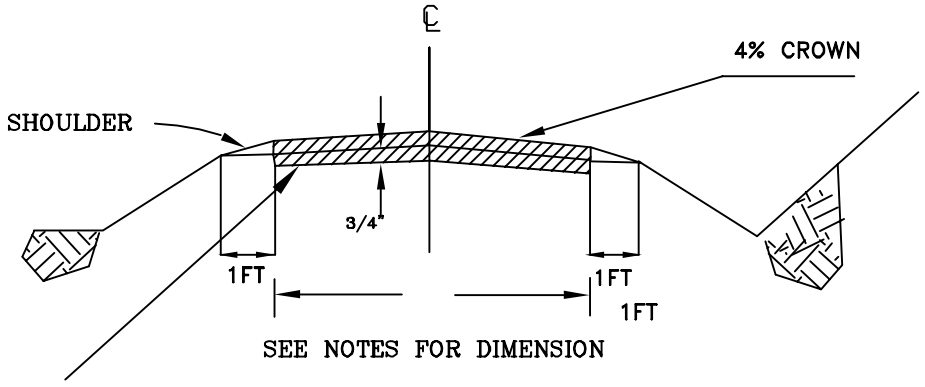

MOTOR GRADER FINISH REQUIRED.

OUTSLOPE TYPICAL

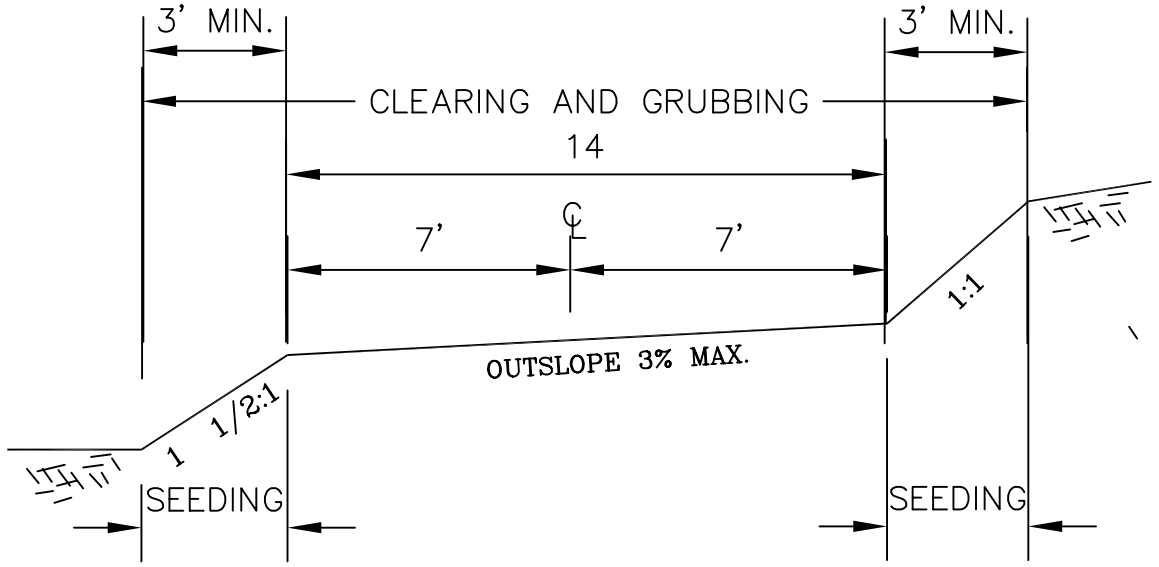

SURFACING SECTION

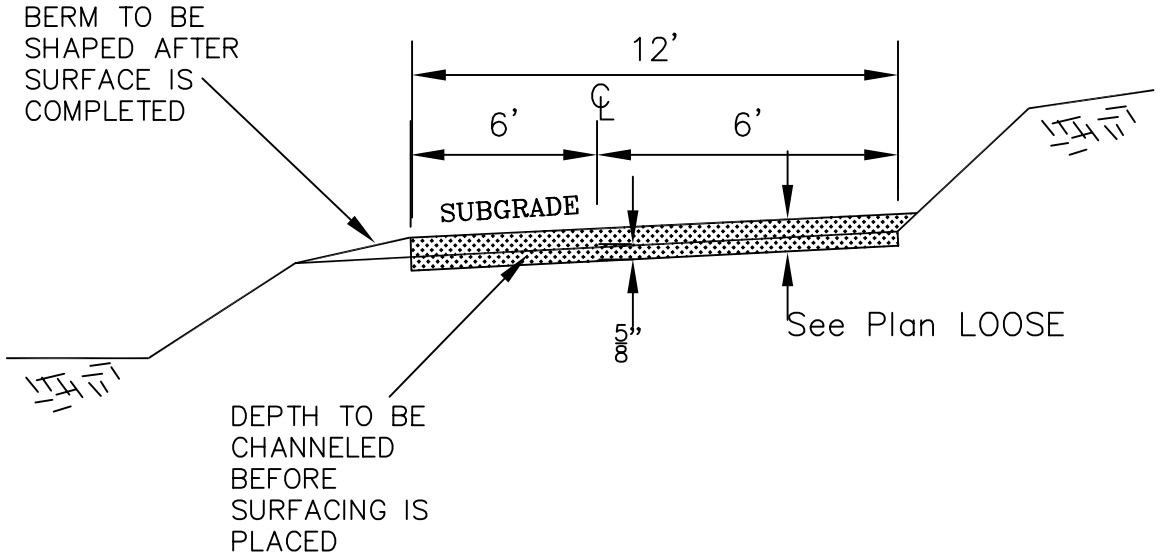

SURFACING SHALL BE TRUCK SPREAD TO A THICKNESS OF See Notes LOOSE DEPTH THE CONTRACTOR SHALL PREPARE THE SUB GRADE, SHAPE AND FINAL GRADE THE SURFACING TO THE CONFORM TO THE TYPICAL SECTION. THE CONTRACTOR SHALL LIMIT CHANNELING TO THE TYPICAL SECTION. THE CONTRACTOR SHALL LIMIT CHANNELING TO THE AMOUNT OF SURFACING THAT CAN BE DONE IN THAT DAY. SURFACE SHALL BE PLACED IN A SINGLE LAYER THICKNESS UNLESS APPROVED BY THE ENGINEER. AT THE END OF THE EACH WORKING DAY THE CONTRACTOR SHALL SPREAD AND SHAPE ALL SURFACING HAULED THAT DAY. THERE WILL BE NO EXCEPTIONS UNLESS APPROVED IN WRITING BY THE ENGINEER.

SURFACING GRADATION:

SUMTER -- GRADING No. 3"

SIEVE DESIG.	% BY WEIGHT PASSING
3"	100
1 1/2"	90 – 100
1"	20 – 55
3/4	0 – 15
3/8	0 – 5

DIP TYPICAL

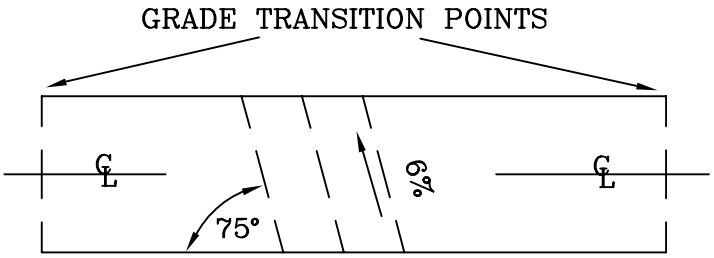

DIP
PLAN VIEW

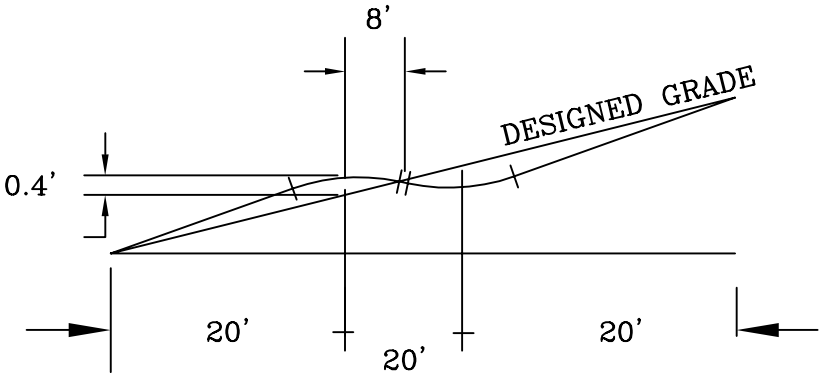

DIP
PROFILE VIEW

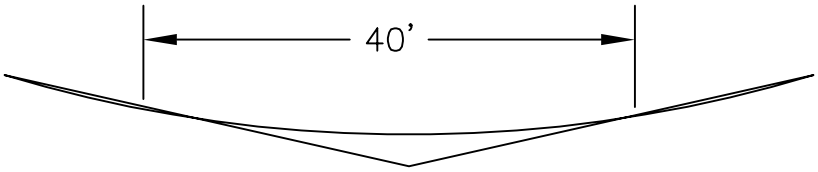

NATURAL DIP
PROFILE VIEW

OF

LEAD-OFF DITCH

NOT TO SCALE

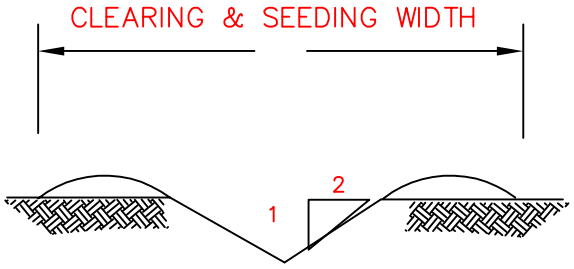

TYPICAL SECTION

NOT TO SCALE

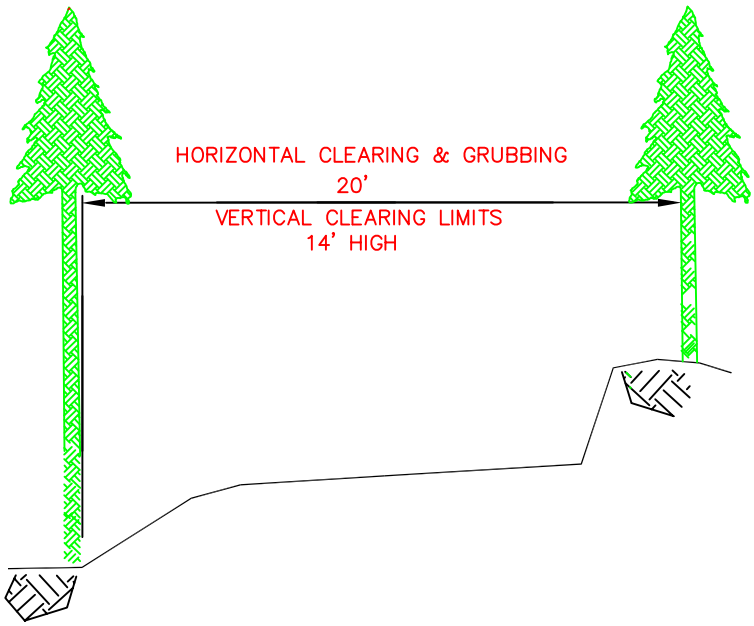

CULVERT SECTION

NOT TO SCALE

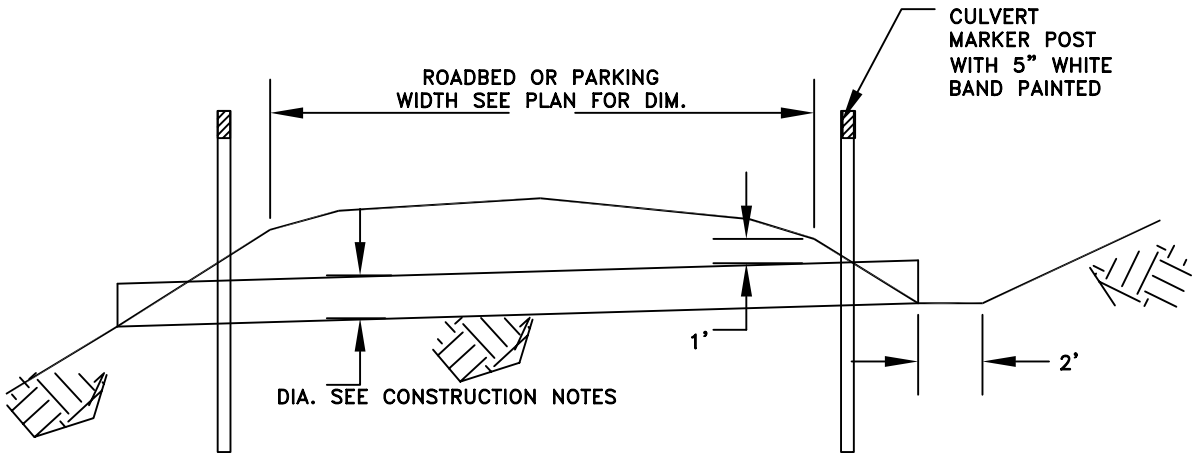

GENERAL NOTES:

1. POST MARKER SHALL BE 3" MIN TREATED WOOD POST WITH A 5" WHITE BAND PAINTED ARROUND TOP.
2. POST MARKER SHALL BE LOCATED ON EACH SIDE OF ROAD VISIBLE TO ON COMING TRAFFIC.

ENTRANCE TYPICAL SECTION

NOT TO SCALE

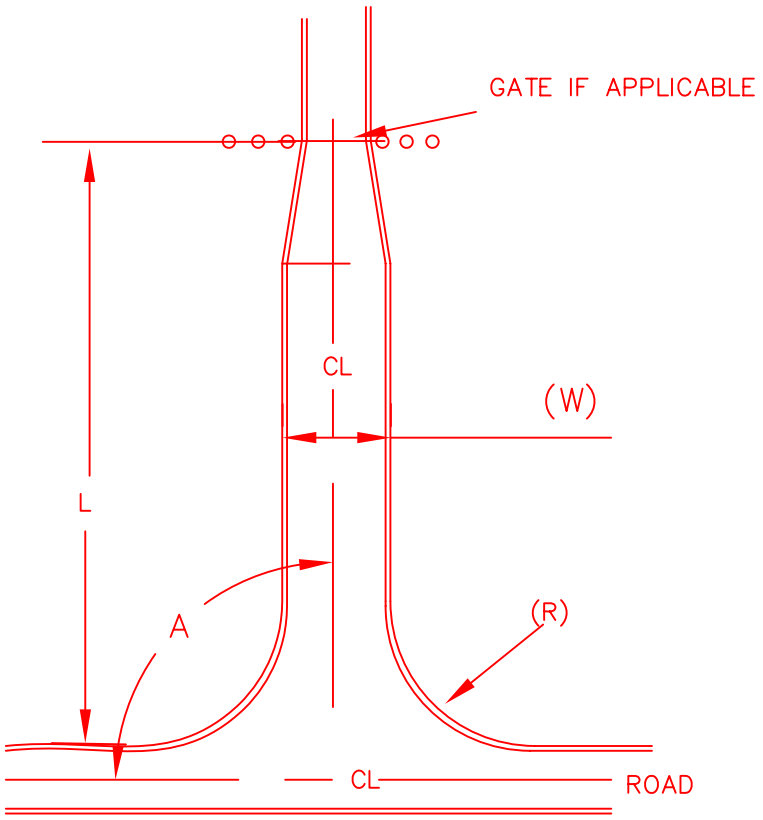

Macadam Base Course	
Sieve Designation	**Percentage by Weight Passing**
2-inch	100
1½-inch	95 – 100
1-inch	70 – 100
½-inch	48 – 75
No. 4	30 – 60
No. 30	11 – 30
No. 200*	0 – 12
Liquid Limit	25 Max.
Plasticity Index	6 Max.

*AASHTO T 11 is used to determine the amount passing the No. 200 sieve.

FARM GATE DETAIL

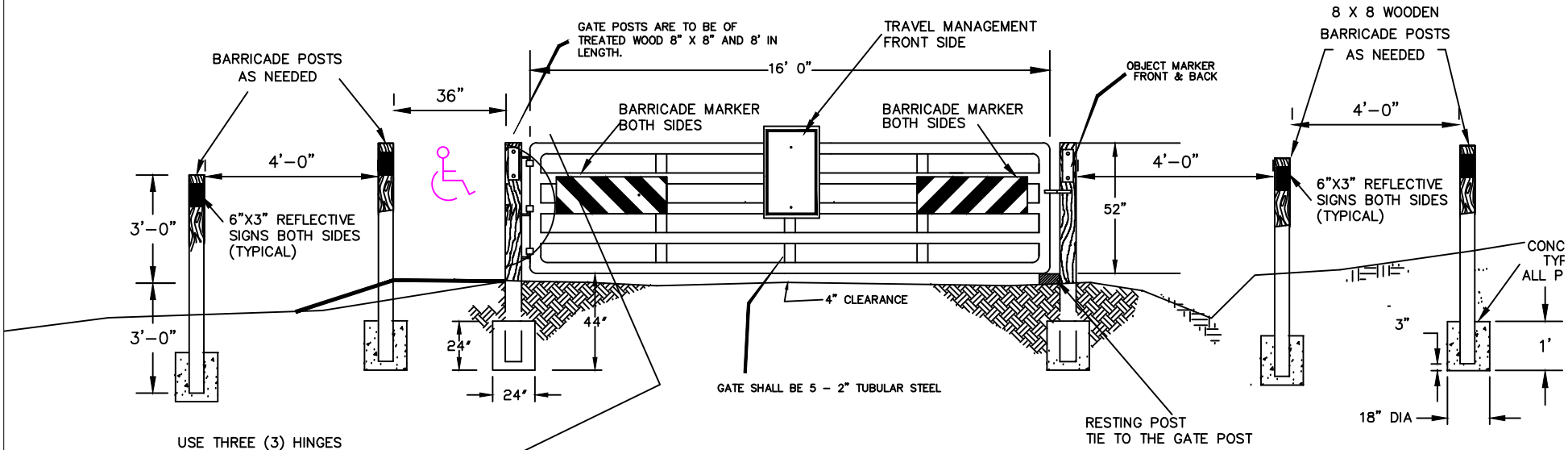

USE THREE (3) HINGES

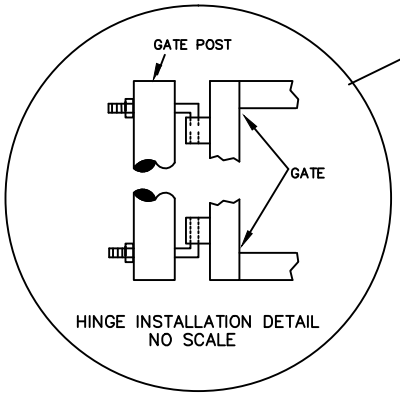

HINGE INSTALLATION DETAIL
NO SCALE

NOTES:

1. WOODEN POSTS SHALL BE TREATED WITH 0.40 OF ACQ – OR CHROMATE COPPER ARSENATE (CCA), MINIMUM RETENTION 0.40 POUNDS PER CUBIC FOOT
2. GATE SHALL BE 16 GAUGE STEEL FARM TYPE, 2" TUBULAR 52" HIGH X 16' WIDE. ALL FARM GATES SHALL HAVE STANDARD RED COLOR FOR PAINT.
3. CONTRACTOR SHALL FURNISH AND INSTALL 3 GATE HINGES AND PROVIDE LOCKING CHAIN TO COR, 1/4" X 6' LONG, GALVANIZED AT EACH FARM GATE INSTALLATION.
4. ALL SIGNS, OBJECT MARKERS, AND HARDWARE SHALL BE FURNISHED AND INSTALL BY THE CONTRACTOR. FOREST SERVICE WILL APPLY STICKERS TO TRAVEL MANAGEMENT SIGN.
5. SIGN SUPPLIER INFORMATION:

   UNICOR; PHONE 1-805-735-6211, FAX 1-805-735-4507

   BARRICADE MARKERS FOR GATES
   ALUMINUM, UNICOR PT#ALSP0025
   RED/WHITE, RIGHT, DIAMOND GRADE, 8X24

   BARRICADE MARKERS FOR GATES
   ALUMINUM, UNICOR PT#ALSP0025
   RED/WHITE, LEFT, DIAMOND GRADE, 8X24

   TRAVEL MANAGEMENT P7115
   ALUMINUM, UNICOR PT#ALSP0075
   12X18, HI-INTENSITY

   OBJECT MARKER,
   ALUMINUM, UNICOR PT#ALDC0025,
   YELLOW 3"X6", HI-INTENSITY

ACCESSIBILITY NOTES:

1. ACCESSIBLE ACCESS CAN BE PROVIDED ON EITHER SIDE OF THE GATE, WHERE GROUND CONDITION AND SHAPE FIT BETTER.
2. DO NOT BLOCK ROAD DITCH, RELOCATION MAY BE NEEDED
3. ACCESS SHALL BE 36" WIDE AT ROAD HEIGHT, BYPASSING SHALL MATCH ROAD SURFACE WITHOUT ANY OBSTACLES.
4. HINGE BOLTS SHALL BE FREE OF ANY SHARP EDGES, ON THE ACCESSIBILITY ACCESS SIDE.

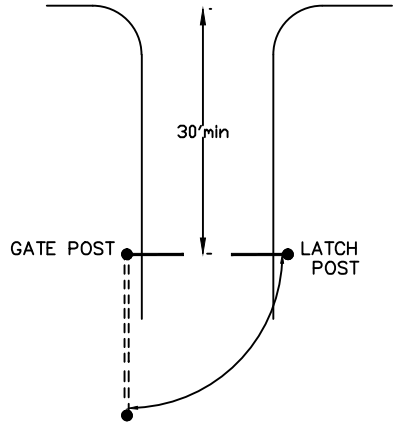

GATE PLAN

NOT TO SCALE

Native Seeding

1. MATERIALS AND APPLICATION RATES
   A. Fertilizer rate shall not exceed 400 lbs per acre 10-10-10
   B. Lime to 1000 lbs per acre (May be less, desired soil pH is between 5.5 and 6)
   C. To prepare, apply fertilizer and lime, rake to form a crumbly seed bed, apply seed with a drill seeder, hydroseeder, or broadcast spreader, then roll or cultipac to firm the seed bed and lightly cover seed with soil (1/4 inch to ½ inch soil optimal). Apply PAM-12 at a rate of 400 lbs/acre to increase soil/seed contact and to stabilize soil. Lightly mulch.
   D. The following weed-free seed mixtures shall be used:

   E. **From Sept.1 to April 1 is the optimal window for seeding native species:**
      1). *Nurse Crops*
         Wheat/Oats/Grain Rye 80 lb/acre
         Crimson Clover 10 lb /acre

      2). Native Perennial Grasses – Seed source SC, NC, or GA <u>Preferred;</u> KY (Sumter only), Fl (FM only)
         Big Bluestem 2 lb/acre
         Indiangrass 3 lb/acre
         Little Bluestem 5 lb/acre

      3). Native Forbs/Legumes – Seed source SC, NC, or GA <u>Preferred</u>, KY (Sumter only), Fl (FM only)
         Blackeyed Susan 1.0 lb/acre
         False Sunflower 1.0 lb/acre
         Lance Leaved Tickseed (Coreopsis) 1.0 lb /acre
         Partridge Pea 1.0 lb/acre
         Roundheaded Lespedeza 0.5 lb/acre
         Spiked Blazing Star 0.5 lb /acre

      If seeding from April 2 to August 31:
      1). Nurse Crop
         Brown Top Millet 30 lb/acre

      2). and 3). Native Perennial Grasses/Forbs/Legumes – Same as above

   F. Apply **weed-free** hay, straw, or wood cellulose fiber mulch immediately after seeding at a rate of 1000 lbs/acre.

2. SOURCES OF NATIVE ECOTYPE SEED
   Roundstone Native Seed 1-888-531-2352 or 1-270-531-3032, roundstoneseed.com
   Ernst Conservation Seeds 1-800-873-3321 or 1-814-336-2404, ernstseed.com
   National Wild Turkey Federation, Conservation Seed Program, outdoordealhound.com/c-179-warm-season-grasses-forbs, Southeast Coastal Plains or Southeast Upland Mix, respectively, 1-800-THE-NWTF
   Mellow Marsh Farm 1-919-742-1200, mellowmashfarm.com

SPECIFICATION AND SPECIAL PROJECT SPECIFICATION LIST											
Sale Name		LC Blue Branch									
Road Number		516	521	521C	522	523	523B	L216-2	L216-2A		
Road Name		lue Branc	Mullberry		Bethia	Link					
Termi Miles (From)		0	0	0	0	0	0	0	0		
Termi Miles (To)		0.886	0.55	0.71	1.36	1.285	0.36	0.25	0.14		
C or R		R	R	R	R	R	R	R	R		
Traffic Service Level		I	I	I	I	I	I	J	J		
Maintenance Level		3	3	1	3	3	1	1	1		
Standard Specification For Construction of Roads and Bridges on Federal Highway Project											
FP-03											
Quarry Location		Greenwood Quary									
Standard Spec or	Latest Revision	Specifications that are referenced by other "X" denotes applicable standard specs. or special									
Standard Spec	2003										
101 - 150	"------"	Apply	To	All	Contracts						
FMS201		X		X	X		X				
249		X						X	X		
301		X	X	X	X	X	X	X	X		
303		X	X		X						
607			X		X						
619							X	X			
625		X						X	X		
633		X	X		X						

FM&S SPECIAL PROJECT SPECIFICATION LIST										
Sale Name		LC Blue Branch								
Road Number		516	521	521C	522	523	523B	L216-2	L216-2A	0
Road Name		ue Bran	Mullberr	0	Bethia	Link	0	0	0	0
Termi Miles (From)		0	0	0	0	0	0	0	0	0
Termi Miles (To)		0.886	0.55	0.71	1.36	1.285	0.36	0.25	0.14	0
C or R		R	R	R	R	R	R	R	R	0
FM&S Specific	Latest Revision	Specifications that are referenced by other "X" denotes applicable standard specs. or special								
FMS201		X		X	X		X			

*** SEE SPS TABLE OF CONTENTS FOR SUPPLEMENTAL SPECIFICATION

FM&S 201.1

PART 1 – SECTION C - DESCRIPTION/SPECIFICATIONS/WORK STATEMENT

C.01 – DESCRIPTION – Heavy Brushing or Mowing

A. SCOPE OF CONTRACT- Contractor shall furnish all labor, equipment, materials, tools, transportation, supplies (including safety), supervision, and perform all work necessary for heavy brushing, and or mowing in accordance with these specifications and drawings. The work consists of mechanical and hand heavy brushing on road right-of-ways as designated in the plan and figure 102-1.

C.02 - GENERAL SPECIFICATIONS

A. ROAD STRUCTURE DEFINITIONS – Graphic definitions of road structural terms are shown in THE DRAWINGS.

C. PUBLIC SAFETY AND TRAFFIC CONTROL – The Contractor shall exercise caution and care while pursuing the work to prevent unnecessary conflict with, or potential hazard to road users.

The Contractor shall post warning signs with flags on each end of the section of road being worked. Signs shall be of the size, quantity and colors as required in the current edition of the “Manual of Uniform Traffic Control Devices”, (MUTCD). A copy of MUTCD is located in each District Rangers office and may be available to the Contractor for in-office reference on request. These signs shall be moved as needed to properly delineate and identify the section of road being maintained. At no time shall these signs be more than 2 miles from operating equipment and shall be in place only when equipment or personnel are actually performing operations. All slow-moving equipment shall have a reflectorized “slow moving” vehicle emblem properly attached.

All work shall be scheduled so that at the end of the workday, the road is passable for the type of traffic normally using the road. If, for any reason, traffic hazards are left adjacent to the road after normal work period, they shall be properly signed as hazards and visibly illuminated at night. Segments of unfinished work, which may present a hazard to road users, shall not be left in the roadway overnight, during weekends or holidays.

C.03 - TECHNICAL SPECIFICATIONS

A. HEAVY BRUSHING - Heavy brushing shall consist of machine and hand cutting of all brush and trees from road shoulder for a distance of 12 feet or to the original clearing limits (see 102-1) on both sides of the road. Either method shall include brushing of all plant growth around signs, culverts, and bridges within designated cutting areas. Brush and trees shall be cut to within 3 inches of ground level, mower height or mower height above standing water in ditches. Trees within clearing limits that exceed 5 inches in diameter at breast height are merchantable and shall be treated as such by the contractor if salvageable. Trees over 10 inches in diameter at breast height can be left on back slope of ditch if they do not present a sight or safety problem. Trees leaning into the roadway shall be cut at the base with disposal handled according to size. All merchantable trees within the clearing limits shall be removed according to the provisions of the timber sale contract. Overhanging branches or limbs shall be trimmed to give a clear height of 14 feet in traveled way and clearing limits. Work includes any additional brushing needed beyond 12 feet for safe sight distance at road intersections and blind curves, as determined by the Engineer. Contractor can dispose of all cut material by other means than removing cut material out of the clearing limits.

MOWING – Mowing shall consist of cutting grass and woody plat growth three inches diameter or less, four inches above ground as specified to the existing clearing limits. Maximum mowing height shall be four inches above ground or standing water. Routine operations shall consist of mowing all growth out from centerline to a point at least eight feet beyond shoulder on each side of the road with heavy duty rotary mower.
Roads with ditches will require mowing the front slope and at least one four foot strip on the back slope of the ditch opposite the traveled way, to a maximum width of fourteen feet from shoulder. All mowing heavy equipment shall operate only within the travel way. Any additional mowing for safe sight distance at road intersections or blind curves is considered a part of this activity. This activity also includes brushing around road signs, culverts, culvert markers, barrier post, gates bridges, and other appurtenances. Brushing shall be to a point one foot beyond appurtenance and then tapered back to the normal mowing width. Contractor shall perform plumbing (vertical alignment) of all culvert marker post.

All heavy brush and trees shall be cut to fall away from the roadway as much as possible. Debris cut or thrown by machinery into road ditches shall be removed to outside of ditch and placed in such a way as not to fall or wash back into ditch.

All rock larger than 3 inches in diameter that are thrown onto the riding surface through the Contractor's operations shall be removed. All woody material larger than 1 inch in diameter or 2 feet in length and any other debris, which could cause tire damage, shall be removed from the riding surface.

B. EQUIPMENT SPECIFICATIONS

1. General - All Equipment proposed to be used for performance of the work shall be of the size, type, in satisfactory operating condition and capable of producing at the manufacturer's rated horsepower. Contractor shall furnish all fuel, oil, grease, repairs, and pay any other expenses incidental to operation of the equipment.

To reduce the chance of invasive plants being spread into the National Forest, any mechanical equipment shall be pressure washed prior to beginning work on the National Forest. It applies to any mechanical equipment that could harbor clumps of vegetative material; such as bush hogs. This pertains particularly to any equipment coming in from Florida, Louisiana, Mississippi, south Georgia, or Alabama.

Any movement or transportation of equipment to or from the work areas required to pursue the work, to repair or replace the equipment, or for Contractor's convenience, shall be at the Contractor's expense.

Any equipment removed from the forest shall require cleaning as stated above before being moved back onto the forest.

2. Tractor and Rotary Mower – Equipment furnished may be heavy-duty farm tractor or motor grader equipment with an operable articulated or telescopic boom mower. The vehicle shall have a minimum of 60 PTO horsepower and a minimum weight of 5000 pounds capable of cutting to clearing limits while being within the traveled way. The mower shall be a rotary type that has a minimum reach of 12 feet, and can efficiently cut grass, brush, and trees with diameters up to 3 inches.

3. Inspection of Equipment – The Contractor's proposed equipment shall be made available to the Contracting Officer for inspection prior to award of the contract. If, at any time, during the course of the contract any equipment is deemed unsatisfactory, the Contracting Officer may order removal of the unsatisfactory equipment and may require that satisfactory replacement equipment be provided at Contractor's expense.

All equipment shall be inspected on site by the COR or inspector prior to starting work to verify equipment has been properly cleaned to meet specifications.

4. Replacement Equipment – If a unit of equipment breaks down or otherwise becomes inoperative, and is not restored to operating condition within three (3) days, the Contractor will be notified in writing to correct the deficiencies or furnish replacement equipment meeting specifications within four (4) calendar day.

C.04 - INSPECTION AND ACCEPTANCE

Inspection of the work performed under this contract shall be made by the ER or the designated Inspector as the work progresses. Inspections shall be conducted at intervals necessary to ensure compliance with the contract specifications and provisions.

C.05 - MEASUREMENT AND PAYMENT

A. BASIS OF PAYMENT - The accepted quantities will be paid at the unit price shown in the Schedule of items.

Pay Item	Description	Pay Unit
201(10)	Road Heavy Brushing	MILES
201(11)	Road Heavy Brushing	LS
201(12)	Road Mowing	MILES
201(13)	Road Mowing	LS

LC Blue Branch FT

FS SUPPLEMENTS SPECIFICATION FP03

Table of Contents

Table of Contents 1
Preface 3
101 - Terms, Format, and Definitions 3
101.01 Meaning of Terms 3
101.01 Meaning of Terms 3
101.03 Abbreviations. 3
101.04 Definitions 4
101.04 Definitions 7
102 - Bid, Award, and Execution of Contract 8
102 Bid, Award, and Execution of Contract 8
103 - Scope of Work 8
Deletions 8
104 - Control of Work 8
Deletions 8
104.06 Use of Roads by Contractor 8
105 - Control of Material 9
105.02 Material Sources. 9
105.02(a) Government-provided sources 9
105.05 Use of Material Found in the Work. 9
106 - Acceptance of Work 9
106.07 Delete 9
107 - Legal Relations and Responsibility to the Public 10
107.05 Responsibility for Damage Claims. 10
107.06 Contractor’s Responsibility for Work. 10
107.08 Sanitation, Health, and Safety 10

107.09 Legal Relationship of the Parties. 10
107.10 Environmental Protection. 10
108 - Prosecution and Progress 11
108 Delete. 11
109 - Measurement and Payment 12
109 Deletions 12
109.02 Measurement Terms and Definitions. 12
151 - Mobilization 13
155 - Schedules for Construction Contracts 13
155 Delete. 13
249 - Composite Road Construction 13
301 - Untreated Aggregate Courses 17
301 Title Change. 17
301.05 Compacting 17
602 - Culverts and Drains 18
602.03 General. 18
625 - Turf Establishment 18
625.05 Watering. 18
625.07 Seeding. (a) Dry method. 19
625.07 Seeding. (b) Hydraulic method. 19
Table 625-1. Fertilizer Application Rate. 19
633 - Permanent Traffic Control 19
633.03 General. 19
718 - Traffic Signing and Marking Material 19
718.05 Aluminum Panels 20

Preface

Preface_wo_03_15_2004_m

Delete all but the first paragraph and add the following:

The Forest Service, US Department of Agriculture has adopted FP-03 for construction of National Forest System Roads.

101 - Terms, Format, and Definitions

101.00_nat_us_07_25_2005

101.01_nat_us_01_22_2009

101.01 Meaning of Terms

Delete all references to the TAR (Transportation Acquisition Regulations) in the specifications.

101.01_nat_us_01_22_2009

101.01 Meaning of Terms

Delete all references to the FAR (Federal Acquisition Regulations) in the specifications.

101.03_nat_us_06_16_2006

101.03 Abbreviations.

Add the following to (a) Acronyms:

AFPA	American Forest and Paper Association
MSHA	Mine Safety and Health Administration
NIST	National Institute of Standards and Technology
NESC	National Electrical Safety Code
WCLIB	West Coast Lumber Inspection Bureau

.

Add the following to (b) SI symbols:

mp	Milepost
ppm	Part Per Million

101.04_nat_us_03_29_2007

101.04 Definitions.

Delete the following definitions and substitute the following:

Bid Schedule--The Schedule of Items.

Bridge--No definition.

Contractor--The individual or legal entity contracting with the Government for performance of prescribed work. In a timber sale contract, the contractor is the "purchaser".

Culvert--No definition.

Right-of-Way--A general term denoting (1) the privilege to pass over land in some particular line (including easement, lease, permit, or license to occupy, use, or traverse public or private lands), or (2) Real property necessary for the project, including roadway, buffer areas, access, and drainage areas.

Add the following:

Adjustment in Contract Price--"Equitable adjustment," as used in the Federal Acquisition Regulations, or "construction cost adjustment," as used in the Timber Sale Contract, as applicable.

Change--"Change" means "change order" as used in the Federal Acquisition Regulations, or "design change" as used in the Timber Sale Contract.

Design Quantity--"Design quantity" is a Forest Service method of measurement from the FS-96 *Forest Service Specifications for the Construction of Roads and Bridges.* Under these FP specifications this term is replaced by the term "Contract Quantities".

Forest Service--The United States of America, acting through the Forest Service, U.S. Department of Agriculture.

Neat Line--A line defining the proposed or specified limits of an excavation or structure.

Pioneer Road--Temporary construction access built along the route of the project.

Purchaser--The individual, partnership, joint venture, or corporation contracting with the Government under the terms of a Timber Sale Contract and acting independently or through agents, employees, or subcontractors.

Protected Streamcourse--A drainage shown on the plans or timber sale area map that requires designated mitigation measures.

Road Order--An order affecting and controlling traffic on roads under Forest Service jurisdiction. Road Orders are issued by a designated Forest Officer under the authorities of 36 CFR, part 260.

Schedule of Items--A schedule in the contract that contains a listing and description of construction items, quantities, units of measure, unit price, and amount.

Utilization Standards--The minimum size and percent soundness of trees described in the specifications to determine merchantable timber.

Add Figure 101-1—Illustration of road structure terms:

Figure 101-1—Illustration of road structure terms.

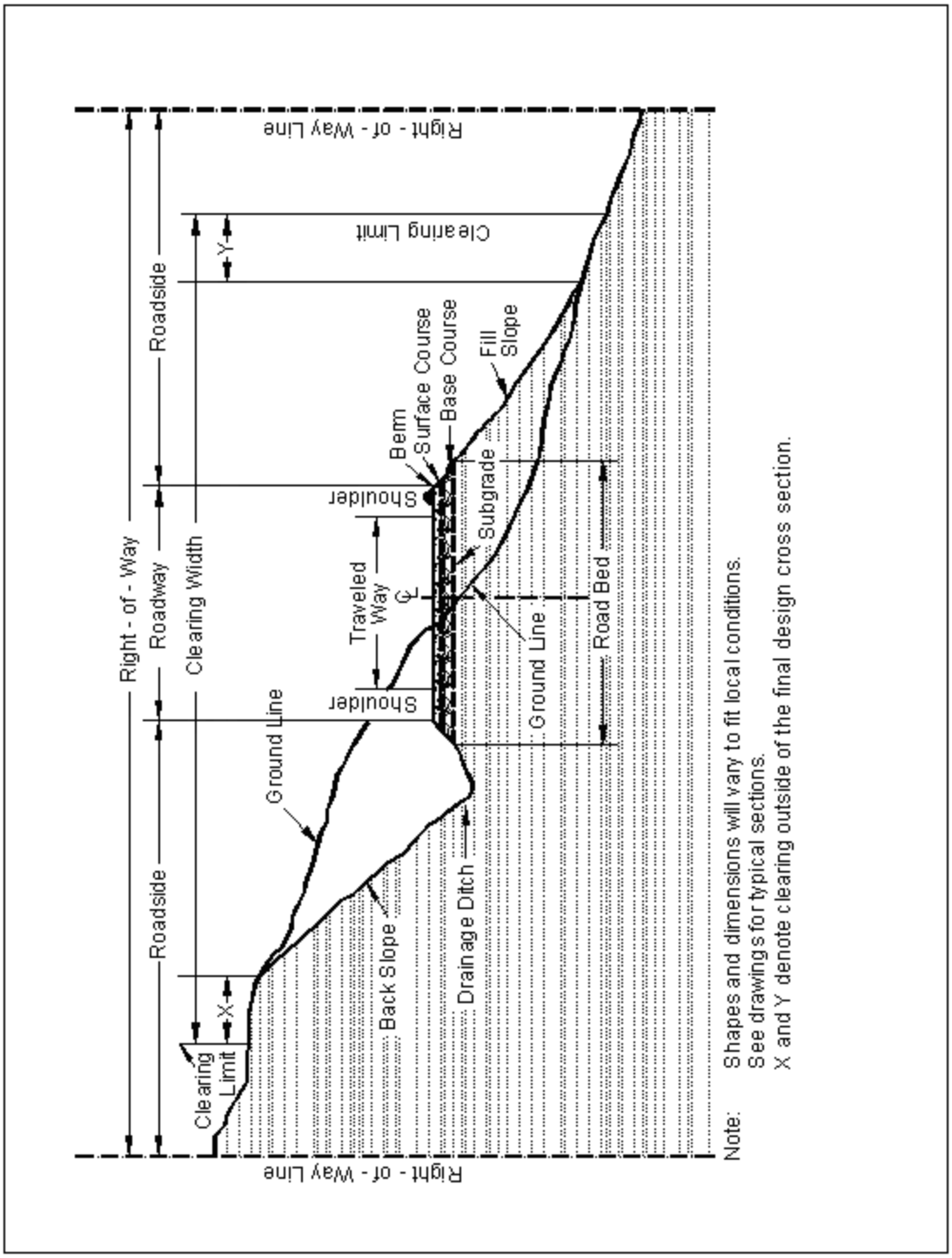

101.04 Definitions.

Delete the following definitions:

Contract Modification

Day

Notice to Proceed

Solicitation

102 - Bid, Award, and Execution of Contract

102.00_nat_us_02_16_2005

102 Bid, Award, and Execution of Contract

Delete Section 102 in its entirety.

103 - Scope of Work

103.00_nat_us_02_16_2005

Deletions

Delete all but subsection 103.01 Intent of Contract.

104 - Control of Work

104.00_nat_us_06_16_2006

Deletions

Delete Sections 104.01, 104.02, and 104.04.

104.06_nat_us_02_17_2005

Add the following subsection:

104.06 Use of Roads by Contractor

The Contractor is authorized to use roads under the jurisdiction of the Forest Service for all activities necessary to complete this contract, subject to the limitations and authorizations designated in the Road Order(s) or described in the contract, when such use will not damage the roads or national forest resources, and when traffic can be accommodated safely.

105 - Control of Material

105.02_nat_us_01_18_2007

105.02 Material Sources.

105.02(a) Government-provided sources.

Add the following:

Comply with the requirements of 30 CFR 56, subparts B and H. Use all suitable material for aggregate regardless of size unless otherwise designated. When required, re-establish vegetation in disturbed areas according to section 625.

105.05_nat_us_05_12_2004

105.05 Use of Material Found in the Work.

Delete 105.05 (a) and (b) and the last sentence of the second paragraph and substitute the following:

Materials produced or processed from Government lands in excess of the quantities required for performance of this contract are the property of the Government. The Government is not obligated to make reimbursement for the cost of producing these materials.

106 - Acceptance of Work

106.07_nat_us_05_11_2004

106.07 Delete

Delete subsection 106.07.

107 - Legal Relations and Responsibility to the Public

107.05_nat_us_05_11_2004

107.05 Responsibility for Damage Claims.

Delete the entire subsection.

107.06_nat_us_06_16_2006

107.06 Contractor's Responsibility for Work.

Delete the following from the first paragraph.

"except as provided in Subsection 106.07".

107.08_nat_us_03_29_2005

107.08 Sanitation, Health, and Safety

Delete the entire subsection.

107.09_nat_us_06_16_2006

107.09 Legal Relationship of the Parties.

Delete the entire subsection.

107.10_nat_us_06_16_2006

107.10 Environmental Protection.

Add the following:

Design and locate equipment repair shops, stationary refueling sites, or other facilities to minimize the potential and impacts of hazardous material spills on Government land.

Before beginning any work, submit a Hazardous Spill Plan. List actions to be taken in the event of a spill. Incorporate preventive measures to be taken, such as the location of mobile refueling facilities, storage and handling of hazardous materials, and similar information. Immediately notify the CO of all hazardous material spills. Provide a written narrative report form no later than 24 hours after the initial report and include the following:

- Description of the item spilled (including identity, quantity, manifest number, and other identifying information).
- Whether amount spilled is EPA or state reportable, and if so whether it was reported, and to whom.

- Exact time and location of spill including a description of the area involved.
- Containment procedures.
- Summary of any communications the Contractor had with news media, Federal, state and local regulatory agencies and officials, or Forest Service officials.
- Description of clean-up procedures employed or to be employed at the site including final disposition and disposal location of spill residue.

When available provide copies of all spill related clean up and closure documentation and correspondence from regulatory agencies.

The Contractor is solely responsible for all spills or leaks that occur during the performance of this contract. Clean up spills or leaks to the satisfaction of the CO and in a manner that complies with Federal, state, and local laws and regulations.

108 - Prosecution and Progress

108.00_nat_us_02_16_2005

108 Delete.

Delete Section 108 in its entirety.

109 - Measurement and Payment

109.00_nat_us_02_17_2005

109 Deletions

Delete the following entire subsections:

109.06 Pricing of Adjustments.

109.07 Eliminated Work.

109.08 Progress Payments.

109.09 Final Payment.

109.02_nat_us_06_16_2006

109.02 Measurement Terms and Definitions.

(b) Contract quantity.

Add the following:

Contract quantities will be adjusted only when there are errors in the original design of 15% or more.

Change the following:

"(b) Cubic yard" to "(c) Cubic yard".

Add the following definition:

(p) Thousand Board Feet (Mbf). 1,000 board feet based on nominal widths, thickness, and extreme usable length of each piece of lumber or timber actually incorporated in the job. For glued laminated timber, 1,000 board feet based on actual width, thickness, and length of each piece actually incorporated in the job.

151 - Mobilization

151.03_nat_us_08_05_2005

151.03 Payment

Delete the entire subsection and add the following:

151.03 Payment

Mobilization is considered an indirect cost of this contract and will not be compensated as a separate work item.

155 - Schedules for Construction Contracts

155.00_nat_us_05_11_2004

155 Delete.

Delete Section 155 in its entirety.

249 - Composite Road Construction

249.00_0116_us_03_31_2005

Description

249.01 This work consists of clearing and grubbing, excavation and embankment, and removal of all construction slash including designated trees. During excavation and embankment, excavate and use borrow material; excavate drainage; shape the roadway, including approaches, turnarounds, ditches, and drainage dips; and place all excavated material, regardless of nature. Perform erosion control by furnishing and placing seed, fertilizer, mulch, and tackifer. Construct the roadway in conformance with the dimensions shown on the plans or designated by the CO.

Materials

249.02 Ensure that materials meet the requirements specified in the following section and subsection:

Seeding and Mulching	625
Stabilizing Emulsion Tackifers	713.02

Construction Requirements

249.03Clearing and Disposal. Protect construction stakes and construction control markers. Remove or treat all trees, snags, downed timber, brush, and stumps within the clearing limits according to the following specifications:

(a) Merchantable Timber. Treat according to Subsection 201.06

(b) Unmerchantable Timber. Treat according to Subsection 203.05 Method (i)

(c) Large Construction Slash. Treat construction slash larger than 3 inches in diameter and longer than 3 feet by one or more of the following methods, as shown on the plans:

(1) Method A. Incorporate construction slash in the embankment.

(2) Method B. Windrow construction slash inside the clearing limits. When slash is windrowed, place it approximately parallel to the roadway outside the toe of the fill slope.

(3) Method C. Scatter construction slash outside the roadway without damaging trees. Limb all logs. Place logs and stumps away from trees, positioned so they will remain in place and are not on top of one another.

(4) Method D. Construct piles that are free of soil, with smaller slash well mixed with larger slash. Buck unmerchantable logs into lengths less than 18 feet prior to placement in piles.

(5) Method E. Sidecast construction slash into the area below the roadway. Slash my be sidecast beyond the lower clearing limit not to exceed 10 feet.

(6) Method F. Bury construction slash within the roadway limits. Construct mats in layers and cover the mats with at least 18 inches of rock and soil.

(7) Method G. Construct piles of construction slash in the areas designated on the ground. Construct the piles so that burning does not damage standing trees. Burn the piles until all the material remaining in the pile is charred or ash.

(8) Method H. Bury the construction slash outside the roadway the locations designated on the ground. Construct mats in layers, and cover the mats with at least 18 inches of rock and soil. Slope the final surface to drain.

(9) Method J. Construct a debris mat of construction slash under the road subgrade. Use tree limbs, tops cull logs, split stumps, wood chunks, and other debris to form a mat. Place stumps upside down and blended into the mat.

Small Construction Slash. Construction slash less than 3 inches in diameter and less than 3 feet long may be incorporated into embankments so long as the material is distributed so that it does not result in concentrations or matting.

Immediately remove slash deposited in stream courses.

Fell all dead trees outside the clearing limits that lean toward the road and are sufficiently tall to reach the roadbed. Fell hazard or unstable live trees designated on the ground outside the clearing limits before felling timber in the immediate clearing vicinity.

Leave stump heights less than 1 foot or one-third of the stump diameter whichever is greater, measured on the side adjacent to the highest ground. Leave felled trees outside the clearing limits in place.

249.04 Pioneering. Do not undercut the final back slope during pioneer operations. Deposit material inside the roadway limits. Do not restrict drainage.

249.05 Grubbing. Grub within the specified limits. Stumps outside the grubbing limits remain if cut no higher than 1 foot or one-third of the stump diameter, whichever is greater, above the

original ground, measured on the uphill side, unless otherwise designated. Grub stumps that will protrude through the subgrade or have less than 6 inches of cover.

249.06 Excavation and Embankment. Construct the roadway to conform to the typical sections shown on the plans. Protect backslopes from being undercut. Embankment may be placed by side casting and end dumping.

Locate and use borrow material, and remove and treat unsuitable or excess material, as designated.

Place rocks that are too large to be incorporated in the embankment outside the traveled way on the downhill side such that they will not roll, obstruct drainage, or hinder roadbed use and maintenance.

Leave slopes that are to be seeded in a roughened condition.

Shape and finish the roadbed to the condition ordinarily accomplished by a crawler tractor with dozer blade to provide drainage of surface water. Do not permit individual rocks to protrude more than 4 inches above the subgrade of the roadbed. A motor grader finish is not required.

Observe a width tolerance of (+) 18 inches f or the traveled way.

249.07 Erosion Control. Perform erosion control measures, including seeding. Use methods and applications rates, and types of seed, fertilizer, mulch, and tackifer, as specified in Section 625. Apply materials uniformly to the areas to be treated..

Measurement

249.08 Measure the Section 249 items listed in the bid schedule according to Subsection 109.02.

Payment

249.09 The accepted quantities will be paid at the contract price per unit of measurement for the Section 249 pay items listed in the bid schedule. Payment will be full compensation for the work prescribed in this Section. See Subsection 109.05.

301 - Untreated Aggregate Courses

301.00_nat_us_03_03_2005

301 Title Change.

Change the title to: **Section 301 Aggregate Courses**

301.05_nat_us_05_17_2005

301.05 Compacting

Delete and replace with the following:

Compact each layer full width. Roll from the sides to the center, parallel to the centerline of the road. Along curbs, headers, walls, and all places not accessible to the roller, compact the material with approved tampers or compactors.

Compact the aggregate using one of the following methods as specified:

Compaction A. Operating spreading and hauling equipment over the full width of the travelway.

Compaction B. Operate rollers and compact as specified in Subsection 204.11(a)(1).

Compaction C. Moisten or dry the aggregate to a uniform moisture content between 5 and 7 percent based on total dry weight of the mixture. Operate rollers and compact as specified in Subsection 204.11(a)(1).

Compaction D. Compact to a density of at least 95 percent of the maximum density, as determined by AASHTO T 99, method C or D.

Compaction E. Compact to a density of at least 96 percent of the maximum density, as determined by the Modified Marshall Hammer Compaction Method (available upon request from USDA Forest Service, Regional Materials Engineering Center, P.O. Box 7669, Missoula, MT 59807).

Compaction F. Compact to a density of at least 95 per-cent of the maximum density, as determined by AASHTO T 180, method C or D.

Compaction G. Compact to a density of at least 100 percent of the maximum density as determined by the Modified Marshall Hammer Compaction Method (available upon request from USDA Forest Service, Regional Materials Engineering Center, P.O. Box 7669, Missoula, MT 59807).

For all compaction methods, blade the surface of each layer during the compaction operations to remove irregularities and produce a smooth, even surface. When a density requirement is specified, determine the in place density and moisture content according to AASHTO T 310 or other approved test procedures.

301.10_nat_us_03_03_2005

301.10 Payment

Delete the following:

adjusted according to Subsection 106.05

602 - Culverts and Drains

602.03_nat_us_09_06_2005

602.03 General.

Add the following:

Ensure that the final installed alignment of all pipe allows no reverse grades, and does not permit horizontal and vertical alignments to vary from a straight line drawn from center of inlet to center of outlet by more than 2 percent of pipe center length or 1.0 feet, whichever is less.

625 - Turf Establishment

625.05_nat_us_03_30_2005

625.05 Watering.

Delete the entire subsection

625.07_nat_us_02_25_2005

625.07 Seeding. (a) Dry method.

Remove the last sentence “Lightly compact the seedbed within 24 hours after seeding.”

625.07 Seeding. (b) Hydraulic method.

Add the following:

Apply fertilizer conforming to Subsection 713.03 at the rates shown in Table 625-1. Fertilize areas inaccessible to hydro-type equipment by hand.

Table 625-1. Fertilizer Application Rate. SEE DRAWINGS

Type	Quantity per Slurry Unit
: :	__lbs
: :	__lbs

Apply the seed mixture at the rate of _____ kilograms of live seed per _____ (hectare/slurry unit). Include a tracer material consisting of either wood fiber mulch or grass cellulose fiber mulch to provide visible evidence of uniform application. Add the tracer to the slurry at a rate of _____ (400 pound per acre or 100 pound per slurry unit). Seed areas inaccessible to hydro-type equipment by hand.

633 - Permanent Traffic Control

633.03_nat_us_03_03_2005

633.03 General.

Delete the subsection and add the following:

Furnish traffic control devices and guide signs according to the MUTCD, approved USDA-FS and state supplements, the current edition of USDA-FS EM-7100-15 Sign and Poster Guidelines for the Forest Service, and Standard Highway Signs published by FHWA. Submit the sign list for approval before ordering.

718 - Traffic Signing and Marking Material

718.05_nat_us_08_05_2009

718.05 Aluminum Panels

Delete the third paragraph and replace with the following:

Clean, degrease and properly prepare the panels according to methods recommended by the sheeting manufacturer. Conversion coatings will conform to ASTM B-921 or ASTM B-449.