Individual T-Specifications listed below and attached are not individually page numbered.

T-SPECIFICATION LIST		
		Last Revision Date
Spec. No.	Title	
T-803	Snow Removal	05/07
T-803-01F	SPS Snow Removal	06/03
T-811	Blading	10/07
T-812	Dust Abatement	05/09
T-812-01F	SPS Dust Abatement	06/03
T-831	Ditch Maintenance	10/07
T-832	Remove and End Haul Materials	05/07
T-832-01F	SPS Remove and End Haul Materials	06/03
T-834	Drainage Structure Maintenance	10/07
T-834-01F	SPS Drainage Structure Maintenance	06/03
T-835	Roadway Drainage Maintenance	05/07
T-835-01F	SPS Roadway Drainage Maintenance	06/03
T-838	Maintenance For High Clearance Vehicle Use	05/07
T-839	Maintenance For Project Use	05/07
T-842	Cutting Roadway Vegetation	10/07
T-851	Logging Out	05/07
T-854	Treatment and Disposal of Danger Trees	04/10
T-891	Water Supply and Watering	05/07
T-891-01F	SPS Water Supply and Watering	06/03
Drawing No.	Title	
T-801-1	Road Structure Details	06/03
T-834	Typical Section of Catch Basins and Transition Areas	06/03
T-835-01	Drivable Water Barrier Details	06/03
T-835-02	Standard Detail for Water Bar	06/03

ROAD STRUCTURE DETAILS

NO SCALE

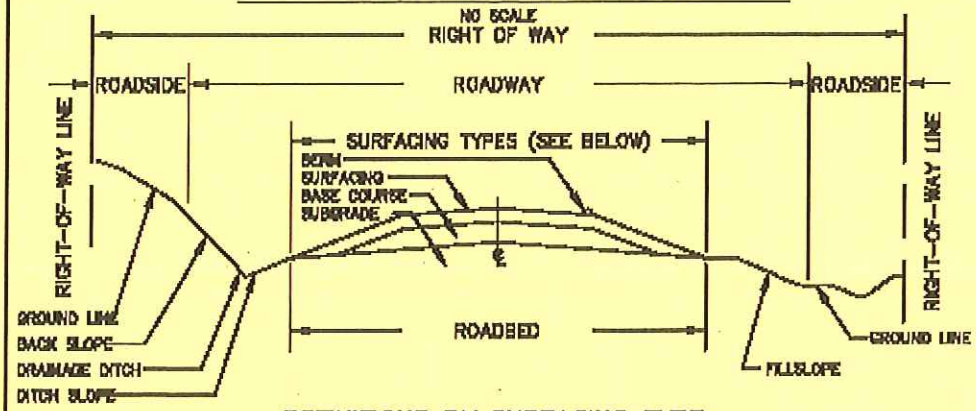

DEFINITIONS BY SURFACING TYPE

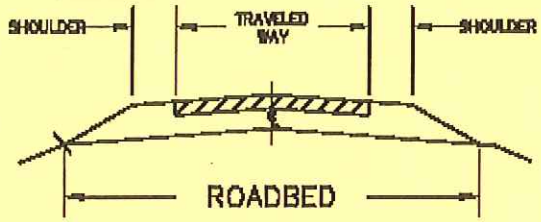

ASPHALT PAVED SURFACING SECTION

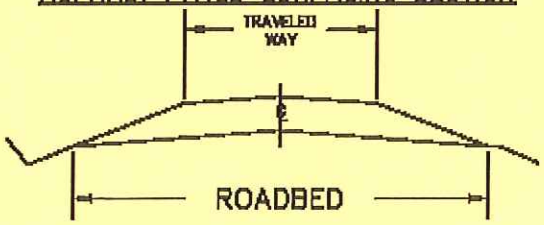

AGGREGATE SURFACING SECTION

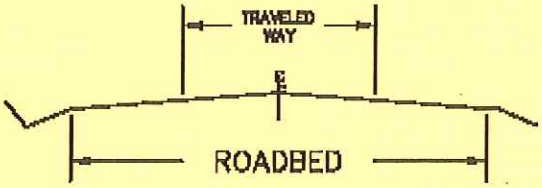

NATIVE MATERIAL SURFACING SECTION

NOTES

SHAPES AND DIMENSIONS WILL VARY WITH LOCAL CONDITIONS

TITLE ILLUSTRATION OF ROAD MAINTENANCE TERMS		
DRAWING 801-1	APPROVED	

T-803 - SNOW REMOVAL (05/07)

803.01 Description

This Section provides for removal of snow from roads to facilitate logging operations and safe use.

803.02 Maintenance Requirements

(1) Erect signs required by the Sign Plan in the SUPPLEMENTAL SPECIFICATIONS.

(2) Perform work in a manner to preserve and protect roads and appurtenances, and prevent erosion damage to roads, streams, and other Forest values.

(3) Do not undercut banks. Do not blade gravel or other surfacing material off the road.

(4) Keep roadbed drainage ditches, drain dips, and culverts functional when needed during operations and upon completion of operations.

(5) Control snow removal to identify the usable traveled way having roadbed support. Reshape over-width plowing as necessary to define the usable width.

(6) Space, construct, and maintain drainage holes in the dike of snow or berm caused by snow removal operations. Place drain holes to obtain surface drainage without discharging on erodible fills.

(7) Close roads to wheeled vehicles at times and in the manner specified in KT-FT.12# or the Road Rules document.

(8) Upon seasonal completion of Purchaser's Operations, effectively block the road by a snow barricade, unless otherwise approved by the Contracting Officer.

(9) Remove snow for either public access or project use as established in the SUPPLEMENTAL SPECIFICATIONS and meet the following requirements:

(a) Removal for Public Access (Method JU) - Remove snow from all of the traveled way, including turnouts, for safe and efficient use for both timber transportation and the public. Remove intruding windfalls, debris, or slough and slide material for the full width of the traveled way and deposit out of drainage's at locations designated by the Contracting Officer.

(b) Removal for Project Use (Method TS) - Remove snow from all or part of the traveled way, including sufficient turnouts for safe and efficient use for timber transportation and to protect the road. Remove intruding windfalls, debris or slough and slide material and dispose of only as necessary to provide passage for timber transportation. Removed materials may be deposited off the traveled way or outside the traveled way at locations designated by the Contracting Officer.

(10) When directed by the Contracting Officer, replace in kind, within sixty (60) days after the start of Normal Operating Season, any surfacing material which has been bladed off the road, unless otherwise agreed. Contracting Officer will notify Purchaser in writing as to the cubic yard equivalent of bladed off material by the start of the normal operating season.

803.03 Equipment

Purchaser may use any type of equipment to remove snow, providing:

a. Type or use of equipment is not restricted in KT-FT.12# or Road Rules document.

b. Equipment is of the size and type commonly used to remove snow and will not cause damage to the road.

c. The use of plows or dozers to remove snow requires written approval by the Contracting Officer. Equip plows or dozers with shoes or runners to keep the dozer blade a minimum of 2 inches above the road surface unless otherwise approved by the Contractor Officer.

803.04 Ice Control

Ice control may be performed by Purchaser when approved by the Contracting Officer in writing. Such approval will include ice control materials, application rates, and any specific requirements of use.

SPECIAL PROJECT SPECIFICATION (6/03)
T-803-01F
SNOW REMOVAL

803.02 Maintenance Requirements

a. Delete the paragraph and add the following: The Traffic Control Plan specified in GT.3.3 Safety will be amended as needed for snow removal operations under b. (9) (a) or (b).

b. (1) Delete the sentence and add the following: Erect signs required by the amended Traffic Control Plan and Drawings specified in GT.3.3 Safety.

(9) Delete the sentence and add the following: Remove snow for either public access or project use as listed in KT-FT.3.1# Road Maintenance Requirements, and meet the requirements set forth in the amended Traffic Control Plan.

T-811 BLADING (10/07)

811.01 Description

This work consists of surface blading the traveled way to a condition that facilitates traffic and provides proper drainage. Blading includes shaping the crown or slope of travel way, berms, and drainage dips in accordance with this specification. Compaction is required when shown on the ROAD LISTING.

811.02 Maintenance Requirements

A. Timing - Perform surface blading during the contract period as often as needed to provide conditions stated for the maintenance level of the road.

B. General

1. Blade and shape the existing traveled way and shoulders, including turnouts , to produce a surface which is uniform, consistent to grade, and crowned or cross-sloped as indicated by the character of the existing surface, unless otherwise shown in the ROAD LISTING, to at least ½ inch per 1 foot of width, but not more than ¾ inch per 1 foot of width. Thoroughly loosen surfacing material to no less than 2 inches depth or the depth of potholes or corrugations. Scarification to facilitate cutting to the full depth of potholes or corrugations may be elected, but will be considered incidental to blading. Do not scarify to a depth that will cause contamination of the surfacing.

2. Apply water during blading when sufficient moisture is not present to prevent segregation. Supply, haul, and apply water in accordance with Section T-891.

3. Shape existing native rock or aggregate surfaced drainage dips to divert surface runoff to existing outlet devices, ditches, or discharge locations.

4. Establish a blading pattern which provides a uniform driving surface, retains the surfacing on the roadbed, and provides a thorough mixing of the materials within the completed surface width. Upon final blading, no disturbed rock shall protrude more than 2 inches above the adjacent surface unless otherwise provided in the contract. Remove and place outside the roadbed, material not meeting this dimension so as not to obstruct drainage ways or structures. This material may be scattered off the roadbed if there is free drainage.

5. Where DESIGNATED ON THE GROUND, included in the ROAD LISTING, SHOWN ON THE DRAWINGS or as ordered by the Contracting Officer invasive species of concern prevention practices shall be followed as listed below.

Invasive Species of Concern Prevention Practices
Avoidance

C. Routine Blading

1. Conform to the dimensions SHOWN ON THE DRAWINGS or designated in the SUPPLEMENTAL SPECIFICATIONS upon completion of blading.

2. Shape roadbed width in excess of the dimensions shown only as needed to provide drainage away from the traveled way. Do not remove established grasses and other vegetation from the excess width except as incidental to providing drainage or unless otherwise provided in the contract.

D. Compaction

Roads requiring compaction will be included in the ROAD LISTING. Unless Compaction Method B is designated in the ROAD LISTING, all traveled ways requiring compaction may be compacted by Method A. Compaction shall commence immediately following blading.

Compaction methods are:

Compaction Method A: Breaking track while operating equipment on the traveled way.

Compaction Method B: 7-10 ton pneumatic, steel, or equivalent vibratory roller, operated to cover the full width two (2) times.

E. Undercutting - Undercutting roadway back slope is not permitted.

F. Intersections

1. At intersections, blade the roadbeds of side roads which are not closed or restricted from vehicular use to ensure smooth transitions.

2. Signing, cross ditching in the road surface (traveled way), earth berms, or other devices placed to discourage or eliminate use by passenger cars, are field evidence of road closure or restriction. Roads listed for work under Sections T-835, T-836, T-838, or T-839 are considered restricted.

3. Side roads listed for work under this Section are not restricted.

G. Cleaning of Structures - Do not allow materials resulting from work under this Section to remain on or in structures, such as bridges, culverts, cattle guards, or

drainage dips.

H. Berms - Maintain existing berms to the condition of adjacent segments. Do not create new berms.

I. Smooth Blading - Smooth blading may be used as an interim measure to remove loose surfacing material from the wheel paths, and store removed materials in a recoverable windrow, until blade processing as described in this section is feasible. Watering will not be required for smooth blading. Accomplish smooth blading without distorting the existing cross-slope or crown of the traveled way.

Move and store loose surfacing materials on the high side of super-elevated curves and sections with uniform inslope or outslope. In crowned sections, store the material on either or both sides as elected. Windrow and place stored materials to provide not less than 12 feet of smooth traveled way on one-lane segments, or 20 feet of smooth traveled way on two-lane segments, or segments with turnouts. Cut holes through windrows, which may collect water on the road, for drainage at least every 500 feet.

T-812 - DUST ABATEMENT (05/09)

812.01 Description

This work consists of applying dust palliatives on roads shown in the Road Listing.

812.02 Materials

The dust palliative materials are shown in the Road Listing, unless shown as Optional for Purchaser's election. If Optional is shown then the Purchaser may use any of the products listed below. Dust palliative materials shall meet the following requirements:

A. Water (H2O) will be obtained from sources SHOWN ON THE DRAWINGS or listed in the SUPPLEMENTAL SPECIFICATIONS to Section T-891 Water Supply, unless otherwise approved by the Contracting Officer.

B. Lignin Sulfonate (LIG S) Provide certification that the material meets the requirements of Subsection 725.20 of the "Standard Specifications for Construction of Roads and Bridges on Federal Highway Projects (FP-03)" and the Forest Service Supplemental Specification 725.20.

C. Magnesium Chloride (MG CL2) Provide certification that that the material meets the requirements of Subsection 725.02 of the "Standard Specifications for Construction of Roads and Bridges on Federal Highway Projects (FP03) " and the Forest Service Supplemental Specification 725.02.

D. Calcium Chloride Brine (CA CL2B). Provide certification that the material meets the requirements of Subsection 725.02 of the " Standard Specifications for Construction of Roads and Bridges on Federal Highway Projects (FP03) " and the Forest Service Supplemental Specification 725.02.

E. Calcium Chloride Flake (CA CL2F). Provide certification that that the material meets the requirements of Subsection 725.02 of the "Standard Specifications for Construction of Roads and Bridges on Federal Highway Projects (FP03) " and the Forest Service Supplemental Specification 725.02.

F. Bituminous dust palliatives. Manufacture materials specifically for dust abatement purposes which conform to the requirements of Section T-892 for each listed road in the Road Listing.

812.03 Methods

As shown in the SUPPLEMENTAL SPECIFICATIONS, Purchaser may utilize a variety of methods to decrease or eliminate the need for dust abatement.

812.04 Equipment

A. Design, equip, and operate application equipment for spreading dust palliatives so that the material is uniformly applied at the rate and traveled way widths shown in the Road Listing.

B. For bituminous palliatives provide equipment that heats and applies the bituminous material. Provide a bituminous distributor that is self-powered and mounted on pneumatic tires and equipped with a pump and circulating spray bar, a tachometer, pressure gauges, accurate volume measuring devices such as visual volume dial or gauge calibrated to the tank, and a thermometer. Provide equipment which is a standard commercial type of proven performance.

C. Accomplish dilution of dust palliatives within the application vehicle with the water source protected from contamination. Circulate the resulting mixture at least five (5) minutes to ensure uniform mixing prior to application.

812.05 Maintenance Requirements

A. Limit water applications to abatement for hauling vehicles and provide at a frequency and rate which controls dust such that vehicle tail lights and turn signals remain visible. Vary rates of application as needed but remain low enough to avoid forming rivulets. Accomplish the abatement by sufficient frequency of application without saturating and softening the traveled way. Compacted or glazed road surface or wheel tracks may be loosened as needed for water penetration.

B. Apply all other dust palliatives at the rates and times agreeable to the Contracting Officer. The Road Listing shows the expected average application rate and may be varied to meet field conditions. Lignin Sulfonate, Magnesium Chloride, and Calcium Chloride Brine are listed as gallons per square foot of the undiluted product at fifty (50), thirty-three (33), and thirty-eight (38) percent respectively. Calcium Chloride Flake is listed in pounds per square foot at seventy-seven (77) percent concentration.

C. Apply bituminous dust palliatives only when the surface to be treated contains sufficient moisture to obtain uniform distribution of the dust palliative unless noted differently in the SUPPLEMENTAL SPECIFICATIONS.

D. Prior to initial application, when needed, the road will be bladed and shaped under Section T-811, Blading.

E. Required subsequent applications may be applied to the existing road surface without blading.

F. Dust palliatives will not be applied in a manner that spatters or mars adjacent structures or trees, or placed on or across cattleguards or bridges. Discharge dust abatement material only on roads approved by the Contracting Officer.

SPECIAL PROJECT SPECIFICATION (6/03)
T-812-01F
DUST ABATEMENT

812.03 Methods

Delete the words "As shown in the SPECIAL PROJECT SPECIFICATIONS" and substitute the following: Roads to be treated with dust abatement are listed in KT-FT.3.1# Road Maintenance Requirements.

T-831 DITCH MAINTENANCE (10/07)

831.01 Description

This Section provides for routine maintenance of various types of ditches to provide a waterway which is unobstructed, as shown on the ROAD LISTING or DESIGNATED ON THE GROUND.

831.02 Maintenance Requirements

A. Maintain ditches by removing rock, soil, wood, and other materials. Maintained ditches shall function to meet the intent of the original design.

B. Undercutting backslopes during removal operations is not permitted.

C. Suitable material up to 4 inches in greatest dimension removed from the ditches may be blended into existing native road surface and shoulder or placed in designated berm.

D. Do not blend material from ditch cleaning operations into aggregate surfaced roads. Do not blade material across aggregate or bituminous surfaced roads, unless approved in writing by the Contracting Officer.

E. Haul material in excess of 831.02 D or subject to 831.02 E to a designated waste area under Section T-832. Remove excess materials temporarily stored on the ditch slope or edge of the shoulder daily.

F. Remove limbs and wood chunks in excess of 12 inches in length or 3 inches in diameter from ditches and place outside the roadway.

G. Clean paved surfaces of all materials resulting from ditch maintenance work.

H. Shape lead-off ditches to drain away from the traveled way.

I. Where DESIGNATED ON THE GROUND, included in the ROAD LISTING, SHOWN ON THE DRAWINGS or as ordered by the Contracting Officer invasive species of concern prevention practices shall be followed as listed below.

Invasive Species of Concern Prevention Practices
Avoidance

T-832 REMOVE AND END HAUL MATERIALS (05/07)

832.01 Description

Work consists of loading, hauling, and placing of slide, slough, or excess materials such as rock, soil, vegetation, and other materials to designated disposal sites.

832.02 Maintenance Requirements

A. Remove, end haul, and dispose of excess materials generated by work under other Sections of this contract.

B. Remove the slide and slough materials in the area extending approximately 6 feet vertically above the road surface and not more than 3 feet down slope from the roadbed. Dispose of material at designated sites as SHOWN ON THE DRAWINGS, identified in SUPPLEMENTAL SPECIFICATIONS, or as ordered by the Contracting Officer.

Reshape the slope which generated the slide material as nearly as practical to its original condition by equipment operating from road surface. Reshaping of roadside ditches in slide area shall be in accordance with Section T-831.

C. When approved by the Contracting Officer, fill slumps by compacting selected materials into roadway depressions. Compaction is by Method 2.

D. Place all materials in disposal sites as specified in the SUPPLEMENTAL SPECIFICATIONS, as SHOWN ON THE DRAWINGS, or as ordered by the Contracting Officer.

1. Method 1 - Side Casting and End Dumping. Material may be placed by side casting and end dumping. Where materials include large rocks, provide a solid fill by working smaller pieces and fines into voids. Shape the finished surfaces to drain.

2. Method 2 Layer Placement - Step or roughen surfaces on which materials are to be placed prior to placing any material. Place materials in approximately horizontal layers no more than 12 inches thick. Compact each layer by operating hauling and spreading equipment over the full width of each layer.

E. Repair any damage to existing aggregate or pavement surfaces.

SPECIAL PROJECT SPECIFICATION (6/03)
T-832-01F
REMOVAL AND END HAUL MATERIALS

832.02 Maintenance Requirements

B. Add the following after the first sentence: Disposal of slough material shall be at the_____Six Corners_____ aggregate source, T.14S., R.24E., (Road 4200-790), Section 32 on roads listed in KT-FT.3.1# Road Maintenance Requirements. (*See Forest Geologist for specific waste placement instructions prior to hauling waste material*)

D. Add the following after the first sentence: Specified method shall be Method__1_.

T-834 DRAINAGE STRUCTURE MAINTENANCE (10/07)

834.01 Description

This work consists of cleaning and reconditioning culverts and other drainage structures.

834.02 Maintenance Requirements

A. Clean drainage structures, inlet structures, culverts, catch basins, and outlet channels specified in the SUPPLEMENTAL SPECIFICATIONS. Clean catch basins by removing the material within the area SHOWN ON THE DRAWINGS.

B. Clean the transition from the ditch line to the catch basin a distance of 10 feet from the catch basin. Clean outlet channels and lead-off ditches a distance of 6 feet. Remove and place debris and vegetation so as to not enter the channel or ditch, or obstruct traffic. Haul debris and vegetation to a designated disposal area in accordance with Section T-832.

C. Hydraulic flushing of drainage structures is not allowed unless provided for in the SUPPLEMENTAL SPECIFICATIONS.

D. Cleaning and reconditioning are limited to the first 3 feet of inlet and outlet, determined along the top of the structure. Recondition culvert inlet and outlet by field methods such as jacking out or cutting away damaged metal which obstructs flow. Treat cut edges with a zinc rich coating, in accordance with AASHTO M 36M and ASTM A 849.

E. Where DESIGNATED ON THE GROUND, included in the ROAD LISTING, SHOWN ON THE DRAWINGS or as ordered by the Contracting Officer invasive species of concern prevention practices shall be followed as listed below.

Invasive Species of Concern Prevention Practices
Avoidance

SPECIAL PROJECT SPECIFICATION (6/03)
T-834-01F
DRAINAGE STRUCTURE MAINTENANCE

834.02 Maintenance Requirements

A. Delete the words "specified in the SPECIAL PROJECT SPECIFICATIONS" and substitute the following: on those roads listed in KT-FT.3.1# Road Maintenance Requirements.

TYPICAL SECTION OF CATCH BASINS AND TRANSITION AREAS

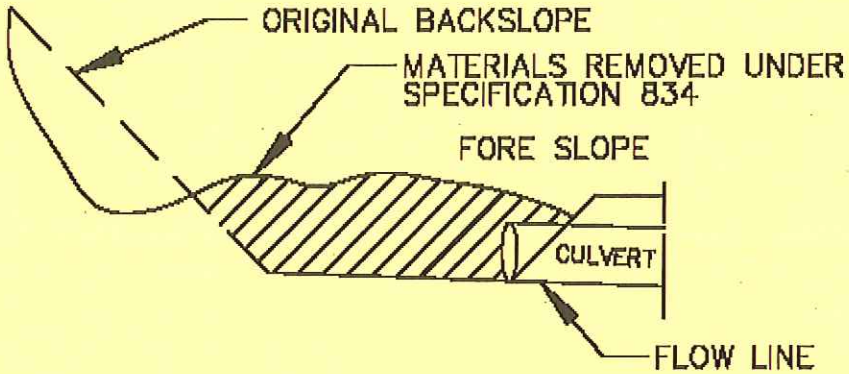

CROSS SECTION VIEW

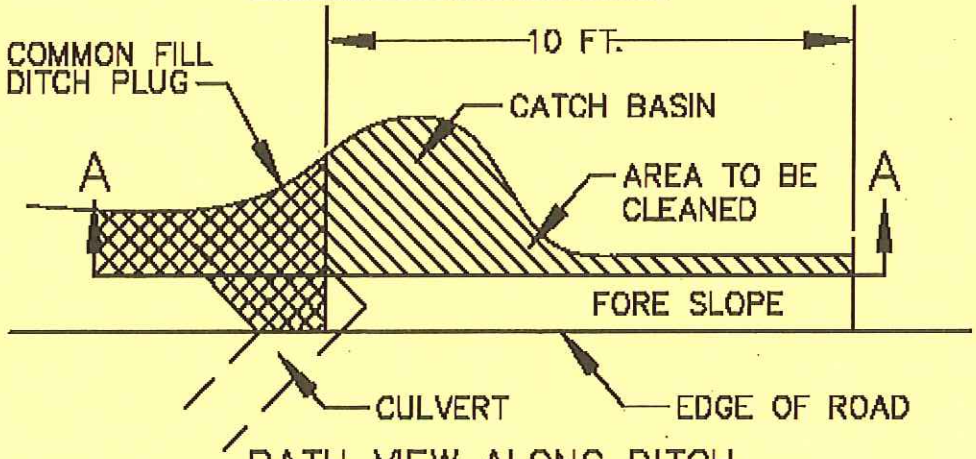

PATH VIEW ALONG DITCH

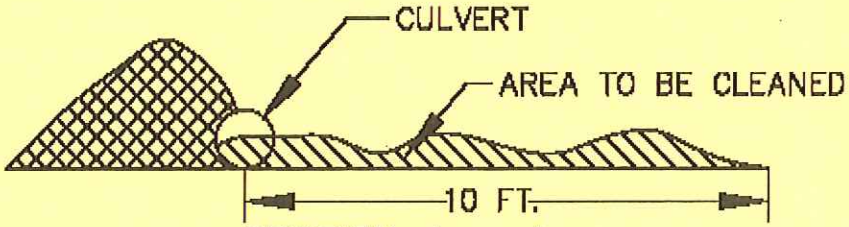

SECTION A – A

TITLE	CLEANING OF DITCH RELIEF CATCH BASIN AND TRANSITION	
DRAWING 834–1	APPROVED	

T-835 ROADWAY DRAINAGE MAINTENANCE (05/07)

835.01 Description

This work consists of providing post haul drainage on roads.

835.02 Maintenance Requirements

A. Drainage

1. Upon completion of work, shape the roadway to provide for the removal of surface water. The roadway need not be passable to vehicles. Repair and reinstall water bars, barriers or berms existing prior to the Purchaser's operation. Areas where water is ponded by existing centerline profile sags in through cuts may be left untreated.

2. Continuous blade shaping of the roadbed is not required under this specification.

3. Work to be done at staked locations shall be as indicated on the stake and/or stated in SUPPLEMENTAL SPECIFICATIONS:

4. Any of the following methods are acceptable for use at eroded or rutted locations:

Method A: Outsloping the roadbed at not less than ½ inch per yard of width.

Method B: Insloping the roadbed at not less than ½ inch per yard of width.

Method C: Water bar roadbed at locations staked on the ground and construct as SHOWN ON THE DRAWINGS or as included in SUPPLEMENTAL SPECIFICATIONS.

5. Drainage structures located in through fills and natural watercourses shall be fully functional without obstructions, including inlet and outlet channel within 20 feet of the structure.

6. Either clean culverts and other fabricated structures to provide drainage from road ditches and make the ditch functional or provide water bar(s) across the roadbed. Removed structures shall become Purchaser's property to be removed from National Forest System land. Remove and replace any purchaser-installed temporary drainage structures with a water bar.

B. Slides, Slumps and Slough

1. Slides and slough may be left in place, provided they do not potentially impound water or divert water from watercourses. As necessary, reshape the various surfaces to provide drainage.

2. Provide drainage to effectively decrease or eliminate the entry of surface water into slides, slumps, and roadbed surface cracks. Place berms, waterbars or ditches as needed to intercept and remove runoff water from the roadbed. Surface seal cracks by covering over with native soil materials to prevent additional water entry and compact with equipment tires.

C. Entrance Devices

Upon completion of work, replace entrance devices to effectively eliminate access by motorized vehicles having four (4) wheels and a width in excess of 50 inches.

D. Seeding

Seed and fertilize all disturbed areas in accordance with requirements set forth in Section T-841.

SPECIAL PROJECT SPECIFICATION (6/03)
T-835-01F
ROADWAY DRAINAGE MAINTENANCE

835.02 Maintenance Requirements

A. Drainage

3. Add the following after the first sentence: Or reestablish existing drainage structures on those roads listed in KT-FT.3.1# Road Maintenance Requirements.

ROAD NUMBER	SHEETS	TOTAL SHEETS

T-835

DRIVEABLE WATERBARRIER DETAILS

NO SCALE

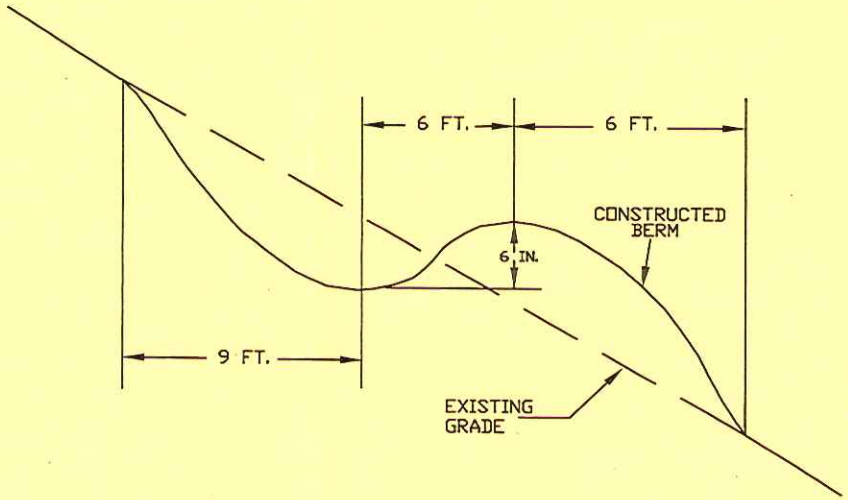

PROFILE VIEW

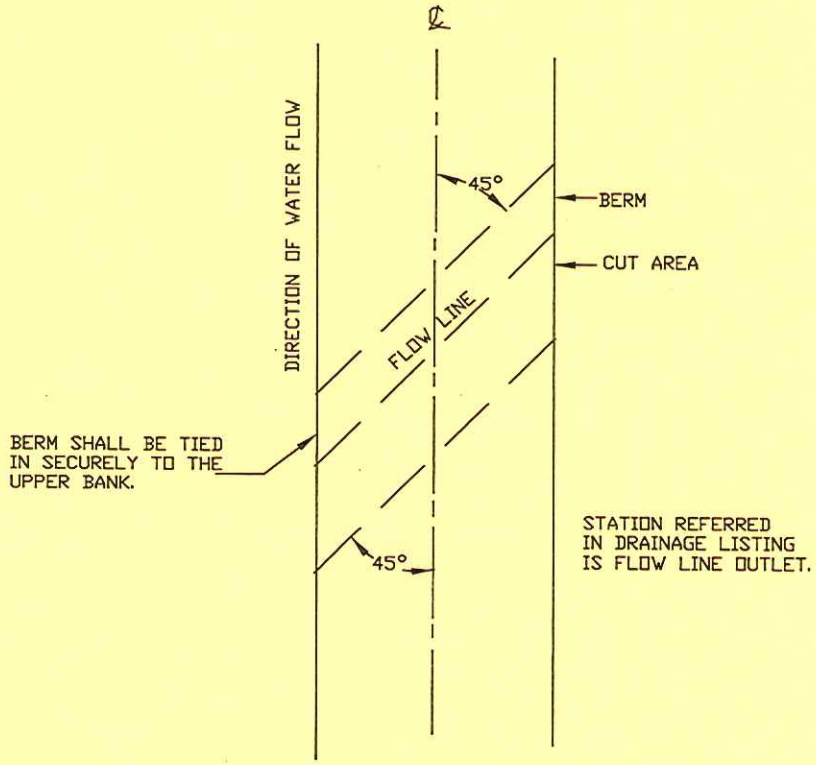

PLAN VIEW

835-1

waterbarrier.dwg

SHEET	TOTAL SHEETS

T–835

NO SCALE

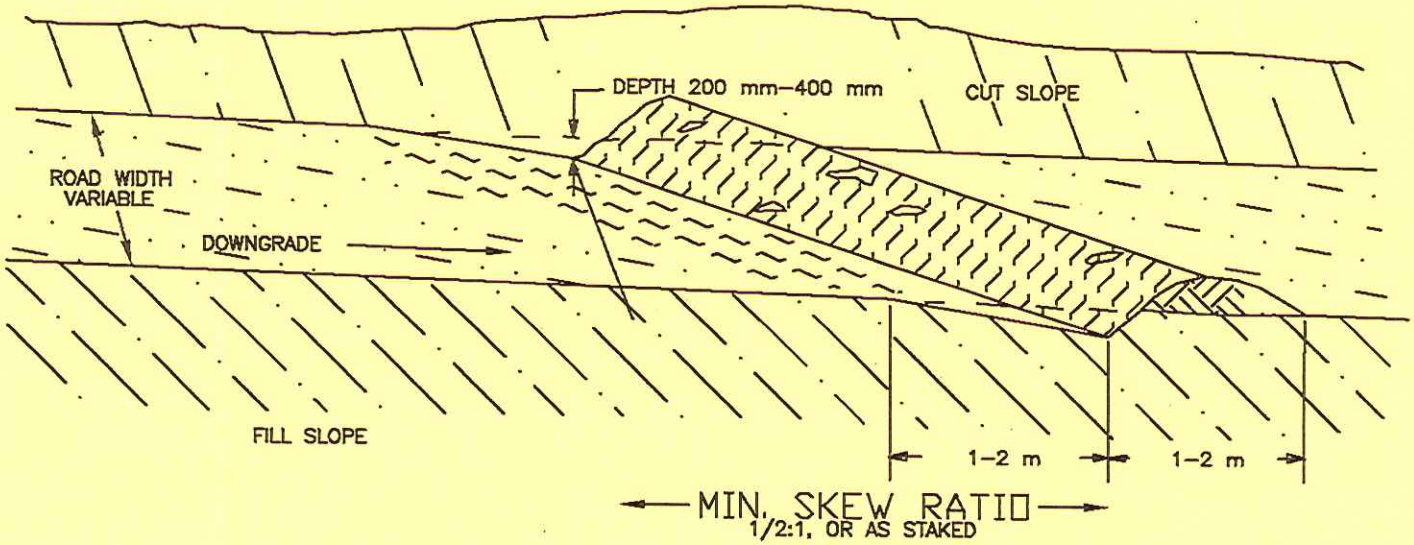

NOTES

1. ALL WATER BARS SHALL BEGIN AT THE INTERSECTION OF THE ROADBED AND CUT SLOPE AND RUN ACROSS THE ENTIRE WIDTH OF THE ROADBED.
2. ALL WATER BARS SHALL HAVE FREE FLOWING OUTLETS.
3. WHEN STAKES ARE USED, THEY DESIGNATE THE OUTLET LOCATION.

835–2

Version 1
5/7/97

WAW00008.DWG

U.S. DEPARTMENT OF AGRICULTURE
DESCHUTES/OCHOCO NATIONAL FORESTS

STANDARD DETAIL FOR
WATER BAR

RECOMMENDED BY:

FOREST DEVELOPMENT ENGINEER — DATE

APPROVED BY:

FOREST ENGINEER — DATE

T-838 MAINTENANCE FOR HIGH CLEARANCE VEHICLE USE (05/07)

838.01 Description

This work consists of making limited use roads passable for project use by Purchaser and providing drainage from the traveled way and roadbed.

838.02 Maintenance Requirements

A. Traveled Way

Purchaser may smooth or fill existing cross ditches and water bars and as approved by the Contracting Officer modify existing road junctions to enable vehicle access. The Purchaser may perform the following work prior to beginning haul and resumption of haul after an extended stoppage:

1. Remove brush, fallen trees, rocks, and other debris from traveled way, including turnouts, turnarounds, and other locations that interfere with needed maintenance as follows:

a. No object extending over 4 inches above the road surface shall remain within the 12 feet usable traveled way. Center the usable width on the roadbed or position away from the fill slope.

b. Cut and remove standing or down trees, logs, brush, and limbs from within the area described in 1(a). Remove encroaching limbs to a height of 14 feet above the traveled way surface. Scatter material not meeting utilization standards outside and below the roadbed on the fill side. Limb and remove timber that meets utilization standards or deck at locations approved by the Contracting Officer.

c. Place all removed materials away from drainages.

d. During use, maintain drainage structures including dips, ditches and culverts in a usable condition.

2. Clean and recondition drainage facilities in accordance with Section T-831 and T-834.

B. Slough and Slides

1. Slough and slides may be left in place, provided surface drainage is provided and at least 12 feet of width is available for vehicle passage.

2. Purchaser may reposition or ramp over slides and slough when the traveled way width is less than 12 feet providing the material is capable of supporting vehicles. Limit out slope to no more than six percent.

3. Reposition slough or slide materials, which are not capable of supporting a vehicle, on the roadbed to provide the 12 feet width. When directed by the Contracting Officer, slough or slide material will be removed under Section T-832.

C. Slumps and Washouts

1. Drain the roadbed immediately upgrade of slumps and longitudinal cracks to prevent water from entering slump area.

2. Slumps and longitudinal cracks at the edge of the roadbed shall not be considered a part of the usable width. Usable width may be reduced to 10 feet in the area of the slump.

3. Unless the Contracting Officer approves material being placed on slumps, ramp the slumps on both ends into undisturbed roadbed to provide at least 10 feet usable width. Use removed materials to guide vehicles to the ramp location or to aid in draining the area.

4. Washouts may be filled with suitable material.

D. Post haul

At the end of hauling or prior to entering into seasonal shutdowns or a period of extended inactivity:

1. Shape the traveled way and disturbed roadbed to provide functional drainage.

2. Reinstall removed cross ditches and water bars and provide any additional drainage structures necessary to offset changes caused through use and maintenance.

3. Leave roads useable for high clearance vehicles. Remove or reshape purchaser modifications at road junctions to leave the entrance as it was before use, or as agreed at the time of improvement.

T-839 MAINTENANCE FOR PROJECT USE (05/07)

839.01 Description

Work consists of providing minimum access required for Purchaser's Operations and associated Forest Service contract administration and preventing unacceptable resource or road damage.

839.02 Maintenance Requirements

A. Purchaser is authorized to perform the following maintenance to provide vehicle passage and drainage:

1. Removing log, earth, and rock barriers and/or improving existing road junctions to enable vehicle access as mutually agreed.

2. Smoothing or filling existing cross ditches and water bars.

3. Installing Purchaser-furnished culverts or other temporary drainage structures for shallow stream crossings as approved by the Contracting Officer.

4. Removing brush, fallen trees, rocks, and other materials from the traveled way and other locations that interfere with needed maintenance:

   a. Place all removed materials away from drainages.

   b. Limb and remove timber which meets utilization standards or deck at locations approved by the Contracting Officer. Scatter other woodymaterials, including limbs, off of and below the roadbed without creating concentrations.

5. Clean and recondition drainage structures in accordance with Section T-831 and Section T-834.

6. Reposition or ramp over slough and slides to provide adequate width of traveled way material.

7. Provide traveled way drainage above slumps and seal cracks in slump area. Ramp the slumps on both ends into undisturbed roadbed to provide usable width unless otherwise ordered by the Contracting Officer.

B. During use, the traveled way shall not channel water along the road. Prior to seasonal periods of anticipated rains and runoff, perform the following work:

1. Shape the traveled way and roadbed to drain.

2. Reinstall removed cross ditches and water bars and provide any additional drainage structures necessary to offset changes through use and maintenance.

3. Perform work outlined in 839.02 A (5), (6), and (7).

4. During periods of non use, replace original barrier or provide and maintain standard MUTCD, Type 3, barricades unless alternate type barriers are approved by the Contracting Officer.

839.03 Post Haul Requirements

A. Upon completion of project use perform such work as needed to reasonably conform to the character of the existing road prior to Purchaser's maintenance for project use, unless otherwise provided in the SUPPLEMENTAL SPECIFICATIONS or the Road Listing. Work shall be in addition to requirements of 839.02 B and in accordance with 839.03 B and C.

B. Roads designated in the Road Listing to be blocked shall conform to the requirements of Section T-835. Unless otherwise approved by the Contracting Officer, remove Purchaser-installed temporary structures from National Forest System land. Associated commercially-obtained materials shall remain the property of the Purchaser.

C. Remove or reshape Purchaser improvements at road junctions, as approved by the Contracting Officer at the time of improvement.

T-842 CUTTING ROADWAY VEGETATION (10/07)

842.01 Description

This work consists of cutting all vegetative growth, including trees and other vegetation less than 4 inches in diameter measured 6 inches above the ground, on roadway surfaces and roadsides.

842.02 Maintenance Requirements

A. General

1. Cut brush, trees, and other vegetation within each area treated to a maximum height of 6 inches above the ground surface or obstruction such as rocks or existing stumps. When work is performed under this Section, remove all limbs which extend into the treated area, or over the roadbed, to a height of 14 feet above the traveled way surface elevation.

2. Items to remain will be DESIGNATED ON THE GROUND.

3. Work may be performed either by hand or mechanically unless specifically shown in the Road Listing. Self-propelled equipment is not allowed on cut and fill slopes or in ditches.

4. Correct damage to trunks of standing trees caused by Purchaser's operation either by treatment with a commercial nursery sealer or by removing the tree as directed by the Contracting Officer.

5. Limb trees within the cutting limits which are over 4 inches -measured at 6 inches above the ground in lieu of cutting.

6. When trees are limbed, cut limbs within 4 inches of the trunk.

B. Cutting Side Vegetation

1. Show the width of vegetation to be removed in the Road Listing.

2. Unless otherwise included in the SUPPLEMENTAL SPECIFICATIONS or DESIGNATED ON THE GROUND:

   a. Commence work at the edge of the traveled way and proceed away from the road centerline.

   b. Roads without a defined traveled way: The starting point for cutting will be marked on the ground or defined in the SUPPLEMENTAL SPECIFICATIONS.

3. The points for establishing cutting limits are as follows:

a. Fill and daylighted (wide roadbed) section cutting commences at the edge of the traveled way and proceeds away from the road center line.

b. Drainage ditched section cutting commences at the bottom of the existing ditch and proceeds away from the road center line. Cutting on ditch foreslopes is not required.

c. Unditched cut section cutting commences at the intersection of the cutbank and the roadbed and proceeds away from center line.

4. Provide transitions between differing increments of cutting width. Accomplish transitions in a taper length of not less than 50 feet nor more than 70 feet.

C. Debris

1. Materials resulting from the cutting operation in excess of 12 inches in length or 3 inches in diameter is not allowed to remain on roadway slopes within the treated area, in ditches, or within water courses.

2. Remove limbs and chunks in excess of 3 inches in any dimension from the traveled way and shoulders.

3. Materials may be scattered down slope from the roadbed, outside of the work area and drainages unless otherwise listed in D. Invasive Species of Concern.

D. Invasive Species of Concern

Where DESIGNATED ON THE GROUND, included in the ROAD LISTING, SHOWN ON THE DRAWINGS or as ordered by the Contracting Officer invasive species of concern prevention practices shall be followed as listed below.

Invasive Species of Concern Prevention Practices
Avoidance

T-851 LOGGING OUT (5/07)

851.01 Description

This work consists of removal of fallen trees and snags which encroach into the roadway or the 3 feet of roadside abutting the roadway on the cut side.

851.02 Maintenance Requirements

A. Limb and remove timber which meets Utilization Standards, or deck at locations designated by the Contracting Officer.

B. Limb other material cut into lengths for handling. Deck outside ditches and drainages, off the traveled way and turnouts or at staked locations. The clearing width is to the edge of the roadway for public use roads, except limited use roads. The clearing width for limited use roads is shown in the specifications.

C. Do not leave woody debris and slash in excess of 12 inches in length or 3 inches in diameter, or concentrations which may plug ditches or culverts, in ditches, drainage channels, or on backslopes, traveled way, shoulders, or turnouts.

T-854 – TREATMENT AND DISPOSAL OF DANGER TREES (04/10)

854.01 Description

This work consists of felling and disposal of designated live or dead danger trees sufficiently tall to reach roads used by the Purchaser. Any removal of logs is subject to prior agreement between the Contractor Officer and the Purchaser.

854.02 Requirements

A. Designation of danger trees.

Danger trees to be felled will be designated in advance by the Contracting Officer. Trees to be removed will be Marked.

B. Falling, bucking and treatment for disposal.

Use controlled felling to ensure the direction of fall and prevent damage to property, structures, roadway, residual trees, and traffic. Stump heights, measured on the side adjacent to the highest ground, must not exceed 12 inches or 1/3 of the stump diameter, whichever is greater. Higher stump heights are permitted when necessary for safety.

Felled snags and trees, which are not Marked for removal, will be left in a stable condition such that they will not roll or slide. Position logs away from standing trees so they will not roll, are not on top of one another, and are located out of roadway and drainage structures.

Fell, limb and, remove trees, which are Marked for removal, that equal or exceed the utilization standards as listed in the Timber Sale contract or SUPPLEMENTATAL SPECIFICATIONS. Dispose of merchantable timber designated for removal in accordance with CT.3.2 Construction Clearing, of the Timber Sale Contract, or as described in SUPPLEMENTAL SPECIFICATIONS.

C. Slash treatment.

Within the roadway, remove limbs, chunks, and debris in excess of 12 inches in length and 3 inches in diameter, and concentrations that may plug ditches or culverts, and water courses.

Dispose of slash by scattering outside the roadway limits without damaging trees, or improvements.

Large accumulations of slash may be ordered hauled under T-832.

T-891 WATER SUPPLY AND WATERING (5/07)

891.01 Description

This work consists of providing facilities to furnish an adequate water supply, hauling and applying water.

891.02 Materials

If the Purchaser elects to provide water from other than designated sources, the Purchaser is responsible to obtain the right to use the water, including any cost for royalties involved.
Suitable and adequate water sources available for Purchaser's use under this contract are designated as follows:

Map Key No.	Location Road	Location Milepost	Use Restrictions

Little Summit Creek Pumper Chance at bridge, junction roads 4254/4270 T.14S., R.23E., Sec. 23, SW ¼

Morgan Well, Road 4276-010, T.14S., R.24E., Sec. 29, SE 1/4
NOTE: Site will require a generator and wiring connection.

891.03 Equipment

A. Positive control of water application is required. Equipment shall provide uniform application of water without ponding or washing.

B. An air gap or positive anti-siphon device shall be provided between the water source and the vehicle being loaded if the vehicle has been used for other than water haul, if the source is a domestic potable water supply, or the water is used for tank mixing with any other materials.

C. The designated water sources may require some work prior to their use. Such work may include cleaning ponded areas, installing temporary weirs or sandbags, pipe repair, pump installation, or other items appropriate to the Purchaser's operations. Flowing streams may be temporarily sandbagged or a weir placed to pond water, provided a minimum flow of __1____ cu. ft/sec is maintained. Obtain approval from the Contracting Officer on improvements for sandbags or weirs prior to placement.

SPECIAL PROJECT SPECIFICATION (6/03)
T-891-01F
WATER SUPPLY AND WATERING

891.03 Equipment

C. Delete the word "Contractor" in the second sentence and substitute the following: Purchaser.

D. Add the following: Watering, juvenile fish protection. All draft hoses being used to withdraw water from any live flowing stream or pond located at various locations in Region Six, the Purchaser shall utilize (1) one of the following methods of screening on any draft hoses used. These roads are listed in KT-FT.3.1# Road Maintenance Requirements.

(1) Perforated Plate: Screen openings shall not exceed 3/32 or 0.0938-inches (2.38 mm).

(2) Profile Bar Screen: The narrowest dimension in the screen openings shall not exceed 0.0689-inches (1.75-mm).

(3) Woven Wire Screen: Screen openings shall not exceed 3/32 or 0.0938-inches (2.38 mm).

All screening methods shall be cleaned frequently either with wire brushing, flushing, or any other acceptable method.