UNITED STATES DEPARTMENT OF AGRICULTURE
FOREST SERVICE
PACIFIC SOUTHWEST REGION FIVE

KLAMATH NATIONAL FOREST

COLD SPRINGS SALVAGE SPECIFIED ROAD PACKAGE

HAPPY CAMP RANGER DISTRICT

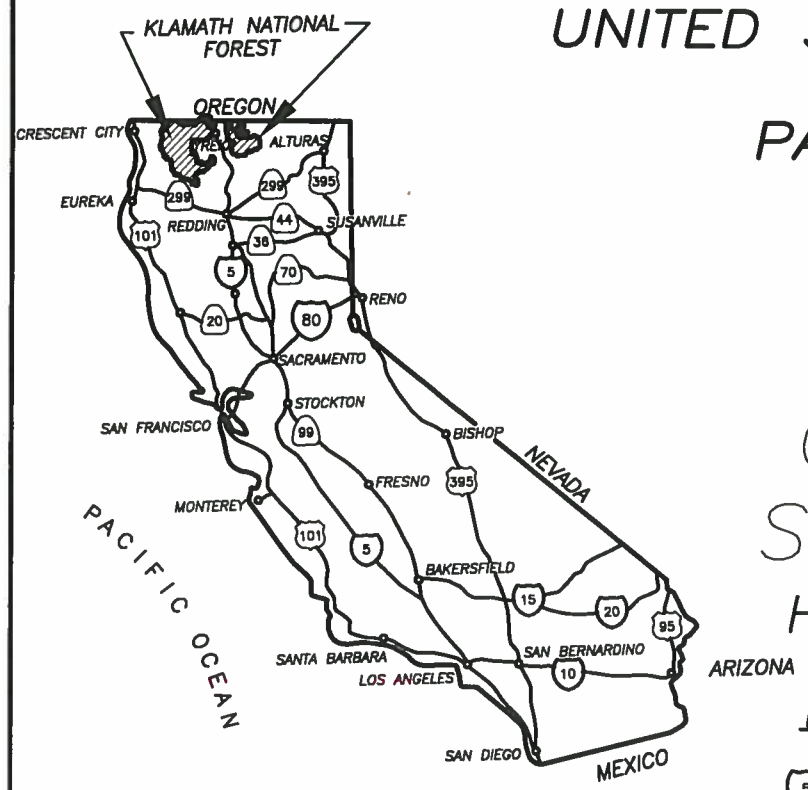

STATE OF CALIFORNIA

INDEX MAP

LEGEND

- (5) INTERSTATE HIGHWAY
- (97) U.S. HIGHWAY
- (96) STATE HIGHWAY
- (93) PRIMARY FOREST ROUTE
- (1C 01) COUNTY ROAD

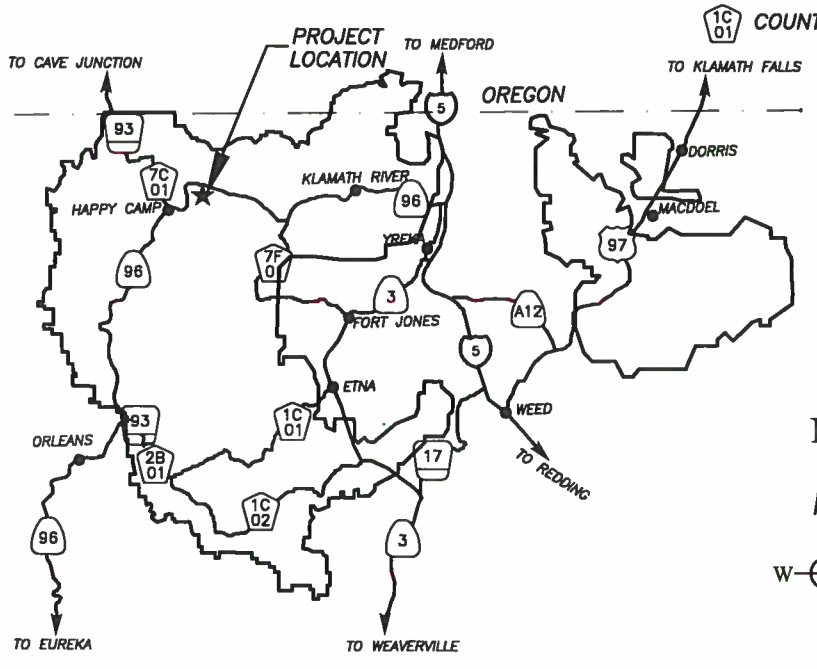

KLAMATH NATIONAL FOREST

★ PROJECT LOCATION

N
W E

LOCALITY MAP

NO SCALE

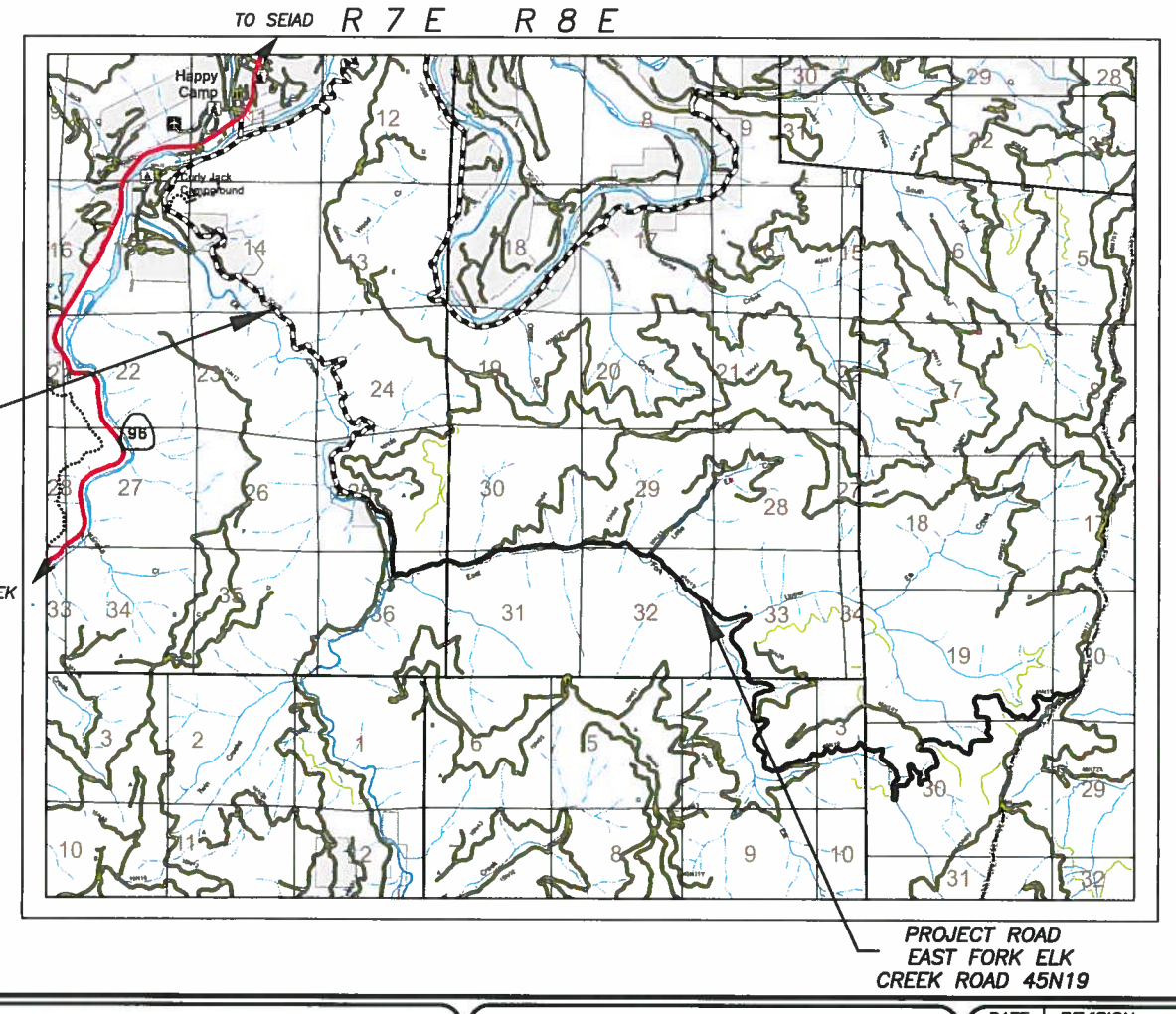

INDEX TO SHEETS

1	TITLE SHEET
1	LOCATION MAP
2	SUMMARY OF EST. QUANTITIES
3	STRAIGHTLINE PLAN 45N19
4	CULVERT INSTALLATION DETAILS
5	ENERGY DISSIPATER DETAILS

PREPARED BY: _____ PROJECT ENGINEER — DATE 7/11/2016

REVIEWED BY: _____ TIMBER MANAGEMENT OFFICER — DATE 7/11/2016

APPROVED BY: _____ FOREST ENGINEER — DATE 7/11/2016

APPROVED BY: _____ FOREST SUPERVISOR — DATE 7/13/2016

U.S. DEPARTMENT OF AGRICULTURE
FOREST SERVICE
KLAMATH NATIONAL FOREST
YREKA, CALIFORNIA

COLD SPRINGS SALVAGE SPECIFIED ROAD PACKAGE

TITLE PAGE

DESIGNED:	K. BIGELOW	DATE:	7/16
DRAWN:	K. BIGELOW	DATE:	7/16
CHECKED:	K. KELLOGG	DATE:	7/16

DATE	REVISION	BY

DRAWING NAME

SHEET 1

ITEM NO	DESCRIPTION	METHOD OF MEASURE -MENT	PAY UNIT	ROAD NO. & TOTALS						
				45N19						
151(01)	MOBILIZATION	LSQ	LS	ALL						
157(14)	SOIL EROSION & POLLUTION CONTROL	LSQ	LS	ALL						
207(01)	GEOTEXTILE, TYPE II-B, W/OUT GRAVEL CUSHION, FUNCTION J, NON-WOVEN NEEDLE, PUNCHED	DQ	SY	140						
251(01)	MACHINE PLACED RIPRAP, CLASS III	DQ	CY	20						
303(04)	ROADBED RECONDITIONING, REPAIR ROAD WAY, REPAIR DIPS, GRADE ROAD	DQ	MILE	5.15						
301(11)	AGGREGATE, TYPE 1-1/2"-MINUS SURFACE COURSE, COMMERCIAL SOURCE, GRADING (C), COMPACTION (C)	DQ	CY	60						
602(09)	CORRUGATED METAL ELBOW FOR 18"Ø CMP	AQ	EA	1						
602(11)	18" DIA CORRUGATED METAL PIPE, 0.079-IN THICKNESS FOR 14 GAUGE GALVANIZED STEEL, METHOD A	AQ	LF	40						
607(08)	CLEAN/MAINTAIN CULVERTS IN PLACE	AQ	EA	2						

U.S. DEPARTMENT OF AGRICULTURE
FOREST SERVICE
KLAMATH NATIONAL FOREST
YREKA, CALIFORNIA

COLD SPRINGS SALVAGE
SPECIFIED ROAD PACKAGE

SUMMARY OF ESTIMATED QUANTITIES

DESIGNED: K. BIGELOW DATE: 7/16
DRAWN: K. BIGELOW DATE: 7/16
CHECKED: K. KELLOGG DATE: 7/16

DATE	REVISION	BY

DRAWING NAME

SHEET 2

COLD SPRINGS SALVAGE
STRAIGHT LINE PLAN
45N19

FS 15N02

MP 5.50 REF JCT FS 15N02 RT

MP 5.48 REF CMP W/ OPEN HOLE IN ROADWAY & ELBOW SECTION. REMOVE EXISTING CMP & ELBOW, INSTALL NEW 18"Ø X 40' CMP & ELBOW. INSTALL ENERGY DISSIPATER @ OUTLET. COVER SURFACE WITH 1-1/2" MINUS SURFACE AGGREGATE AS NEEDED TO PROTECT TOP OF CULVERT

FS 16N28

MP 5.00 REF JCT FS 16N28 LT
BEGIN ROAD RECONSTRUCTION

FS 16N41

45N19

MP 2.72 REF JCT FS 16N41 LT

FS 15N09

MP 2.18 REF JCT FS 15N09 LT

FS 16N04

MP 1.33 REF JCT FS 16N04 LT

FS 16N39

MP 0.20 REF JCT FS 16N39 LT

MP 0.00 REF JCT CTY ROAD 7C001

CTY ROAD 7C001

FS 46N77

MP 10.15 PROJECT LIMIT
REF JCT FS 46N77
END ROAD RECONSTRUCTION

MP 9.29 REF CMP. CLEAN OUT CMP & CATCH BASIN

FS 45N56Y

MP 7.95 REF JCT FS 45N56Y LT

45N19

MP 7.58 REF CMP. CLEAN OUT CMP & CATCH BASIN

MP 7.57 INSTALL 6" COMPACTED SURFACE AGGREGATE OVER GEOTEXTILE FABRIC FOR 50'. MAINTAIN ROLLING DIP SHAPE IN ROAD TO ENSURE PROPER DRAINAGE. INSTALL ENERGY DISSIPATER AT OUTLET. GRADING AND COMPACTING SHALL BE INCIDENTAL TO ROCKING

U.S. DEPARTMENT OF AGRICULTURE
FOREST SERVICE
KLAMATH NATIONAL FOREST
YREKA, CALIFORNIA

COLD SPRINGS SALVAGE
SPECIFIED ROAD PACKAGE

STRAIGHTLINE PLAN 46N85Y &
RECONSTRUCTION DETAILS

DESIGNED:	K. BIGELOW	DATE:	7/16
DRAWN:	K. BIGELOW	DATE:	7/16
CHECKED:	K. KELLOGG	DATE:	7/16

DATE	REVISION	BY

DRAWING NAME

SHEET 3

TYPICAL BEDDING AND EXCAVATION DETAILS

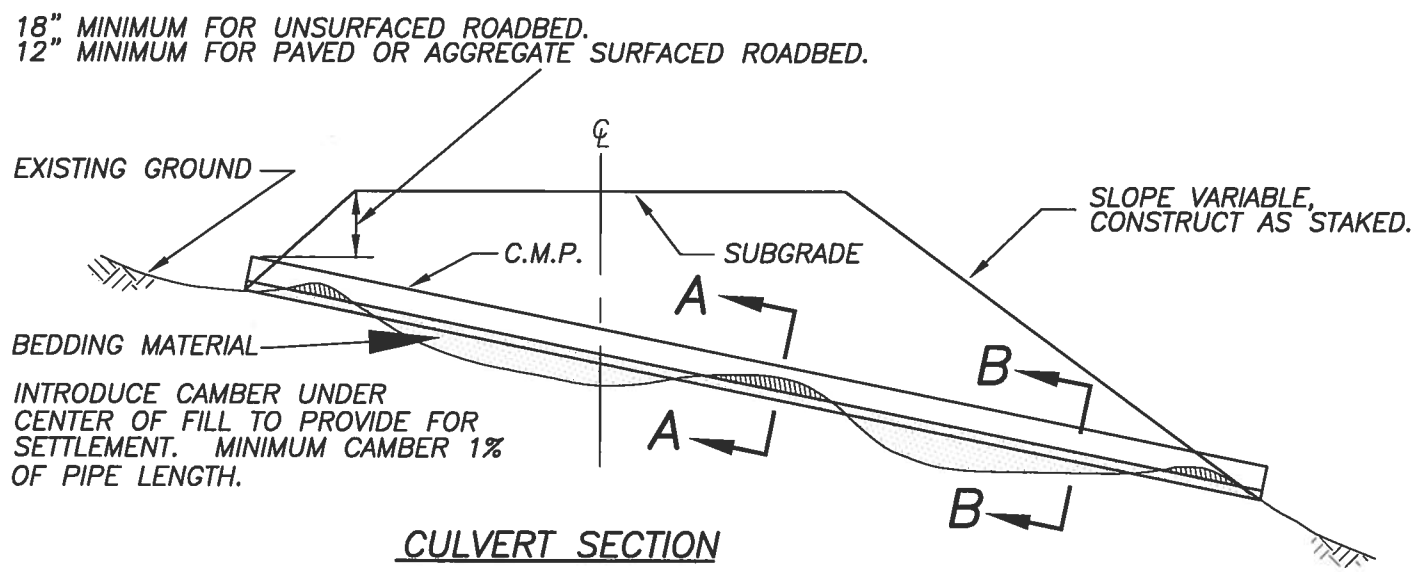

CULVERT SECTION

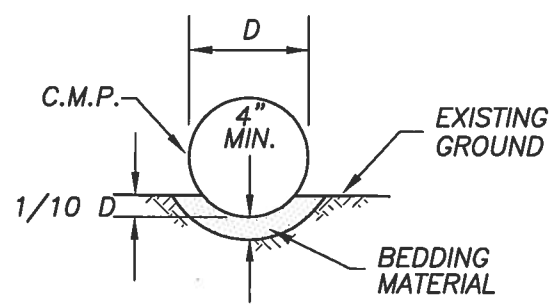

SECTION A–A

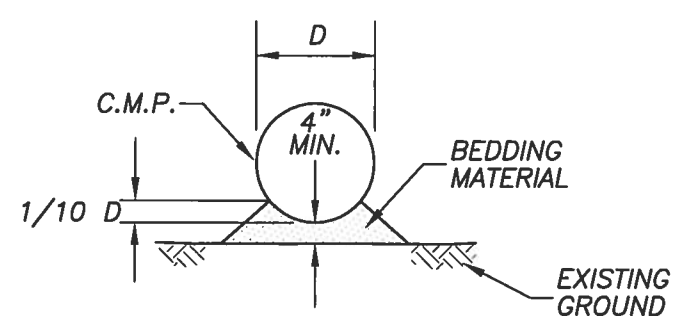

SECTION B–B

EARTH CATCH BASIN DETAILS

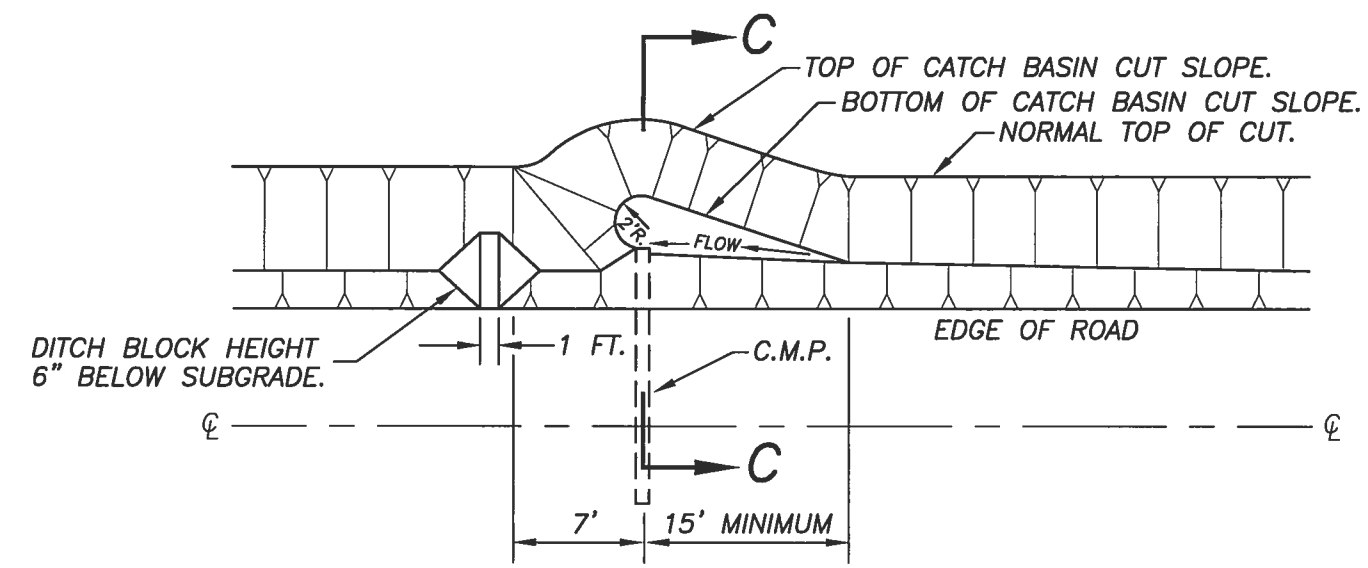

PLAN

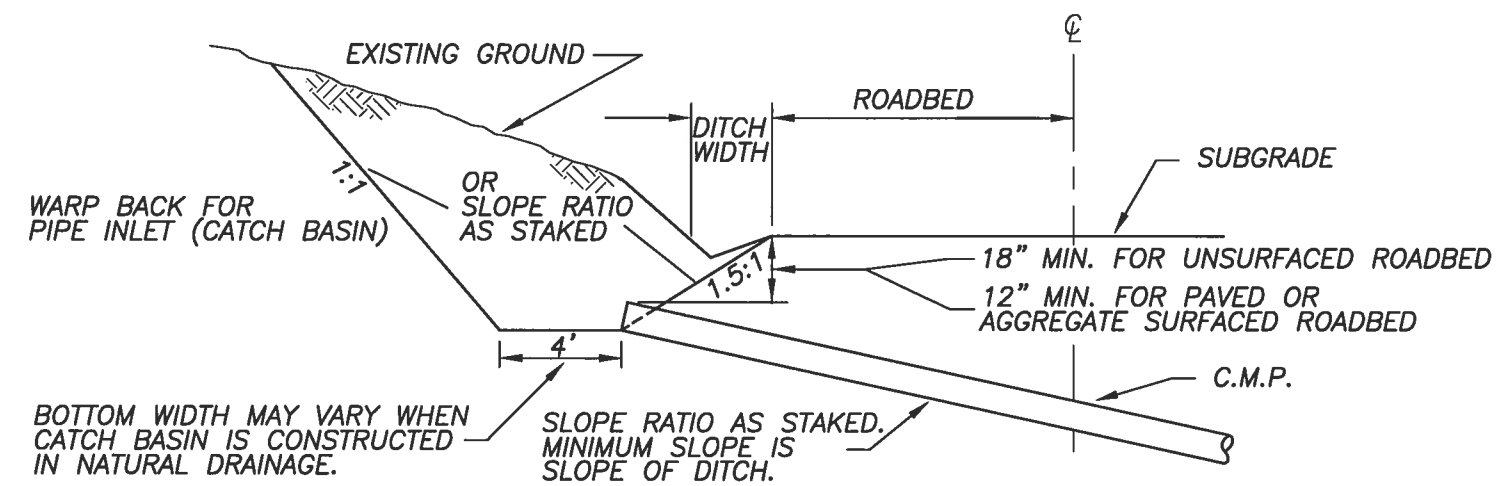

SECTION C–C

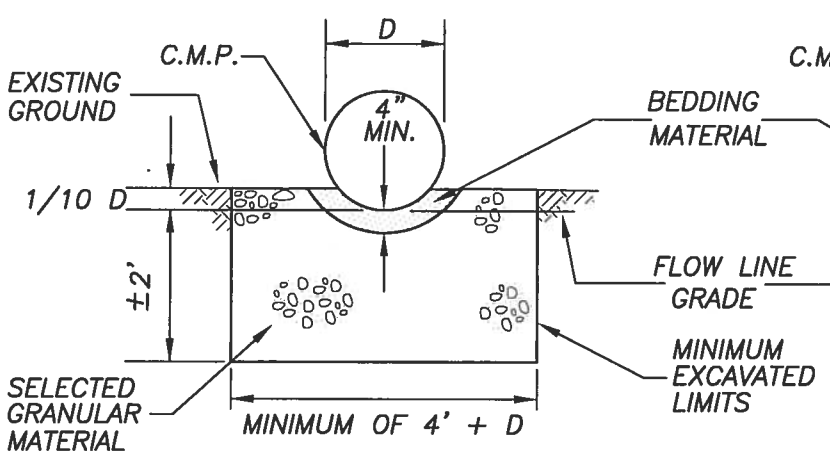

UNSUITABLE FOUNDATION

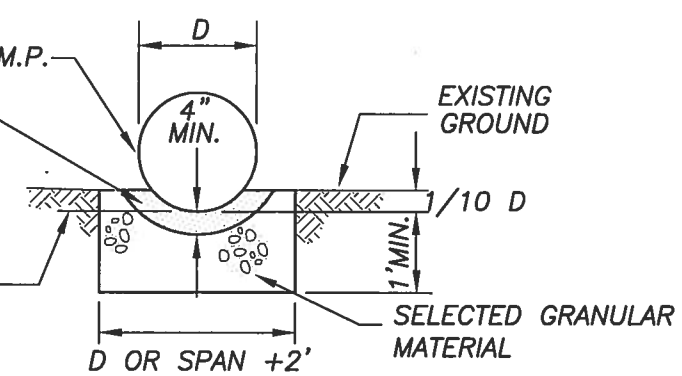

ROCK FOUNDATION

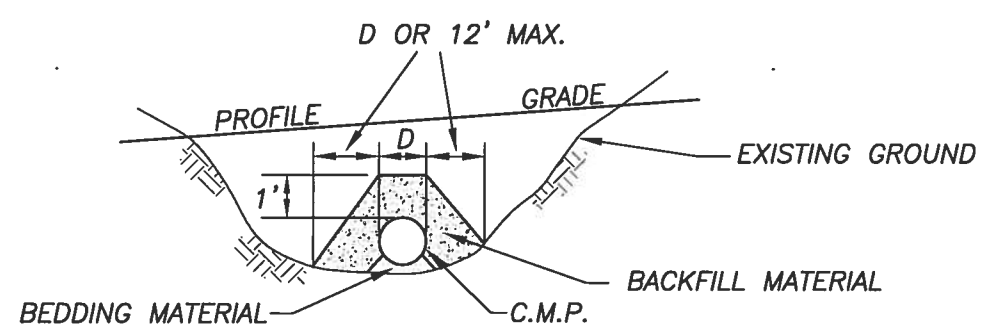

METHOD OF BACKFILLING PIPE

U.S. DEPARTMENT OF AGRICULTURE FOREST SERVICE KLAMATH NATIONAL FOREST YREKA, CALIFORNIA	COLD SPRINGS SALVAGE SPECIFIED ROAD PACKAGE	CULVERT INSTALLATION TYPICAL DETAILS	DESIGNED: K. BIGELOW DATE: 7/16 DRAWN: K. BIGELOW DATE: 7/16 CHECKED: K. KELLOGG DATE: 7/16	DATE / REVISION / BY	DRAWING NAME SHEET 4

NOTES:

1. RIPRAP SHALL BE PLACED IN ACCORDANCE WITH SECTION 251.
2. ROCK USED FOR RIPRAP SHALL CONFORM TO THE REQUIREMENTS OF SPECIFICATION 251 AND AS SHOWN ON THE CHART ON THIS SHEET AND IN TABLE 705-1

RIPRAP CLASS & PLACEMENT DIMENSIONS							
PIPE SIZE	RIPRAP CLASS	B	C	D	QUANTITY C.Y.	QUANTITY TON	DESCRIPTION
*	1-2	2'	3'	1'	0.2	0.3	ENERGY DISSIPATER
18"-24"	2	5'	7'	1.5'	2.0	3.0	ENERGY DISSIPATER
30"	2-3	5'	7'	1.5'	2.0	3.0	ENERGY DISSIPATER
36"	2-3	6'	9'	2.0'	4.0	6.0	ENERGY DISSIPATER
36"	3	SEE BELOW			5.0	7.5	SLOPE PROTECTION
48"	3	6'	9'	2.0'	4.0	6.0	ENERGY DISSIPATER
48"	4	SEE BELOW			6.0	9.0	SLOPE PROTECTION
CMPA 64"x43"	4	7'	10'	2.5'	6.5	9.8	ENERGY DISSIPATER
CMPA 64"x43"	4	SEE BELOW			7.0	10.5	SLOPE PROTECTION
CMPA 73"x55"	4	8'	10'	2.5'	7.4	11.1	ENERGY DISSIPATER
CMPA 73"x55"	4	SEE BELOW			8.0	12.0	SLOPE PROTECTION
DIP	2-3	10'	5'	1.0'	1.9	2.9	ENERGY DISSIPATER
*	6" CMP, 12" METAL SPILLWAYS AND LEAD-OFF DITCH OUTLETS.						

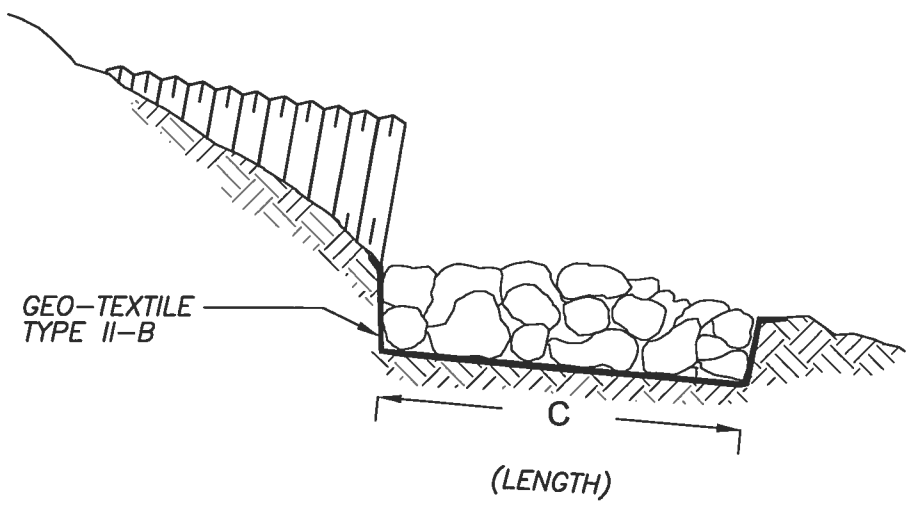

CROSS SECTION VIEW

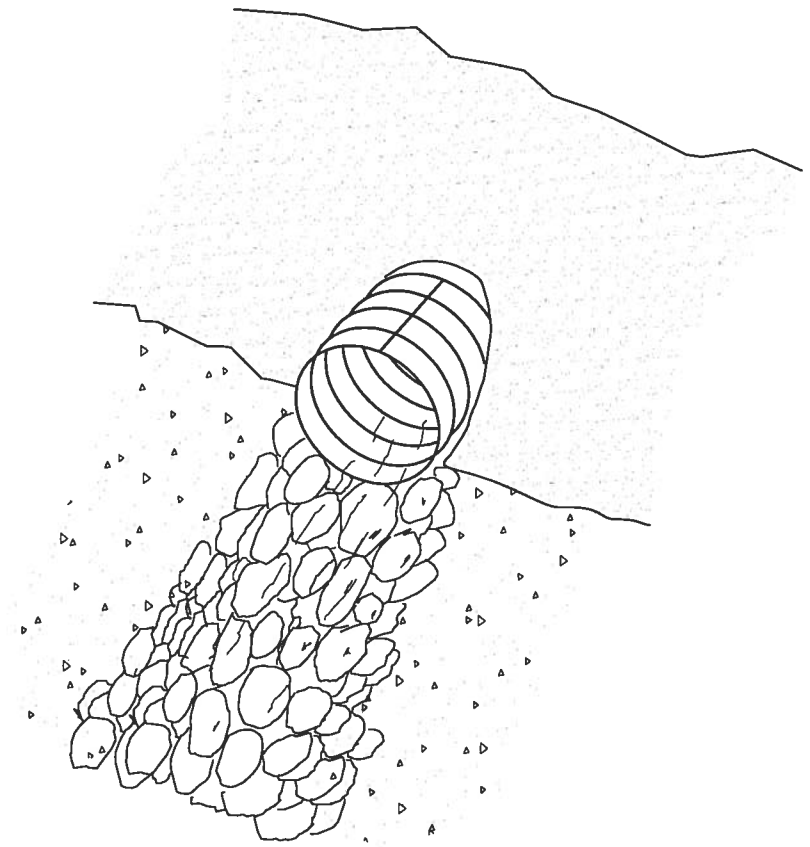

PERSPECTIVE VIEW

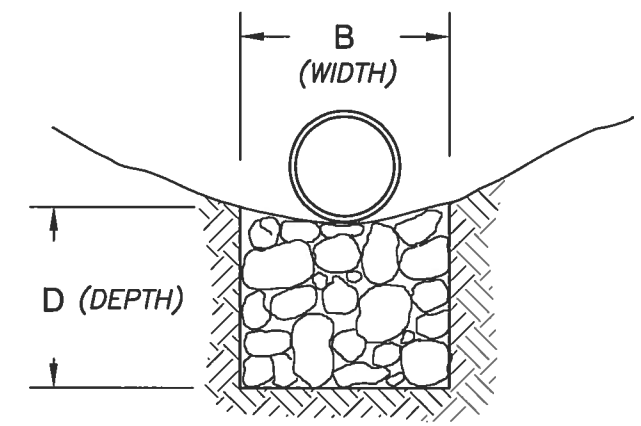

ELEVATION VIEW

OUTLET ENERGY DISSIPATER

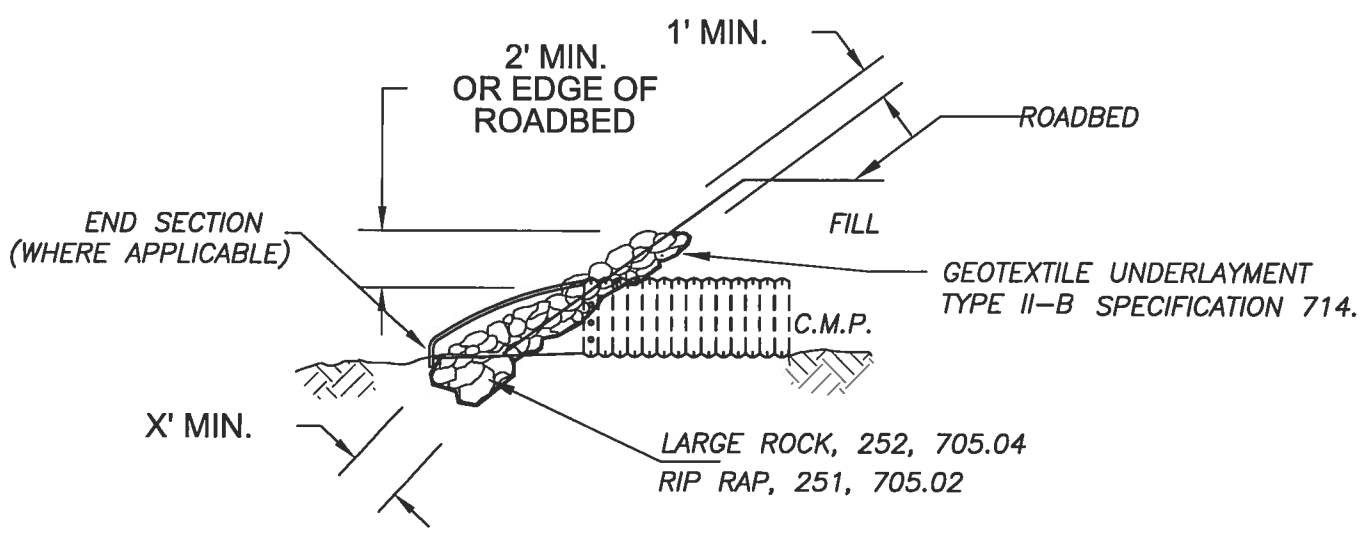

CROSS SECTION VIEW

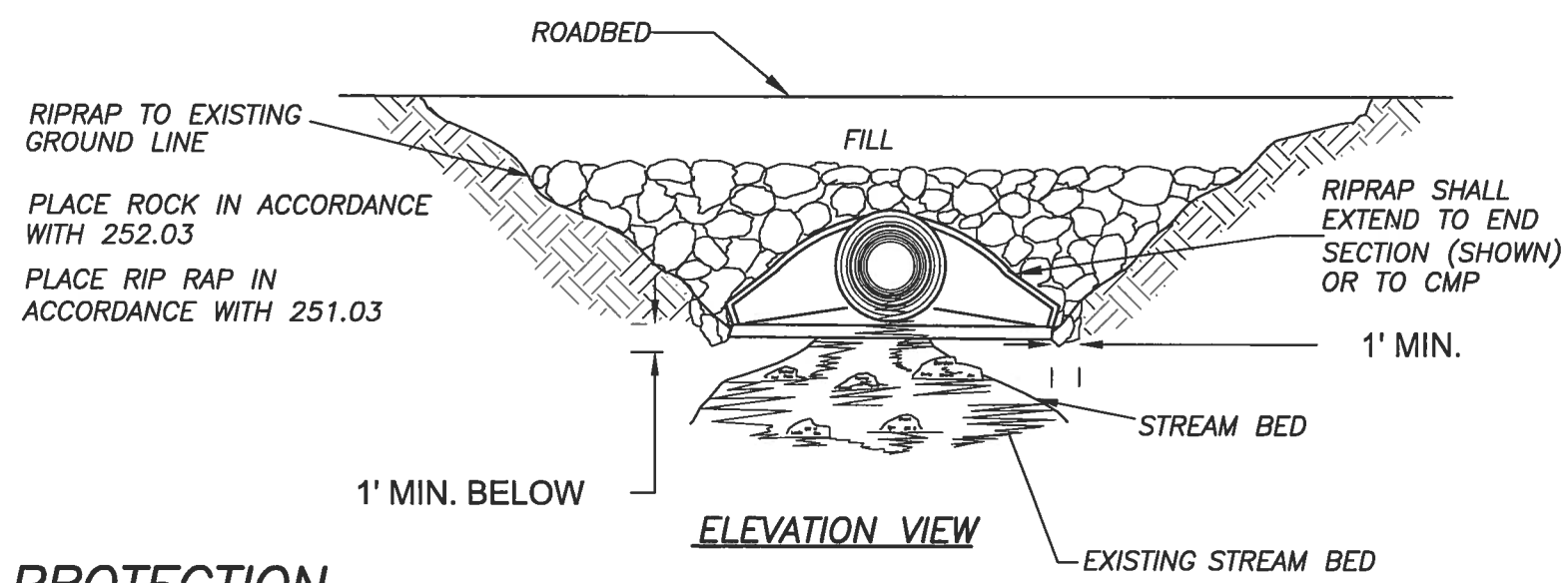

ELEVATION VIEW

FILL SLOPE PROTECTION

U.S. DEPARTMENT OF AGRICULTURE FOREST SERVICE KLAMATH NATIONAL FOREST YREKA, CALIFORNIA	COLD SPRINGS SALVAGE SPECIFIED ROAD PACKAGE	ENERGY DISSIPATER & FILL SLOPE PROTECTION DETAILS	DESIGNED: K. BIGELOW DATE: 7/16 DRAWN: K. BIGELOW DATE: 7/16 CHECKED: K. KELLOGG DATE: 7/16	DATE / REVISION / BY	DRAWING NAME SHEET 5