U.S. DEPARTMENT OF AGRICULTURE
FOREST SERVICE REGION 8
SUMTER NATIONAL FOREST
ANDREW PICKENS DISTRICT

BELMONT
IRTC

FSR 726 – CEDAR CREEK RIFLE RNG – 0.72 MILE
FSR 744 – RICH MNT – 0.67 MILES
FSR 744E – RICH MOUNTAIN E – 0.86 MILE
FSR 2288 – CAMP CREEK – 0.6 MILE

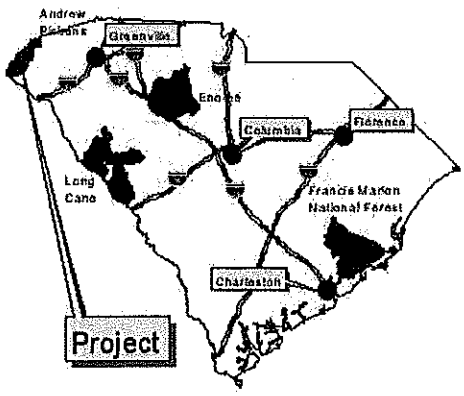

Jacques L. Bryant 06/24/2016
Forest Engineer Date

Robert Tuft 7/14/16
District Ranger Date

Tony L. White 07/27/2016
Planning, Engineering, and Recreation Staff Officer Date

for J. Anderson July 27, 2016
Forest Supervisor Date

ESTIMATE OF QUANTITIES

				ROAD NUMBER	726	744	744E	2288	-	-	
				MILE POST (MILES)	0.72	0.67	0.86	0.6	-	-	
ITEM NO.	DESCRIPTION	METHOD OF MEASURE	UNIT	REVISION DATE	QUANTITIES						REMARKS
24901	Composite Road Construction	CQ	Mile	2006			0.86	0.60			
30109	Aggregate surface course,Grading CR14,Compaction method A	CQ	Ton	2006	150.00	125.00					
30109	Aggregate surface course,Grading 3",Compaction method A	CQ	Ton	2006			200.00	200.00			
60201	18" Reinforced Concrete Pipe, Class 111	CQ	Foot	2006			32.00				
60201	24" Reinforced Concrete Pipe, Class 111	CQ	Foot	2006			64.00				
62501	Seeding and Mulching, Dry method	CQ	Acre	2006			2.00	1.00			
63301	Stop Sign System	CQ	EA	2006		1.00					

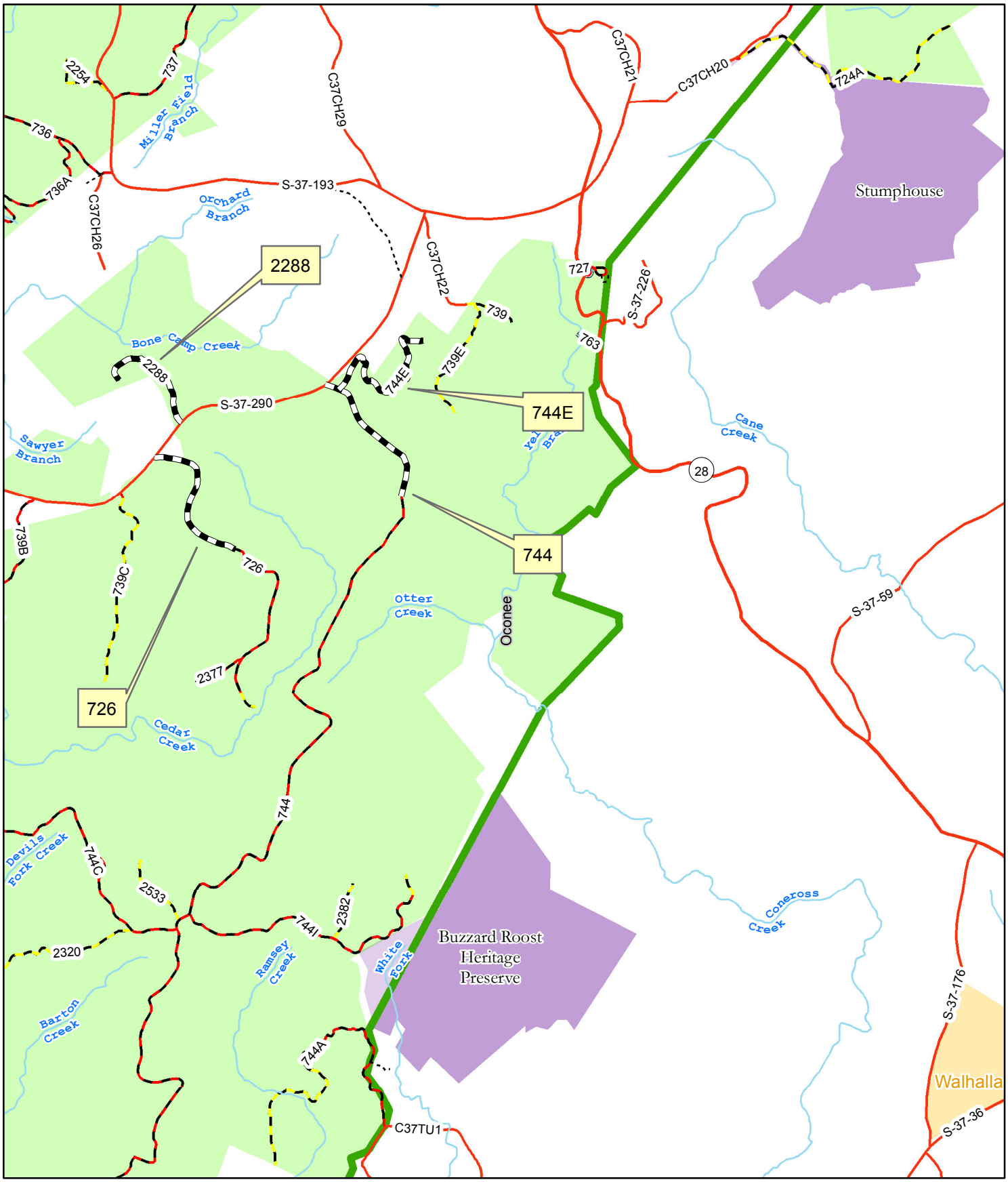

Legend

Project

ANDREW PICKENS DISTRICT BELMONT IRTC

0 0.5 1 1.5 Miles

N W E S

Andrew Pickens District
Belmont IRTC

FSR 726
CEDAR CREEK RIFLE RANGE

MILES	**CONSTRUCTION NOTES**
0.00	INTERSECTIONS WITH S-37-290 "CASSIDY BRIDGE RD"
0.00 – 0.720	PLACE 150 TONS OF AGGREGATE, GRADE, **"OCONEE CRUSHER RUN 1 ½"** LOOSE THROUGHOUT, END OF UNIT
0.72	END OF PROJECT

FSR 744
RICH MNT

MILES	**CONSTRUCTION NOTES**
0.00	INTERSECTIONS WITH S-37-290 "CASSIDY BRIDGE RD"
0.00 – 0.67	PLACE 125 TONS OF AGGREGATE, GRADE, **"OCONEE CRUSHER RUN 1 ½"** LOOSE THROUGHOUT, END OF UNIT
0.01	INSTALL STOP SIGN LEFT
0.67	END OF PROJECT

FSR 744E
RICH MOUNTAIN E

STATION	**CONSTRUCTION NOTES**
0+00	INTERSECTIONS WITH 744
0+00 – 1+00	CONSTRUCT INTERSECTION SEE ENTRANCE DRAWING, - W=16, R=30, A=90, L=100’
	PLACE 20 TONS OF AGGREGATE, GRADE 3”, 4” LOOSE, THROUGHOUT
1+00	CONSTRUCT DIRT MOUND
1+00 – 45+25	CONSTRUCT OUT SLOPE RIGHT TYPICAL SECTION. PLACE 160 TONS OF AGGREGATE, GRADE 3”, 4” LOOSE, WHERE DIRECTED BY THE ENGINEER
	GRADE TO DRAIN THROUGHOUT
2+00	CONSTRUCT DIP DRAIN RIGHT
3+00	CONSTRUCT DIP DRAIN RIGHT
4+50	CONSTRUCT DIP DRAIN RIGHT
6+50	CONSTRUCT DIP DRAIN RIGHT
7+70	CONSTRUCT DIP DRAIN RIGHT
8+25	CONSTRUCT DIP DRAIN RIGHT
9+20	REMOVE EXISTING 18” RCP CONSTRUCT NATURAL DIP DRAIN RIGHT
10+00	CREST
11+50	CONSTRUCT NATURAL DIP DRAIN RIGHT

12+70	CONSTRUCT DIP DRAIN RIGHT
14+00	CONSTRUCT DIP DRAIN RIGHT
15+00	CONSTRUCT DIP DRAIN RIGHT
15+70 – 17+70	**CONSTRUCT CURVE WIDENING**
16+70	REMOVE EXISTING 18” X 20’ CMP INSTALL NEW 24” X 32’ RCP
	BORROW MATERIAL SHALL BE OBTAIN FROM THE LEFT APPROACH BANKS
	APPROXIMATE 10CY EXCAVATION
18+00	CREST
19+00	CONSTRUCT NATURAL DIP DRAIN RIGHT
19+75	CREST
20+50	CONSTRUCT DIP DRAIN RIGHT
20+40	CONSTRUCT DIP DRAIN RIGHT
21+50 – 22+50	**CONSTRUCT CURVE WIDENING**
22+00	CONSTRUCT DIP DRAIN RIGHT
23+50	CONSTRUCT DIP DRAIN RIGHT
25+00	CONSTRUCT DIP DRAIN RIGHT
26+00	CONSTRUCT DIP DRAIN RIGHT

26+20 – 28+20	**CONSTRUCT CURVE WIDENING**
27+20	REMOVE EXISTING 18” X 20’ CMP INSTALL NEW 18” X 32’ RCP
	BORROW MATERIAL SHALL BE OBTAINED FROM THE LEFT APPROACH BANKS
	APPROXIMATE 10CY EXCAVATION
28+20 – 30+00	**CONSTRUCT CURVE WIDENING**
30+00	CONSTRUCT DIP DRAIN RIGHT
31+30	CONSTRUCT DIP DRAIN RIGHT
33+30	CONSTRUCT DIP DRAIN RIGHT
35+50	CREST
35+00	CONSTRUCT DIP DRAIN RIGHT
36+30	CONSTRUCT NATURAL DIP DRAIN RIGHT
37+00	CREST
38+00	CONSTRUCT DIP DRAIN RIGHT
39+00	CONSTRUCT DIP DRAIN RIGHT
39+00 – 41+00	**CONSTRUCT CURVE WIDENING**
40+00	REMOVE EXISTING 18” X 20’ CMP INSTALL NEW 24” X 32’ RCP
	BORROW MATERIAL SHALL BE OBTAINED FROM THE LEFT APPROACH BANKS
	APPROXIMATE 10CY EXCAVATION
41+00	CONSTRUCT DIP DRAIN RIGHT
42+00	CREST

42+60	CONSTRUCT NATURAL DIP DRAIN RIGHT
44+00	CONSTRUCT DIP DRAIN RIGHT
44+25	BEGIN TRANSITION TURN AROUND PLACE 20 TONS OF AGGREGATE, GRADE 3”, 4” LOOSE,
44+50	OBTAIN FULL T.A. 75’ X 75’
45+25	END OF PROJECT AND T.A.

- SEEDING AND MULCHING
    - USE THE SAME MIX USED FOR LANDINGS/TEMP ROAD

FSR 2288
CAMP CREEK

STATION	**CONSTRUCTION NOTES**
0+00	INTERSECTIONS WITH S-37-290 “CASSIDY BRIDGE RD”
0+00 – 30+50	RECONSTRUCTION REQUIRED PLACE 200 TONS OF AGGREGATE, GRADE 3”, 4” LOOSE, THROUGHOUT MAINTAIN EXISTING OUT SLOPE TYPICAL SECTION GRADE TO DRAIN THROUGHOUT
3+50	RECONSTRUCT DIP LEFT
5+00	RECONSTRUCT DIP LEFT
8+50	RECONSTRUCT DIP LEFT
9+50	RECONSTRUCT DIP LEFT
10+80	RECONSTRUCT DIP LEFT
12+00	RECONSTRUCT DIP LEFT
14+50	RECONSTRUCT DIP LEFT
16+00	RECONSTRUCT DIP LEFT
17+60	RECONSTRUCT DIP LEFT
19+20	EXISTING CULVERT
20+20	RECONSTRUCT DIP RIGHT
21+80	RECONSTRUCT DIP RIGHT
24+00	RECONSTRUCT NATURAL DIP
25+00	RECONSTRUCT DIP RIGHT

26+00	RECONSTRUCT DIP RIGHT
27+20	RECONSTRUCT DIP RIGHT
28+50	RECONSTRUCT DIP RIGHT
29+30	CREST
30+50	END OF PROJECT CONSTRUCT A T-INTERSECTION TURN AROUND

- SEEDING AND MULCHING
    - USE THE SAME MIX USED FOR LANDINGS/TEMP ROAD

CROWN SECTION

N.T.S.

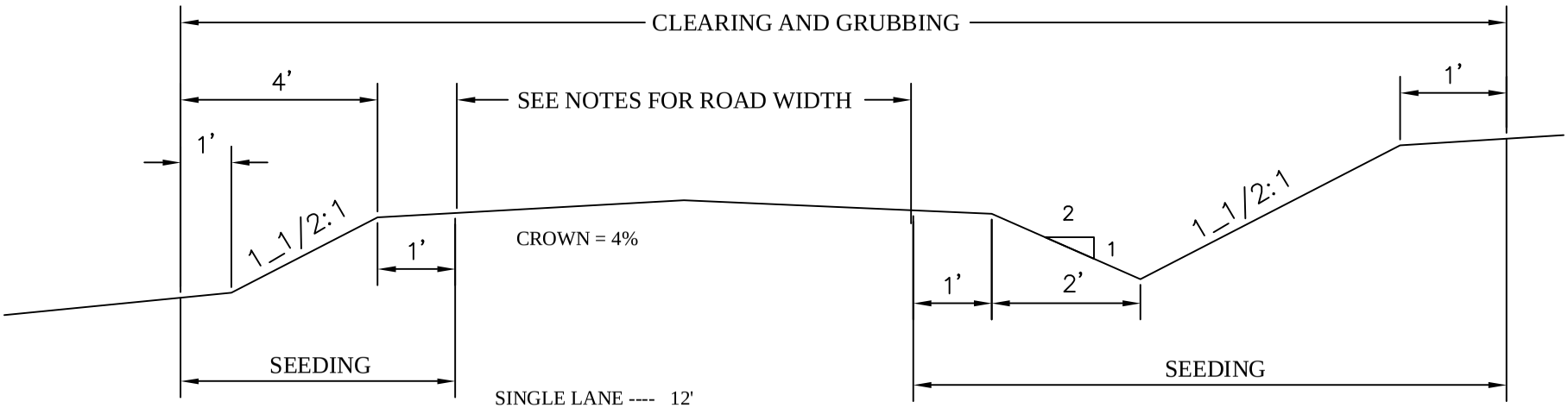

SINGLE LANE ---- 12'
DOUBLE TRACK ----- 20'
CURVE WIDENING ---- AS SHOWN ON THE DRAWING

NOTE: MOTOR GRADER FINISH IS REQUIRED.

SURFACING SHALL BE TRUCK SPREAD TO A THICKNESS OF _____" LOOSE DEPTH THE CONTRACTOR SHALL PREPARE THE SUB GRADE, SHAPE AND FINAL GRADE THE SURFACING TO THE CONFORM TO THE TYPICAL SECTION. THE CONTRACTOR SHALL LIMIT CHANNELING TO THE TYPICAL SECTION. THE CONTRACTOR SHALL LIMIT CHANNELING TO THE AMOUNT OF SURFACING THAT CAN BE DONE IN THAT DAY. SURFACE SHALL BE PLACED IN A SINGLE LAYER THICKNESS UNLESS APPROVED BY THE ENGINEER. AT THE END OF THE EACH WORKING DAY THE CONTRACTOR SHALL SPREAD AND SHAPE ALL SURFACING HAULED THAT DAY. THERE WILL BE NO EXCEPTIONS UNLESS APPROVED IN WRITING BY THE ENGINEER.

SURFACING SECTION

NOT TO SCALE

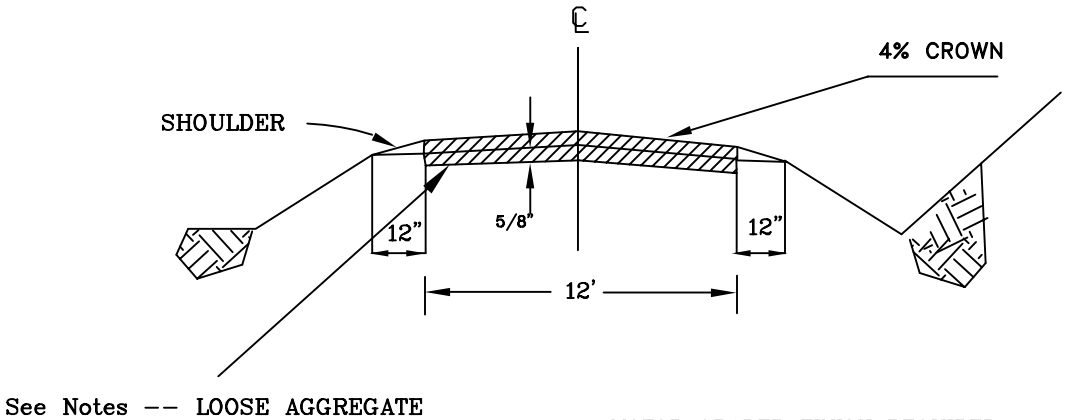

SURFACING GRADATION:

SUMTER -- GRADING No. 3"

SIEVE DESIG.	% BY WEIGHT PASSING
3"	100
1 1/2"	90 – 100
1"	20 – 55
3/4	0 – 15
3/8	0 – 5

LEAD-OFF DITCH

NOT TO SCALE

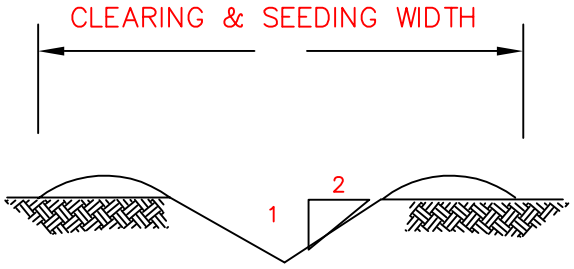

TYPICAL SECTION

NOT TO SCALE

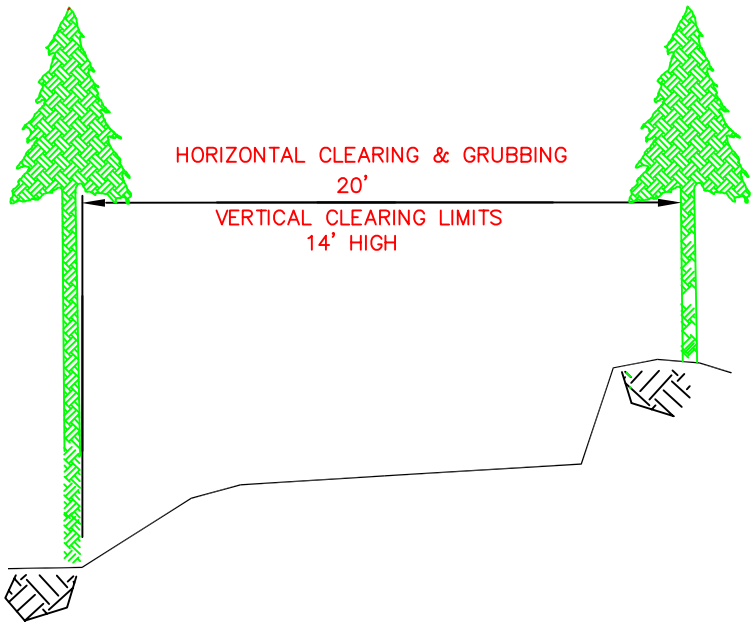

SURFACING SHALL BE TRUCK SPREAD TO A THICKNESS "AS SHOWN ON THE DRAWING" THE CONTRACTOR SHALL PREPARE THE SUB GRADE, SHAPE AND FINAL GRADE THE SURFACING TO THE CONFORM TO THE TYPICAL SECTION. THE CONTRACTOR SHALL LIMIT CHANNELING TO THE TYPICAL SECTION. THE CONTRACTOR SHALL LIMIT CHANNELING TO THE AMOUNT OF SURFACING THAT CAN BE DONE IN THAT DAY. SURFACE SHALL BE PLACED IN A SINGLE LAYER THICKNESS UNLESS APPROVED BY THE ENGINEER. AT THE END OF THE EACH WORKING DAY THE CONTRACTOR SHALL SPREAD AND SHAPE ALL SURFACING HAULED THAT DAY. THERE WILL BE NO EXCEPTIONS UNLESS APPROVED IN WRITING BY THE ENGINEER.

SURFACING SECTION

NOT TO SCALE

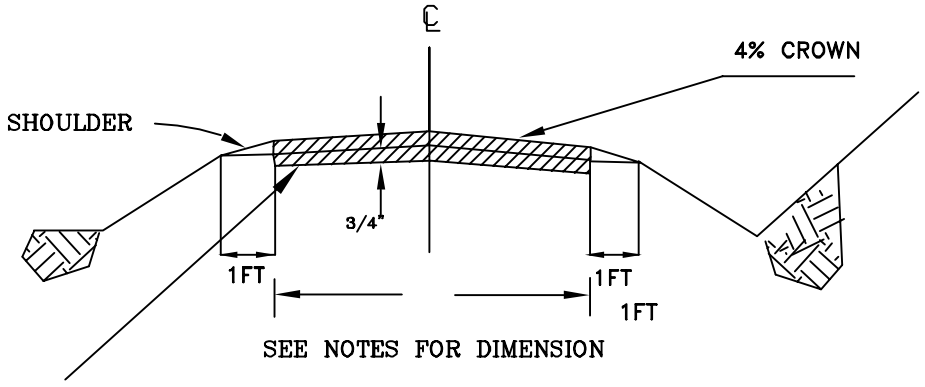

MOTOR GRADER FINISH REQUIRED.

CULVERT SECTION

NOT TO SCALE

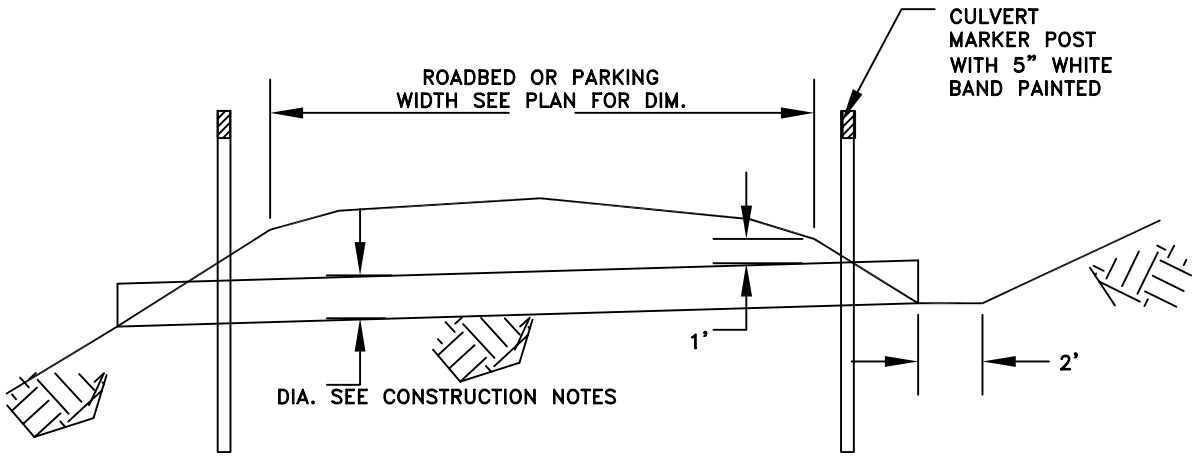

GENERAL NOTES:

1. CAMBER IN PIPE TO BE AS STAKED BY THE ENGINEER
2. POST MARKER SHALL BE INCIDENTAL TO THE PAYITEM 602
3. POST MARKER SHALL BE 3" MIN TREATED WOOD POST WITH A 5" WHITE BAND PAINTED ARROUND TOP.
4. POST MARKER SHALL BE LOCATED ON EACH SIDE OF ROAD VISIBLE TO ON COMING TRAFFIC.

DIP TYPICAL

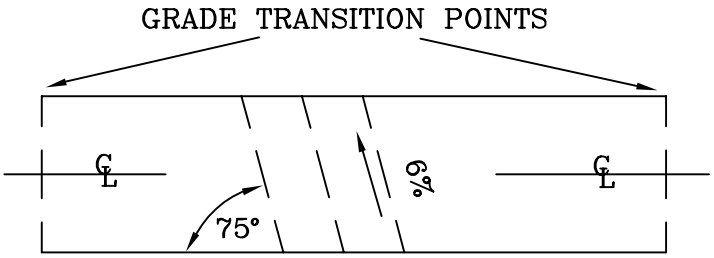

DIP
PLAN VIEW

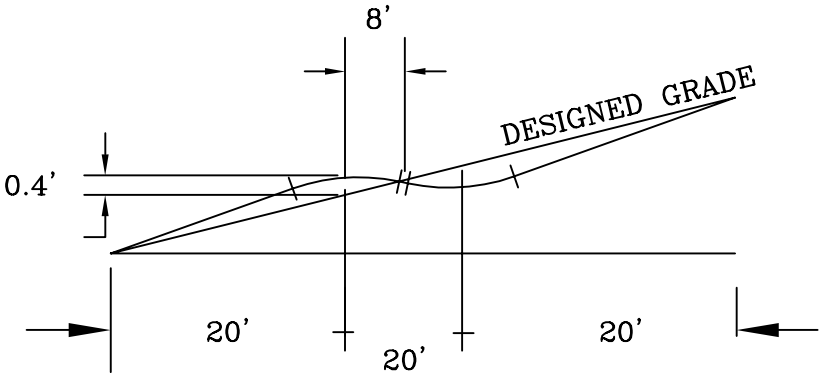

DIP
PROFILE VIEW

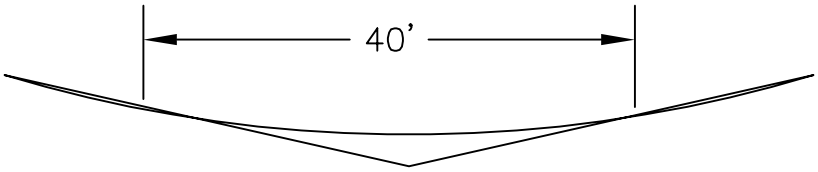

NATURAL DIP
PROFILE VIEW

OF

ENTRANCE TYPICAL SECTION

NOT TO SCALE

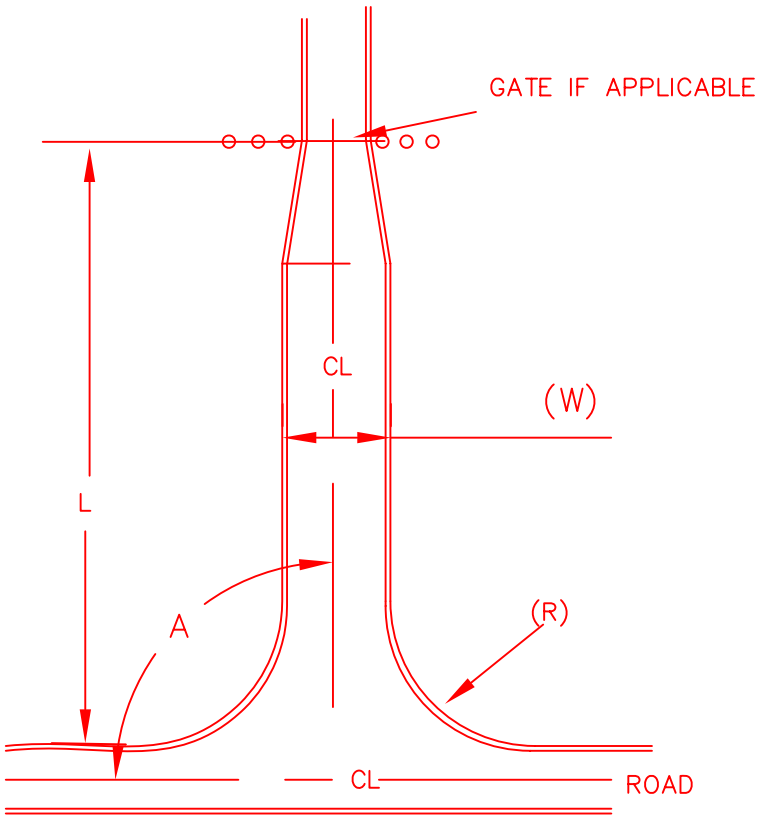

OUTSLOPE TYPICAL

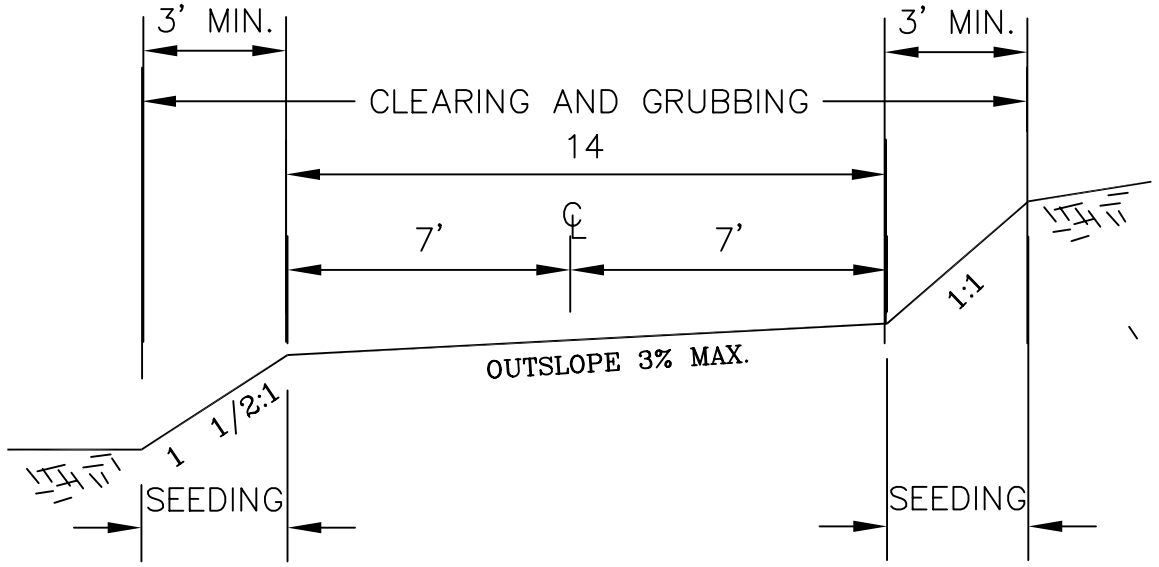

SURFACING SECTION

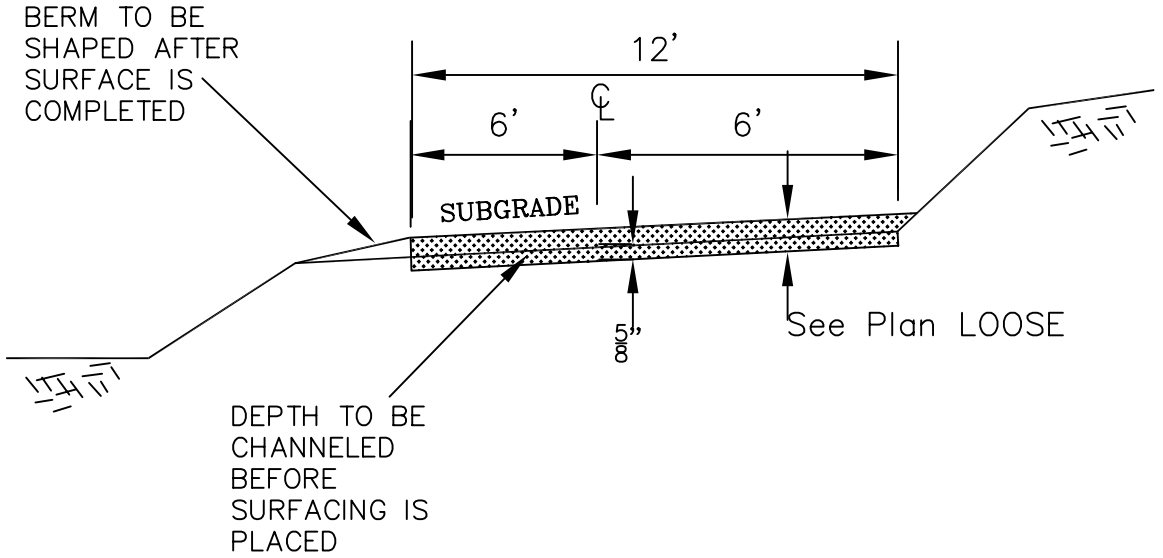

SURFACING SHALL BE TRUCK SPREAD TO A THICKNESS OF See Notes LOOSE DEPTH THE CONTRACTOR SHALL PREPARE THE SUB GRADE, SHAPE AND FINAL GRADE THE SURFACING TO THE CONFORM TO THE TYPICAL SECTION. THE CONTRACTOR SHALL LIMIT CHANNELING TO THE TYPICAL SECTION. THE CONTRACTOR SHALL LIMIT CHANNELING TO THE AMOUNT OF SURFACING THAT CAN BE DONE IN THAT DAY. SURFACE SHALL BE PLACED IN A SINGLE LAYER THICKNESS UNLESS APPROVED BY THE ENGINEER. AT THE END OF THE EACH WORKING DAY THE CONTRACTOR SHALL SPREAD AND SHAPE ALL SURFACING HAULED THAT DAY. THERE WILL BE NO EXCEPTIONS UNLESS APPROVED IN WRITING BY THE ENGINEER.

SURFACING GRADATION:

SUMTER -- GRADING No. 3"

SIEVE DESIG.	% BY WEIGHT PASSING
3"	100
1 1/2"	90 – 100
1"	20 – 55
3/4	0 – 15
3/8	0 – 5

STOP SIGN DETAIL

SIGN AND POST SHALL BE FURNISHED AND INSTALLED BY THE CONTRACTOR.
SIGN SHALL BE FASTENED TO POST WITH 3/8" DIAMETER GALVANIZED CARRIAGE BOLTS – 2 PER SIGN.

PLACE SIGN AS NEAR AS POSSIBLE TO THE SPOT WHERE VEHICLE IS TO STOP. NEVER MORE THAN 50 FEET FROM INTERSECTION.

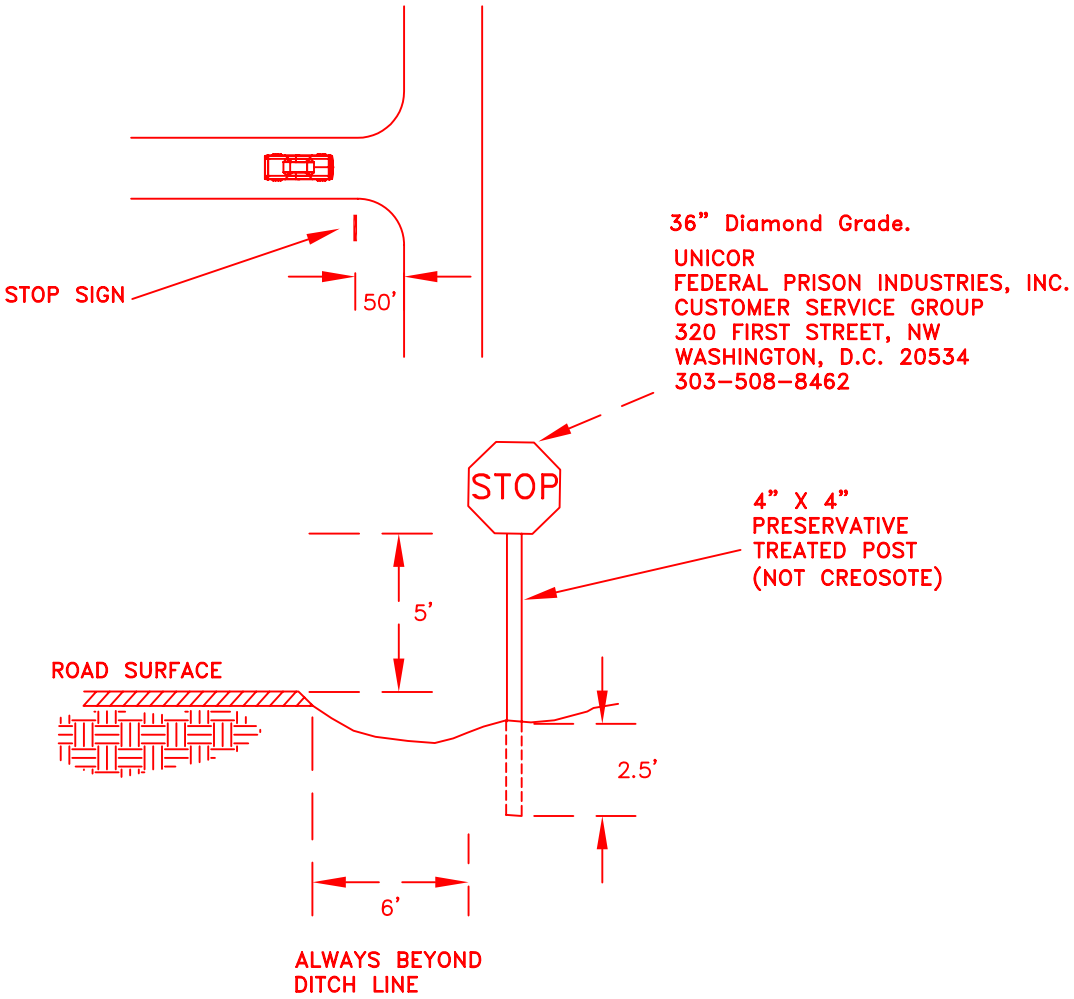

CURVE WIDENING

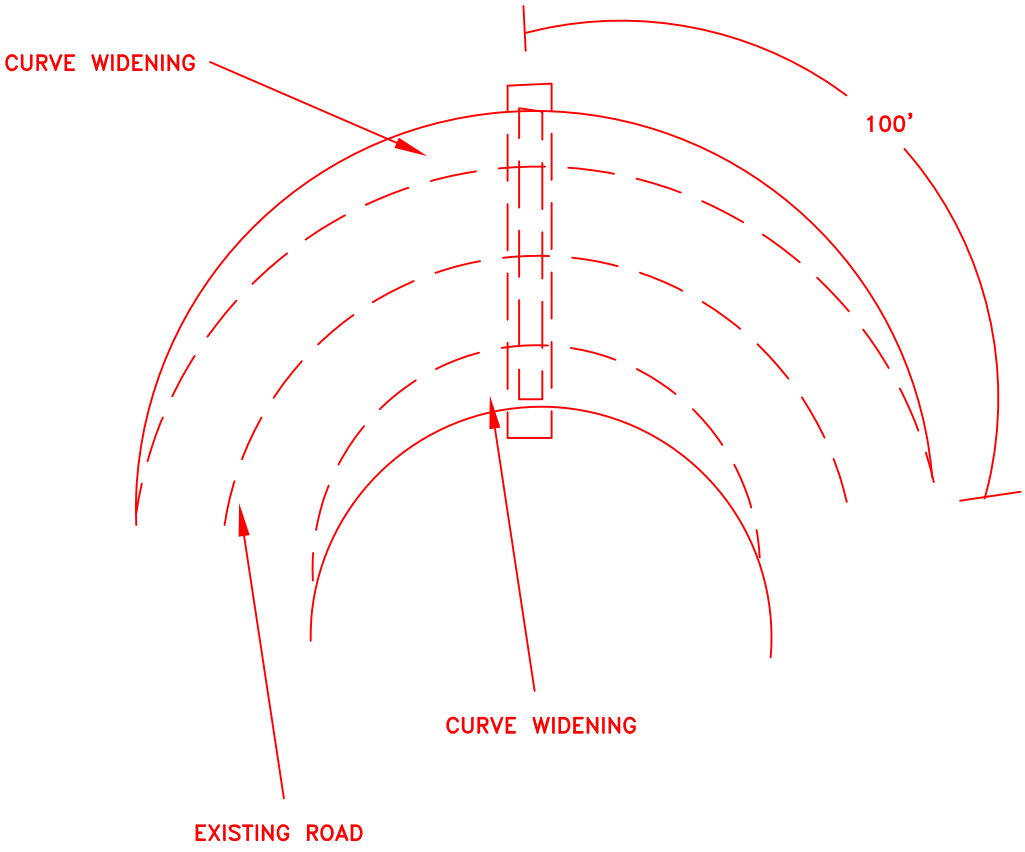

Macadam Base Course	
Sieve Designation	**Percentage by Weight Passing**
2-inch	100
1½-inch	95 – 100
1-inch	70 – 100
½-inch	48 – 75
No. 4	30 – 60
No. 30	11 – 30
No. 200*	0 – 12
Liquid Limit	25 Max.
Plasticity Index	6 Max.

*AASHTO T 11 is used to determine the amount passing the No. 200 sieve.

Marine Limestone Base Course	
Sieve Designation	**Percentage by Weight Passing**
2- inch	100
1½-inch	95 – 100
1-inch	70 – 100
½-inch	50 – 85
No. 4	30 – 60
No. 30	17 – 38
No. 200*	0 – 20
Liquid Limit	25 Max.
Plasticity Index	6 Max.

*AASHTO T 11 is used to determine the amount passing the No. 200 sieve.

FS SUPPLEMENTS SPECIFICATION FP03

AP Belmont IRTC

Table of Contents

Table of Contents 1
Preface 3
101 - Terms, Format, and Definitions 3
101.01 Meaning of Terms 3
101.01 Meaning of Terms 3
101.03 Abbreviations. 3
101.04 Definitions 4
101.04 Definitions 7
102 - Bid, Award, and Execution of Contract 8
102 Bid, Award, and Execution of Contract 8
103 - Scope of Work 8
Deletions 8
104 - Control of Work 8
Deletions 8
104.06 Use of Roads by Contractor 8
105 - Control of Material 9
105.02 Material Sources. 9
105.02(a) Government-provided sources 9
105.05 Use of Material Found in the Work. 9
106 - Acceptance of Work 9
106.07 Delete 9
107 - Legal Relations and Responsibility to the Public 10
107.05 Responsibility for Damage Claims. 10
107.06 Contractor’s Responsibility for Work. 10
107.08 Sanitation, Health, and Safety 10

107.09 Legal Relationship of the Parties. 10
107.10 Environmental Protection. 10
108 - Prosecution and Progress 11
108 Delete. 11
109 - Measurement and Payment 12
109 Deletions 12
109.02 Measurement Terms and Definitions. 12
151 - Mobilization 13
155 - Schedules for Construction Contracts 13
155 Delete. 13
204 - Excavation and Embankment 13
204.11 Compaction. 26
249 - Composite Road Construction 27
301 - Untreated Aggregate Courses 31
301 Title Change. 32
301.05 Compacting 32
602 - Culverts and Drains 33
602.03 General. 33
625 - Turf Establishment 33
625.05 Watering. 33
625.07 Seeding. (a) Dry method. 33
625.07 Seeding. (b) Hydraulic method. 33
Table 625-1. Fertilizer Application Rate. 33
633 - Permanent Traffic Control 34
633.03 General. 34
718 - Traffic Signing and Marking Material 34
718.05 Aluminum Panels 34

Preface

Preface_wo_03_15_2004_m

Delete all but the first paragraph and add the following:

The Forest Service, US Department of Agriculture has adopted FP-03 for construction of National Forest System Roads.

101 - Terms, Format, and Definitions

101.00_nat_us_07_25_2005

101.01_nat_us_01_22_2009

101.01 Meaning of Terms

Delete all references to the TAR (Transportation Acquisition Regulations) in the specifications.

101.01_nat_us_01_22_2009

101.01 Meaning of Terms

Delete all references to the FAR (Federal Acquisition Regulations) in the specifications.

101.03_nat_us_06_16_2006

101.03 Abbreviations.

Add the following to (a) Acronyms:

AFPA	American Forest and Paper Association
MSHA	Mine Safety and Health Administration
NIST	National Institute of Standards and Technology
NESC	National Electrical Safety Code
WCLIB	West Coast Lumber Inspection Bureau

.

Add the following to (b) SI symbols:

mp	Milepost
ppm	Part Per Million

101.04_nat_us_03_29_2007

101.04 Definitions.

Delete the following definitions and substitute the following:

Bid Schedule--The Schedule of Items.

Bridge--No definition.

Contractor--The individual or legal entity contracting with the Government for performance of prescribed work. In a timber sale contract, the contractor is the "purchaser".

Culvert--No definition.

Right-of-Way--A general term denoting (1) the privilege to pass over land in some particular line (including easement, lease, permit, or license to occupy, use, or traverse public or private lands), or (2) Real property necessary for the project, including roadway, buffer areas, access, and drainage areas.

Add the following:

Adjustment in Contract Price--"Equitable adjustment," as used in the Federal Acquisition Regulations, or "construction cost adjustment," as used in the Timber Sale Contract, as applicable.

Change--"Change" means "change order" as used in the Federal Acquisition Regulations, or "design change" as used in the Timber Sale Contract.

Design Quantity--"Design quantity" is a Forest Service method of measurement from the FS-96 *Forest Service Specifications for the Construction of Roads and Bridges.* Under these FP specifications this term is replaced by the term "Contract Quantities".

Forest Service--The United States of America, acting through the Forest Service, U.S. Department of Agriculture.

Neat Line--A line defining the proposed or specified limits of an excavation or structure.

Pioneer Road--Temporary construction access built along the route of the project.

Purchaser--The individual, partnership, joint venture, or corporation contracting with the Government under the terms of a Timber Sale Contract and acting independently or through agents, employees, or subcontractors.

Protected Streamcourse--A drainage shown on the plans or timber sale area map that requires designated mitigation measures.

Road Order--An order affecting and controlling traffic on roads under Forest Service jurisdiction. Road Orders are issued by a designated Forest Officer under the authorities of 36 CFR, part 260.

Schedule of Items--A schedule in the contract that contains a listing and description of construction items, quantities, units of measure, unit price, and amount.

Utilization Standards--The minimum size and percent soundness of trees described in the specifications to determine merchantable timber.

Add Figure 101-1—Illustration of road structure terms:

Figure 101-1—Illustration of road structure terms.

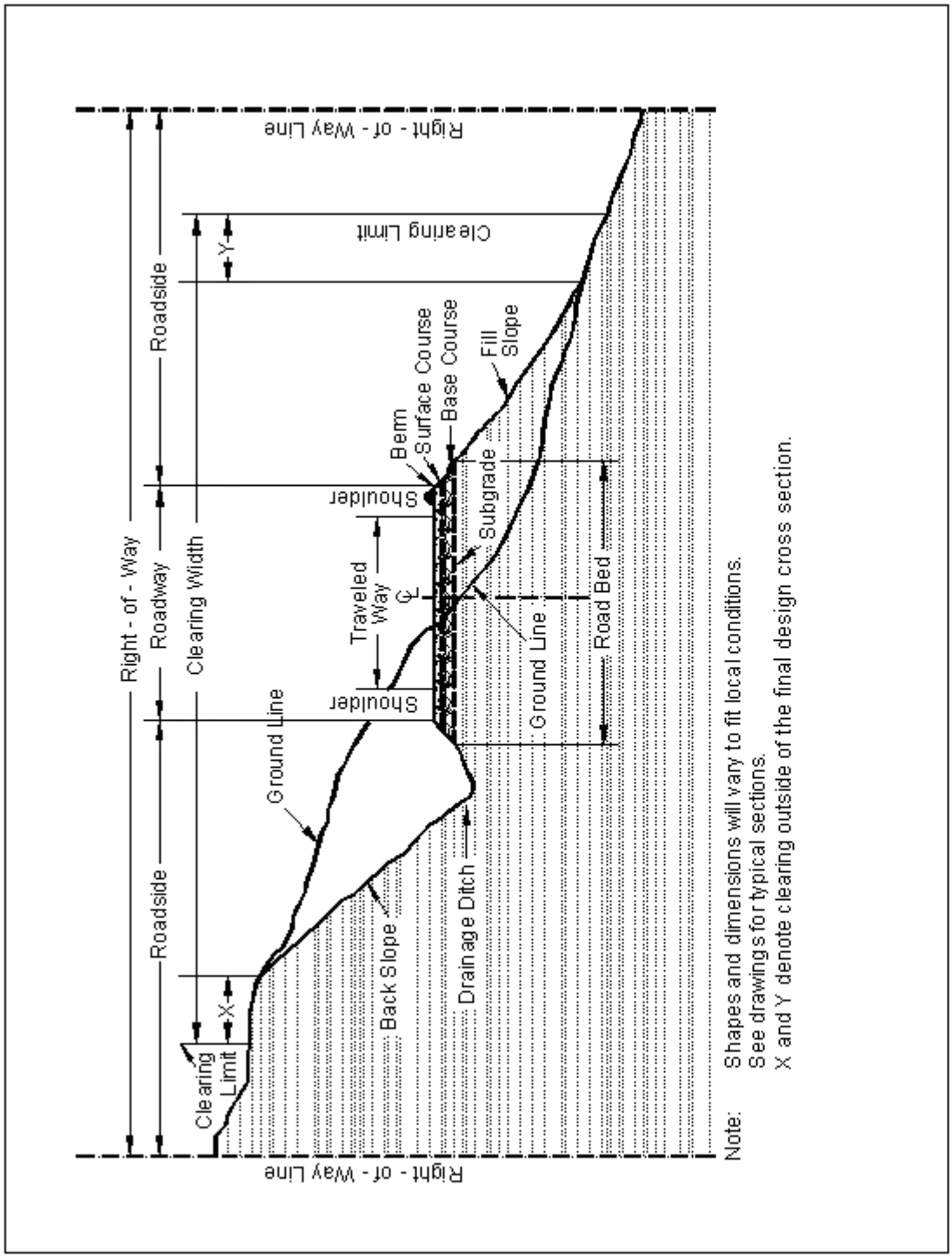

101.04 Definitions.

Delete the following definitions:

Contract Modification

Day

Notice to Proceed

Solicitation

102 - Bid, Award, and Execution of Contract

102.00_nat_us_02_16_2005

102 Bid, Award, and Execution of Contract

Delete Section 102 in its entirety.

103 - Scope of Work

103.00_nat_us_02_16_2005

Deletions

Delete all but subsection 103.01 Intent of Contract.

104 - Control of Work

104.00_nat_us_06_16_2006

Deletions

Delete Sections 104.01, 104.02, and 104.04.

104.06_nat_us_02_17_2005

Add the following subsection:

104.06 Use of Roads by Contractor

The Contractor is authorized to use roads under the jurisdiction of the Forest Service for all activities necessary to complete this contract, subject to the limitations and authorizations designated in the Road Order(s) or described in the contract, when such use will not damage the roads or national forest resources, and when traffic can be accommodated safely.

105 - Control of Material

105.02_nat_us_01_18_2007

105.02 Material Sources.

105.02(a) Government-provided sources.

Add the following:

Comply with the requirements of 30 CFR 56, subparts B and H. Use all suitable material for aggregate regardless of size unless otherwise designated. When required, re-establish vegetation in disturbed areas according to section 625.

105.05_nat_us_05_12_2004

105.05 Use of Material Found in the Work.

Delete 105.05 (a) and (b) and the last sentence of the second paragraph and substitute the following:

Materials produced or processed from Government lands in excess of the quantities required for performance of this contract are the property of the Government. The Government is not obligated to make reimbursement for the cost of producing these materials.

106 - Acceptance of Work

106.07_nat_us_05_11_2004

106.07 Delete

Delete subsection 106.07.

107 - Legal Relations and Responsibility to the Public

107.05_nat_us_05_11_2004

107.05 Responsibility for Damage Claims.

Delete the entire subsection.

107.06_nat_us_06_16_2006

107.06 Contractor's Responsibility for Work.

Delete the following from the first paragraph.

"except as provided in Subsection 106.07".

107.08_nat_us_03_29_2005

107.08 Sanitation, Health, and Safety

Delete the entire subsection.

107.09_nat_us_06_16_2006

107.09 Legal Relationship of the Parties.

Delete the entire subsection.

107.10_nat_us_06_16_2006

107.10 Environmental Protection.

Add the following:

Design and locate equipment repair shops, stationary refueling sites, or other facilities to minimize the potential and impacts of hazardous material spills on Government land.

Before beginning any work, submit a Hazardous Spill Plan. List actions to be taken in the event of a spill. Incorporate preventive measures to be taken, such as the location of mobile refueling facilities, storage and handling of hazardous materials, and similar information. Immediately notify the CO of all hazardous material spills. Provide a written narrative report form no later than 24 hours after the initial report and include the following:

- Description of the item spilled (including identity, quantity, manifest number, and other identifying information).
- Whether amount spilled is EPA or state reportable, and if so whether it was reported, and to whom.

- Exact time and location of spill including a description of the area involved.
- Containment procedures.
- Summary of any communications the Contractor had with news media, Federal, state and local regulatory agencies and officials, or Forest Service officials.
- Description of clean-up procedures employed or to be employed at the site including final disposition and disposal location of spill residue.

When available provide copies of all spill related clean up and closure documentation and correspondence from regulatory agencies.

The Contractor is solely responsible for all spills or leaks that occur during the performance of this contract. Clean up spills or leaks to the satisfaction of the CO and in a manner that complies with Federal, state, and local laws and regulations.

108 - Prosecution and Progress

108.00_nat_us_02_16_2005

108 Delete.

Delete Section 108 in its entirety.

109 - Measurement and Payment

109.00_nat_us_02_17_2005

109 Deletions

Delete the following entire subsections:

109.06 Pricing of Adjustments.

109.07 Eliminated Work.

109.08 Progress Payments.

109.09 Final Payment.

109.02_nat_us_06_16_2006

109.02 Measurement Terms and Definitions.

(b) Contract quantity.

Add the following:

Contract quantities will be adjusted only when there are errors in the original design of 15% or more.

Change the following:

"(b) Cubic yard" to "(c) Cubic yard".

Add the following definition:

(p) Thousand Board Feet (Mbf). 1,000 board feet based on nominal widths, thickness, and extreme usable length of each piece of lumber or timber actually incorporated in the job. For glued laminated timber, 1,000 board feet based on actual width, thickness, and length of each piece actually incorporated in the job.

151 - Mobilization

151.03_nat_us_08_05_2005

151.03 Payment

Delete the entire subsection and add the following:

151.03 Payment

Mobilization is considered an indirect cost of this contract and will not be compensated as a separate work item.

155 - Schedules for Construction Contracts

155.00_nat_us_05_11_2004

155 Delete.

Delete Section 155 in its entirety.

204 - Excavation and Embankment

204.00_nat_us_03_26_2009

Replace Section 204 in its entirety with the following:

Description

204.01 This work consists of excavating material and constructing embankments. This includes furnishing, hauling, stockpiling, placing, disposing, sloping, shaping, compacting, and finishing earthen and rocky material.

204.02 Definitions.

(a) Excavation. Excavation consists of the following:

(1) Roadway excavation. All material excavated from within the right-of-way or easement areas, except subexcavation covered in (2) below and structure excavation covered in Sections 208 and 209. Roadway excavation includes all material encountered regardless of its nature or characteristics.

(2) Subexcavation. Material excavated from below subgrade elevation in cut sections or from below the original groundline in embankment sections. Subexcavation does not include the work required by Subsections 204.05, 204.06(b), and 204.06(c).

(3) Borrow excavation. Material used for embankment construction that is obtained from outside the roadway prism. Borrow excavation includes unclassified borrow, select borrow, and select topping.

(b) Embankment construction. Embankment construction consists of placing and compacting roadway or borrow excavation. This work includes:

(1) Preparing foundation for embankment;
(2) Constructing roadway embankments;
(3) Benching for side-hill embankments;
(4) Constructing dikes, ramps, mounds, and berms; and
(5) Backfilling subexcavated areas, holes, pits, and other depressions.

(c) Conserved topsoil. Excavated material conserved from the roadway excavation and embankment foundation areas that is suitable for growth of grass, cover crops, or native vegetation.

(d) Waste. Excess and unsuitable roadway excavation and subexcavation that cannot be used.

Material

204.03 Conform to the following Subsections:

Backfill material	704.03
Select borrow	704.07
Select topping	704.08
Topping	704.05
Unclassified borrow	704.06
Water	725.01

Construction Requirements

204.04 Preparation for Roadway Excavation and Embankment Construction. Clear the area of vegetation and obstructions according to Sections 201 and 203.

204.05 Reserved.

204.06 Roadway Excavation. Excavate as follows:

(a) General. Do not disturb material and vegetation outside the construction limits. Incorporate only suitable material into embankments. Replace any shortage of suitable material caused by premature disposal of roadway excavation. Dispose of unsuitable or excess excavation material according to Subsection 204.14.

At the end of each day's operations, shape to drain and compact the work area to a uniform cross-section. Eliminate all ruts and low spots that could hold water.

Retrieve material deposited outside of the clearing limits as directed by the CO. Place unsuitable material in designated areas.

(b) Rock cuts. Blast rock according to Section 205. Excavate rock cuts to 6 inches below subgrade within the roadbed limits. Backfill to subgrade with topping or with other suitable material. Compact the material according to Subsection 204.11

(c) Earth cuts. Scarify earth cuts to 6 inches below subgrade within the roadbed limits. Compact the scarified material according to Subsection 204.11.

(d) Pioneer Roads. Road pioneering, slash disposal, and grubbing of stumps may proceed concurrently with excavation. Conduct excavation and placement operations so material to be treated under Section 201 will not be incorporated into the roadway unless specified in the slash treatment method. Maintain drainage during pioneering operations.

Remove snow and ice in advance of the work and deposit beyond the roadway limits in a manner that will not waste material or generate sediment. Do not incorporate snow and ice into embankments. Place snow or ice in a manner to prevent resource damage.

204.07 Subexcavation. Excavate material to the limits designated by the CO. Take cross-sections according to Section 152. Prevent unsuitable material from becoming mixed with the backfill. Dispose of unsuitable material according to Subsection 204.14. Backfill the subexcavation with topping, or other suitable material. Compact the material according to Subsection 204.11.

204.08 Borrow Excavation. Use all suitable roadway excavation in embankment construction. Do not use borrow excavation when it results in excess roadway excavation. Deduct excess borrow excavation from the appropriate borrow excavation quantity.

Obtain borrow source acceptance according to Subsection 105.02. Develop and restore borrow sources according to Subsection 105.03. Do not excavate beyond the established limits. When applicable, shape the borrow source to permit accurate measurements when excavation is complete.

204.09 Preparing Foundation for Embankment Construction. Prepare foundation for embankment construction as follows:

(a) Embankment less than 4 feet high over natural ground. When designated, remove topsoil and break up the ground surface to a minimum depth of 6 inches by plowing or scarifying. Compact the ground surface according to Subsection 204.11.

(b) Embankments over an existing asphalt, concrete, or gravel road surface. Scarify gravel roads to a minimum depth of 6 inches. Scarify or pulverize asphalt and concrete roads to 6 inches below the pavement. Reduce all particles to a maximum size of 6 inches and produce a uniform material. Compact the surface according to Subsection 204.11.

(c) Embankment across ground not capable of supporting equipment. Dump successive loads of embankment material in a uniformly distributed layer to construct the lower portion of the embankment. Limit the layer thickness to the minimum depth necessary to support the equipment.

(d) Embankment on an existing slope steeper than 1V:3H. Cut horizontal benches in the existing slope to a sufficient width to accommodate placement and compaction operations and equipment. Bench the slope as the embankment is placed and compacted in layers. Begin each bench at the intersection of the original ground and the vertical cut of the previous bench.

204.10 Embankment Construction. Incorporate only suitable roadway excavation material into the embankment. When the supply of suitable roadway excavation is exhausted, furnish unclassified borrow to complete the embankment. Obtain written approval before beginning construction of embankments over 6 feet high at subgrade centerline. Construct embankments as follows:

(a) General. At the end of each day's operations, shape to drain and compact the embankment surface to a uniform cross-section. Eliminate all ruts and low spots that could hold water.

During all stages of construction, route and distribute hauling and leveling equipment over the width and length of each layer of material.

Compact embankment side slopes flatter than 1V:1.75H with a tamping type roller or by walking with a dozer. For slopes 1V:1.75H or steeper, compact the slopes as construction of the embankment progresses.

Where placing embankment on one side of abutments, wing walls, piers, or culvert headwalls, compact the material using methods that prevent excessive pressure against the structure.

Where placing embankment material on both sides of a concrete wall or box structure, conduct operations so compacted embankment material is at the same elevation on both sides of the structure.

Where structural pilings are placed in embankment locations, limit the maximum particle size to 4 inches.

(b) Embankment within the roadway prism. Place embankment material in horizontal layers not exceeding 12 inches in compacted thickness. Incorporate oversize boulders or rock fragments into the 12-inch layers by reducing them in size or placing them individually as required by (c) below. Compact each layer according to Subsection 204.11 before placing the next layer.

Material composed predominately of boulders or rock fragments too large for 12-inch layers may be placed in layers up to 24 inches thick. Incorporate oversize boulders or rock fragments into the 24-inch layer by reducing them in size or placing them individually according to (c) below. Place sufficient earth and smaller rocks to fill the voids. Compact each layer according to Subsection 204.11 before placing the next layer.

(c) Individual rock fragments and boulders. Place individual rock fragments and boulders greater than 24 inches in diameter as follows:

(1) Reduce rock to less than 48 inches in the largest dimension.
(2) Distribute rock within the embankment to prevent nesting.
(3) Place layers of embankment material around each rock to a depth not greater than that permitted by (b) above. Fill all the voids between rocks.
(4) Compact each layer according to Subsection 204.11 before placing the next layer.

(d) Embankment outside of roadway prism. Where placing embankment outside the staked roadway prism, place material in horizontal layers not exceeding 24 inches in compacted thickness. Compact each layer according to Subsection 204.11.

204.11 Compaction. Compact the embankment using one of the following methods as specified:

(a) <u>Compaction A.</u> Use AASHTO T 27 to determine the amount of material retained on a Number 4 sieve. If there is more than 80 percent retained on the No. 4 sieve use procedure (1).

If there is 50 to 80 percent retained on the No. 4 sieve use procedure (2). If there is less than 50 percent retained on the No. 4 sieve use procedure (3).

(1) Adjust the moisture content to a level suitable for compaction. Fill the interstices around rock with earth or other fine material as practical. Use compression-type rollers at speeds less than 6feet per second and vibratory rollers at speeds less than 3 feet per second. Compact each layer of material full width with one of the following and until there is no visible evidence of further consolidation.

(a) Four roller passes of a vibratory roller having a minimum dynamic force of 40,000 pounds impact per vibration and a minimum frequency of 1000 vibrations per minute.
(b) Eight roller passes of a 20-ton compression-type roller.
(c) Eight roller passes of a vibratory roller having a minimum dynamic force of 30,000 pounds impact per vibration and a minimum frequency of 1000 vibrations per minute.

Increase the compactive effort for layers deeper than 12 inches as follows:

- For each additional 6 inches or fraction thereof, increase the number of roller passes in (a) above by four passes.
- For each additional 6 inches or fraction thereof, increase the number of roller passes in (b) and (c) above, by eight passes.

(2) Use AASHTO T 99 to determine the optimum moisture content of the portion of the material passing a No. 4 sieve. Multiply this number by the percentage of material passing a No. 4 sieve, and add 2 percent to determine the optimum moisture content of the material. Adjust the moisture content of material classified A-1 through A-5 to a moisture content suitable for compaction. Adjust the moisture content of material classified A-6 and A-7 to within 2 percent of the optimum moisture content.

Use compression-type rollers at speeds less than 6 feet per second and vibratory rollers at speeds less than 3 feet per second. Compact each layer of material full width according to (1) above.

(3) Classify the material according to AASHTO M 145. For material classified A-1 or A-2-4, determine the maximum density according to AASHTO T 180, method D. For other material classifications, determine the optimum moisture content and maximum density according to AASHTO T 99, method C.

Adjust the moisture content of material classified A-1 through A-5 to a moisture content suitable for compaction. Adjust the moisture content of material classified A-6 and A-7 to within 2 percent of the optimum moisture content.

Use compression-type or vibratory rollers. Compact each layer of material full width to at least 95 percent of the maximum density. Determine the in-place density and moisture content according to AASHTO T 310 or other approved test procedures. When required, use AASHTO T 224 to correct for coarse particles.

(b) <u>Compaction B.</u> Place material by end dumping to the minimum depth needed for operation of spreading equipment. Adjust the moisture content of the material to obtain a mass that will not visibly deflect under the load of the hauling and spreading equipment. Operate compaction equipment over the full width of each layer until there is no visible evidence of further consolidation or, if when a sheepsfoot roller is used, the roller "walks out" of the layer. Make at least three complete passes.

(c) <u>Compaction C.</u> Place material by end dumping to the minimum depth needed for operation of spreading equipment. Level and smooth each embankment layer before placing the next layers. Operate hauling and spreading equipment uniformly over the full width of each layer. Construct a solid embankment with adequate compaction by working smaller rock and fines in with the larger rocks to fill the voids, and by operating hauling and spreading equipment uniformly over the full width of each layer as the embankment is constructed.

204.12 Ditches. Slope, grade, and shape ditches. Remove all projecting roots, stumps, rock, or similar matter. Maintain all ditches in an open condition and free from leaves, sticks, and other debris.

Form furrow ditches by plowing or using other acceptable methods to produce a continuous furrow. Place all excavated material on the downhill side so the bottom of the ditch is approximately 18 inches below the crest of the loose material. Clean the ditch using a hand shovel, ditcher, or other suitable method. Shape to provide drainage without overflow.

204.13 Sloping, Shaping, and Finishing. Complete slopes, ditches, culverts, riprap, and other underground minor structures before placing aggregate courses. Slope, shape, and finish as follows:

(a) Sloping. Leave all earth slopes with uniform roughened surfaces, except as described in (b) below, with no noticeable break as viewed from the road. Except in solid rock, round tops and bottoms of all slopes including the slopes of drainage ditches. Round material overlaying solid rock to the extent practical. Scale all rock slopes. Slope rounding is not required on tolerance class D though M roads.

If a slide or slipout occurs on a cut or embankment slope, remove or replace the material, and repair or restore all damage to the work. Bench or key the slope to stabilize the slide. Reshape the cut or embankment slope to an acceptable condition.

(b) Stepped slopes. Where required by the contract, construct steps on slopes of 1⅓V:1H to 1V:2H. Construct the steps approximately 18 inches high. Blend the steps into natural ground at the end of the cut. If the slope contains nonrippable rock outcrops, blend steps into the rock. Remove loose material found in transitional area. Except for removing large rocks that may fall, scaling stepped slopes is not required.

(c) Shaping. Shape the subgrade to a smooth surface and to the cross-section required. Shape slopes to gradually transition into slope adjustments without noticeable breaks. At the ends of

cuts and at intersections of cuts and embankments, adjust slopes in the horizontal and vertical planes to blend into each other or into the natural ground.

(d) Finishing. Finish the roadbed to be smooth and uniform, and shaped to conform to the typical sections. Remove unsuitable material from the roadbed and replace it with suitable material. Finish roadbeds to the tolerance class shown in table 204-2.Ensure that the subgrade is visibly moist during shaping and dressing. Scarify to 6 inches below the bottom of low sections, holes, cracks, or depressions and bring back to grade with suitable material. Maintain proper ditch drainage.

For surfaced roads, remove all material larger than 6 inches from the top 6 inches of the roadbed.

For unsurfaced roads, use one of the following methods to finish the roadbed:

(1) **Method A**. Remove all material larger than 6 inches from the top 6 inches of the roadbed and replace with suitable material.
(2) **Method B**. Use a vibratory grid roller or approved equal with a minimum weight of 10 tons. Roll at least 5 full-width passes or until there is no visible evidence of further consolidation.
(3) **Method C**. For roads designated as Construction Tolerance Class K, L, or M, finish the roadbed by spreading the excavation. Eliminate rock berms.

204.14 Disposal of Unsuitable or Excess Material. Dispose of unsuitable or excess material at designated sites or legally off of the project.

When there is a pay item for waste, shape and compact the waste material in its final location. Do not mix clearing or other material not subject to payment with the waste material.

204.15 Acceptance. See Table 204-1 for sampling and testing requirements.

Material for embankment and conserved topsoil will be evaluated under Subsections 106.02 and 106.04.

Excavation and embankment construction will be evaluated under Subsections 106.02 and 106.04.

Clearing and removal of obstructions will be evaluated under Sections 201 and 203.

Measurement

204.16 Measure the Section 204 items listed in the bid schedule according to Subsection 109.02 and the following as applicable.

(a) Roadway excavation. Measure roadway excavation in its original position as follows:

(1) Include the following volumes in roadway excavation:

(a) Roadway prism excavation;
(b) Rock material excavated and removed from below subgrade in cut sections;
(c) Unsuitable material below subgrade and unsuitable material beneath embankment areas when a pay item for subexcavation is not shown in the bid schedule;
(d) Ditches, except furrow ditches measured under a separate bid item;
*(e*Topsoil;
(f) Borrow material used in the work when a pay item for borrow is not shown in the bid schedule;
(g) Loose scattered rocks removed and placed as required within the roadway;
(h) Conserved material taken from stockpiles and used in Section 204 work; and
(i) Slide and slipout material not attributable to the Contractor's method of operation.

(2) Do not include the following in roadway excavation:
(a) Overburden and other spoil material from borrow sources;
(b) Overbreakage from the backslope in rock excavation;
(c) Water or other liquid material;
(d) Material used for purposes other than required;
(e) Roadbed material scarified in place and not removed;
(f) Material excavated when stepping cut slopes;
(g) Material excavated when rounding cut slopes;
(h) Preparing foundations for embankment construction;
(i) Material excavated when benching for embankments;
(j) Slide or slipout material attributable to the Contractor's method of operation;
(k) Conserved material taken from stockpiles constructed at the option of the Contractor; and
(l) Material excavated outside the established slope limits.

(3) When both roadway excavation and embankment construction pay items are shown in the bid schedule, measure the following as roadway excavation only:
(a) Unsuitable material below subgrade in cuts and unsuitable material beneath embankment areas when a pay item for subexcavation is not shown in the bid schedule;
(b) Slide and slipout material not attributable to the Contractor’s method of operations; and
(c) Drainage ditches, channel changes, and diversion ditches.

(b) Unclassified borrow, select borrow, and select topping. When measuring by the cubic yard measure in its original position. If borrow excavation is measured by the cubic yard in place, take initial cross-sections of the ground surface after stripping overburden. Upon completion of excavation and after the borrow source waste material is returned to the source, retake cross-sections before replacing the overburden.
Do not measure borrow excavation used in place of excess roadway excavation.

(c) Embankment construction. Measure embankment construction in its final position. Do not make deductions from the embankment construction quantity for the volume of minor structures.

(1) Include the following volumes in embankment construction:
(a) Roadway embankments;
(b) Material used to backfill subexcavated areas, holes, pits, and other depressions;
(c) Material used to restore obliterated roadbeds to original contours; and
(d) Material used for dikes, ramps, mounds, and berms.

(2) Do not include the following in embankment construction:
(a) Preparing foundations for embankment construction;
(b) Adjustments for subsidence or settlement of the embankment or of the foundation on which the embankment is placed; and
(c) Material used to round fill slopes.

(d) Rounding cut slopes. Measure rounding cut slopes horizontally along the centerline of the roadway if a pay item for slope rounding is included in the bid schedule. If a pay item for slope rounding is not included in the bid schedule slope rounding will be considered subsidiary to excavation.

(e) Waste. Measure waste by the cubic yard in its final position. Take initial cross-sections of the ground surface after stripping over burden. Upon completion of the waste placement, retake cross-sections before replacing overburden.

(f) Slope scaling. Measure slope scaling by the cubic yard in the hauling vehicle.

Payment

204.17 The accepted quantities will be paid at the contract price per unit of measurement for the Section 204 pay items listed in the bid schedule. Payment will be full compensation for the work prescribed in this Section. See Subsection 109.05.

Table 204-1
Sampling and Testing Requirements

Material or Product	Type of Acceptance (Subsection)	Characteristic	Category	Test Methods Specifications	Sampling Frequency	Point of Sampling	Split Sample	Reporting Time
Topping (704.05) & unclassified borrow (704.06)	Measured and tested for conformance (106.04)	Classification	—	AASHTO M 145	1 per soil type	Processed material before incorporating in work	Yes, when requested	Before using in work
		Moisture-density	—	AASHTO T 180, method D[1] or T 99, method C[1]	1 per soil type but not less than 1 per	"	"	"
		Compaction	—	AASHTO T 310 or other approved procedures	1 per 6000 yd^2 but not less than 1 per layer	In-place	—	Before placing next layer
Select borrow (704.07 & Select topping (704.08)	Measured and tested for conformance (106.04)	Classification	—	AASHTO M 145	1 per soil type but not less than 1 for each day of production	Processed material before incorporating	Yes, when requested	Before using in work
		Gradation	—	AASHTO T 27	"	"	"	"
		Liquid limit	—	AASHTO T 89	"	"	"	"
		Moisture-density	—	AASHTO T 180, method D[1] or T 99, method C[1]	1 per soil type but not less than 1 per	"	"	"
		Compaction	—	AASHTO T 310 or other approved procedures	1 per 6000 yd^2 but not less than 1 per layer	In-place	—	Before placing next layer

(1) Minimum of 5 points per proctor

Table 204-1 (continued)
Sampling and Testing Requirements

Material or Product	Type of Acceptance (Subsection)	Characteristic	Category	Test Methods Specifications	Sampling Frequency	Point of Sampling	Split Sample	Reporting Time
Earth embankment (204.11, Compaction A)	Measured and tested for conformance (106.04)	Classification	—	AASHTO M 145	1 per soil type	Source of Material	Yes, when requested	Before using in work
		Moisture-density	—	AASHTO T 180, method D[1] or T 99, method C[1]	1 per soil type but not less than 1 per 13,000 yd^3	"	"	"
		Compaction	—	AASHTO T 310 or other approved procedures	1 per 3500 yd^2 but not less than 1 per layer	In-place	—	Before placing next layer
Top of subgrade (204.11 Compaction A)	Measured and tested for conformance (106.04)	Compaction	—	AASHTO T 310 or other approved procedures	1 per 2500 yd^2	In-place	—	Before placing next layer

(1) Minimum of 5 points per proctor.

Table 204-2
Construction Tolerances

	Tolerance Class [a]												
	A	**B**	**C**	**D**	**E**	**F**	**G**	**H**	**I**	**J**	**K**	**L**	**M**
Roadbed width (ft)	+0.5	+0.5	+1.0	+1.0	+1.0	+1.0	+1.5	+1.0	+2.0	+2.0	+2.0	+2.0	+2.0
Subgrade elevation (ft)	±0.1	±0.2	±0.2	±0.5	±0.5	±1.0	±1.0	±1.5	±2.0	±3.0	±2.0	±3.0	(c)
Centerline alignment (ft)	±0.2	±0.2	±0.5	±0.5	±1.0	±1.0	±1.5	±1.5	±2.0	±3.0	±3.0	±5.0	(c)
Slopes, excavation, and embankment (% slope[b])	±3	±5	±5	±5	±5	±5	±10	±10	±10	±10	±20	±20	±20

(a) Maximum allowable deviation from construction stakes and drawings.
(b) Maximum allowable deviation from staked slope measured from slope stakes or hinge points.
(c) Unless otherwise shown the centerline alignment and subgrade elevation, as built, have no horizontal curves with a radius of less than 80 feet, and no vertical curves with a curve length of less than 80 feet when the algebraic difference in the grade change is less than 10 percent, or a curve length of less than 100 feet when the algebraic difference of the grade change is greater than or equal to 10 percent. The centerline grade is not to exceed 20 percent in 100 feet of length.

204.11 Compaction.

Delete the first paragraph and replace it with the following:

For compaction according to method (a), (b), or (c), use AASHTO T 27 to determine the amount of material retained on a Number. 4 sieve. For compaction methods (d) or (e) no sieve test is required.

Add the following compaction methods:

(d) Layer Placement Method (Hauling and Spreading Equipment). Place material by end dumping to the minimum depth needed for operation of spreading equipment. Level and smooth each embankment layer before placing the next layer~~s~~. Operate hauling and spreading equipment uniformly over the full width of each layer. Construct a solid embankment with adequate compaction by working smaller rock and fines in with the larger rocks to fill the voids~~,~~ and by operating hauling and spreading equipment uniformly over the full width of each layer as the embankment is constructed.

(e) Layer Placement (Roller Compaction) Method. Place material by end dumping to the minimum depth needed for operation of spreading equipment. Adjust the moisture content of the material to obtain a mass that will not visibly deflect under the load of the hauling and spreading equipment. Operate compaction equipment over the full width of each layer until visible deformation of the layer ceases or, in when a sheepsfoot roller is used, the roller “walks out” of the layer. Make at least three complete passes.

249 - Composite Road Construction

249.00_0116_us_03_31_2005

Description

249.01 This work consists of clearing and grubbing, excavation and embankment, and removal of all construction slash including designated trees. During excavation and embankment, excavate and use borrow material; excavate drainage; shape the roadway, including approaches, turnarounds, ditches, and drainage dips; and place all excavated material, regardless of nature. Perform erosion control by furnishing and placing seed, fertilizer, mulch, and tackifer. Construct the roadway in conformance with the dimensions shown on the plans or designated by the CO.

Materials

249.02 Ensure that materials meet the requirements specified in the following section and subsection:

Seeding and Mulching	625
Stabilizing Emulsion Tackifers	713.02

Construction Requirements

249.03 Clearing and Disposal. Protect construction stakes and construction control markers. Remove or treat all trees, snags, downed timber, brush, and stumps within the clearing limits according to the following specifications:

(a) Merchantable Timber. Treat according to Subsection 201.06

(b) Unmerchantable Timber. Treat according to Subsection 203.05 Method (i)

(c) Large Construction Slash. Treat construction slash larger than 3 inches in diameter and longer than 3 feet by one or more of the following methods, as shown on the plans:

(1) Method A. Incorporate construction slash in the embankment.

(2) Method B. Windrow construction slash inside the clearing limits. When slash is windrowed, place it approximately parallel to the roadway outside the toe of the fill slope.

(3) Method C. Scatter construction slash outside the roadway without damaging trees. Limb all logs. Place logs and stumps away from trees, positioned so they will remain in place and are not on top of one another.

(4) Method D. Construct piles that are free of soil, with smaller slash well mixed with larger slash. Buck unmerchantable logs into lengths less than 18 feet prior to placement in piles.

(5) Method E. Sidecast construction slash into the area below the roadway. Slash my be sidecast beyond the lower clearing limit not to exceed 10 feet.

(6) Method F. Bury construction slash within the roadway limits. Construct mats in layers and cover the mats with at least 18 inches of rock and soil.

(7) Method G. Construct piles of construction slash in the areas designated on the ground. Construct the piles so that burning does not damage standing trees. Burn the piles until all the material remaining in the pile is charred or ash.

(8) Method H. Bury the construction slash outside the roadway the locations designated on the ground. Construct mats in layers, and cover the mats with at least 18 inches of rock and soil. Slope the final surface to drain.

(9) Method J. Construct a debris mat of construction slash under the road subgrade. Use tree limbs, tops cull logs, split stumps, wood chunks, and other debris to form a mat. Place stumps upside down and blended into the mat.

Small Construction Slash. Construction slash less than 3 inches in diameter and less than 3 feet long may be incorporated into embankments so long as the material is distributed so that it does not result in concentrations or matting.

Immediately remove slash deposited in stream courses.

Fell all dead trees outside the clearing limits that lean toward the road and are sufficiently tall to reach the roadbed. Fell hazard or unstable live trees designated on the ground outside the clearing limits before felling timber in the immediate clearing vicinity.

Leave stump heights less than 1 foot or one-third of the stump diameter whichever is greater, measured on the side adjacent to the highest ground. Leave felled trees outside the clearing limits in place.

249.04 Pioneering. Do not undercut the final back slope during pioneer operations. Deposit material inside the roadway limits. Do not restrict drainage.

249.05 Grubbing. Grub within the specified limits. Stumps outside the grubbing limits remain if cut no higher than 1 foot or one-third of the stump diameter, whichever is greater, above the original ground, measured on the uphill side, unless otherwise designated. Grub stumps that will protrude through the subgrade or have less than 6 inches of cover.

249.06 Excavation and Embankment. Construct the roadway to conform to the typical sections shown on the plans. Protect backslopes from being undercut. Embankment may be placed by side casting and end dumping.

Locate and use borrow material, and remove and treat unsuitable or excess material, as designated.

Place rocks that are too large to be incorporated in the embankment outside the traveled way on the downhill side such that they will not roll, obstruct drainage, or hinder roadbed use and maintenance.

Leave slopes that are to be seeded in a roughened condition.

Shape and finish the roadbed to the condition ordinarily accomplished by a crawler tractor with dozer blade to provide drainage of surface water. Do not permit individual rocks to protrude more than 4 inches above the subgrade of the roadbed. A motor grader finish is not required.

Observe a width tolerance of (+) 18 inches f or the traveled way.

249.07 Erosion Control. Perform erosion control measures, including seeding. Use methods and applications rates, and types of seed, fertilizer, mulch, and tackifer, as specified in Section 625. Apply materials uniformly to the areas to be treated..

Measurement

249.08 Measure the Section 249 items listed in the bid schedule according to Subsection 109.02.

Payment

249.09 The accepted quantities will be paid at the contract price per unit of measurement for the Section 249 pay items listed in the bid schedule. Payment will be full compensation for the work prescribed in this Section. See Subsection 109.05.

301 - Untreated Aggregate Courses

301.00_nat_us_03_03_2005

301 Title Change.

Change the title to: **Section 301 Aggregate Courses**

301.05_nat_us_05_17_2005

301.05 Compacting

Delete and replace with the following:

Compact each layer full width. Roll from the sides to the center, parallel to the centerline of the road. Along curbs, headers, walls, and all places not accessible to the roller, compact the material with approved tampers or compactors.

Compact the aggregate using one of the following methods as specified:

Compaction A. Operating spreading and hauling equipment over the full width of the travelway.

Compaction B. Operate rollers and compact as specified in Subsection 204.11(a)(1).

Compaction C. Moisten or dry the aggregate to a uniform moisture content between 5 and 7 percent based on total dry weight of the mixture. Operate rollers and compact as specified in Subsection 204.11(a)(1).

Compaction D. Compact to a density of at least 95 percent of the maximum density, as determined by AASHTO T 99, method C or D.

Compaction E. Compact to a density of at least 96 percent of the maximum density, as determined by the Modified Marshall Hammer Compaction Method (available upon request from USDA Forest Service, Regional Materials Engineering Center, P.O. Box 7669, Missoula, MT 59807).

Compaction F. Compact to a density of at least 95 per-cent of the maximum density, as determined by AASHTO T 180, method C or D.

Compaction G. Compact to a density of at least 100 percent of the maximum density as determined by the Modified Marshall Hammer Compaction Method (available upon request from USDA Forest Service, Regional Materials Engineering Center, P.O. Box 7669, Missoula, MT 59807).

For all compaction methods, blade the surface of each layer during the compaction operations to remove irregularities and produce a smooth, even surface. When a density requirement is specified, determine the in place density and moisture content according to AASHTO T 310 or other approved test procedures.

301 - Untreated Aggregate Courses

301 Title Change.

Change the title to: **Section 301 Aggregate Courses**

301.05_nat_us_05_17_2005

301.05 Compacting

Delete and replace with the following:

Compact each layer full width. Roll from the sides to the center, parallel to the centerline of the road. Along curbs, headers, walls, and all places not accessible to the roller, compact the material with approved tampers or compactors.

Compact the aggregate using one of the following methods as specified:

Compaction A. Operating spreading and hauling equipment over the full width of the travelway.

Compaction B. Operate rollers and compact as specified in Subsection 204.11(a)(1).

Compaction C. Moisten or dry the aggregate to a uniform moisture content between 5 and 7 percent based on total dry weight of the mixture. Operate rollers and compact as specified in Subsection 204.11(a)(1).

Compaction D. Compact to a density of at least 95 percent of the maximum density, as determined by AASHTO T 99, method C or D.

Compaction E. Compact to a density of at least 96 percent of the maximum density, as determined by the Modified Marshall Hammer Compaction Method (available upon request from USDA Forest Service, Regional Materials Engineering Center, P.O. Box 7669, Missoula, MT 59807).

Compaction F. Compact to a density of at least 95 per-cent of the maximum density, as determined by AASHTO T 180, method C or D.

Compaction G. Compact to a density of at least 100 percent of the maximum density as determined by the Modified Marshall Hammer Compaction Method (available upon request from USDA Forest Service, Regional Materials Engineering Center, P.O. Box 7669, Missoula, MT 59807).

For all compaction methods, blade the surface of each layer during the compaction operations to remove irregularities and produce a smooth, even surface. When a density requirement is specified, determine the in place density and moisture content according to AASHTO T 310 or other approved test procedures.

301.10_nat_us_03_03_2005

301.10 Payment

Delete the following:

adjusted according to Subsection 106.05

602 - Culverts and Drains

602.03_nat_us_09_06_2005

602.03 General.

Add the following:

Ensure that the final installed alignment of all pipe allows no reverse grades, and does not permit horizontal and vertical alignments to vary from a straight line drawn from center of inlet to center of outlet by more than 2 percent of pipe center length or 1.0 feet, whichever is less.

625 - Turf Establishment

625.05_nat_us_03_30_2005

625.05 Watering.

Delete the entire subsection

625.07_nat_us_02_25_2005

625.07 Seeding. (a) Dry method.

Remove the last sentence “Lightly compact the seedbed within 24 hours after seeding.”

625.07 Seeding. (b) Hydraulic method.

Add the following:

Apply fertilizer conforming to Subsection 713.03 at the rates shown in Table 625-1. Fertilize areas inaccessible to hydro-type equipment by hand.

Table 625-1. Fertilizer Application Rate. SEE DRAWINGS

Type	Quantity per Slurry Unit

: :	__lbs
: :	__lbs

Apply the seed mixture at the rate of _____ kilograms of live seed per _____ (hectare/slurry unit). Include a tracer material consisting of either wood fiber mulch or grass cellulose fiber mulch to provide visible evidence of uniform application. Add the tracer to the slurry at a rate of _____ (400 pound per acre or 100 pound per slurry unit). Seed areas inaccessible to hydro-type equipment by hand.

633 - Permanent Traffic Control

633.03_nat_us_03_03_2005

633.03 General.

Delete the subsection and add the following:

Furnish traffic control devices and guide signs according to the MUTCD, approved USDA-FS and state supplements, the current edition of USDA-FS EM-7100-15 Sign and Poster Guidelines for the Forest Service, and Standard Highway Signs published by FHWA. Submit the sign list for approval before ordering.

718 - Traffic Signing and Marking Material

718.05_nat_us_08_05_2009

718.05 Aluminum Panels

Delete the third paragraph and replace with the following:

Clean, degrease and properly prepare the panels according to methods recommended by the sheeting manufacturer. Conversion coatings will conform to ASTM B-921 or ASTM B-449.