ROAD STRUCTURE DETAILS

NO SCALE

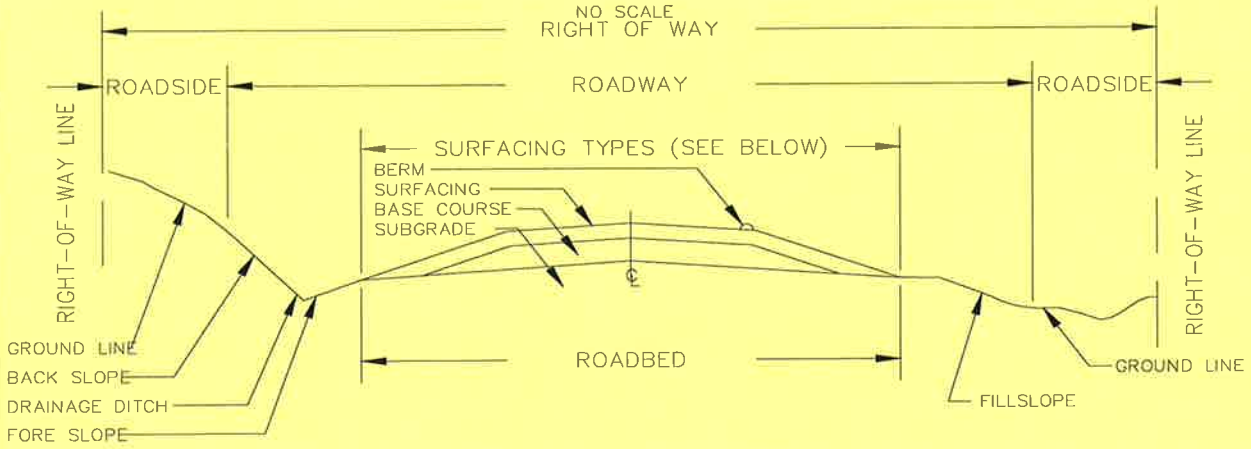

DEFINITIONS BY SURFACING TYPE

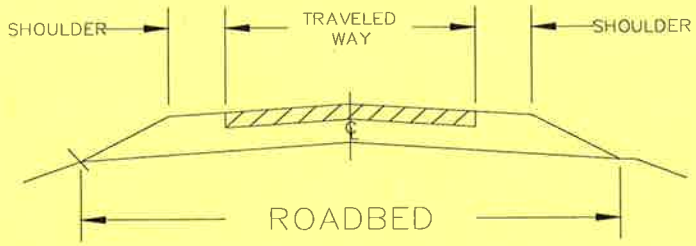

ASPHALT PAVED SURFACING SECTION

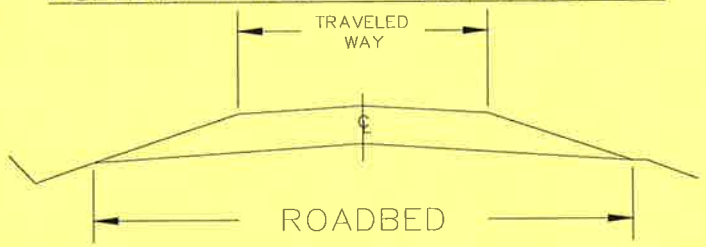

AGGREGATE SURFACING SECTION

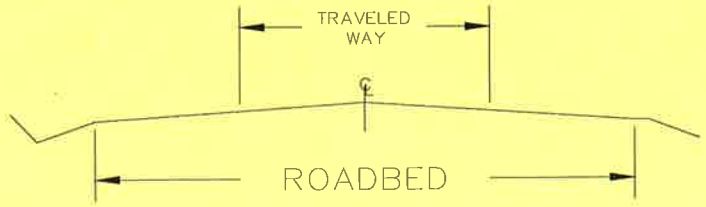

NATIVE MATERIAL SURFACING SECTION

NOTES

SHAPES AND DIMENSIONS WILL VARY WITH LOCAL CONDITIONS.

	TITLE ILLUSTRATION OF ROAD MAINTENANCE TERMS	
	DRAWING 801-1	APPROVED

T-803 - SNOW REMOVAL (2/02)

803.01 Description

This Section provides for removal of snow from roads to facilitate logging operations and safe use.

803.02 Maintenance Requirements

a. The Sign Plan the SPS will be amended as needed for snow removal operations under b(9)(a) or (b) below.

b. If Purchaser elects to remove snow, meet the following requirements:

(1) Erect signs required by the amended Sign Plan in the SPS.

(2) Perform work in a manner to preserve and protect roads and appurtenances, and to prevent erosion damage to roads, streams, and other Forest values.

(3) Do not undercut banks or blade gravel or other surfacing material off the road.

(4) Keep roadbed drainage ditches, drain dips, and culverts functional when needed during operations and upon completion of operations.

(5) Control snow removal to identify the usable traveled way having roadbed support. Reshape over-width plowing as necessary to define the usable width.

(6) Space, construct, and maintain drainage holes in the dike of snow or berm caused by snow removal operations. Place drain holes to obtain surface drainage without discharging on erodible fills.

(7) Close roads to wheeled vehicles at times and in the manner specified in C(T)5.12 or the Road Rules document.

(8) Upon seasonal completion of Purchaser's Operations, effectively block the road by a snow barricade, unless otherwise agreed.

(9) Remove snow for either public access or project use as established in the SPS and meet the following requirements:

(a) Removal for Public Access (Method JU) - Remove snow from all of the traveled way, including turnouts, for safe and efficient use for both timber transportation and the public. Remove intruding windfalls, debris, or slough and slide material for the full width of the traveled way and deposit out of drainage's at agreed upon locations.

(b) Removal for Project Use (Method TS) - Remove snow from all or part of the traveled way, including sufficient turnouts for safe and efficient use for timber transportation and to protect the road. Remove intruding windfalls, debris or slough and slide material and dispose of only as necessary to provide passage for timber

transportation. Removed materials may be deposited off the traveled way or outside the traveled way at agreed upon locations.

(10) Upon notice replace in kind, within sixty (60) days after the start of Normal Operating Season, any surfacing material which has been bladed off the road, unless otherwise agreed. Forest Service will notify Purchaser in writing as to the cubic meter equivalent of bladed off material by the start of the normal operating season.

803.03 Equipment

Purchaser may use any type of equipment to remove snow, providing:

a. Type or use of equipment is not restricted in C(T)5.12 or Road Rules document.

b. Equipment is of the size and type commonly used to remove snow and will not cause damage to the road.

c. The use of plows or dozers to remove snow requires written Forest Service approval. Equip plows or dozers with shoes or runners to keep the dozer blade a minimum of 50 mm (2 inches) above the road surface unless agreed otherwise.

803.04 Ice Control

Ice control may be performed by Purchaser when approved by Forest Service in writing. Such approval will include ice control materials, application rates, and any specific requirements of use.

SPECIAL PROJECT SPECIFICATION (6/03)
T-803-01F
SNOW REMOVAL

803.02 Maintenance Requirements

a. Delete the paragraph and add the following: The Traffic Control Plan specified in B(T)6.33 Safety will be amended as needed for snow removal operations under b. (9) (a) or (b).

b. (1) Delete the sentence and add the following: Erect signs required by the amended Traffic Control Plan and Drawings specified in B(T)6.33 Safety.

(9) Delete the sentence and add the following: Remove snow for either public access or project use as listed in C(T)5.31# Road Maintenance Requirements, and meet the requirements set forth in the amended Traffic Control Plan.

T-811 BLADING (2/02)

811.01 Description -

This work consists of surface blading the traveled way to a condition to facilitate traffic and Provide proper drainage. Blading includes shaping the crown or slope of traveled way, berms, and drainage dips in accordance with this specification. Compaction is required when shown on the road listing.

811.02 Maintenance Requirements

A. Timing- Perform surface blading during the contract period as often as needed to provide conditions stated for the maintenance level of the road.

B. General -

1. Blade and shape the existing traveled way and shoulders, including turnouts , to produce a surface which is uniform, consistent to grade, and crowned or cross-sloped as indicated by the character of the existing surface, unless otherwise shown in the Road Listing, to at least 13 mm (½ inch) per .305 meter (1 foot) of width, but not more than 19 mm (¾ inch) per .305 meter (1 foot) of width. Thoroughly loosen surfacing material to no less than 50 mm (2 inches) depth or the depth of potholes or corrugations. Scarification to facilitate cutting to the full depth of potholes or corrugations may be elected, but will be considered incidental to blading. Do not scarify deep enough to cause contamination of the surfacing.

2. Apply water during blading when sufficient moisture is not present to prevent segregation. Supply, haul, and apply water in accordance with Section T-891.

3. Shape existing native rock or aggregate surfaced drainage dips to divert surface runoff to existing outlet devices, ditches, or discharge locations.

4. Establish a blading pattern which provides a uniform driving surface, retains the surfacing on the roadbed, and provides a thorough mixing of the materials within the completed surface width. Upon final blading, no disturbed rock shall protrude more than 50 mm (2 inches) above the adjacent surface unless otherwise provided in the contract. Remove and place outside the roadbed material not meeting this dimension so as not to obstruct drainageways or structures. This material may be scattered off the roadbed if there is free drainage.

C. Routine Blading -

1. Conform to the dimensions SHOWN ON THE DRAWINGS or designated in the SPECIAL PROJECT SPECIFICATIONS upon completion of blading.

2. Shape roadbed width in excess of the dimensions shown only as needed to provide drainage away from the traveled way. Do not remove established grasses and other vegetation from the excess width except as incidental to providing drainage or unless otherwise provided in the contract.

D. Compaction -

Roads requiring compaction will be included in the Road Listing. Unless Compaction Method B is designated in the Road Listing, all traveled ways requiring compaction shall be compacted by Method A. Compaction shall commence immediately following blading.

Compaction methods are:

Compaction Method A: By breaking track while operating equipment on the traveled way.

Compaction Method B: 7-9 metric ton (7-10 ton) pneumatic, steel, or equivalent vibratory roller, operated to cover the full width two (2) times.

E. Undercutting - Undercutting roadway back slope is not permitted.

F. Intersections

1. At intersections, blade the roadbeds of side roads which are not closed or restricted from vehicular use to ensure smooth transitions.

2. Signing, cross ditching in the road surface (traveled way), earth berms, or other devices placed to discourage or eliminate use by passenger cars, are field evidence of road closure or restriction. Roads listed for work under Sections T-835, T-836, T-838, or T-839 are considered restricted.

3. Side roads listed for work under this Section are not restricted.

G. Cleaning of Structures - Do not allow materials resulting from work under this Section to remain on or in structures, such as bridges, culverts, cattle guards, or drainage dips.

H. Berms - Maintain existing berms to the condition of adjacent segments. Do not create new berms (windrows).

I. Smooth blading - Smooth blading may be used as an interim measure to remove loose surfacing material from the wheel paths, and store removed materials in a recoverable windrow, until blade processing as described in this section is feasible. Watering will not be required for smooth blading. Accomplish smooth blading without distorting the existing cross-slope or crown of the traveled way.

Move and store loose surfacing materials on the high side of super-elevated curves and sections with uniform inslope or outslope. In crowned sections, store the material on either or both sides as elected. Windrow and place stored materials to provide not less than 3.6 meters (12 feet) of smooth traveled way on one-lane segments, or 6 meters (20 feet) of smooth traveledway on two-lane segments, or segments with turnouts. Cut holes through windrows, which may collect water on the road, for drainage at least every 150 meters (500 feet).

T-812 - DUST ABATEMENT (2/02)

812.01 Description

This work consists of applying dust palliatives on roads shown in the Road Listing.

812.02 Materials

The dust palliative materials are shown in the road listing, unless shown as Optional for Purchaser's election. If Optional is shown then the Purchaser may use any of the products listed below. Dust palliative materials shall meet the following requirements:

A. Water (H2O) will be obtained from sources SHOWN ON THE DRAWINGS or listed in the SPECIAL PROJECT SPECIFICATIONS to Section T-891 Water Supply, unless otherwise agreed.

B. Lignin Sulfonate (LIG S) is the chemical residue produced as a by-product of the acid sulfite pulping process, and supplied as a water solution. The base solution is ammonia, calcium, or sodium and is water soluble to allow field dilution. Provide certification that the material meets the requirements of Subsection 723.03 of the "Forest Service Specifications for Construction of Roads and Bridges".

C. Magnesium Chloride (MG CL2) is the liquid residue of evaporative mineral recovery processes. Provide certification that that the material meets the requirements of Subsection 723.01 of the "Forest Service Specifications for Construction of Roads and Bridges".

D. Calcium Chloride Brine (CA CL2B). Provide certification that the material meets the requirements of Subsection 723.03 of the "Forest Service Specifications for Construction of Roads and Bridges".

E. Calcium Chloride Flake (CA CL2F). Provide certification that that the material meets the requirements of Subsection 723.02 of the "Forest Service Specifications for Construction of Roads and Bridges".

F. Bituminous dust palliatives. Manufacture materials specifically for dust abatement purposes which conform to the requirements of Section T-892 for each listed road in the Road Listing.

812.03 Methods

As shown in the SPECIAL PROJECT SPECIFICATIONS, Purchaser may utilize a variety of methods, including reducing the number of loads, the time of day the loads are hauled, etc., to decrease or eliminate the need for dust abatement.

812.04 Equipment

A. Design, equip, and operate application equipment for spreading dust palliatives so that the material is uniformly applied at the rate and traveled way widths shown in the Road Listing.

B. For bituminous palliatives provide equipment that heats and applies the bituminous material. Provide a bituminous distributor that is self-powered and mounted on pneumatic tires and equipped with a pump and circulating spray bar, a tachometer, pressure gauges, accurate volume measuring devices such as visual volume dial or gauge calibrated to the tank, and a thermometer. Provide equipment which is a standard commercial type of proven performance.

C. Accomplish dilution of dust palliatives within the application vehicle with the water source protected from contamination. Circulate the resulting mixture at least five (5) minutes to ensure uniform mixing prior to application.

812.05 Maintenance Requirements

A. Limit water applications to abatement for hauling vehicles and provide at a frequency and rate which controls dust such that vehicle tail lights and turn signals remain visible. Vary rates of application as needed but remain low enough to avoid forming rivulets. Accomplish the abatement by sufficient frequency of application without saturating and softening the traveled way. Compacted or glazed road surface or wheel tracks may be loosened as needed for water penetration.

B. Apply all other dust palliatives at the rates and times agreeable to the Government. The Road Listing shows the expected average application rate and may be varied to meet field conditions. Lignin Sulfonate, Magnesium Chloride, and Calcium Chloride Brine are listed as liters per square meter of the undiluted product at fifty (50), thirty-three (33), and thirty-eight (38) percent respectively. Calcium Chloride Flake is listed in Kilograms per square meter at seventy-seven (77) percent concentration.

C. Apply bituminous dust palliatives only when the surface to be treated contains sufficient moisture to obtain uniform distribution of the dust palliative unless noted differently in the SPECIAL PROJECT SPECIFICATIONS.

D. Prior to initial application, when needed, the road will be bladed and shaped under Section T-811, Blading.

E. Required subsequent applications may be applied to the existing road surface without blading.

F. Dust palliatives will not be applied in a manner that spatters or mars adjacent structures or trees, or placed on or across cattleguards or bridges. Discharge dust abatement material only on roads approved by the Government.

SPECIAL PROJECT SPECIFICATION (6/03)
T-812-01F
DUST ABATEMENT

812.03 Methods

Delete the words "As shown in the SPECIAL PROJECT SPECIFICATIONS" and substitute the following: Roads to be treated with dust abatement are listed in C(T)5.31# Road Maintenance Requirements.

T-831 DITCH MAINTENANCE (2/02)

831.01 Description

This Section provides for routine maintenance of various types of ditches to provide a waterway which is unobstructed, as shown on the road listing or marked on the ground.

831.02 Maintenance Requirements

A. Maintain ditches by removing rock, soil, wood, and other materials. Maintained ditches shall function to meet the intent of the original design.

B. Undercutting backslopes during removal operations is not permitted.

C. Suitable material up to 100 mm (4 inches) in greatest dimension removed from the ditches may be blended into existing native road surface and shoulder or placed in designated berm.

D. Do not blend material from ditch cleaning operations into aggregate surfaced roads. Do not blade material across aggregate or bituminous surfaced roads, unless approved in writing by the Government.

E. Haul material in excess of 831.02 D or subject to 831.02 E to a designated waste area under Section T-832. Remove excess materials temporarily stored on the ditch slope or edge of the shoulder daily.

F. Remove limbs and wood chunks in excess of 300 mm (12 inches) in length or 75 mm (3 inches) in diameter from ditches and place outside the roadway.

G. Clean paved surfaces of all materials resulting from ditch maintenance work.

H. Shape lead-off ditches to drain away from the traveled way.

T-832 REMOVE AND END HAUL MATERIALS (2/02)

832.01 Description

Work consists of loading, hauling, and placing of slide, slough, or excess materials such as rock, soil, vegetation, and other materials to designated disposal sites.

832.02 Maintenance Requirements

A. Remove, end haul, and dispose of excess materials generated by work under other Sections of this contract.

B. Remove the slide and slough materials in the area extending approximately 2 meters (6 feet) vertically above the road surface and not more than 1 meter (3 feet) downslope from the roadbed. Dispose of material at designated sites as SHOWN ON THE DRAWINGS or identified in SPECIAL PROJECT SPECIFICATIONS.

Reshape the slope which generated the slide material as nearly as practical to its original condition by equipment operating from road surface. Reshaping of roadside ditches in slide area shall be in accordance with Section T-831.

C. When approved by the Government, fill slumps by compacting selected materials into roadway depressions. Compaction is by Method 2.

D. Place all materials in disposal sites as specified in the SPECIAL PROJECT SPECIFICATIONS, or as SHOWN ON THE DRAWINGS.

1. Method 1 - Side Casting and End Dumping. Material may be placed by side casting and end dumping. Where materials include large rocks, provide a solid fill by working smaller pieces and fines into voids. Shape the finished surfaces to drain.

2. Method 2 Layer Placement - Step or roughen surfaces on which materials are to be placed prior to placing any material. Place materials in approximately horizontal layers no more than 300 mm (12 inches) thick. Compact each layer by operating hauling and spreading equipment over the full width of each layer.

E. Repair any damage to existing aggregate or pavement surfaces

SPECIAL PROJECT SPECIFICATION (6/03)

T-832-01F

REMOVAL AND END HAUL MATERIALS

832.02 Maintenance Requirements

B. Add the following after the first sentence: Disposal of slough material shall be at the HWY 58 aggregate source, Township 23 S., Range 6 E., Section 24. On roads listed in C(T)5.31# Road Maintenance Requirements.

D. Add the following after the first sentence: Specified method shall be Method N/A.

T-834 DRAINAGE STRUCTURE MAINTENANCE (2/02)

834.01 Description

This work consists of cleaning and reconditioning culverts and other drainage structures.

834.02 Maintenance Requirements

A. Clean drainage structures, inlet structures, culverts, catch basins, and outlet channels specified in the SPECIAL PROJECT SPECIFICATIONS. Clean catch basins by removing the material within the area SHOWN ON THE DRAWINGS.

B. Clean the transition from the ditch line to the catch basin a distance of 3 meters (10 feet) from the catch basin. Clean outlet channels and lead-off ditches a distance of 2 meters (6 feet). Remove and place debris and vegetation so as to not enter the channel or ditch, or obstruct traffic. Haul debris and vegetation to a designated disposal area in accordance with Section T-832.

C. Hydraulic flushing of drainage structures is not allowed unless provided for in SPECIAL PROJECT SPECIFICATIONS.

D. Cleaning and reconditioning are limited to the first 1 meter (3 feet) of inlet and outlet, determined along the top of the structure. Recondition culvert inlet and outlet by field methods such as jacking out or cutting away damaged metal which obstructs flow. Treat cut edges with a zinc rich coating, complying with subsection 707.15 of Forest Service Standard Specifications for Construction of Roads and Bridges.

SPECIAL PROJECT SPECIFICATION (6/03)
T-834-01F
DRAINAGE STRUCTURE MAINTENANCE

834.02 Maintenance Requirements

A. Delete the words "specified in the SPECIAL PROJECT SPECIFICATIONS" and substitute the following: on those roads listed in C(T)5.31# Road Maintenance Requirements.

TYPICAL SECTION OF CATCH BASINS AND TRANSITION AREAS

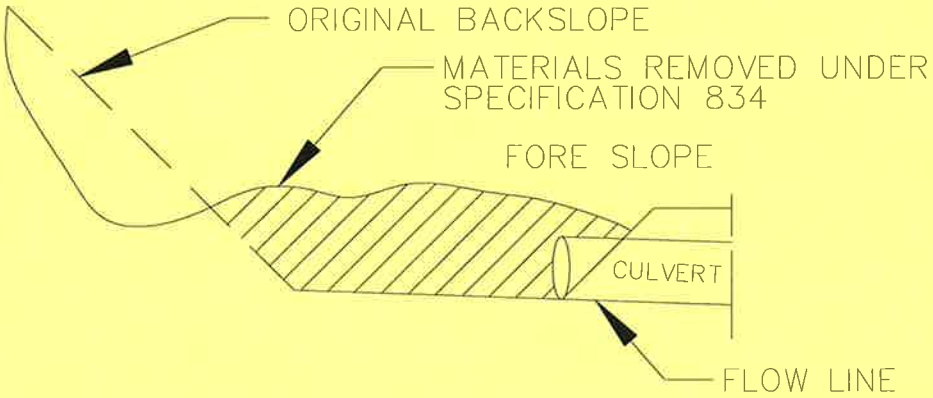

CROSS SECTION VIEW

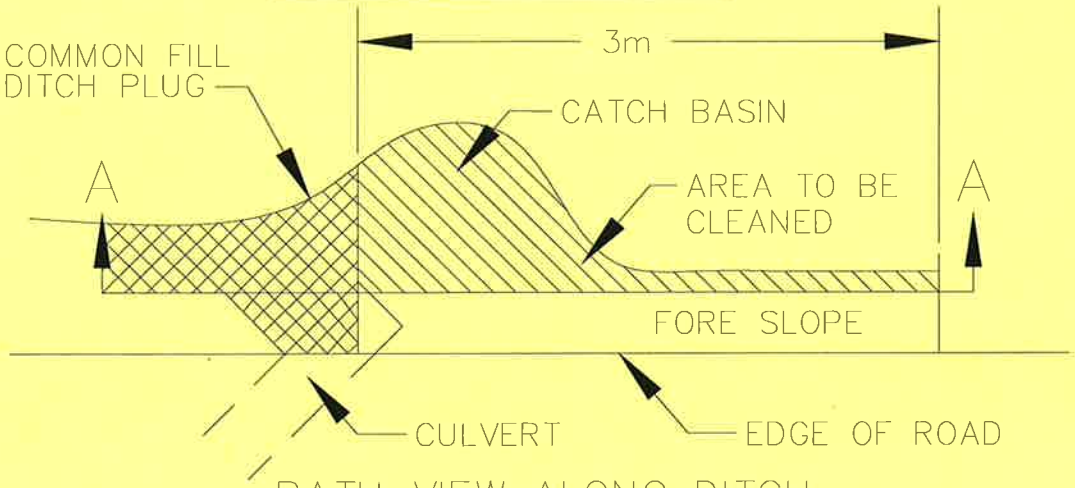

PATH VIEW ALONG DITCH

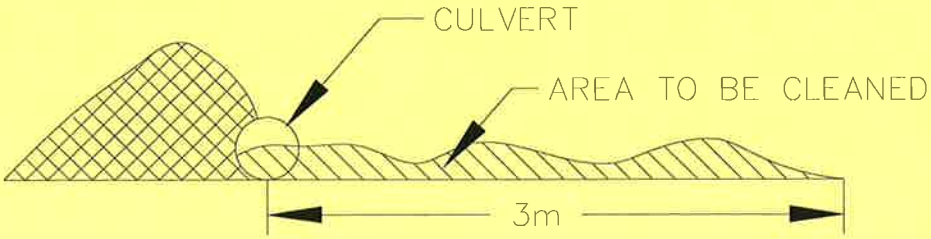

SECTION A – A

TITLE	CLEANING OF DITCH RELIEF CATCH BASIN AND TRANSITION	
DRAWING 834–1	APPROVED	

T-838 MAINTENANCE FOR HIGH CLEARANCE VEHICLE USE (2/02)

838.01 Description

This work consists of making limited use roads passable for project use by Purchaser and providing drainage from the traveled way and roadbed.

838.02 Maintenance Requirements

A. Traveled Way

Purchaser may smooth or fill existing cross ditches and waterbars and by agreement modify existing road junction to enable vehicle access. Prior to beginning haul and resumption of haul after an extended stoppage:

1. Remove brush, fallen trees, rocks, and other debris from traveled way, including turnouts, turnarounds, and other locations that interfere with needed maintenance as follows:

a. No object extending over 100 mm (4 inches) above the road surface shall remain within the 3.6 m (12 feet) usable traveled way. Center the usable width on the roadbed or position away from the fill slope.

b. Cut and remove standing or down trees, logs, brush, and limbs from within the area described in 1(a). Remove encroaching limbs to a height of 4.2 m (14 feet) above the traveled way surface. Scatter material not meeting utilization standards outside and below the roadbed on the fill side. Limb and remove timber which, meets utilization standards or deck at agreed locations.

c. Place all removed materials away from drainage's.

d. During use, maintain drainage structures including dips, ditches and culverts in a usable condition.

2. Clean and recondition drainage facilities in accordance with Section T-831 and T-834.

B. Slough and Slides

1. Slough and slides may be left in place, provided surface drainage is provided and at least 3.6 m (12 feet) of width is available for vehicle passage.

2. Purchaser may reposition or ramp over slides and slough when the traveled way is less than 3.6 m (12 feet) providing the material is capable of supporting vehicles. Limit outslope to no more than six percent.

3. Reposition slough or slide materials, which are not capable of supporting a vehicle, on the roadbed to provide the 3.6 m (12 feet) width. When directed by Forest Service, slough or slide material will be removed under Section T-832.

C. Slumps and Washouts

1. Drain the roadbed immediately upgrade of slumps and longitudinal cracks to prevent water from entering slump area.

2. Slumps and longitudinal cracks at the edge of the roadbed shall not be considered a part of the usable width. Usable width may be reduced to 3 m (10 feet) in the area of the slump.

3. Unless Forest Service agrees to material being placed on slumps, ramp the slumps on both ends into undisturbed roadbed to provide at least 3 m (10 feet) usable width. Use removed materials to guide vehicles to the ramp location or to aid in draining the area.

4. Washouts may be filled with suitable material.

D. Posthaul

At the end of hauling or prior to entering into seasonal shutdowns or a period of extended inactivity:

1. Shape the traveled way and disturbed roadbed to provide functional drainage.

2. Reinstall removed cross ditches and waterbars and provide any additional drainage structures necessary to offset changes caused through use and maintenance.

3. Leave roads useable for high clearance vehicles. Remove or reshape purchaser modifications at road junctions to leave the entrance as it was before use, or as agreed at the time of improvement.

839 MAINTENANCE FOR PROJECT USE (05/07)

839.01 Description

Work consists of providing minimum access required for Purchaser's Operations and associated Forest Service contract administration and preventing unacceptable resource or road damage.

839.02 Maintenance Requirements

A. Purchaser is authorized to perform the following maintenance to provide vehicle passage and drainage:

1. Removing log, earth, and rock barriers and/or improving existing road junctions to enable vehicle access as mutually agreed.

2. Smoothing or filling existing cross ditches and water bars.

3. Installing Purchaser-furnished culverts or other temporary drainage structures for shallow stream crossings as approved by the Contracting Officer.

4. Removing brush, fallen trees, rocks, and other materials from the traveled way and other locations that interfere with needed maintenance:

   a. Place all removed materials away from drainages.

   b. Limb and remove timber which meets utilization standards or deck at _locations approved by the Contracting Officer. Scatter other woody materials, including limbs, off of and below the roadbed without creating concentrations.

5. Clean and recondition drainage structures in accordance with Section T-831 and Section T-834.

6. Reposition or ramp over slough and slides to provide adequate width of traveled way material.

7. Provide traveled way drainage above slumps and seal cracks in slump area. Ramp the slumps on both ends into undisturbed roadbed to provide usable width unless otherwise ordered by the Contracting Officer.

B. During use, the traveled way shall not channel water along the road. Prior to seasonal periods of anticipated rains and runoff, perform the following work:

1. Shape the traveled way and roadbed to drain.

2. Reinstall removed cross ditches and water bars and provide any additional drainage structures necessary to offset changes through use and maintenance.

3. Perform work outlined in 839.02 A (5), (6), and (7).

4. During periods of non use, replace original barrier or provide and maintain standard MUTCD, Type 3, barricades unless alternate type barriers are approved by the Contracting Officer.

839.03 Post Haul Requirements

A. Upon completion of project use perform such work as needed to reasonably conform to the character of the existing road prior to Purchaser's maintenance for project use, unless otherwise provided in the SUPPLEMENTAL SPECIFICATIONS or the Road Listing. Work shall be in addition to requirements of 839.02 B and in accordance with 839.03 B and C.

B. Roads designated in the Road Listing to be blocked shall conform to the requirements of Section T-835. Unless otherwise approved by the Contracting Officer, remove Purchaser-installed temporary structures from National Forest System land. Associated commercially-obtained materials shall remain the property of the Purchaser.

C. Remove or reshape Purchaser improvements at road junctions, as approved by the Contracting Officer at the time of improvement.

T-851 LOGGING OUT (2/02)

851.01 Description

This work consists of removal of fallen trees and snags which encroach into the roadway or the one (1) meter (3 feet) roadside abutting the roadway on the cut side.

851.02 Maintenance Requirements

A. Limb and remove timber which meets Utilization Standards, or deck at agreed locations.

B. Limb other material cut into lengths for handling. Deck outside ditches and drainage's, off the traveled way and turnouts or at staked locations. The clearing width is to the edge of the roadway for public use roads, except limited use roads. The clearing width for limited use roads is shown in the specifications.

C. Notwithstanding B(T)2.3, blowdown timber outside Sale Area required to be removed, which meets Utilization Standards in A(T)2, when agreed is Included Timber subject to requirements of B(T)2.2.

D. Do not leave woody debris and slash in excess of 300 mm (12 inches) in length or 75 mm (3 inches) in diameter, or concentrations which may plug ditches or culverts, in ditches, drainage channels, or on backslopes, traveled way, shoulders, or turnouts.

T-854 – TREATMENT AND DISPOSAL OF DANGER TREES(9/03)

854.01 Description

This work consists of treatment and disposal of marked live or dead danger trees sufficiently tall to reach roads used by the Purchaser. Any removal of logs is subject to prior agreement between the Forest Service and the Purchaser.

854.02 Requirements

A. Designation of danger trees.

Danger trees to be felled will be marked in advance by the Forest Service.

B. Falling, bucking and treatment for disposal.

Fall trees with hand operated saws unless otherwise agreed . Use controlled felling to ensure the direction of fall and prevent damage to property, structures, residual trees, and traffic. Stump heights, measured on the side adjacent to the highest ground, must not exceed 12 inches (300 mm), or 1/3 of the stump diameter, whichever is greater. Higher stump heights are permitted when necessary for safety.

Felled snags and trees will be left in a stable condition such that they will not roll or slide.

Remove or treat trees designated for removal that equal or exceed the utilization standards as listed in the Timber Sale contract or Special Project Specifications. Dispose of merchantable timber designated for removal in accordance with B/BT2.32 Construction Clearing, of the Timber Sale Contract, or as described in Special Project Specifications.

C. Slash treatment.

Remove limbs, chunks, and debris within the roadway in excess of 12 inches (300 mm) in length and 3 inches (75 mm) in diameter, and concentrations that may plug ditches or culverts, from the traveled way, shoulders, ditches, and water courses.

Dispose of slash by scattering outside the roadway limits without damaging trees. Limb all logs. Position logs away from trees, positioned so they will not roll, and are not on top of one another. Limb and scatter other slash to reduce slash concentrations.

Large accumulations of slash may be ordered hauled under T-832.

T-891 WATER SUPPLY AND WATERING (2/02)

891.01 Description

This work consists of providing facilities to furnish an adequate water supply, hauling and applying water.

891.02 Materials

If the Purchaser elects to provide water from other than designated sources, the Purchaser is responsible to obtain the right to use the water, including any cost for royalties involved. Suitable and adequate water sources designated available for Purchaser's use under this contract are as follows:

Map Key No.	Location Road	Location Milepost	Use Restrictions

891.03 Equipment

A. Positive control of water application is required. Equipment shall provide uniform application of water without ponding or washing.

B. An air gap or positive anti-siphon device shall be provided between the water source and the vehicle being loaded if the vehicle has been used for other than water haul, if the source is a domestic potable water supply, or the water is used for tank mixing with any other materials.

C. The designated water sources may require some work prior to their use. Such work may include cleaning ponded areas, installing temporary weirs or sandbags, pipe repair, pump installation, or other items appropriate to the Contractor's operations. Flowing streams may be temporarily sandbagged or a weir placed to pond water, provided a minimum flow of **N/A** cu.m/s (cu. ft/sec) is maintained. Obtain approval on improvements for sandbags or weirs prior to placement.

SPECIAL PROJECT SPECIFICATION (6/03)
T-891-01F
WATER SUPPLY AND WATERING

891.03 Equipment

C. Delete the word "Contractor" in the second sentence and substitute the following: Purchaser.

D. Add the following: Watering, juvenile fish protection. All draft hoses being used to withdraw water from any live flowing stream or pond located at various locations in Region Six, the Purchaser shall utilize (1) one of the following methods of screening on any draft hoses used. These roads are listed in C(T)5.31# Road Maintenance Requirements.

(1) Perforated Plate: Screen openings shall not exceed 3/32 or 0.0938-inches (2.38 mm).

(2) Profile Bar Screen: The narrowest dimension in the screen openings shall not exceed 0.0689-inches (1.75-mm).

(3) Woven Wire Screen: Screen openings shall not exceed 3/32 or 0.0938-inches (2.38 mm).

All screening methods shall be cleaned frequently either with wire brushing, flushing, or any other acceptable method.