EARTHEN BARRICADE DETAIL

Drawing #EB-2

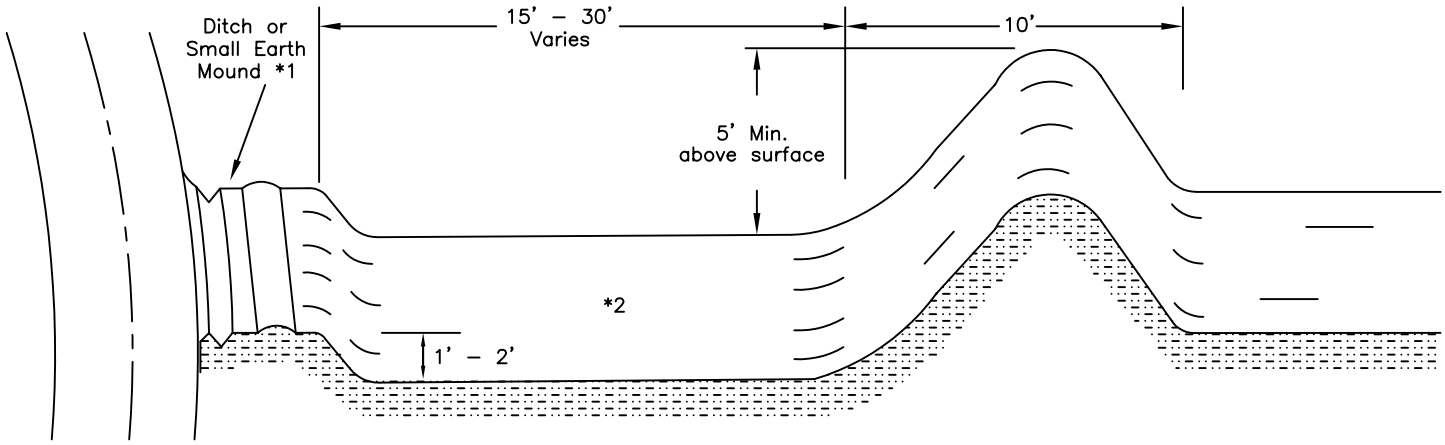

ISOMETRIC VIEW

ISOMETRIC VIEW

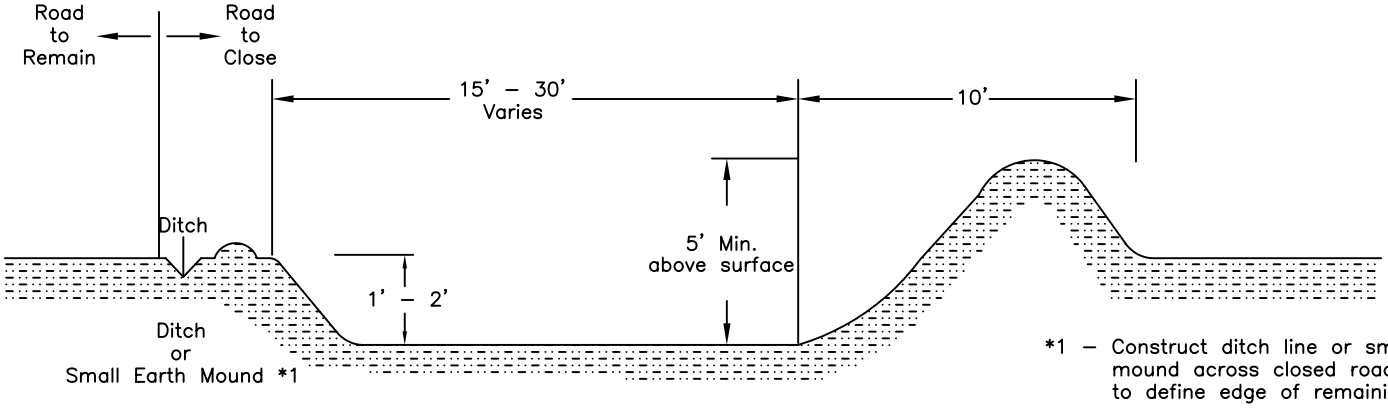

*1 – Construct ditch line or small earth mound across closed road entrance to define edge of remaining road.

*2 – Slope Excavation area to drain

PROFILE VIEW

PROFILE VIEW