U.S. DEPARTMENT OF AGRICULTURE FOREST SERVICE **INTEGRATED RESOURCE TIMBER CONTRACT** (Applicable to Contracts with Measurement after Harvest)		**Name of Contractor**	
National Forest Mt. Hood	**Ranger District** Hood River	**Region** Pacific N-West	**Contract Number**
Contract Name Keep STEW DxP		**Award Date**	**Termination Date** 12/31/2024

The parties to this contract are The United States of America, acting through the Forest Service, United States Department of Agriculture, hereinafter called Forest Service, and 1/ _____ hereinafter called Contractor.

Unless provided otherwise herein, Forest Service agrees to sell and permit Contractor to cut and remove Included Timber and Contractor agrees to purchase, cut, and remove Included Timber and complete required stewardship projects.

IN WITNESS WHEREOF, the parties hereto have executed this contract as of the award date.

UNITED STATES OF AMERICA

Two Witnesses: 2/

By: _____
Contracting Officer

_____
(Name)

_____
(Title)

_____
(Address)

_____
(Contractor) 3/

_____
(Name)

By: _____

_____
(Address)

_____
(Title)

_____
(Business Address)

I, 4/ _____ , certify that I am the _____
Secretary of the corporation named as Contractor herein; that _____
who signed this contract on behalf of Contractor, was then _____
of the corporation; that the contract was duly signed for and in behalf of the corporation by authority of its governing body, and is within the scope of its corporate powers.

_____

CORPORATE SEAL 5/

INSTRUCTIONS:

1/ If Contractor is a corporation, state a "corporation organized and existing under the laws of the State of _____" and specify the State; if Contractor is a Limited Liability Company, state a "Limited Liability Company organized and existing under the laws of the State of _____" and specify the state; if Contractor is a partnership, state a "partnership consisting of _____" and specify the names of each partner; and if Contractor is a sole proprietor doing business under an assumed name, state "(n) individual doing business under the name of _____ City of _____, State of _____."

2/ The signatures and addresses of two witnesses are required if Contractor is other than a corporation.

3/ If Contractor is a co-partnership, the signatures should be: XYZ Company, by John Doe, a member of the firm. If Contractor is a corporation, form of signature should be: XYZ Company, by John Doe, President (or other officer or agent) and the seal of the corporation must be impressed or indicated.

4/ The certificate must be completed if Contractor is a corporation.

5/ For companies incorporated in States that require a corporation seal, if the corporation has no corporate seal that fact shall be stated, in which case a scroll or adhesive seal shall follow the corporate name.

A - SPECIFIC CONDITIONS. The following conditions apply to the indicated portions.

A1 - Location and Area, applicable to B1.1

This Contract Area of 2044 acres more or less is located in: Section 32, T.1S., R.10E.; Sections 3, 4, 5, 7, 8, 9, 10, T.2S., R. 10E., W.M., Surveyed, Hood River County, OR

A2 - Volume Estimate and Utilization Standards, applicable to B2.1, B2.2, B2.4, and B6.4

Species	Product	Estimated Quantity	Unit of Measure	Minimum Specifications				
				Merchantable Tree		Piece Required to be Removed		
				Diameter Breast High (d.b.h.) (inches)	Number of Minimum Pieces per Tree	Length (feet)	Diameter Inside Bark at Small End (inches)	Merch. Factor or Net Scale% Gro
Grand Fir and Other Coniferous Species	Sawtimber	32,565.00	Ton	8.0	1	8	6.0	40
Grand Fir and Other Coniferous Species	Grn Bio Cv	4,478.00	Ton	5.0	1	8	4.0	N/A
Timber Subject to Agreement under C2.11#								
All Coniferous Species	Grn Bio Cv	unestimated	Ton	2.0	1	2	1.0	N/A
Total Quantity		37,043.00	Ton					

1/ Enter Merchantability Factor (Merch. Factor) or Net Scale in % of Gross Scale, whichever is appropriate.

A3- Timber Designations, applicable to B2.3; acres are approximate:

	Number	Acres
Clearcutting Units (B2.31)		
Specified Road Clearing (B2.32)		
Overstory Removal Units (B2.33)		
Understory Removal Units (B2.34)		
Individual Trees (B2.35)		496
Incompletely Marked Timber (B2.36)		

A4 - Timber Payment Rates, applicable to B3.1 and B4.0

A4a - Escalated Rates, applicable for Species and Products to be Paid for at Rates Escalated under B3.2

Species	Product	Unit of Measure	Rates per Unit of Measure					Base Index
			Base $	Advertised $	Bid Premium $	Bid (Tentative) $	Required Deposits Slash Disposal $	
Not Applicable								

A4b - Flat Rates, applicable for Species and Products to be Paid for at Flat Rates

Species	Product	Unit of Measure	Rates per Unit of Measure				
			Base $	Advertised $	Bid Premium $	Bid (Flat) $	Required Deposits Slash Disposal $
Grand Fir and Other Coniferous Species	Sawtimber	Ton	N/A	11.63			1.70
Grand Fir and Other Coniferous Species	Grn Bio Cv	Ton	N/A	11.63			1.70
Timber Subject to Agreement under C2.11#							
All Coniferous Species	Grn Bio Cv	Ton	N/A				

For purposes of convenience in collection and bookkeeping, Bid Rates stated in A4 include payment of deposits for contract area betterment required pursuant to 16 USC 576b. Such deposits are not included as Required Deposits defined hereunder.

A4c - Stewardship Rates and Credits, applicable to B3.1, B4.5 and C6.9#

Mandatory Stewardship Projects					
Project Number	**Project Description**	**Units of Measure**	**Quantity**	**Bid Rate $**	**Total Credits**
001	Leave Tree Marking	Acres	496.00		
002	Reduce Fuel Loading	Acres	496.00		

Optional Stewardship Projects						
Priority	**Project Number**	**Project Description**	**Units of Measure**	**Quantity**	**Bid Rate $**	**Total Credits**
		Not Applicable				

The following definitions are established for the terms used in A4:

Base Rates are the lowest rates of payment for timber that are authorized by this contract. Base Rates remain constant throughout the life of this contract and are not subject to change by rate redetermination, except for reduction under B3.31, B3.32, or B3.33.

Advertised Rates are the minimum acceptable Bid Rates for timber, exclusive of Required Deposits. These rates are those indicated by appraisal, with a cost allowance made for construction of Specified Roads listed in A7, but are never less than Base Rates.

Bid Premium Rates are the amounts by which Contractor's bid is in excess of Advertised Rates. The Bid Premium Rates are constant during this contract, except as provided in B3.31, B3.32, and B3.33.

Bid Rates are the rates bid by Contractor (exclusive of Required Deposits for slash disposal, road maintenance, and contract scaling) and are the sum of Advertised Rates and Bid Premium Rates. Until a rate redetermination becomes effective, the Bid Rate for species and products in A4a is the Tentative Rate that is subject to quarterly adjustment under B3.2; for species and products in A4b, the Bid Rate is the Flat Rate.

Required Deposits are deposits that Contractor may be required to pay for slash disposal (16 USC 490), road maintenance (16 USC 537), and contract scaling (1994 Appropriations Act). Required Deposits may be adjusted as part of a rate redetermination or a Contract Term Extension. The table shows only Required Deposits for slash disposal; road maintenance deposits, if any, are given in C5.32#; and contract scaling deposits, if any, are given in C6.816#.

Base Index is the specified average of the lumber or other product selling value index used as the basis for computing adjustment in rates for variance in product selling value, as provided in B3.2.

A5 - Indices Used in Quarterly Adjustment, applicable to B3.2

Species	Index Name and Date
Not Applicable	

A6 - High Stumps, applicable to B6.412

Species	Product	Maximum Stump Height * (inches)
All	All	12

* 12 inches, or 1/3 stump diameter, whichver is greater, with the exception within 660 feet of a trail shown on Contract Area Map the maximum stump height is 6 inches or less.

A7 - Specified Roads, applicable to B5.2

Name and Date of Governing Road Specifications: FP-14 Federal Highway Administration Standard Specifications for Construction of Roads and Bridges on Federal Highway Projects, as amended and supplemented (English)

Project		Design Class	Appro. Length (mi./km.)	Sheet Numbers and Approval Date	Performance Responsibility		
Road No.	Name				Survey	Design	Construction Staking 1/
4400 000	4400 000 (R) (segment 0 to 3.67)	Double Lane - 35 mph	3.67 / 5.91	1-8 06/22/2020	FS	FS	FS BC
4400 620	4400 620 (R) (segment 0 to .52)	Double Lane - 25 mph	.52 / .84	1-8 06/22/2020	FS	FS	FS BC

1/ Indicate timing, i.e., before clearing (BC) or after clearing (AC). Applicable to B5.212.

A8 - Forest Service Engineering Completion Schedule, applicable to B5.21

Road No.	Road Name	Type of Work	Completion Date
	Not Applicable		

A9 - Scaling Instructions and Specifications, applicable to B6.8

Name and Date of Governing Instructions: FSH 2409.11, National Forest Log Scaling Handbook, as amended and supplemented. Check scaling will be performed at individual scaling locations.

Scaling Specifications					
			Trim Allowance		
Species	Product	Maximum Scaling Length (feet)	Diameter Range (inches)	Length Range (feet)	Trim Allowance (inches)
Grand Fir and Other Coniferous Species	All	0	0-00	0-00	6

A10 - Scaling Services, applicable to B6.81

Species	Product	Unit of Measure	Site and Geographic Location	Method	Standard Estimated Cost per Unit $
Grand Fir and Other Coniferous Species	All	Ton	Contractor shall request an alternate scaling site per B6.811 and enter into a "Weighing Service Agreement" as per C6.8	Total (100%) Weight Scale	.00

A11 - Minimum Scaling Volumes, applicable to B6.81

Minimum volume for Continuous Scaling Services in two-week period N/A Ton per scaler

Minimum volume for Intermittent Scaling Services N/A Ton on a N/A basis

A12 - Fire Precautionary Period, applicable to B7.2

April 01 to October 31 , inclusive

A13 - Contractor's Responsibility to Furnish Crews and Equipment for:

Initial Fire Suppression, applicable to B7.3

Within 5 road miles

Fire Suppression Reinforcement, applicable to B7.312 and B7.313

Within 100 road miles

A14 - Contractor's Obligation per Operations Fire, applicable to B7.41

Maximum Amount: $ $300,000.00

A15 - Termination Date, applicable to B8.2

December 31, 2024

A16 - Normal Operating Season, applicable to B6.31, B6.66, B8.21 and B9.3

First Period: June 01 to October 31 , inclusive

Second Period: _____ to _____ , inclusive

A17 - Performance Bond Amount, applicable to B9.1

Performance Bond Amount: _____

A18 - Downpayment, applicable to B4.211

Downpayment Amount: Not Applicable

A19 - Periodic Payment Amount, applicable to B4.213

	Periodic Payment Determination Date	Amount
Initial Payment:	N/A	N/A
Additional Payment:	N/A	N/A

A20 - Market-Related Contract Term Addition Producer Price Index, applicable to B8.212

Index Name: Softwood Lumber **Index Number:** 0811

A21 - Inapplicable Provisions

The following listed provisions - are hereby made inapplicable. (Instructions: List by reference number and title.)

B4.4	PAYMENTS NOT RECEIVED
B8.21	CONTRACT TERM ADJUSTMENT
B8.212	MARKET-RELATED CONTRACT TERM ADDITION
B8.64	DEBARMENT AND SUSPENSION CERTIFICATION

A22 - List of Special Provisions in Division C

The following listed special provisions are attached to and made a part of this contract. Provisions with reference numbers followed by # contain blanks into which data have been entered for this contract. (Instructions: List by reference number, title, and date.)

C2.11#	TIMBER SUBJECT TO AGREEMENT (09/2004)
C2.355#	DESIGNATION BY PRESCRIPTION (05/2015)
C3.47#	ABNORMAL DELAY (05/2005)
C4.22	CHANGES IN STEWARDSHIP CREDITS (06/2008)
C4.4	PAYMENTS NOT RECEIVED (08/2012)
C5.1#	TEMPORARY ROAD AND LANDING CONSTRUCTION (OPTION 1) (06/2010)
C5.12#	USE OF ROADS BY CONTRACTOR (09/2004)
C5.13#	ROAD COMPLETION DATE (09/2004)
C5.213#	DEPOSIT FOR RECONSTRUCTION ENGINEERING SERVICES (01/2020)
C5.221#	MATERIAL SOURCES (09/2004)
C5.31#	ROAD MAINTENANCE REQUIREMENTS (09/2004)
C5.32#	ROAD MAINTENANCE DEPOSIT SCHEDULE (08/2012)
C6.315#	PROJECT OPERATION SCHEDULE (05/2005)
C6.405	ALTERNATE REMOVAL OF INCLUDED TIMBER (05/2005)
C6.41#	SPECIFIC REQUIREMENTS (05/2005)
C6.42#	YARDING/SKIDDING REQUIREMENTS (05/2005)
C6.6#	EROSION CONTROL AND SOIL TREATMENT BY CONTRACTOR (03/2017)
C6.7	SLASH DISPOSAL (03/2017)
C6.74# (Option 2)	SLASH TREATMENT REQUIREMENTS (06/2008)
C6.815	THIRD PARTY SCALING SERVICES (09/2004)
C6.842 (Option 1)	USE OF PAINT BY CONTRACTOR (06/2006)
C6.851	WEIGHT OF LOST LOADS (04/2014)
C6.9#	STEWARDSHIP PROJECTS (09/2004)
C7.1	PLANS (05/2005)
C7.11	ADDITIONAL AREA OF FIRE RESPONSIBILITY (05/2005)
C7.2	SPECIFIC FIRE PRECAUTIONS (05/2005)
C7.201	BURNING BY CONTRACTOR (06/2006)
C7.22	EMERGENCY FIRE PRECAUTIONS (06/2018)
C8.10	DISCLAIMER OF EXPRESSED OR IMPLIED WARRANTY (05/2005)
C8.21	CONTRACT TERM ADJUSTMENT (07/2016)
C8.212	MARKET-RELATED CONTRACT TERM ADDITION (11/2008)
C8.3#	CONTRACT CHANGES (OPTION1) (05/2005)
C8.64	DEBARMENT AND SUSPENSION CERTIFICATION (03/2018)
C8.66# (Option 1)	USE OF TIMBER (09/2004)

UNITED STATES DEPARTMENT OF AGRICULTURE
Forest Service

INTEGRATED RESOURCE TIMBER CONTRACT

(Sale of Property Contract, 36 CFR 223.301)
DIVISION B

October 2019
(Date of Issue)

PROVISIONS FOR MEASUREMENT OF PRODUCTS AFTER HARVEST

This contract is organized into Parts, Sections, Subsections, and Items. These are numbered in accordance with the following scheme: Part B1.0, Section B1.1, Subsection B1.11, and Item B1.111. References to a Part include all Sections, Subsections, and Items within that Part; references to a Section include all Subsections and Items within that Section; and references to a Subsection include all Items within that Subsection. Cross-references within this contract cite the reference number of the applicable Part, Section, Subsection, and Item. Descriptive headings used are not to be considered in determining the rights and obligations of the parties.

The Standard Provisions in this Division are subject to Specific Conditions Division A. Wherever appropriate, Specific Conditions established in Division A are cited by reference number. The listing of Sections, Subsections, or Items of this Division in A21 has the effect of striking or deleting them from Division B. A22 lists Special Provisions that comprise Division C. Where appropriate, references to Special Provisions are made by citing the applicable reference numbers.

INDEX TO TERMS

Term	Reference	Term	Reference
Advertised Rates	A4	Integrated Resource Account	B4.2
Base Index	A4	Intermittent Scaling Services	B6.81
Base Rates	A4	Marked	B2.35
Bid Premium Rates	A4	Negligent Fire	B7.42
Bid Rates	A4	Normal Operating Season	B6.31
Catastrophic Damage (Timber)	B2.133	Off-Road Equipment	B6.35
Claim	B9.2	Operations Fire	B7.41
Clearcutting Units	B2.31	Out-of-Pocket Expenses	B8.35
Construct	B5.1	Overstory Removal Units	B2.33
Continuous Scaling Services	B6.81	Plans	B5.211
Contract Area	B1.0	Required Deposits	A4
Contract Area Map	B1.1	Scaling	B6.8
Contract Term Adjustment	B8.21	Schedule of Items	B5.2
Contract Term Extension	B8.23	Shop Drawings	B5.211
Contractor's Operations	B6.3	Specified Roads	B5.2
Current Contract Rates	B3.1	Stewardship Credits	B4.5
Current Contract Value	B3.1	Streamcourses	B6.5
Current Unit Rates	B5.251	Subcontractor	B8.64
Design Change	B5.253	Substantially Completed	B5.23
Excess Timber Value	B4.53	Technical Proposal	B6.311
Extended Scaling Services	B6.81	Temporary Roads	B5.1
Extension Deposit	B4.217	Tentative Rate	B3.1
Fire Precautionary Period	B7.2	Termination Date	B8.2
Flat Rates	B3.1	Understory Removal Units	B2.34
Included Timber	B2.1	Unrecovered Expenditure	B8.35
Indicated Advertised Rates	B8.221	Utilization Standards	A2, B2.2
		Weighing Services Agreement	B6.814

CONTENTS

Reference Number	Title	Page
B1.0	**CONTRACT AREA**	**114**
B1.1	Contract Area Map	114
B1.2	Claims	114
B2.0	**TIMBER SPECIFICATIONS**	**114**
B2.1	Included Timber	114
B2.11	Standard Timber	114
B2.12	Substandard Timber	114
B2.13	Damaged Timber	114
B2.131	Damaged by Contractor	114
B2.132	Negligent or Willful Damage	114
B2.133	Damage by Catastrophe	114
B2.134	Minor Damage by Natural Causes	115
B2.14	Unintentionally Cut Timber	115
B2.15	Construction Timber	115
B2.16	Other Material	115
B2.2	Utilization and Removal of Included Timber	115
B2.3	Timber Designations	115
B2.31	Clearcutting Units	115
B2.32	Construction Clearing	115
B2.33	Overstory Removal Units	115
B2.34	Understory Removal Units	115
B2.35	Individual Trees	115
B2.36	Incompletely Marked Timber	115
B2.37	Minor Changes	115
B2.4	Volume Estimate	115
B2.41	Adjustment for Volume Deficit	115
B2.42	Adjustment for Excess Volume	116
B3.0	**RATES OF PAYMENT**	**116**
B3.1	Current Contract Rates	116
B3.2	Escalation Procedure	116
B3.21	Unavailable Index	116
B3.3	Rate Redetermination	116
B3.31	Rate Redetermination for Environmental Modification	117
B3.32	Rate Redetermination after Catastrophic Damage	117
B3.33	Rate Redetermination for Market Change	117
B3.34	Emergency Rate Redetermination	117
B3.4	Other Payment Rates	117
B3.41	Material Not in A2	117
B3.42	Timber Cut Through Mistake	117
B3.43	Designated Timber Cut But Not Removed	118
B3.44	Undesignated Timber Damaged Without Negligence	118
B3.45	Undesignated Timber Unnecessarily Damaged or Negligently or Willfully Cut	118
B3.46	Liquidated Damages	118
B3.47	Defect Caused by Abnormal Delay	118
B4.0	**PAYMENT**	**118**
B4.1	Amount Payable for Timber	118
B4.2	Integrated Resource Account	118
B4.21	Cash Deposits	118
B4.211	Downpayment	118
B4.212	Advanced Deposits	118
B4.213	Periodic Payment Schedule	119
B4.214	Deposits for Charges Subject to Escalation	119
B4.215	Deposits When Payment Guaranteed	119
B4.216	Blanket Cash Deposits	119
B4.217	Extension Deposits	119
B4.218	Cooperative Deposits	119
B4.22	Temporary Reduction of Downpayment	119
B4.23	Refund of Excess Cash	119
B4.24	Refund after Scaling Completed	120
B4.3	Payment Guaranteed by Bond or Deposited Securities	120
B4.31	Blanket Bond	120
B4.32	Letters of Credit for Payment Bond	120
B4.4	Payments Not Received	120
B4.5	Stewardship Credits	121
B4.51	Progress Estimates	121
B4.52	Excess Stewardship Credits	121
B4.53	Excess Timber Value	121
B4.54	Cash Payment for Stewardship Projects	121
B4.55	Refund of Unused Stewardship Credits	121
B5.0	**TRANSPORTATION FACILITIES**	**121**
B5.1	Authorization	121
B5.11	Requirements of Rights-of-Way	121
B5.12	Use of Roads by Contractor	121
B5.2	Specified Roads	121
B5.21	Engineering	122
B5.211	Contract Plans	122
B5.212	Construction Staking	123
B5.22	Material Delivery	123
B5.23	Use of Partially Constructed Roads	123
B5.24	Estimated Cost	123
B5.25	Construction Cost Adjustment	123
B5.251	Variation in Quantities	123
B5.252	Physical Change	124
B5.253	Design Change	124
B5.26	Alternate Facilities	125
B5.27	Temporary Credit for Unamortized Specified Road Construction Cost	125
B5.3	Road Maintenance	125
B5.4	Use by Others	125
B6.0	**OPERATIONS**	**126**
B6.1	Representatives	126
B6.11	Notices	126
B6.2	Improvements	126
B6.21	Removal	126
B6.22	Protection of Improvements	126

Reference Number	Title	Page
B6.221	Protection of Improvements Not Owned by Forest Service	127 127
B6.222	Protection of Property	127
B6.23	Protection of Land Survey Monuments	127
B6.24	Protection Measures Needed for Plants, Animals, Cultural Resources, and Cave Resources	127
B6.3	Control of Operations	128
B6.31	Operating Schedule	128
B6.311	Inclusion of Technical Proposal	128
B6.312	Plan of Operations for Road Construction	128
B6.32	Protection of Residual Trees	128
B6.33	Safety	128
B6.34	Sanitation and Servicing	129
B6.341	Prevention of Oil Spills	129
B6.342	Hazardous Substances	129
B6.35	Equipment Cleaning	129
B6.36	Acceptance of Work	130
B6.361	Acceptance of Specified Roads	130
B6.4	Conduct of Logging	130
B6.41	Felling and Bucking	130
B6.411	Felling in Clearings	130
B6.412	Stump Heights	130
B6.413	Bucking Lengths	130
B6.414	Limbing	130
B6.42	Skidding and Yarding	130
B6.421	Rigging	131
B6.422	Landings and Skid Trails	131
B6.423	Skidding on Roads	131
B6.424	Arches and Dozer Blades	131
B6.5	Streamcourse Protection	131
B6.6	Erosion Prevention and Control	131
B6.61	Meadow Protection	131
B6.62	Wetlands Protection	131
B6.63	Temporary Roads	131
B6.631	Temporary Roads to Remain Open	131
B6.64	Landings	132
B6.65	Skid Trails and Fire Lines	132
B6.66	Current Operating Areas	132
B6.67	Erosion Control Structure Maintenance	132
B6.7	Slash Disposal	132
B6.8	Scaling	132
B6.81	Scaling Services	132
B6.811	Scaling Locations	132
B6.812	Scaling Adjustments	132
B6.813	Delayed or Interrupted Scaling Services	133
B6.814	Weighing Services	133
B6.82	Presentation for Scaling	133
B6.83	Scaling Other Products	133
B6.84	Accountability	133
B6.841	Route of Haul	134
B6.842	Product Identification	134
B6.85	Scaling Lost Product	134
B6.851	Scaling Lost Sample Loads	134
B6.86	Scale Reports	135
B6.9	Stewardship Projects	135
B7.0	**FIRE PRECAUTIONS AND CONTROL**	**135**
B7.1	Plans	135
B7.2	Fire Precautions	135
B7.21	Substitute Precautions	135
B7.22	Emergency Precautions	135
B7.3	Fire Control	135
B7.31	Contractor's Reinforcement Obligations	135
B7.311	Suspend Operations	135
B7.312	Personnel	135
B7.313	Equipment	135
B7.4	Fire Suppression Costs	135
B7.41	Operations Fire	135
B7.42	Negligent Fire	136
B7.43	Other Fires on Contract Area	136
B7.5	State Law	136
B7.6	Performance by Contractor	136
B8.0	**OTHER CONDITIONS**	**136**
B8.1	Title and Liability	136
B8.11	Title Passage	136
B8.12	Liability for Loss	136
B8.2	Period of Contract	136
B8.21	Contract Term Adjustment	136
B8.211	Delay in Reconstruction of Processing Facilities	137
B8.212	Market-Related Contract Term Addition	137
B8.22	Termination for Catastrophe	137
B8.221	Termination by Contractor	137
B8.222	Termination by Forest Service	137
B8.23	Contract Term Extension	137
B8.3	Contract Modification	138
B8.31	Changed Conditions	138
B8.32	Modification for Catastrophe	138
B8.33	Contract Suspension and Modification	138
B8.34	Contract Termination	139
B8.35	Out-of-Pocket Expenses	139
B8.36	Termination for Market Change	140
B8.4	Performance by Other than Contractor	140
B8.5	Sale of Other Materials	140
B8.6	Provisions Required by Statute	140
B8.61	Covenant against Contingent Fees	140
B8.62	Officials Not to Benefit	140
B8.63	Nondiscrimination in Employment	140
B8.64	Debarment and Suspension Certification	141
B8.65	Contract Consistency With Other Laws	141
B9.0	**PERFORMANCE AND SETTLEMENT**	**141**
B9.1	Performance Bond	141
B9.11	Bond Reduction	141
B9.12	Letters of Credit	142
B9.13	Temporary Bond Reduction	142

Reference Number	Title	Page
B9.2	Disputes	142
B9.21	Time Limits for Submission of Claim	142
B9.22	Contract Documents	142
B9.3	Breach	143
B9.31	Termination for Breach	143
B9.4	Damages for Failure to Complete Contract or Termination for Breach	143
B9.5	Settlement	144
B9.6	Contract Closure	144

B1.0—CONTRACT AREA

B1.1 Contract Area Map. The boundaries of "Contract Area" and any subdivision thereof, are as shown on the attached "Contract Area Map" that is made a part hereof, and were, before contract advertisement, designated on the ground by Forest Service to meet the anticipated needs of the parties. The location of Contract Area and its approximate acreage are stated in A1. Subdivisions may be revised and additional ones may be established only by written agreement. Subdivisions or cutting units and stewardship project areas may be eliminated from Contract Area under conditions described in B6.36. Catastrophically Damaged areas may be removed from Contract Area under B8.32.

Where applicable, the following are also identified on Contract Area Map:

(a) Identified claims limiting Contractor's rights under B1.2;

(b) Subdivisions defined in B2.3 where timber is to be Marked after date of contract advertisement;

(c) Boundaries of Clearcutting Units, Overstory Removal Units, and Understory Removal Units under B2.3;

(d) Diameter limits for Overstory Removal Units and Understory Removal Units under B2.33 and B2.34;

(e) Areas where leave trees are Marked to be left uncut under B2.35;

(f) Specified Roads listed in A7;

(g) Sources of base course, surface rock, and rock riprap listed in the Schedule of Items;

(h) Roads where log hauling or use is prohibited or restricted under B5.12;

(i) Roads and trails to be kept open under B6.22;

(j) Improvements to be protected under B6.22;

(k) Locations of known wildlife or plant habitat and cave resources to be protected under B6.24;

(l) Locations of areas known to be infested with specific invasive species of concern under B6.35;

(m) Maximum stump heights when more than one height is listed by areas in A6 under B6.412;

(n) Skidding or yarding methods specified under B6.42;

(o) Streamcourses to be protected under B6.5;

(p) Locations of meadows requiring protection under B6.61;

(q) Locations of wetlands requiring protection under B6.62;

(r) Locations of temporary roads to be kept open under B6.631; and

(s) Other features required by Division B or C.

B1.2 Claims. Valid claims are excluded from Contract Area, except those on which timber cutting is authorized in writing by the claimant and except mining claims on which cutting is authorized by the Act of July 23, 1955 (30 USC 614). Claims that limit Contractor's rights to operate under this contract and that Forest Service has been able to identify are shown on Contract Area Map. Contractor is not obligated to operate contrary to existing claim limitations. Forest Service shall designate boundaries of claims on the ground to the extent necessary to identify Included Timber.

B2.0—TIMBER SPECIFICATIONS

B2.1 Included Timber. "Included Timber" consists of:

B2.11 Standard Timber. Live and dead trees and portions thereof that meet Utilization Standards under B2.2 and are designated for cutting under B2.3.

B2.12 Substandard Timber. Live and dead trees that:

(a) Do not meet Utilization Standards and

(b) Are located in Clearcutting Units or construction clearings or are otherwise designated for cutting.

B2.13 Damaged Timber.

B2.131 Damaged by Contractor. Undesignated live trees meeting Utilization Standards:

(a) Within 200 feet slope distance from centerline of roads constructed hereunder that are damaged by Contractor's construction to the extent that considerable deterioration or mortality is imminent and are designated by Forest Service for felling before the nearest road segment is Substantially Completed or

(b) That are damaged by Contractor in logging or stewardship project operations and are subsequently Marked before Contractor has completed work in the immediate area.

By agreement, such trees may be left without charge if their removal would cause undue damage or be grossly uneconomic.

B2.132 Negligent or Willful Damage. Undesignated timber meeting Utilization Standards and unnecessarily damaged or negligently or willfully cut by Contractor, if included by Contracting Officer.

B2.133 Damage by Catastrophe. As provided under B8.32, undesignated live and dead timber within Contract Area, meeting Utilization Standards, and affected by Catastrophic Damage. "Catastrophic Damage" as used hereunder is major change or damage to Included Timber on Contract Area, to Contract Area, to access to Contract Area, or a combination thereof:

(a) Caused by forces, or a combination of forces, beyond control of Contractor, occurring within a 12-month period, including, but not limited to, wind, flood, earthquake, landslide, fire, forest pest epidemic, or other major natural phenomenon and

(b) Affecting the value of any trees or products meeting Utilization Standards, within Contract Area and estimated to total either:

(i) More than half of the estimated timber volume stated in A2 or

(ii) More than two hundred thousand cubic feet (2,000 CCF) or equivalent.

Catastrophic Damage does not include changes caused by forest pest epidemics or foreseeable deterioration if Included Timber was sold for salvage or pest control.

B2.134 Minor Damage by Natural Causes. Undesignated trees within Contract Area and meeting Utilization Standards, in amounts less than specified in B2.133, that become insect infested, windthrown, suffer serious damage, or die, as designated by agreement.

B2.14 Unintentionally Cut Timber. Trees, within or immediately adjacent to Contract Area or to road construction or other authorized clearing outside Contract Area, not designated for cutting under B2.3 but that are cut through mistake by Contractor, when included by Contracting Officer.

B2.15 Construction Timber. Trees to be used for construction under B5.1.

B2.16 Other Material. Species or products not listed in A2, upon written approval of Contracting Officer under B3.41.

B2.2 Utilization and Removal of Included Timber. "Utilization Standards" for trees and minimum pieces are stated in A2. To meet minimum tree specifications, trees must equal or exceed tree diameters listed in A2 and contain at least one minimum piece. Except for timber required or authorized to be left, Contractor shall fell and buck such trees and shall remove from Contract Area and present for Scaling all pieces that:

(a) Meet minimum piece standards in A2 or

(b) Do not meet such standards, but would have qualified as part of minimum pieces if bucking lengths were varied to include such material.

B2.3 Timber Designations. Timber designated for cutting shall be confined to Contract Area, except as provided in B2.131, B2.14, B2.15, B2.32, and B5.1. Contract Area Map indicates subdivisions, if any, where Marking under B2.35 is to be done after contract advertisement, except for construction clearing under B2.32, minor changes under B2.37, and damaged timber.

The boundaries of Clearcutting Units, Overstory Removal Units and Understory Removal Units were plainly Marked on ground before contract advertisement and are shown on Contract Area Map. Boundary trees shall not be cut. The number of units and approximate acreage of timber designations are stated in A3.

B2.31 Clearcutting Units. All trees that meet Utilization Standards within "Clearcutting Units" are designated for cutting.

B2.32 Construction Clearing. All timber is designated for cutting that is within the clearing limits of roads constructed hereunder or is in other authorized clearings. All dead or unstable live trees are designated for cutting that are sufficiently tall to reach Contractor's landings, work areas, or the roadbed of Specified and Temporary Roads when Marked in advance of work in the immediate area. Pieces meeting Utilization Standards from such dead or unstable live trees shall be removed, unless there is agreement that to do so could damage the road. Such designation may be revised as part of agreed changes in road location under B5.2.

B2.33 Overstory Removal Units. All trees within "Overstory Removal Units" are designated for cutting when they meet Utilization Standards and equal or exceed the diameter limits shown on Contract Area Map.

B2.34 Understory Removal Units. All trees within "Understory Removal Units" are designated for cutting when they meet Utilization Standards and are smaller than the diameter limits shown on Contract Area Map.

B2.35 Individual Trees. All trees to be cut, other than in the units described in B2.31, B2.32, B2.33, and B2.34, are Marked or designated by description. Trees are "Marked" when individually designated by Forest Service with paint marks above and below stump height.

Contract Area Map indicates areas plainly identified on the ground where leave trees are Marked to be left uncut.

B2.36 Incompletely Marked Timber. Live trees within incompletely Marked subdivisions shown on Contract Area Map at time of contract advertisement shall be designated in accordance with C2.36. A representative sample of the timber to be designated has been Marked prior to contract advertisement in accordance with such rules. The approximate locations of the representative sample areas are shown on Contract Area Map.

B2.37 Minor Changes. Within Contract Area, minor adjustments may be made in boundaries of cutting units or in the timber individually Marked for cutting when acceptable to Contractor and Forest Service.

B2.4 Volume Estimate. The estimated volumes of timber by species designated for cutting under B2.3 and expected to be cut under Utilization Standards are listed in A2. If Contract Area Map indicates that there are incompletely Marked subdivisions, the objective of Forest Service shall be to designate for cutting in such subdivisions sufficient timber so that Contract Area shall yield the approximate estimated volume by species or species groups stated in A2. However, the estimated volumes stated in A2 are not to be construed as guarantees or limitations of the timber volumes to be designated for cutting under the terms of this contract.

Volume adjustments shall not be made under this Section after there is modification for Catastrophic Damage under B8.32.

B2.41 Adjustment for Volume Deficit. If Contract Area Map indicates that there are incompletely

Marked subdivisions and if Contracting Officer determines that a deficit in the estimated volume will cause the volume cut to be less than 90 percent of the total estimate shown in A2, Forest Service, upon request by Contractor, shall designate additional timber within Contract Area. Such additional timber shall be limited to that estimated to be necessary to reach approximately the estimated volumes by species listed in A2. Any such additional designation shall be consistent with land and resource management plans.

B2.42 Adjustment for Excess Volume. If Contract Area Map indicates that there are incompletely Marked subdivisions and if Contracting Officer determines that the volume cut will be more than 120 percent of the total estimated volume listed in A2, Forest Service, upon request by Contractor, shall make an adjustment in Marking or cutting unit boundaries with the objective of designating for cutting the approximate estimated volumes by species listed in A2. Such adjustments in volumes shall be confined to (a) Marking adjustments on Contract Area and (b) reduction in area to be cut over. Such adjustments or reductions shall not conflict with the silvicultural treatment being applied on Contract Area and shall not materially change the average value by species of the timber designated for cutting. Such adjustments may be made notwithstanding the provisions of B1.1 and B2.3.

If the timber designated for cutting is not reduced by such adjustments to less than 120 percent of the total estimated quantity listed in A2, Contractor, after cutting 120 percent of the total estimated volume listed in A2, may elect to have Contract Area reduced to eliminate the remaining Included Timber. However, where felling operations have been started, units of minimum practical size shall be retained in Contract Area.

B3.0—RATES OF PAYMENT

B3.1 Current Contract Rates. Included Timber that is removed by Contractor and presented for Scaling in the product form stated in A2 shall be paid for at Current Contract Rates determined under this Section. "Current Contract Rates" shall be (a) Flat Rates and (b) Tentative Rates adjusted by the escalation procedures in B3.2. Flat Rates and Tentative Rates shall be those listed in A4, unless superseded by rates redetermined under B3.3 or established for Contract Term Extension. In addition, Required Deposits shall be made as listed in A4, C5.32#, and C6.816#, or established under B3.3 or B8.23.

In the event Termination Date is adjusted under B8.21 or B8.212, Current Contract Rates shall be continued in the same manner as immediately prior to the adjustment period.

Notwithstanding B8.23, Current Contract Rates for timber cut and removed from Contract Area that remains unscaled after Termination Date, as adjusted or extended, shall be Current Contract Rates in effect on Termination Date.

"Current Contract Value" is the sum of the products of Current Contract Rates and estimated remaining unscaled volumes by species of Included Timber meeting Utilization Standards, less the bid rate for mandatory stewardship projects that have not been completed.

B3.2 Escalation Procedure. Tentative Rates for those species and products listed in A4a are subject to quarterly escalation in accordance with the following procedures: The calendar quarter index average for each price index described in A5 is the arithmetic average of the three such monthly price indices preceding January 1, April 1, July 1, and October 1. The difference between calendar quarter index average and Base Index listed in A4a shall be the basis for quarterly escalation. To arrive at Current Contract Rates for timber Scaled during the preceding calendar quarter, Tentative Rates for each species shall be reduced or increased by such difference, except when the calendar quarter index average is:

(a) Less than the Base Index, the reduction shall not result in a rate below Base Rate or

(b) Greater than the Base Index, the increase shall not exceed the difference between Tentative Rate and Base Rate.

In the event of Contract Term Extension, the escalation procedure will be used during the extension period, except that adjusted payment rates for any calendar quarter cannot be less than Tentative Rates, for each species and product group, established under B8.23 for the extension period.

B3.21 Unavailable Index. If an index described in A5 is no longer available, Contracting Officer may replace that index. If Contracting Officer determines that a replacement index does not exist, Current Contract Rates for the remainder of the contract shall be a Flat Rate. Flat Rates will be Tentative Rates adjusted by the arithmetic average of the index described in A5 for a 12-month period prior to its becoming unavailable using the quarterly adjustment procedure outlined in B3.2. Contracting Officer will determine availability and a beginning point to average the index for Flat Rates. Such Flat Rates are subject to rate redetermination as provided elsewhere under this contract.

B3.3 Rate Redetermination. Rates may be redetermined as set forth in this Section. Bid Premium Rates shall be added to all redetermined rates, except as provided in B3.31, B3.32, and B3.33.

Rate redeterminations shall be made in accordance with the standard Forest Service methods in effect 45 days prior to rate redetermination. Such methods shall take into consideration factors that may affect timber value at rate redetermination date.

Redetermined rates shall not be less than Base Rates listed in A4, except for reduction under B3.31,

B3.32, or B3.33. Required Deposits shall be redetermined. Redetermined Specified Road construction cost is subject to the limitations of B5.26.

B3.31 Rate Redetermination for Environmental Modification. In the event of a contract modification under B8.33 or partial termination under B8.34, Contracting Officer shall make an appraisal to determine for each species the difference between the appraised unit value of Included Timber remaining immediately prior to the revision and the appraised unit value of Included Timber to be cut under the modification. The appraisal shall consider the estimated cost of any construction work listed in the Schedule of Items that was performed and abandoned.

Tentative Rates and Flat Rates in effect at the time of the revision will be adjusted by said differences to become Current Contract Rates. Accordingly, Base Rates shall be adjusted to correspond to the redetermined rates if redetermined rates are less than the original Base Rates, subject to a new Base Rate limitation of the cost of essential reforestation or 25 cents per hundred cubic feet or equivalent, whichever is larger. However, existing Base Indices shall not be changed under this Subsection.

Redetermined rates, or differences for rates subject to B3.2, and Required Deposits shall be considered established under B3.1 for timber Scaled subsequent to the contract revision.

B3.32 Rate Redetermination after Catastrophic Damage. In event of Catastrophic Damage and adjustment, if any, of Included Timber, Contracting Officer shall make an appraisal to determine for each species the catastrophe-caused difference between the appraised unit value of Included Timber remaining immediately prior to the catastrophe and the appraised unit value of existing and potential Included Timber immediately after the catastrophe. Included Timber is any that would not be eliminated under B8.32. Potential Included Timber is any that would be added under B8.32.

Tentative Rates and Flat Rates in effect at the time of catastrophe shall be adjusted by said differences to become the redetermined rates for the purpose of a contract modification under B8.32. Accordingly, Base Rates shall be adjusted to correspond to the redetermined rates if redetermined rates are less than the original Base Rates, subject to new Base Rate limitations of 25 cents per hundred cubic feet or equivalent. However, existing Base Indices shall not be changed under this Subsection.

Upon agreement under B8.32, redetermined rates and Required Deposits shall be considered established under B3.1 for timber Scaled subsequent to Catastrophic Damage.

At time of such appraisal, Specified Road construction cost shall include the estimated cost of any construction work listed in the Schedule of Items performed and abandoned.

B3.33 Rate Redetermination for Market Change. In the event of delay or interruption, exceeding 90 days, under B8.33, Contracting Officer shall make an appraisal to determine for each species the difference between the appraised unit value of Included Timber immediately prior to the delay or interruption and the appraised unit value of Included Timber immediately after the delay or interruption. The appraisal shall be done after any rate redetermination done pursuant to B3.31, using remaining volumes.

Tentative Rates and Flat Rates in effect at the time of delay or interruption or established pursuant to B3.31 will be reduced, if appraised rates declined during the delay or interruption, to become Current Contract Rates. Increases in rates will not be considered. Accordingly, Base Rates shall be adjusted to correspond to the redetermined rates if redetermined rates are less than the original Base Rates, subject to a new Base Rate limitation of the cost of essential reforestation or 25 cents per hundred cubic feet or equivalent, whichever is larger. However, existing Base Indices shall not be changed under this Subsection.

Redetermined rates shall be considered established under B3.1 for timber Scaled subsequent to the delay or interruption.

B3.34 Emergency Rate Redetermination. Forest Service shall redetermine rates if, upon Contractor's application, Forest Service determines that, because of changes in the timber market since the award date or the last rate redetermination under this provision, the Producer Price Index identified in A20 has declined by 25 percent. Rates shall be redetermined under B3.3 and shall be considered established under B3.1 for timber Scaled subsequent to Contractor's application. This Subsection shall not apply during Contract Term Extension.

B3.4 Other Payment Rates.

B3.41 Material Not in A2. Incidental amounts of products or portions of trees of species listed in A2 that do not meet Utilization Standards may be removed without charge. Such material may be purposely removed in more than incidental amounts without charge upon written approval of Contracting Officer, and subject to agreement on deposits if needed for road maintenance and use.

Other species or products not listed in A2 may be cut and removed upon written approval of Contracting Officer and subject to agreement on rates of payment and deposits if needed for road maintenance and use.

When any material suitable for use in a product form included in A2 is removed in another product form, the rates of payment shall be not less than but approximately equivalent to Current Contract Rates and Required Deposits.

B3.42 Timber Cut Through Mistake. Undesignated timber meeting Utilization Standards, cut by

Contractor through mistake and included by Contracting Officer under B2.14, shall be removed and paid for at Current Contract Rates and Required Deposits, unless such material is not listed in A2. In such event, Contracting Officer, in accord with standard Forest Service methods, shall establish rates to be paid.

B3.43 Designated Timber Cut But Not Removed. Standard timber shall be removed, as provided in B2.2, prior to acceptance of subdivision for completion of logging and stewardship project operations under B6.36. There shall be no charge when:

(a) The leaving of incidental material is justified under existing conditions, including those under B6.4 or

(b) Cut timber is left by option or requirement, as under B2.31, B2.32, and B6.4.

B3.44 Undesignated Timber Damaged Without Negligence. Undesignated timber meeting Utilization Standards, damaged without negligence by Contractor and designated by Forest Service under B2.131, shall be cut, removed, and paid for at Current Contract Rates and Required Deposits.

B3.45 Undesignated Timber Unnecessarily Damaged or Negligently or Willfully Cut. Undesignated timber meeting Utilization Standards and unnecessarily damaged or negligently or willfully cut by Contractor, if included by Contracting Officer under B2.132, shall be cut, removed, and paid for at Current Contract Rates and Required Deposits that are in addition to liquidated damages under B3.46.

If such timber is of a species or size not listed in A2 or is of a quality different from designated timber, Contracting Officer shall establish payment rates in accord with standard Forest Service methods.

B3.46 Liquidated Damages. Unnecessary damage to or negligent or willful cutting of undesignated timber, as described in B3.45, on portions of Contract Area cut over under this contract is likely to cause substantial silvicultural or other damage to the National Forest. It will be difficult, if not impossible, to determine the amount of such damage. Therefore, Contractor shall pay as fixed, agreed, and liquidated damages an amount equivalent to the amount payable at Current Contract Rates. If designated by Contracting Officer, Contractor shall remove such damaged or cut timber and pay for it at Current Contract Rates.

B3.47 Defect Caused by Abnormal Delay. Scaling deductions made for rot, check, or other defect resulting from abnormal delay in Scaling caused by Contractor shall be recorded separately and charged to Integrated Resource Account at Current Contract Rates and applicable deposits.

B4.0—PAYMENTS

B4.1 Amount Payable for Timber. Current Contract Rates and Required Deposits in effect when the timber is Scaled shall be applied to the Scaled volume to determine the amount Contractor shall pay.

B4.2 Integrated Resource Account. "Integrated Resource Account" is an account maintained by Forest Service of all Contractor's deposits, credits, payment guarantees, and the charges for:

(a) Timber at Current Contract Rates;

(b) Slash disposal, road maintenance, and contract scaling at Required Deposit rates;

(c) Cooperative work at rates established by specific agreement under B4.218;

(d) Stewardship Credits established; and

(e) Other charges provided in this contract.

Cash deposits shall be recorded currently in such account.

Charges for timber cut shall be made when Forest Service prepares and furnishes to Contractor periodic statements of volume and value of such timber cut and Scaled. Charges subject to escalation under B3.2 shall be made initially on the basis stated in B4.214 and shall be adjusted at the end of each calendar quarter, as provided in B3.2.

B4.21 Cash Deposits. Within the limitations of this Subsection, Contractor shall make cash deposits to meet Contractor's obligations within 15 days of billing by Forest Service. Deposits shall be made to Forest Service, U.S.D.A., by mail or delivery to the address to be furnished by Forest Service. Forest Service shall explain the bill at the time it requests each deposit.

B4.211 Downpayment. The downpayment amount shown in A18 may not be applied toward any other payment required under the provisions of this contract, except damages determined pursuant to B9.4, transferred to other contracts, or refunded until stumpage value representing 25 percent of the total bid value of the contract has been charged and paid for or the estimated value of the unscaled timber is equal to or less than the amount of the downpayment.

B4.212 Advance Deposits. Contractor agrees to make cash deposits in advance of cutting to meet charges under B4.2.

Forest Service billings for advance cash deposits shall be in such amounts that Integrated Resource Account will maintain an unobligated balance equal to the applicable charges for timber that Forest Service estimates will be cut in not less than 30 days and not more than 60 days. This advance cash deposit may be reduced to a smaller amount by the terms of B4.211, B4.213, B4.215, and/or B4.217. Except for amounts required pursuant to B4.211, B4.213, and B4.217, Contractor shall not be required to make advance deposits above those required under this Item.

When the credit balance in Integrated Resource Account is less than the amount due for timber estimated to be cut in 10 days, Contracting Officer will suspend all or any part of Contractor's Operations until payment or acceptable payment guarantee is received.

B4.213 Periodic Payment Schedule. Contractor shall make periodic payments for stumpage value, as shown in A19.

In the event Contractor has not paid the amount(s) stated in A19 as stumpage for volume removed by the periodic payment determination date(s), Forest Service shall issue a bill for collection for the difference between the required amount and payments made by Contractor. If payment(s) fall due on a date other than a normal billing date, the payment date shall be extended to coincide with the next Integrated Resource Account billing date.

The amount of the periodic payment(s) will be reduced if the payment(s) would result in Contractor's credit balance for timber charges exceeding the Current Contract Value.

Only cash may be used for this purpose. No other form of payment is acceptable. Forest Service will apply the payments to subsequent charges on this contract under the terms of B4.212.

Except for Contract Term Extensions under B8.23, periodic payment determination date(s) that have not been reached shall be adjusted one day for each additional day of contract time granted.

B4.214 Deposits for Charges Subject to Escalation. Deposits requested to cover estimated charges for timber subject to escalation under B3.2 shall be based upon Current Contract Rates and related deposits in effect during the previous calendar quarter.

B4.215 Deposits When Payment Guaranteed. To the extent payment guarantee is provided under B4.3, requirements for advance cash deposits under B4.212 shall be waived for the value of timber on Contract Area that is cut, but not removed, and for the value of products removed from Contract Area for not more than a monthly billing period, subject to the provisions of B4.4.

B4.216 Blanket Cash Deposits. Contractor may make cash deposits under a written agreement to cover charges made under this and other contracts within the same National Forest. Forest Service shall allocate such deposits to such contracts. When there is to be no timber cutting hereunder for 30 days or more and payment of current charges has been made, the allocation to this contract shall be reallocated to other contracts within the same National Forest at Contractor's request. Contractor shall not start cutting until allocation has again been made to this contract.

B4.217 Extension Deposits. In the event of Contract Term Extension, Forest Service shall divide the difference between Current Contract Value as of the start of any Contract Term Extension and the credit balance of any deposit made pursuant to B4.213 by the number of whole months remaining in Normal Operating Season(s) within the extension period to determine the amount of each "Extension Deposit."

Contractor shall make the initial Extension Deposit prior to Forest Service executing the contract modification. In response to Forest Service billing under B4.21, Contractor shall make advance cash deposits. Such deposits shall at least equal each Extension Deposit required for each whole month remaining in Normal Operating Season(s) during the extension period. Extension Deposits shall be due by the last day of each month during Normal Operating Season whether or not the volume that is covered by such deposits has been Scaled.

Due dates for Extension Deposits during the extension period may be delayed when Contractor earns Contract Term Adjustment if Termination Date, as adjusted, results in one or more additional complete months within Normal Operating Season(s).

B4.218 Cooperative Deposits. On a basis of cooperation or assistance (16 USC 572) and by a written agreement, Forest Service shall perform all or portions of the work that Contractor is obligated to perform under this contract, as well as furnish other Services in connection with activities under this contract. When Forest Service is to perform such work, Contractor shall make one or more deposits to cover the estimated cost of the work. On request of Contractor, Forest Service shall render monthly accounts, as may be specified in such agreement.

B4.22 Temporary Reduction of Downpayment. When, under B8.33, Contracting Officer requests Contractor to delay or interrupt Contractor's Operations for more than 90 days, the downpayment amount being held on deposit may be temporarily reduced upon the written request of Contractor or at the discretion of Contracting Officer. For the period of the delay or interruption, the downpayment on deposit may be reduced to $1,000 or two (2) percent of the downpayment amount listed in A18, whichever is larger.

Any downpayment amount temporarily reduced pursuant to this Subsection may be refunded or transferred at the request of Contractor. However, if Contractor has outstanding debt owing the United States, Contracting Officer must apply the amount of downpayment that could be refunded to the debt owed in accordance with the Debt Collection Improvement Act, as amended (31 USC 3701, *et seq*.).

Upon Contractor's receipt of bill for collection and written notice from Contracting Officer that the basis for the delay or interruption no longer exists, Contractor shall restore the downpayment to the full amount shown in A18 within 15 days after the date the bill for collection is issued, subject to the provisions of B4.4. Contractor shall not resume contract operations until the downpayment amount is fully restored.

B4.23 Refund of Excess Cash. If at any time the credit balance of Integrated Resource Account exceeds the charges for timber that Forest Service estimates will be cut within the next 60 days, any portion of such excess that is due to cash in the account shall be

refunded, if requested by Contractor, unless deposited under B4.211, B4.213, B4.217, or B4.218. If Contractor plans no cutting within the next 60 days, Forest Service may refund the entire unencumbered cash balance, except as provided in this Subsection. After a refund for a shutdown, deposits shall be made to meet the requirements of B4.212 before additional timber may be cut.

B4.24 Refund after Scaling Completed. Any cash deposit, in excess of that required to meet charges under B4.2, shall be refunded or transferred within 15 days of Contractor's request after Scaling is completed, except for amounts estimated to be required under B9.5.

B4.3 Payment Guaranteed by Bond or Deposited Securities. To guarantee payment, Contractor may furnish and maintain an acceptable surety bond or deposit in a Federal Depository negotiable securities of the United States. The securities shall be deposited through the Regional Fiscal Agent accompanied by a power of attorney and agreement authorizing the bond-approving officer to sell or collect such securities if payment is not made within 15 days of billing by Forest Service. The penal sum of such surety bond or the market value at time of deposit of such negotiable securities shall be the maximum amount of the payment guaranteed.

For payment purposes, penal sum of the surety bond or market value at time of deposit of negotiable securities shall be in lieu of the performance bond furnished under B9.1.

B4.31 Blanket Bond. If Contractor furnishes an acceptable bond, or deposits securities, in accordance with B4.3, to guarantee payment for timber from this and other contracts within the same National Forest, the amount of such bond or deposited securities shall be allocated to such contracts by Forest Service. When there is to be no timber cutting hereunder for 30 days or more and payment of current charges has been made, the allocation to this contract shall be reallocated to other contracts at Contractor's request. Contractor shall not start cutting hereunder until this contract receives an allocation that will meet the obligation for payment guarantee.

B4.32 Letters of Credit for Payment Bond. Notwithstanding the provisions of B4.3, Contractor may use letters of credit in lieu of a surety bond for payment bond purposes when approved by Contracting Officer.

B4.4 Payments Not Received. (a) Payments are due and payable on the date of issue indicated on the bill for collection. When a payment for timber cut and other charges is not received at the location designated by Forest Service by the date allowed in the bill for collection for receipt of payment, Contracting Officer will suspend all or any part of Contractor's Operations until payment or acceptable payment guarantee is received. Other charges include, but are not limited to:

(i) Slash disposal, road maintenance, and contract scaling deposits;

(ii) Cooperative work at rates established by specific agreement under B4.218;

(iii) Damages pursuant to B9.4;

(iv) Road use fees;

(v) Restoration of downpayment pursuant to B4.22;

(vi) Periodic payments pursuant to B4.213;

(vii) Extension Deposits pursuant to B4.217; and

(viii) Other mandatory deposits.

(b) Failure to pay amounts due by the date allowed in the bill for collection for receipt of payment shall be considered a breach under B9.3. The 30-day notice period prescribed therein shall begin to run as of the end of business on the date allowed for receipt of payments. If the performance or payment is guaranteed by surety bond, the surety will receive a copy of the written notification of breach. Demand will be made on the surety or other institution providing the guarantee or bond instrument for immediate payment 10 days after issuance of written notification of the breach.

(c) Pursuant to the Debt Collection Improvement Act of 1996, as amended, if payment is not received by Forest Service within 15 days after the date of issue indicated on the bill for collection:

(i) Simple interest shall be assessed at the higher of the Current Value of Funds Rate or the Prompt Payment Rate as established by the Secretary of the Treasury. Interest shall begin to accrue as of the date of issue indicated on the initial bill for collection.

(ii) Debtors will be assessed administrative charges, in addition to the delinquent amount due. Administrative charges are those additional costs incurred by the Government in processing, handling, and collecting delinquent debts.

(iii) A penalty charge of six (6) percent per annum will be assessed on any portion of a debt delinquent more than 90 days. This penalty charge is in addition to interest and administrative charges under paragraphs (c)(i) and (c)(ii). The penalty charge shall accrue from the date of issue indicated on the bill for collection and shall be assessed on all outstanding amounts, including interest and administrative costs assessed under paragraphs (c)(i) and (c)(ii).

(iv) Payments will be credited on the date received by the Federal Depository or Collection Officer designated on the bill for collection.

(d) Forest Service remedies for Contractor's failure to make payment for timber cut and other charges when due, except for accrual of interest, suspension of all or any part of Contractor's Operations, and administrative offset, shall be stayed for so long as:

(i) A bona fide dispute exists as to Contractor's obligation to make such payment and

(ii) Contractor files and prosecutes a timely Claim.

B4.5 Stewardship Credits. "Stewardship Credits" are credits that are earned and established when work described in C6.9# has been performed and accepted. Stewardship Credits shall be earned at the rate as shown in A4c. Earned Stewardship Credits may be used to pay for Included Timber value in excess of Base Rates and Required Deposits. Base Rates and Required Deposits must be paid in cash.

B4.51 Progress Estimates. Forest Service shall make timely estimates of Contractor's progress on stewardship projects. On the basis of such progress estimates, Forest Service shall credit Integrated Resource Account each month as such work proceeds.

B4.52 Excess Stewardship Credits. In the event there are unused established Stewardship Credits when all Included Timber has been cut and removed, Forest Service, at its option, shall either add more timber or make cash payment for the unused Stewardship Credits.

B4.53 Excess Timber Value. In the event the value of all Included Timber exceeds the total value of all mandatory projects shown in A4c, plus the optional projects shown in A4c that Contractor has been authorized to perform:

(a) Contracting Officer may authorize additional optional projects shown in A4c if the excess timber value exceeds 10 percent of the total timber value, or

(b) Contracting Officer may authorize additional optional projects shown in A4c or require cash payment if the excess timber value is less than 10 percent of the total timber value, or

(c) Contractor shall make cash payment for the excess timber value if there are no remaining optional projects shown in A4c authorized by the Contracting Officer to be performed.

B4.54 Cash Payment for Stewardship Projects. In lieu of providing timber for established Stewardship Credits, Forest Service may elect to provide a cash payment to Contractor.

B4.55 Refund of Unused Stewardship Credits. When, under B8.33, Contracting Officer requests Contractor to delay or interrupt Contractor's operations for more than 60 days, unused Stewardship Credits may be refunded upon the request written of Contractor or at the discretion of Contracting Officer.

Contractor agrees that when unused Stewardship Credits are refunded that Contractor shall remit, release, and forever discharge the United States from any and all Claims arising from any delay in using Stewardship Credits under this contract, including, but not limited to, any Claims of interest or other costs.

If Contractor has outstanding debt owing the United States, Contracting Officer must apply the amount of Stewardship Credit that could be refunded to the debt owed in accordance with the Debt Collection Improvement Act, as amended.

B5.0—TRANSPORTATION FACILITIES

B5.1 Authorization. Contractor is authorized to construct and maintain roads, bridges, and other transportation facilities, as needed for harvesting Included Timber and completing stewardship projects on National Forest and other lands where Forest Service has such authority. As used in this contract "construct" includes "reconstruct."

Location and construction of Specified Roads shall be in accordance with B5.2. Unless otherwise provided herein, construction may be progressive during this contract. Maintenance shall be governed by B5.3. The location and clearing widths of all Temporary Roads or facilities shall be agreed to in writing before construction is started. "Temporary Roads" are roads other than Specified Roads that are constructed by Contractor for the purpose of harvesting Included Timber or completing stewardship projects.

Contractor is authorized to cut and use for construction, without charge, construction timber designated by agreement.

B5.11 Requirements of Rights-of-Way. Contractor's road construction and use of rights-of-way identified in attached list or C5.111# shall be confined to rights-of-way and limited by the related easements and stipulations, if any, unless Contractor makes other arrangements that will not infringe upon or adversely affect the grantee's rights. Easements or right-of-way documents are available in the offices of the Forest Supervisor and District Ranger.

B5.12 Use of Roads by Contractor. Except as provided herein, Contractor is authorized to use existing National Forest system roads and Specified Roads listed in A7, when Forest Service determines that such use will not cause damage to the roads or National Forest resources.

If Contractor's use of an existing temporary or National Forest system road, not listed in A7, cannot be satisfactorily accommodated without reconstruction, Contractor shall be authorized to use such road upon agreement as to the minimum reconstruction work that Contractor shall perform before hauling. When appropriate, such road shall be included in A7 as an alternate facility under B5.26.

C5.12# lists existing roads shown on Contract Area Map that for such reasons as limitations in structural capacity, safety, and protection of soil, water, and roads:

(a) Cannot be used for log hauling or

(b) May be used only under the restrictive limitations stated therein.

B5.2 Specified Roads. "Specified Roads" are roads, including related transportation facilities and appurtenances, shown on Contract Area Map and listed in

A7. Contractor shall construct Specified Roads used under this contract. Construction initiated by Contractor on any such Specified Road shall be completed to an agreed terminus that meets Contractor's needs and prevents unnecessary impact on National Forest resources. Construction to such terminus shall be in full accordance with Plans and specifications identified in A7 or specifications and the Schedule of Items attached hereto, except for agreed adjustments needed to accommodate such terminus. For each pay unit, the "Schedule of Items" itemizes quantity of work and materials and cost, with method of measurement and basis for payment. Forest Service shall revise the Schedule of Items to show the estimated cost for the portion constructed to the revised terminus as a separate segment.

A Temporary Road shall not be constructed substantially on the location for a Specified Road, except by agreement.

In event of agreed substitution or revision of construction design, specifications, or performance responsibility under B5.212, B5.25, B5.26, or C5.215#, A7 shall be modified. If Contractor does not need a Specified Road or a portion of a Specified Road for harvesting Included Timber or completing stewardship projects and the Specified Road is not constructed, the deletion of the road or road segment will be a mutually agreed Design Change and Integrated Resource Account will be adjusted for the reduction in cost, as provided in B5.25.

References in the contract to specifications, standards, or test methods adopted by the American Association of State Highway and Transportation Officials (AASHTO), American Society for Testing and Materials (ASTM), General Services Administration (GSA), or other recognized national technical associations shall mean specifications, standards, or test methods, including interim or tentative issues, that are in effect on the date of contract advertisement.

B5.21 Engineering. Forest Service completed survey and design for Specified Roads prior to contract advertisement, unless otherwise shown in A8 or Contractor survey and design are specified in A7. On those roads for which Forest Service completes the design during the contract, the design quantities shall be used as the basis for revising estimated costs stated in the Schedule of Items and adjusting Integrated Resource Account.

Forest Service engineering shall be completed according to the schedule in A8. Should Forest Service be unable to perform the designated survey and design by the completion date or other agreed to time, upon written agreement, Contractor shall assume responsibility for such work. In such event, Contracting Officer shall revise:

(a) A7 to show Contractor's performance responsibility.

(b) The Schedule of Items to include costs of survey and design, as provided under B5.24, and adjust Integrated Resource Account, as provided in B5.25. Forest Service shall calculate such costs, using unit rates comparable with those used in the Schedule of Items.

Contractor shall furnish a schedule to Forest Service of specific dates for the start of construction. The schedule of construction shall be submitted to Forest Service for approval within 60 days after contract award and prior to beginning work. Contractor's construction schedule shall reflect Forest Service survey and design completion dates. Forest Service may agree to Contractor's request for an alternate date for starting construction.

Contractor shall perform survey, design, and construction staking of Specified Roads to be engineered by Contractor in accordance with specifications attached hereto. Based upon the quantities developed by such design, as approved by Forest Service, Contracting Officer shall revise the estimated costs stated in the Schedule of Items and adjust Integrated Resource Account. The methods of computing such revised costs shall be consistent with the methods that would have been used had the engineering been performed prior to contract advertisement.

B5.211 Contract Plans. "Plans" are documents that show location, details, and dimensions of the work to be performed. On any of the contract Plans where a portion of the work is drawn out and the remainder is shown in outline, the parts drawn out shall apply to all other like portions of the work.

"Shop Drawings" include drawings, diagrams, layouts, schematics, descriptive literature, illustrations, lists or tables, performance and test data, and similar materials furnished by Contractor to explain in detail specific portions of the work required by the contract. Contractor shall submit a minimum of five (5) sets of required Shop Drawings to Forest Service, three (3) sets of which will be retained by Forest Service. Shop Drawings shall not exceed 24 inches by 36 inches in size. Approval or rejection and date will be noted or stamped on each set. Unless agreed otherwise, Forest Service shall approve or reject the Shop Drawings within 10 days of submission. Such approval of the Shop Drawings shall not be construed as a complete check, but will indicate only that the general method of construction and detailing is satisfactory. If the Shop Drawings are rejected, Contractor must make the noted revisions and resubmit the Shop Drawings.

A change in the amount of construction work that exceeds construction tolerances specified in the specifications identified in A7 caused by a Forest Service error in construction staking shall be treated as a Design Change. When incompatible situations arise between Plans, specifications, and actual conditions on the

ground, Contractor shall make corrections pursuant to B5.253.

B5.212 Construction Staking. Contractor shall avoid careless or negligent damage to construction stakes, flags, or marks. If such damage occurs, Contractor shall be required to replace stakes necessary to construction. Contractor's replacement staking shall be approved by Forest Service. Alternatively, upon Contractor's request, Contracting Officer may agree to perform such work under B4.218.

When A7 shows that construction stakes are to be set by Forest Service after clearing, Contractor shall submit to Forest Service a written schedule for clearing, construction staking, and construction that will provide Forest Service a reasonable period for setting construction stakes. Time for setting construction stakes may be modified by written agreement.

If Forest Service performs construction staking for Specified Roads, timing of such staking shall permit Contractor's clearing and other construction activity to proceed without hindrance or delay, provided Contractor's construction activity is reasonably consistent with needs identified in Contractor's Operating Schedule or amendments thereto.

Should Forest Service be unable to perform construction staking in such reasonable period, upon written agreement, Contractor shall assume the responsibility for construction staking for agreed upon portions of Specified Roads. In such event, Contracting Officer shall revise:

(a) A7 to show Contractor's performance responsibility.

(b) The Schedule of Items to include costs of construction staking, as provided under B5.24, and adjust Integrated Resource Account, as provided in B5.25. Forest Service shall calculate such costs, using unit rates comparable with those used in the Schedule of Items.

B5.22 Material Delivery. Within 60 days after award date, Contractor shall provide Forest Service a written schedule showing the desired delivery dates of any material to be supplied by Forest Service. With reasonable notice, schedule may be amended by agreement. Forest Service agrees to make delivery within 15 days after the scheduled delivery dates that are at least 60 days after the schedule is submitted, unless prevented by causes beyond control of Forest Service.

If Contractor does not provide Forest Service the written schedule within the period provided in this Subsection, Forest Service agrees to make delivery within 90 days after a late schedule is submitted, unless prevented by causes beyond control of Forest Service. After delivery to and written receipt by Contractor, Contractor is responsible for installation of needed material and for any loss of or damage to such material due to Contractor's negligence prior to installation or return of unused material to Forest Service.

At Contractor's option, Forest Service deliveries shall be to Contractor's storage area, as agreed, or to the nearest practicable point to the job site along existing roads. Unused material shall be returned to Forest Service at location of delivery, unless agreed otherwise.

B5.23 Use of Partially Constructed Roads. Unless Contracting Officer determines that there is justification under existing conditions, and ground conditions permit hauling without undue damage, portions of Specified Roads shall be Substantially Completed prior to their use for hauling timber. When necessary to facilitate construction and protect bridges and roads from damage, timber felled in construction and timber logged directly to the road from areas immediately adjacent thereto may be hauled before road construction is Substantially Completed. Such hauling shall be confined to periods when abnormal soil erosion and damage to National Forest lands will not result.

"Substantially Completed" means:

(a) Completion of grading and installation of drainage structures so they will function effectively and

(b) Laying the specified depth of base course, if any, unless Contracting Officer determines that physical conditions make it impractical or ground conditions permit hauling without undue damage.

No more than half of Included Timber to be hauled over such portions of road shall be hauled until the base course has been applied.

Unless agreed otherwise, specified reconstruction shall be completed on any portion of road prior to hauling on that portion.

B5.24 Estimated Cost. Estimated costs by construction phases for Specified Roads listed in A7 are stated by segments in the Schedule of Items. Such estimated costs are subject to adjustment under B3.3, B5.2, B5.21, B5.212, B5.25, and B5.26. Appropriately adjusted costs shall be made a part of a revised Schedule of Items and shown as adjustments to Integrated Resource Account. The revised Schedule of Items shall supersede any prior Schedule of Items when it is dated and signed by Contracting Officer and a copy is furnished to Contractor.

B5.25 Construction Cost Adjustment. Contracting Officer, as provided in B5.21, B5.212, B5.251, B5.252, and B5.253, shall adjust Specified Road construction cost estimates in the Schedule of Items and show the adjustments as credits or debits to Integrated Resource Account in the month when the road segment is accepted.

B5.251 Variation in Quantities. (a) This Item applies only to differences between quantities shown in the Schedule of Items and measured quantities actually constructed and accepted that are not covered under B5.252 or B5.253. Only changes in quantities where other than contract quantities or lump sum is specified in the Schedule of Items are subject to this Item.

(b) Adjustments to the Specified Road construction cost for variation in quantities shall be computed at unit rates established in the Schedule of Items for units of work actually constructed and measured in accordance with specified method of measurement shown in the Schedule of Items and described in the specifications identified in A7, except that:

(i) When quantity of authorized work performed or material furnished by Contractor, under any item shown in the Schedule of Items and covered by this Item, is more than 115 percent of original quantity, use Current Unit Rates to calculate the adjustment for that portion of work above 115 percent of original quantity.

(ii) When quantity of authorized work performed or material furnished by Contractor, under any item shown in the Schedule of Items and covered by this Item, is less than 85 percent of original quantity, Forest Service shall make a revised estimate of cost for such work. Any revised estimate shall use the same procedures as those used in original estimates using rates comparable to those used in computing the most recent cost estimate for the contract. The revised cost estimate shall take into account any increase or decrease in unit rates that results from a reduction in quantity of work.

(c) "Current Unit Rates" are Forest Service estimates of the unit rates for doing the work at the time the adjustment is approved.

B5.252 Physical Change. (a) Forest Service shall adjust the Specified Road construction cost if, prior to acceptance under B6.36, a physical change, caused by a single event and not due to negligence of Contractor, results in an increase or decrease in work and/or materials furnished by Contractor involving additional estimated cost of:

(i) More than $10,000 or

(ii) More than 10 percent of total Specified Road construction cost, whichever is less.

(b) Increases to the Specified Road construction cost shall include cumulative estimated costs of repairing damage from things such as slides, washouts, landslips, and fire. Plans and specifications shall be revised when necessary to meet new conditions. Quantities of work and/or materials determined from such revised Plans and specifications, together with estimated quantities of work and/or materials abandoned, shall be the basis for the revised Specified Road construction cost.

(c) Forest Service shall determine difference in quantities for portions of Specified Road affected by physical change by comparing most recent previous quantities with total of:

(i) Estimated quantities actually constructed prior to physical change, including work abandoned, and

(ii) Estimated quantities to be constructed following physical change.

(d) Forest Service shall calculate the amount of increase to the Specified Road construction cost by applying:

(i) Current Unit Rates to differences when quantities increase and

(ii) Unit rates comparable to those used in computing most recent cost estimate for the contract when quantities decrease.

(e) When quantity of authorized work to be performed or material furnished by Contractor, under any item shown in the Schedule of Items, is reduced to less than 85 percent of original quantity, Forest Service shall make a revised estimate of cost for such work and adjust the Specified Road construction cost. Any revised estimate shall use the same procedures as those used in the original estimates using rates comparable to those used in the most recent cost estimate for the contract. The revised estimate shall take into account any increase or decrease in unit rates that results from a reduction in quantity of work.

B5.253 Design Change. (a) "Design Change" is a change in work and/or materials shown in the Schedule of Items and described in Plans or specifications that has been mutually agreed to in writing or ordered by Contracting Officer. Changes of a minor nature (such as adjustment in horizontal and vertical alignment, that do not exceed specified tolerance, necessary to maintain or balance earthwork quantities substantially as designed) and variation in quantities, as described in B5.251, shall not be considered Design Changes.

(b) Additions, deletions, or changes in types or diameter of culverts shown in Plans and changes in designated water sources shown on Plans shall be considered Design Changes.

(c) Forest Service may, by written notice from Contracting Officer, order changes in work to be performed and/or materials to be furnished by Contractor within general scope of the contract. Such work shall:

(i) Be due to differences between anticipated and actual field conditions,

(ii) Be necessary to construct Specified Roads to design standards, or

(iii) Be necessary to assure stability of Specified Roads.

(d) In addition, Contracting Officer may include work to protect resource values in ordered Design Changes. Such work must be related to construction of Specified Roads and be necessary to prevent damage to soil and water values immediately tributary to Specified Roads. Other Design Changes may be made by mutual written agreement.

(e) Forest Service shall revise Plans and specifications as necessary to meet new conditions. Quantities of work and/or materials determined from such revised Plans and specifications, together with quantities of

work and/or materials abandoned, shall be the basis for adjusting the Specified Road construction cost.

(f) Forest Service shall determine the difference in quantities for the portion of Specified Road affected by Design Change by comparing the most recent previous quantities with the total of:

(i) Estimated quantities actually constructed prior to Design Change and

(ii) Estimated quantities to be constructed following Design Change.

(g) Calculate the amount of adjustment to the Specified Road construction cost by applying:

(i) Current Unit Rates to difference when quantities increase and

(ii) Unit rates comparable to those used in computing most recent cost estimates of the contract when quantities decrease.

(h) When quantity of authorized work to be performed or material furnished by Contractor, under any item shown in the Schedule of Items, is reduced to less than 85 percent of original quantity, Forest Service shall make a revised estimate of cost of such work and adjust the Specified Road construction cost. Any revised estimate shall use the same procedures as those used in original estimates using rates comparable to those used in the most recent cost estimate for the contract. The revised estimate shall take into account any increase or decrease in unit rates that results from a reduction in quantity of work.

B5.26 Alternate Facilities. If under Contractor's Operating Schedule, roads needed for the removal of Included Timber differ substantially from Specified Roads, other roads may be added to A7. Contracting Officer shall assure that road routing, location, design, and needed easements will make such other roads acceptable as parts of the National Forest transportation facilities. Contractor shall provide survey, design, and construction staking for such other roads.

Based on design quantities from such engineering, Forest Service shall estimate Specified Road construction costs of alternate facilities, using methods consistent with those used in the original computation of the Schedule of Items. If Specified Road construction costs for acceptable alternate facilities are less than the estimated costs of facilities listed in the original Schedule of Items that Contractor does not construct, Integrated Resource Account shall be adjusted by Forest Service to reflect the reduction in costs. In event of rate redetermination under B3.3, such allowed costs shall be the redetermined estimated costs of facilities listed in the original Schedule of Items that Contractor does not construct.

B5.27 Temporary Credit for Unamortized Specified Road Construction Cost. When, under B8.33, Contracting Officer requests Contractor to delay or interrupt Contractor's Operations for more than 90 days, the unamortized cost of Specified Roads shall be credited to Contractor's Integrated Resource Account upon the written request of Contractor or at the discretion of Contracting Officer. The amount credited to Contractor shall be limited to stumpage paid above Base Rates.

Any Specified Road construction cost credited to Contractor pursuant to this Subsection may be refunded or transferred at the request of Contractor. However, if Contractor has outstanding debt owing the United States, Contracting Officer must apply the amount of credit that could be refunded to the debt owed in accordance with the Debt Collection Improvement Act, as amended.

Upon written notice from Contracting Officer that the basis for the delay or interruption no longer exists, Contractor shall pay for timber a per unit amount, in addition to Current Contract Rates, that is equal to the amount credited to Contractor's Integrated Resource Account divided by 80 percent of the estimated remaining volume of the contract, until the full amount credited to Contractor has been returned.

B5.3 Road Maintenance. Contractor shall maintain roads, commensurate with Contractor's use, in accordance with Road Maintenance Requirements in C5.31# and the Road Maintenance Specifications. Performance of road maintenance work by Contractor may be required prior to, during, or after each period of use. The timing of work accomplishment shall be based on Contractor's Operating Schedule under B6.31.

When two or more commercial users are simultaneously using the same road where Forest Service is not requiring maintenance deposits, the commercial users will develop maintenance responsibilities and arrangements for accomplishing the work. Forest Service must agree to this plan. If the commercial users cannot agree on maintenance responsibilities, Forest Service shall resolve the differences.

If Contractor elects to use different roads than those listed in C5.31#, Forest Service shall determine Contractor's commensurate share of road maintenance and revise road maintenance deposits in C5.32#.

If Forest Service cannot perform its full commensurate share of road maintenance, Forest Service shall make a cash payment to Contractor for performance of such work.

Unless agreed in writing, prehaul maintenance shall be completed on any portion of road prior to hauling on that portion. Maintenance, as used in this contract, does not include road reconstruction or repairs of an extraordinary nature.

B5.4 Use by Others. Forest Service shall have the right to use any road constructed by Contractor under this contract for any and all purposes in connection with the protection and administration of the National Forest. Other parties, in connection with the logging of tributary National Forest timber, may use roads constructed by

Contractor hereunder when Contracting Officer determines that such use will not materially interfere with Contractor's Operations. Third party use shall be contingent upon Contracting Officer determining, and third party agreeing to pay, a fair share of maintenance cost commensurate with such commercial use.

Unless otherwise provided in C5.4, Forest Service shall authorize other uses of roads constructed by Contractor hereunder only if:

(a) Contracting Officer makes appropriate arrangements to relieve Contractor of related maintenance costs commensurate with such other uses and

(b) Such other uses will not materially interfere with Contractor's Operations.

Where Contractor reconstructs a road having established use, Contractor's use during reconstruction and thereafter shall be such as to reasonably accommodate such established use. Contracting Officer shall ensure that other users do not materially interfere with Contractor's right to use such reconstructed road.

B6.0—OPERATIONS

B6.1 Representatives. Unless otherwise agreed, Contractor shall designate, in writing, a representative who is authorized to receive notices in regard to performance under this contract and take related action. In no case shall Contractor designate any representative to this contract who is currently debarred, proposed for debarment, or suspended by the Federal Government. Contractor's representative shall provide a copy of the contract to Contractor's field supervisor and persons authorized to assume responsibilities in the field supervisor's absence. Prior to initial operations and after shutdowns of 10 days or more, Contractor's representative shall notify Forest Service 2 days, excluding weekends and Federal holidays, before any operations begin on Contract Area.

Contractor's representative shall designate, in writing, a field supervisor, one of whose responsibilities shall be on-the-ground direction and supervision of Contractor's Operations. The field supervisor shall be readily available to the area of operations when operations are in progress and shall be authorized to receive notices in regard to performance under this contract and take related action. The responsibilities of the field supervisor shall include the safeguarding of National Forest resources and performance within the terms of the contract. Contractor representative will furnish Forest Service with names of persons authorized to assume responsibilities in field supervisor's absence. Such delegations may be made a part of Contractor's annual Operating Schedule under B6.31.

Unless Contracting Officer designates another Forest Service representative and notifies Contractor in writing, the District Ranger is the representative of Forest Service. Forest Service representative shall:

(a) Receive notice in regard to performance under this contract,

(b) Take action in relation to this contract, and

(c) Be readily available to the area of construction, stewardship project work, and logging operations.

Contracting Officer or Forest Service representative shall designate other on-the-ground representatives in writing along with their specific contractual responsibilities and authority. Representatives with authority delegated in writing are the only Forest Service personnel authorized to provide notice or take related actions under the contract. Such delegation shall be made within 60 days of contract award.

B6.11 Notices. Notices by either party as to action taken or to be taken by the other respecting this contract shall be made in writing to the other party's designated representative.

B6.2 Improvements. Contractor is authorized to construct on National Forest land, buildings, facilities, and other improvements needed to log Included Timber and complete stewardship projects. Such construction shall be located where approved in writing by Forest Service and shall be constructed and used in a manner that will protect National Forest values.

Contractor shall comply with the rules and regulations governing the operation of premises that are occupied and shall perform the contract in a manner that will not interrupt or interfere with the conduct of Forest Service business.

Forest Service shall grant written permission before any camp, quarry, borrow pit, storage, or service area, other than as shown on Plans, is opened or operated on National Forest land or administered lands. A camp is interpreted to include the campsite or trailer parking area of any employee, agent, Subcontractor, or their employees or agents working on the project for Contractor. Such permission, if granted, shall be without charge to Contractor.

B6.21 Removal. Unless Forest Service authorizes continued use, Contractor shall remove or dispose of all improvements when no longer needed. Should Contractor fail to remove or dispose of improvements within 6 months after Termination Date, Forest Service may dispose of improvements at Contractor's expense under B9.5 or may, upon written notice to Contractor, assume title to improvements in the name of the United States. In the latter event, Contractor shall not be required to remove such improvements.

B6.22 Protection of Improvements. So far as practicable, Contractor shall protect Specified Roads and other improvements (such as roads, trails, telephone lines, ditches, and fences):

(a) Existing in the operating area,

(b) Determined to have a continuing need or use, and

(c) Designated on Contract Area Map.

Contractor shall keep roads and trails needed for fire protection or other purposes and designated on Contract Area Map reasonably free of equipment and products, slash, and debris resulting from Contractor's Operations. Contractor shall make timely restoration of any such improvements damaged by Contractor's Operations and, when necessary because of such operations, shall move such improvements, as specified in C6.22#.

B6.221 Protection of Improvements Not Owned by Forest Service. Forest Service shall notify all utility companies, or other parties affected, and make arrangements for all necessary adjustments of the public utility fixtures, pipelines, and other appurtenances likely to be affected by Contractor's Operations.

When Contractor's Operations are adjacent to properties of railway, telephone, or power companies, or other property, work shall not begin until Contractor has identified actions necessary to prevent damage.

Contractor shall cooperate with the owners of any underground or overhead utility lines in their removal and/or rearrangement operations in order that these operations may progress in a reasonable manner, utility duplication or rearrangement work may be reduced to a minimum, and services shall not be unnecessarily interrupted.

In the event of interruption to utility services because of accidental breakage or as a result of lines being exposed or unsupported, Contractor shall promptly notify the proper authority and shall cooperate with that authority in the restoration of service until the service is restored.

When materials are to be hauled across the tracks of any railway, Forest Service will make arrangements with the railroad for the use of any existing crossing or for any new crossing required. Contractor shall make arrangements for use of alternate crossings. All construction work to be performed by Contractor on the railroad right-of-way shall not damage railroad company's property.

B6.222 Protection of Property. In construction and reconstruction of Specified Roads, Contractor shall not unnecessarily remove, deface, injure, or destroy trees, shrubs, or other natural features, unless specifically authorized. To the extent practicable, Contractor shall confine operations to within the clearing limit or other areas designated in the contract and prevent the depositing of rocks, excavated materials, stumps, or other debris outside these limits.

Material that falls outside these limits shall be retrieved, disposed of, or incorporated in the work to the extent practicable and necessary to protect adjacent resource values, unless otherwise agreed.

B6.23 Protection of Land Survey Monuments. Forest Service shall appropriately designate on the ground all known survey monuments, section corners, and other corner accessories. Forest Service shall post identifying signs on two sides of each known bearing tree.

Forest Service shall arrange protective or perpetuative action that does not cause unnecessary delay to Contractor in authorized clearings, such as Clearcutting Units and road construction, and in other instances where damage to monuments, section corners, and other corner accessories is unavoidable.

Contractor shall protect all known survey monuments, witness corners, reference monuments, and bearing trees against avoidable destruction, obliteration, or damage during Contractor's Operations. If any known monuments, corners, or accessories are destroyed, obliterated, or damaged by Contractor's Operations, Contractor shall hire the appropriate county surveyor or a registered land surveyor to reestablish or restore at the same location the monuments, corners, or accessories. Such surveyors shall use procedures in accordance with the Bureau of Land Management "Manual of Instructions for the Survey of the Public Lands of the United States" for General Land Office surveys and in accordance with State law for others. Contractor shall record such survey in appropriate county records.

B6.24 Protection Measures Needed for Plants, Animals, Cultural Resources, and Cave Resources. Locations of known areas needing special measures for the protection of plants, animals, cultural resources, and/or cave resources are shown on Contract Area Map and/or identified on the ground. Special protection measures needed to protect such known areas are identified in C6.24#.

In addition to any special protection measures noted, Contractor has a general duty to protect all known and identified resources referenced in this Subsection from damage or removal during Contractor's Operations. Discovery of additional areas, resources, or members of species needing special protection shall be promptly reported to the other party, and operations shall be delayed or interrupted at that location, under B8.33, if Contracting Officer determines there is risk of damage to such areas, resources, or species from continued operations.

Wheeled or track-laying equipment shall not be operated in areas identified as needing special measures for the protection of cultural resources, except on roads, landings, tractor roads, or skid trails approved under B5.1 or B6.422. Unless agreed otherwise, trees will not be felled into such areas. Contractor may be required to backblade skid trails and other ground disturbed by Contractor's Operations within such areas in lieu of cross ditching required under B6.6.

Contractor shall immediately notify Forest Service if disturbance occurs to any area identified as needing special protection measures and shall immediately halt

operations in the vicinity of the disturbance until Forest Service authorizes Contractor to proceed. Contractor shall bear costs of resource evaluation and restoration to identified sites. Such payment shall not relieve Contractor from civil or criminal liability otherwise provided by law.

Nothing in this Subsection shall be interpreted as creating any warranty that all locations and special measures for the protection of plants, animals, cultural resources, and cave resources have been described herein, elsewhere in the contract, or designated on the ground.

B6.3 Control of Operations. Under this contract, "Contractor's Operations" shall include activities of or use of equipment of Contractor, Contractor's employees, agents, Subcontractors, or their employees or agents, acting in the course of their employment in operations hereunder on National Forest lands or within Forest Service protection boundary (unless acting under the immediate supervision of Forest Service).

Contractor's Operations shall be conducted in a workmanlike and orderly manner. The timing of required Forest Service designation of work on the ground and the performance of other Forest Service work shall not be such as to cause unnecessary delay to Contractor.

B6.31 Operating Schedule. Contractor shall, before commencing operations, provide in writing an annual Operating Schedule of anticipated major activities and needs for logging Included Timber and completing stewardship projects, such as logging, road maintenance, Scaling, and road construction, including construction staking under B5.212 and material delivery under B5.22. Upon reasonable notice to Forest Service, such schedule shall be subject to modifications necessitated by weather, markets, or other unpredictable circumstances.

Subject to B6.6 and when the requirements of B6.66 are met, Contractor's Operations may be conducted outside Normal Operating Season. "Normal Operating Season" is the period(s) beginning and ending on the dates stated in A16 of any year.

B6.311 Inclusion of Technical Proposal. Upon execution of the contract, all elements of the Technical Proposal accepted by Forest Service become binding parts of the contract, including, but not limited to, planned periods for and methods of road construction, timber harvesting, performance of stewardship projects, slash disposal, erosion control measures, and other contractual requirements. In addition, Contractor may not substitute a Subcontractor that has been accepted in the Technical Proposal with an alternate Subcontractor, unless Contracting Officer agrees to substitution.

Contractor may revise this Technical Proposal when necessitated by weather, markets, or other unforeseen circumstances beyond the Contractor's control, subject to approval of Contracting Officer. In the event of delays beyond the control of Contractor that qualify for Contract Term Adjustment, the Technical Proposal shall be adjusted by mutual agreement to accommodate the adjusted contract period.

B6.312 Plan of Operations for Road Construction. Annually, prior to start of construction, Contractor shall submit a supplement to the Technical Proposal that shall include a schedule of proposed progress and a description of planned measures to be taken to provide erosion control for work in progress, including special measures to be taken on any segments of construction not Substantially Completed prior to periods of seasonal precipitation or runoff. Contractor shall submit a revised schedule when Contractor proposes a significant deviation from the progress schedule.

Prior to beginning construction on any portion of Specified Roads identified as sensitive on Plans, Contractor and Forest Service shall agree on proposed method of construction.

B6.32 Protection of Residual Trees. Contractor's Operations shall not unnecessarily damage young growth or other trees to be reserved.

B6.33 Safety. Contractor's Operations shall facilitate Forest Service's safe and practical inspection of Contractor's Operations and conduct of other official duties on Contract Area. Contractor has all responsibility for compliance with safety requirements for Contractor's employees.

In the event that Contracting Officer identifies a conflict between the requirements of this contract or agreed upon methods of proceeding hereunder and State or Federal safety requirements, the contract shall be modified and Contractor may request an adjustment in Current Contract Rates to compensate for the changed conditions.

Unless otherwise agreed in writing, when Contractor's Operations are in progress adjacent to or on Forest Service controlled roads and trails open to public travel, Contractor shall furnish, install, and maintain all temporary traffic controls that provide the user with adequate warning of hazardous or potentially hazardous conditions associated with Contractor's Operations. Contractor and Forest Service shall agree to a specific Traffic Control Plan for each individual project prior to commencing operations. Devices shall be appropriate to current conditions and shall be covered or removed when not needed. Except as otherwise agreed, flagmen and devices shall be as specified in the "Manual on Uniform Traffic Control Devices for Streets and Highways" (MUTCD) and as shown on Plans, Contract Area Map, Traffic Control Plan, or in specifications attached hereto.

B6.34 Sanitation and Servicing. Contractor shall take all reasonable precautions to prevent pollution of air, soil, and water by Contractor's Operations. If facilities for employees are established on Contract Area, they shall be operated in a sanitary manner. In the event that Contractor's Operations or servicing of equipment result in pollution to soil or water, Contractor shall conduct cleanup and restoration of the polluted site to the satisfaction of Forest Service.

Contractor shall maintain all equipment operating on Contract Area in good repair and free of abnormal leakage of lubricants, fuel, coolants, and hydraulic fluid. Contractor shall not service tractors, trucks, or other equipment on National Forest lands where servicing is likely to result in pollution to soil or water. Contractor shall furnish oil-absorbing mats for use under all stationary equipment or equipment being serviced to prevent leaking or spilled petroleum-based products from contaminating soil and water resources. Contractor shall remove from National Forest lands all contaminated soil, vegetation, debris, vehicle oil filters (drained of free-flowing oil), batteries, oily rags, and waste oil resulting from use, servicing, repair, or abandonment of equipment.

B6.341 Prevention of Oil Spills. If Contractor maintains storage facilities for oil or oil products on Contract Area, Contractor shall take appropriate preventive measures to ensure that any spill of such oil or oil products does not enter any stream or other waters of the United States or any of the individual States.

If the total oil or oil products storage exceeds 1,320 gallons in containers of 55 gallons or greater, Contractor shall prepare a Spill Prevention Control and Countermeasures Plan. Such plan shall meet applicable EPA requirements (40 CFR 112), including certification by a registered professional engineer.

Contractor shall notify Contracting Officer and appropriate agencies of all reportable (40 CFR 110) spills of oil or oil products on or in the vicinity of Contract Area that are caused by Contractor's employees, agents, Subcontractors or their employees or agents, directly or indirectly, as a result of Contractor's Operations. Contractor will take whatever initial action may be safely accomplished to contain all spills.

B6.342 Hazardous Substances. Contractor shall notify the National Response Center and Contracting Officer of all releases of reportable quantities of hazardous substances on or in the vicinity of Contract Area that are caused by Contractor's employees, agents, Subcontractors or their employees or agents, directly or indirectly, as a result of Contractor's Operations, in accordance with 40 CFR 302.

B6.35 Equipment Cleaning. (a) Areas, known by Forest Service prior to contract advertisement, that are infested with invasive species of concern are shown on Contract Area Map. A current list of invasive species of concern and a map showing the extent of known infestations is available at the Forest Supervisor's Office.

(b) Contractor shall not move any Off-Road Equipment, which last operated in an area that is infested with one or more invasive species of concern onto Contract Area without having first taken reasonable measures to make each such piece of equipment free of soil, seeds, vegetative matter, or other debris that could contain or hold seeds. Contractor shall identify the location of the equipment's most recent operations. If the prior location of the Off-Road Equipment cannot be identified, Forest Service will assume that it is infested with seeds of invasive species of concern. In addition, prior to moving Off-Road Equipment from an area on this contract that is shown on Contract Area Map to be infested with invasive species of concern to any other area that is indicated on Contract Area Map as being free of invasive species of concern, Contractor shall again take reasonable measures to make each such piece of equipment free of soil, seeds, vegetative matter, or other debris that could contain or hold seeds.

(c) Contractor must advise Forest Service of measures taken to clean Off-Road Equipment and arrange for Forest Service inspection prior to such equipment being placed in service or moved from areas infested with invasive species of concern to areas that are free of such invasive species. Forest Service shall have 2 days, excluding weekends and Federal holidays, to inspect equipment after it has been made available for inspection. After inspection or after 2 days, Contractor may proceed with operations. Reasonable measures shall not require the disassembly of equipment components or use of any specialized inspection tools. Equipment shall be considered free of soil, seeds, and other such debris when a visual inspection does not disclose such material.

(d) "Off-Road Equipment" includes all logging and construction machinery, except for log trucks, chip vans, service vehicles, water trucks, pickup trucks, cars, and similar vehicles.

(e) If Contractor desires to clean Off-Road Equipment on National Forest land, such as at the end of a project or prior to moving to a new area that is free of invasive species of concern, Contractor and Forest Service shall agree on locations for the cleaning and control of off-site impacts, if any.

(f) New infestations of invasive species of concern to Forest Service, identified by either Contractor or Forest Service on Contract Area, shall be promptly reported to the other party and operations shall be delayed or interrupted at that location, under B8.33, until Contractor and Forest Service agree on treatment methods.

(g) Nothing in this Subsection shall be interpreted as creating any warranty that all locations of invasive species of concern have been described herein, elsewhere in the contract, or designated on the ground.

B6.36 Acceptance of Work. Upon Contractor's written request and assurance that work has been completed, Forest Service shall perform an inspection within 5 days, excluding weekends and Federal holidays, so as not to delay unnecessarily the progress of Contractor's Operations. Such a request may be for acceptance of:

(a) Any reasonable portion of Specified Road listed in the Schedule of Items;

(b) Specific requirements on a subdivision of Contract Area (such as logging, stewardship project operations, slash disposal, erosion control, or snag felling); or

(c) All contract requirements on a subdivision of Contract Area.

Forest Service may perform such inspections without request from Contractor.

Within 2 days of inspection, excluding weekends and Federal holidays, Forest Service shall furnish Contractor with written notice either of acceptance or of work remaining to be done.

In the event that Forest Service is unable to make such inspection within 5 days of Contractor's request, Contractor shall be notified in writing of necessity for postponement and time when inspection can be made. The same final approval procedure shall be used at the end of Contractor's construction period on any completed portion of road.

When all contractual work of Contractor has been accepted for any subdivision of Contract Area or cutting unit or stewardship project area identified on Contract Area Map, such area shall be eliminated from Contract Area on written notice of either party to this contract, unless such area is a portion of a larger work area. In the latter circumstance, such area may be eliminated only by agreement.

B6.361 Acceptance of Specified Roads. Specified Road work may be accepted subject to completion of clearing work that does not affect the road structure when completion is delayed for reasons beyond control of Contractor, such as adverse weather.

Specified Road work may be accepted subject to completion of planting and seeding for soil stabilization when completion is delayed for reasons beyond control of Contractor, such as seasonal limitations. Contractor shall complete planting or seeding on such road during the next suitable planting season.

Specified Road work may be conditionally accepted prior to the application of dust palliatives when application is not necessary to prevent dusting of the road surface due to climatic conditions. Contractor shall apply dust palliative on such roads prior to use during periods when dusting may occur.

Prior to request for final inspection, Specified Road work, roadways, borrow pits, and quarries, occupied and no longer needed by Contractor in connection with Contractor's Operations, shall be cleared of all rubbish, excess materials, and temporary structures.

B6.4 Conduct of Logging. Unless otherwise specifically provided herein, Contractor shall fell trees designated for cutting and shall remove the portions that meet Utilization Standards, as provided in B2.2, prior to acceptance of subdivision for completion of logging and stewardship projects under B6.36. Forest Service may make exceptions for occasional trees inadvertently not cut or trees or pieces not removed for good reason, including possible damage to forest resources or gross economic impracticability at the time of removal of other timber. Logging shall be conducted in accordance with the following, unless C6.4# provisions set forth requirements to meet special or unusual logging conditions:

B6.41 Felling and Bucking. Felling shall be done to minimize breakage of Included Timber and damage to residual timber. Unless agreed otherwise, felling shall be done by saws or shears. Bucking shall be done to permit removal of all minimum pieces set forth in A2. Contractor may buck out cull material when necessary to produce pieces meeting Utilization Standards. Such bucked out material shall contain a minimum amount of sound wood, not in excess of the net scale in percentage of gross scale, or based on the merchantability factor, whichever is stated in A2. If necessary to assess extent of defect, Contractor shall make sample saw cuts or wedges.

B6.411 Felling in Clearings. Insofar as ground conditions, tree lean, and shape of clearings permit, trees shall be felled so that their tops do not extend outside Clearcutting Units, construction clearings, and areas of regeneration cutting.

B6.412 Stump Heights. Stumps shall not exceed, on the side adjacent to the highest ground, the maximum heights set forth in A6, except that occasional stumps of greater heights are acceptable when Contractor determines that they are necessary for safe and efficient conduct of logging. Unless otherwise agreed, Contractor shall re-cut high stumps so they will not exceed heights specified in A6 and shall dispose of severed portions in the same manner as other logging debris. The stump heights shown in A6 were selected with the objective of maximum reasonable utilization of the timber, unless Contract Area Map shows special areas where stump heights are lower for aesthetic, land treatment, or silvicultural reasons.

B6.413 Bucking Lengths. Trees shall be bucked in various lengths to obtain the greatest utilization of material meeting Utilization Standards.

B6.414 Limbing. When Forest Service determines it is necessary to minimize damage to the residual stand during skidding, Contractor shall cut exposed limbs from products prior to skidding. Contractor may leave uncut those limbs that cannot be cut with reasonable safety.

B6.42 Skidding and Yarding. Methods of skidding or yarding specified for particular areas, if any, are indicated on Contract Area Map. Outside Clearcutting

Units and construction clearings, insofar as ground conditions permit, products shall not be skidded against reserve trees or groups of reproduction and tractors shall be equipped with a winch to facilitate skidding.

B6.421 Rigging. Insofar as practicable, needed rigging shall be slung on stumps or trees designated for cutting.

B6.422 Landings and Skid Trails. Location of all landings, tractor roads, and skid trails shall be agreed upon prior to their construction. The cleared or excavated size of landings shall not exceed that needed for efficient skidding and loading operations.

B6.423 Skidding on Roads. Products may be skidded on permanent roads authorized for hauling under B5.12 only by prior written agreement.

B6.424 Arches and Dozer Blades. Unless otherwise specified in C6.424#, skidding tractors equipped with pull-type arches or dozer blades wider than tractor width or C-frame width, whichever is greater, shall not be used in residual timber outside Clearcutting Units and other authorized clearings, except on constructed tractor roads or landings, unless there is written agreement that residual timber will not be damaged materially by such use.

B6.5 Streamcourse Protection. "Streamcourses" that are subject to provisions of this Section are shown on Contract Area Map. Unless otherwise agreed, the following measures shall be observed to protect Streamcourses:

(a) Contractor's Operations shall be conducted to prevent debris from entering Streamcourses, except as may be authorized under paragraph (d). In event Contractor causes debris to enter Streamcourses in amounts that may adversely affect the natural flow of the stream, water quality, or fishery resource, Contractor shall remove such debris as soon as practicable, but not to exceed 2 days, and in an agreed manner that will cause the least disturbance to Streamcourses.

(b) Culverts or bridges shall be required on Temporary Roads at all points where it is necessary to cross Streamcourses. Such facilities shall be of sufficient size and design and installed in a manner to provide unobstructed flow of water and to minimize damage to Streamcourses. Trees or products shall not be otherwise hauled or yarded across Streamcourses unless fully suspended.

(c) Wheeled or track-laying equipment shall not be operated in Streamcourses, except at crossings designated by Forest Service or as essential to construction or removal of culverts and bridges.

(d) Flow in Streamcourses may be temporarily diverted only if such diversion is necessary for Contractor's planned construction and Forest Service gives written authorization. Such flow shall be restored to the natural course as soon as practicable and, in any event, prior to a major storm runoff period or runoff season.

B6.6 Erosion Prevention and Control. Contractor's Operations shall be conducted reasonably to minimize soil erosion. Equipment shall not be operated when ground conditions are such that excessive damage will result. Contractor shall adjust the kinds and intensity of erosion control work done to ground and weather conditions and the need for controlling runoff. Erosion control work shall be kept current immediately preceding expected seasonal periods of precipitation or runoff.

If Contractor fails to do seasonal erosion control work prior to any seasonal period of precipitation or runoff, Forest Service may temporarily assume responsibility for the work and any unencumbered deposits hereunder may be used by Forest Service to do the work. If needed for such work, Contractor shall make additional deposits on request by Forest Service. Any money deposited or used for this purpose shall be treated as cooperative deposits under B4.218.

B6.61 Meadow Protection. Reasonable care shall be taken to avoid damage to the cover, soil, and water in meadows shown on Contract Area Map. Vehicular or skidding equipment shall not be used on meadows, except where roads, landings, and tractor roads are approved under B5.1 or B6.422. Unless otherwise agreed, trees felled into meadows shall be removed by endlining. Resulting logging slash shall be removed where necessary to protect cover, soil, and water.

B6.62 Wetlands Protection. Wetlands requiring protection under Executive Order 11990 are shown on Contract Area Map. Vehicular or skidding equipment shall not be used in such wetlands, except where roads, landings, and tractor roads are approved under B5.1 or B6.422. Additional measures needed to protect such areas are provided in C6.62#.

B6.63 Temporary Roads. As necessary to attain stabilization of roadbed and fill slopes of Temporary Roads, Contractor shall employ such measures as outsloping, drainage dips, and water-spreading ditches.

After a Temporary Road has served Contractor's purpose, Contractor shall give notice to Forest Service and shall remove bridges and culverts, eliminate ditches, outslope roadbed, remove ruts and berms, effectively block the road to normal vehicular traffic where feasible under existing terrain conditions, and build cross ditches and water bars, as staked or otherwise marked on the ground by Forest Service. When bridges and culverts are removed, associated fills shall also be removed to the extent necessary to permit normal maximum flow of water.

B6.631 Temporary Roads to Remain Open. To maintain short term access to portions of Contract Area for post-contract treatments and other purposes after a Temporary Road has served Contractor's purpose, pursuant to B6.63, Contractor agrees, that on Temporary Roads designated on Contract Area Map as "Remain Open," to construct cross ditches and

water bars, as designated, staked, or otherwise directed by Forest Service, that can be traversed by a normal two-wheel drive pickup truck. On "Remain Open" Temporary Roads, all bridges and culverts shall remain in place and ditches shall not be eliminated. All drainage structures shall be left in functional condition.

B6.64 Landings. After landings have served Contractor's purpose, Contractor shall ditch and slope them to permit water to drain or spread. Unless agreed otherwise, cut and fill banks around landings shall be sloped to remove overhangs and otherwise minimize erosion.

B6.65 Skid Trails and Fire Lines. Contractor shall construct cross ditches and water-spreading ditches on tractor roads and skid trails, where staked or otherwise marked on the ground by Forest Service. Forest Service shall designate cross ditching on Contractor-built fire lines prior to or during construction. By agreement, Contractor may use other comparable erosion control measures, such as backblading skid trails, in lieu of cross ditching.

B6.66 Current Operating Areas. Where logging, road construction, or other stewardship project work is in progress but not completed, unless agreed otherwise, Contractor shall, before operations cease annually, remove all temporary log culverts and construct temporary cross drains, drainage ditches, dips, berms, culverts, or other facilities needed to control erosion.

Such protection shall be provided, prior to end of a Normal Operating Season, for all disturbed, unprotected ground that is not to be disturbed further prior to end of operations each year, including roads and associated fills, tractor roads, skid trails, and fire lines. When weather permits operations after Normal Operating Season, Contractor shall keep such work on any additional disturbed areas as up to date as practicable.

B6.67 Erosion Control Structure Maintenance. During the period of this contract, Contractor shall provide maintenance of soil erosion control structures constructed by Contractor until they become stabilized, but not for more than 1 year after their construction. Contracting Officer may agree to perform such structure maintenance under B4.218, if requested by Contractor, subject to agreement on rates. Contractor shall not be responsible for repair of such structures damaged by other National Forest users whose activities are not a part of Contractor's Operations.

B6.7 Slash Disposal. Contractor's timing of product removal and preparatory work shall not unnecessarily delay slash disposal. Specific slash disposal measures to be employed by Contractor are stated in C6.7# and are in addition to Required Deposits for slash disposal.

B6.8 Scaling. "Scaling," as used herein, involves:

(a) Various volume determination methods, such as log rule, sampling, measuring, linear measuring, counting, weighing, or another method or combination of methods;

(b) Various sites, such as truck Scaling stations, rollways, weighing stations, woods landings, water Scaling stations, or other sites; and

(c) Various geographic locations.

B6.81 Scaling Services. Scaling services shall be performed by Forest Service personnel or parties under contract to Forest Service, except that weighing services may be performed by personnel or parties approved by Forest Service. Scaling shall be provided in accordance with the instructions and specifications in A9. Scalers shall be currently certified to perform accurate Scaling services. The Scaling services provided shall be selected exclusively by Forest Service.

Scaling services may be Continuous, Intermittent, or Extended. "Continuous Scaling Services" is Scaling at one site five (5) 8-hour shifts a week, exclusive of Sundays and Federal holidays. "Intermittent Scaling Services" are non-continuous Scaling services. "Extended Scaling Services" are Scaling services exceeding Continuous Scaling Services and may include Sundays and designated Federal holidays.

Upon written request of Contractor and approval of Contracting Officer, Forest Service may provide other services, such as but not limited to grading, tagging, or marking of Scaled logs.

B6.811 Scaling Location. Forest Service shall provide Scaling services at the Scaling site(s) shown in A10. The Scaling site(s) shown in A10 normally will be a non-exclusive site where more than one National Forest contractor may be served.

Contractor may request, in writing, an alternate Scaling site, such as at a private mill yard, private truck ramp, or a privately operated log transfer facility. Contracting Officer may approve an alternate Scaling site, when Contracting Officer determines that Scaling conditions at an alternate site are acceptable. Such conditions shall include at a minimum:

(a) Scaler safety and comfort,

(b) Product accountability and security,

(c) Facilities and practices conducive to accurate and independent Scaling, and

(d) The ability to provide for remote check Scaling.

Upon approval of an alternate Scaling site, Forest Service and Contractor shall enter into a written memorandum of agreement governing Scaling at that alternate location. Contractor agrees that Forest Service personnel or persons under contract with Forest Service shall perform Scaling services at an alternative Scaling site. In no instance shall Contractor or employees of Contractor perform Scaling services.

B6.812 Scaling Adjustments. Forest Service shall check the accuracy of the Scaling performed on National Forest logs. Scaling will be satisfactory if performed within the accuracy standards stated in governing instructions identified in A9. In the event Forest

Service check Scale(s) shows a variance in net Scale in excess of the allowable variance, an adjustment to volume reported Scaled may be made by Forest Service.

Such adjustment will be based on the difference between Forest Service check Scale(s) and original Scale for contract volume Scaled within the adjustment period. The volume to which this difference will be applied will be:

(a) One-half of the volume Scaled between the last satisfactory check Scale and the first unsatisfactory check Scale or, if a period of 120 days or more occurs without Scaling National Forest timber for stumpage, the adjustment will be applied to 100 percent of the volume Scaled after this period and

(b) 100 percent of the volume Scaled between unsatisfactory check Scales and

(c) One-half of the volume Scaled between the last unsatisfactory check Scale and the next satisfactory check Scale, or if no satisfactory check Scale is completed and a period of 120 days or more occurs without Scaling of National Forest timber for stumpage, the adjustment will be applied to 100 percent of the volume Scaled since the last unsatisfactory check Scale.

Adjustments may increase or decrease the original Scaled volume. Adjustments will be applied to Integrated Resource Account to correct charges for Included Timber, plus deposits, Scaled during the adjustment period.

B6.813 Delayed or Interrupted Scaling Services. In the event Scaling services are delayed or interrupted, Contractor shall discontinue hauling. Contractor agrees that in the event such a delay or interruption occurs for reasons not caused by Contractor, its sole and exclusive remedy shall be:

(a) Contract Term Adjustment and

(b) Out-of-Pocket Expenses incurred as a direct result of the delay or interruption of Scaling services under this Item.

Contractor further agrees that no logs will be presented for Scaling outside agreed upon Scaling services schedule.

B6.814 Weighing Services. Weighing services for stumpage payment purposes may be provided by either public or privately owned and operated weighing facilities. A "Weighing Services Agreement," approved by the Forest Supervisor, must be executed at each weighing facility providing weighing services.

Scales used to weigh National Forest products for payment purposes must be a currently certified scale in accordance with State law and be capable of weighing the entire load of logs in a single operation. The weighing of less than the entire load or weighing two loads at once is prohibited. Unless otherwise agreed, the minimum sized weighing facility shall be a 60-ton capacity scale with a 10 foot by 70 foot platform or larger. The weighmaster must work in a position where it is possible to verify that the truck wheels are on or off the scales.

Weighing facilities shall meet the following minimum requirements:

(a) Be an electronic design,

(b) Use electronic load cells or have a fully enclosed and sealed weigh-beam,

(c) Have digital weight meters sealed with a seal approved by the State,

(d) Have a zero interlocking device on the printer,

(e) Have an automatic zero-setting mechanism,

(f) Have an automatic motion-detecting device,

(g) Be shielded against radio or electromagnetic interference, and

(h) Have a date and time stamp and gross and tare weights that print electronically with each weighing. Contracting Officer may waive electronic printing for public or third party weighing facilities.

Contractor shall bear all charges or fees for weighing services.

B6.82 Presentation for Scaling. Contractor shall present products so that they may be Scaled in an economical and safe manner. If prior to Scaling, Included Timber is to be mixed with other timber, Contractor shall, prior to mixing, provide for distinguishing, by means approved by Forest Service, each product included in this contract.

Trees or pieces presented for Scaling that have not been bucked to separate material meeting minimum piece standards from material not meeting minimum piece standards due to diameter, shall be Scaled as though such bucking had been done.

Deductions made for rot, check, or other defects resulting from abnormal delay in Scaling caused by Contractor shall be recorded separately and charged to Integrated Resource Account under B3.47.

Any timber that has been removed from Contract Area during the period of this contract, but remains unscaled after Termination Date, shall be Scaled at the earliest reasonable date.

B6.83 Scaling Other Products. The Scaled volume of material presented for Scaling in forms other than those stated in A2, when appropriate, shall be converted to the A2 unit of measure by the application of standard converting factors and procedures in effect at the time the contract was sold. Other converting factors may be used by written agreement.

B6.84 Accountability. When Scaling is performed away from Contract Area, products shall be accounted for in accordance with Forest Service written instructions or an Accountability Agreement between Forest Service and Contractor and as follows:

(a) Contractor shall plainly mark or otherwise identify products prior to hauling in accordance with B6.842;

(b) Forest Service shall issue removal receipts to Contractor;

(c) Contractor shall assign a competent individual at the landing to complete removal receipts and attach them to each load of products removed from Contract Area;

(d) Removal receipts shall be returned to Forest Service at periodic intervals;

(e) When products are in transit, the truck driver shall possess or display removal receipt and show it upon request as evidence of authority to move products;

(f) The scaler's portion of removal receipt shall be surrendered at point of Scaling, the unloading point, or as requested by Forest Service; and

(g) Contractor shall notify Forest Service of lost or off-loaded logs and their location within 12 hours of such loss.

Contractor shall not place products in storage for deferred Scaling until an accountability system has been agreed to in writing for a stated period.

B6.841 Route of Haul. As part of the annual Operating Schedule, Contractor shall furnish a map showing the route of haul over which unscaled products will be transported from Contract Area to the approved Scaling location. Such route of haul shall be the shortest, most economical haul route available between the points.

Upon advance written agreement, other routes may be approved. All unscaled products removed from Contract Area shall be transported over the designated routes of haul. Contractor shall notify Forest Service when a load of products, after leaving Contract Area, will be delayed for more than 12 hours in reaching Scaling location.

Contractor shall require truck drivers to stop, if requested by Forest Service, for the following reasons:

(a) For accountability checks when products are in transit from Contract Area to the designated Scaling location or

(b) For a remote check Scale when products are in transit after being truck Scaled at the designated Scaling location.

Contractor and Forest Service shall agree to locations for accountability checks and remote check Scales in advance of haul. Such locations shall be established only in areas where it is safe to stop trucks.

Forest Service shall notify Contractor of the methods to be used to alert truck drivers of an impending stop.

B6.842 Product Identification. Before removal from Contract Area, unless Contracting Officer determines that circumstances warrant a written waiver or adjustment, Contractor shall:

(a) Hammer brand all products that are eight (8) feet or more in length and one-third (1/3) or more sound, on each end that is seven (7) inches or more in diameter.

(b) West of the 100th meridian, paint with a spot of highway-yellow paint all domestic processing products that are eight (8) feet or more in length and one-third (1/3) or more sound, on each end that is seven (7) inches or more in diameter. Each paint spot must be not less than three (3) square inches in size.

Contracting Officer shall assign brands and, if Contract Area is within a State that maintains a log brand register, brands shall be registered with the State. Contractor shall use assigned brand exclusively on logs from this contract until Contracting Officer releases brand. Contractor will furnish and apply highway-yellow paint of a lasting quality (oil-base or equivalent).

All hammer brands and/or highway-yellow paint must remain on logs until they are domestically processed. Contractor shall replace identifying marks if they are lost, removed, or become unreadable. Contractor may remanufacture products into different log lengths. Except for logs remanufactured as part of the mill in-feed process immediately before processing, remanufactured products must be rebranded with the assigned contract brand and repainted with highway-yellow paint, unless otherwise agreed to in writing by Contracting Officer. For such remanufactured products, Contracting Officer may approve use of a brand to be used exclusively as a catch brand, in lieu of the assigned contract brand.

B6.85 Scaling Lost Products. The volume of lost products shall be determined by the best methods currently available, using data from the records for the period in which the loss occurred or the most applicable period if loss should occur substantially after cutting. In the absence of specific information indicating size or species of lost products, species distribution and volume for entire truckloads shall be assumed to be the same as the average volume Scaled per truck during the report period, and for individual products it shall be assumed that the volume and species were the average volume of the highest priced species Scaled during the report period.

B6.851 Scaling Lost Sample Loads. If Scaling is being done by sampling loads of logs, Contractor shall present such sample loads for Scaling by Forest Service. If loads of logs selected to be sample Scaled are placed in the decks before they are Scaled, they will be considered as lost sample loads. It will be difficult, if not impossible, to determine the volume and species contained in such loads for payment purposes. Therefore, lost sample loads will be deemed to have a Scale volume and species composition equal to that of the highest value load Scaled during the sampling period, as established by Forest Service. If no sample loads were Scaled during the period, the Scale data for the high valued load will be taken from the most current preceding sampling period with Scale. Sample loads lost as a result of Forest Service actions shall be treated as non-Scaled loads.

B6.86 Scale Reports. Forest Service shall provide Contractor a copy of Forest Service scaler's record, if requested in writing.

B6.9 Stewardship Projects. Performance of stewardship projects shall be in accordance with the specifications in C6.9#.

All of the mandatory stewardship projects, as shown in A4c, shall be performed. Optional stewardship projects, as shown in A4c, shall be performed when authorized in writing by Contracting Officer. Such authorization may be for all or a portion of the quantity shown. Optional stewardship projects may be selected and authorized in any order by the Contracting Officer. Upon written request of Contractor, additional optional stewardship projects shall be authorized; however, Contracting Officer shall not be obligated to authorize additional stewardship projects if three or more authorized optional stewardship projects or any of the mandatory stewardship projects remain uncompleted. Contracting Officer shall not be obligated to authorize additional optional stewardship projects at any time if Contracting Officer determines that there is insufficient value of remaining designated timber to cover the value of additional stewardship projects.

B7.0—FIRE PRECAUTIONS AND CONTROL

B7.1 Plans. Prior to initiating Contractor's Operations during Fire Precautionary Period, Contractor shall file with Forest Service a Fire Prevention and Control Plan providing for the prevention and control of fires on Contract Area and other areas of Contractor's Operations. Such plan shall include a detailed list of personnel and equipment at Contractor's disposal for implementing the plan. This requirement may be met by preparing a single plan for more than one contract.

B7.2 Fire Precautions. Specific fire precautionary measures listed in C7.2# shall be applicable during Contractor's Operations in "Fire Precautionary Period" described in A12. Contracting Officer may change the dates of Fire Precautionary Period by advance written notice, if justified by unusual weather or other conditions. Required tools and equipment shall be kept in serviceable condition and immediately available for fire fighting at all times during Contractor's Operations in Fire Precautionary Period.

B7.21 Substitute Precautions. Forest Service may authorize substitute measures or equipment, or waive specific requirements by written notice, if substitute measures or equipment will afford equal protection or some of the required measures and equipment are unnecessary.

B7.22 Emergency Precautions. Forest Service may require the necessary shutting down of equipment on portions of Contractor's Operations, as specified by the emergency fire precautions schedule of C7.22#. Under such conditions, after Contractor ceases active operations, Contractor shall release for hire by Forest Service, if needed, Contractor's shutdown equipment for fire standby on Contract Area or other areas of Contractor's Operations and personnel for fire standby or fire patrol, when such personnel and equipment are not needed by Contractor for other fire fighting or protection from fire. Equipment shall be paid for at fire fighting equipment rates common in the area or at prior agreed rates and, if Contractor requests, shall be operated only by personnel approved by Contractor. Personnel so hired shall be subject to direction and control by Forest Service and shall be paid by Forest Service at fire fighting rates common in the area or at prior agreed rates.

B7.3 Fire Control. Contractor shall, both independently and in cooperation with Forest Service, take all reasonable and practicable action to prevent and suppress fires resulting from Contractor's Operations and to suppress any forest fire on Contract Area. Contractor's independent initial fire suppression action on such fires shall be immediate and shall include the use of all necessary personnel and equipment at Contractor's disposal on Contract Area or within the distance of Contract Area stated in A13.

B7.31 Contractor's Reinforcement Obligations. Whenever an Operations Fire or Negligent Fire, whether on or off Contract Area, or any other forest fire on Contract Area, has not been suppressed by initial action and appreciable reinforcement strength is required, Forest Service may require further actions by Contractor until such fire is controlled and mopped up to a point of safety. Such actions may include any or all of the following as necessary to fight such fire:

B7.311 Suspend Operations. To suspend any or all of Contractor's Operations.

B7.312 Personnel. To release for employment by Forest Service any or all of Contractor's personnel engaged in Contractor's Operations or timber processing within the distance of Contract Area stated in A13. Any organized crew so hired shall include Contractor's supervisor, if any. Personnel so employed shall be paid at Forest Service standard emergency fire fighting rates.

B7.313 Equipment. To make available for Forest Service rental at fire fighting equipment rates common in the area or at prior agreed rates any or all of Contractor's equipment suitable for fire fighting and currently engaged in Contractor's Operations within the distance of Contract Area stated in A13. Equipment shall be operated only by personnel approved by Contractor, if so requested by Contractor.

B7.4 Fire Suppression Costs. Contractor's obligations for cost of fire suppression vary according to three classifications of fires as follows:

B7.41 Operations Fire. An "Operations Fire" is a fire caused by Contractor's Operations other than a Negligent Fire.

Forest Service, except as provided in B7.3, shall use cooperative deposits under B4.218 to perform fire suppression activities on Operations Fires. Contractor agrees to reimburse Forest Service for such cost for each Operations Fire, subject to a maximum of the dollar amount stated in A14. The cost of Contractor's actions, supplies, and equipment on any such fire provided pursuant to B7.3, or otherwise at the request of Forest Service, shall be credited toward such maximum. If Contractor's actual cost exceeds Contractor's obligation stated in A14, Forest Service shall reimburse Contractor for the excess.

B7.42 Negligent Fire. A "Negligent Fire" is a fire caused by negligence or fault of Contractor's Operations, including, but not limited to, one caused by smoking by persons engaged in Contractor's Operations during the course of their employment, or during rest or lunch periods; or if Contractor's failure to comply with the requirements of B7.2 and B7.3 results in a fire starting or permits a fire to spread. Damages and the cost of suppressing Negligent Fires shall be borne by Contractor.

B7.43 Other Fires on Contract Area. Forest Service shall pay Contractor, at fire fighting rates common in the area or at prior agreed rates, for equipment or personnel furnished by Contractor pursuant to B7.3, or otherwise at the request of Forest Service, on any fire on Contract Area other than an Operations Fire or a Negligent Fire.

B7.5 State Law. Contractor shall not be relieved by the terms of this contract of any liability to the United States for fire suppression costs recoverable in an action based on State law, except for such costs resulting from Operations Fires. Amounts due Contractor for fire fighting expenditures in accordance with B7.41 shall not be withheld pending settlement of any such claim or action based on State law.

B7.6 Performance by Contractor. Where Contractor's employees, agents, contractors, Subcontractors, or their employees or agents perform Contractor's Operations in connection with fire responsibilities, Contractor's obligations shall be the same as if performance was by Contractor.

B8.0—OTHER CONDITIONS

B8.1 Title and Liability.

B8.11 Title Passage. All right, title, and interest in and to any Included Timber shall remain in Forest Service until it has been cut, Scaled, removed from Contract Area or other authorized cutting area, and paid for, at which time title shall vest in Contractor. For purposes of this Subsection, timber cut under cash deposit or payment guarantee under B4.3 shall be considered to have been paid for. Title to any Included Timber that has been cut, Scaled, and paid for, but not removed from Contract Area or other authorized cutting area by Contractor on or prior to Termination Date, shall remain in Forest Service.

B8.12 Liability for Loss. If Included Timber is destroyed or damaged by an unexpected event that significantly changes the nature of Included Timber, such as fire, wind, flood, insects, disease, or similar cause, the party holding title shall bear the timber value loss resulting from such destruction or damage; except that such losses after removal of timber from Contract Area, but before Scaling, shall be borne by Contractor at Current Contract Rates and Required Deposits. Deterioration or loss of value of salvage timber is not an unexpected event, except for deterioration due to delay or interruption that qualifies for Contract Term Adjustment or under B8.33.

In the event Included Timber to which Forest Service holds title is destroyed, Contractor will not be obligated to remove and pay for such timber. In the event Included Timber to which Forest Service holds title is damaged, Contracting Officer shall make an appraisal to determine for each species the difference between the appraised unit value of Included Timber immediately prior to the value loss and the appraised unit value of timber after the loss. Current Contract Rates in effect at the time of the value loss shall be adjusted by differences to become the redetermined rates.

There shall be no obligation for Forest Service to supply, or for Contractor to accept and pay for, other timber in lieu of that destroyed or damaged. This Subsection shall not be construed to relieve either party of liability for negligence.

B8.2 Period of Contract. All obligations of Contractor shall be discharged not later than "Termination Date" stated in A15, unless it is adjusted pursuant to B8.21 or B8.212 or extended pursuant to B8.23 or B8.32, excepting only those obligations for which Forest Service has given written permission to delay performance. Such written permission shall be considered a Contract Term Adjustment for the purpose of Contractor completing performance of obligations covered by such permission.

B8.21 Contract Term Adjustment. "Contract Term Adjustment" means adjustment only as provided for in the three circumstances described in this Subsection. Under these circumstances, the contract term shall be adjusted in writing to include additional calendar days in one or more Normal Operating Seasons equal to the actual time lost, except as limited by paragraph (b) in this Subsection.

To qualify for such adjustment, Contractor shall give written notice of the lost time not later than 30 days after end of Normal Operating Season in which time was lost and at least 10 days before Termination Date. Contracting Officer shall make prompt written acknowledgment of such notice, indicating concurrence with the number of days in the notice or the number of days Forest Service considers as qualifying for the adjustment.

Lost portions of days shall be disregarded in computing time lost. The three circumstances qualifying for a Contract Term Adjustment are:

(a) Contractor experiences delay in starting scheduled operations or interruptions in active operations, either of which stops removal of Included Timber from Contract Area through curtailment in felling and bucking, yarding, skidding and loading, hauling, or road construction, as scheduled under B6.31, for 10 or more consecutive days during a Normal Operating Season due to causes beyond Contractor's control, including, but not limited to, acts of God, acts of the public enemy, acts of the Government, labor disputes, fires, insurrections, or floods.

(b) Causes described in paragraph (a) substantially affect the disposition or processing of Included Timber during Normal Operating Season through their effects on primary timber processing facilities, with a resulting delay of 60 days or more in use of such facilities. In such event, Contract Term Adjustment shall not extend for more than 12 consecutive months.

(c) (i) Contracting Officer requests Contractor, in writing, to delay or interrupt operations during the normal operating season for any purpose other than suspension under B4.4 or B9.3 or

(ii) Contractor suffers a delay or interruption of Contractor's Operations affecting skidding, yarding, and loading because of fire emergency closure ordered by Forest Service (or another agency in its behalf), and the total of such lost time is 10 or more days during any Normal Operating Season.

If Termination Date is adjusted, as described in this Subsection, and later extended under B8.23, the appraisal for the extension shall be made as of the unadjusted Termination Date, but the date on which the new rates become effective, if higher than Current Contract Rates immediately prior to Termination Date, shall be the adjusted Termination Date.

B8.211 Delay in Reconstruction of Processing Facilities. Notwithstanding the 12-month limitation in B8.21, if Contractor demonstrates a diligent effort has been made to replace primary timber processing facilities and that delays in doing so have been beyond Contractor's control, Contracting Officer may authorize Contract Term Adjustment up to a total of 24 months.

B8.212 Market-Related Contract Term Addition. The term of this contract may be adjusted when a drastic reduction in wood product prices has occurred in accordance with 36 CFR 223.52. The Producer Price Index used to determine when a drastic reduction in price has occurred is stated in A20. Contractor will be notified whenever the Chief determines that a drastic reduction in wood product prices has occurred. If the drastic reduction criteria specified in 36 CFR 223.52 are met for 2 consecutive calendar quarters, after contract award date, Contracting Officer will add 1 year to the contract term, upon Contractor's written request. For each additional consecutive quarter such a drastic reduction occurs, Contracting Officer will, upon written request, add an additional 3 months to the term during Normal Operating Season. Contracting Officer must receive Contractor's written request for a market-related contract term addition before the expiration of this contract.

The total amount of contract term addition is limited to the lesser of twice the length of the original contract or 3 years. The revised contract term may not exceed 10 years as a result of market-related contract term addition. Additional contract time may not be granted for those portions of the contract that have a required completion date or for those portions of the contract where Contracting Officer determines that the timber is in need of urgent removal or that timber deterioration or resource damage will result from delay.

B8.22 Termination for Catastrophe. In event of Catastrophic Damage, this contract may be modified under B8.32, following rate redetermination under B3.32, or terminated under this Subsection. Such termination shall not be considered a termination under B8.34.

B8.221 Termination by Contractor. This contract shall be terminated, upon election and written notice by Contractor, if Catastrophic Damage rate redetermination under B3.32 shows that the appraised weighted average Indicated Advertised Rate of all Included Timber remaining immediately prior to the catastrophe has been reduced through Catastrophic Damage by an amount equal to or more than the weighted average Current Contract Rate.

"Indicated Advertised Rates" are Forest Service estimates of fair market value of the timber.

B8.222 Termination by Forest Service. This contract may be terminated by written notice from Contracting Officer, if there is Catastrophic Damage and Contractor does not agree, under B8.32, within 30 days of receipt from Contracting Officer of contract modifications proposed to permit the harvest of the catastrophe-affected timber.

B8.23 Contract Term Extension. "Contract Term Extension" means an extension of the term of this contract, at the request of Contractor, under this Subsection. This Subsection does not obligate Contracting Officer to grant Contract Term Extension. An extension can only be granted when Contracting Officer has determined that Contractor has diligently performed under the terms of this contract and when such extension is determined to be in the best interest of Forest Service.

Contracting Officer may not grant Contractor's written request for Contract Term Extension, unless Contractor's Operations to date have been in reasonable compliance with contract terms and the approved Technical Proposal under B6.311 and all contractual requirements have been met by Contractor and accepted by

Forest Service in active stewardship project areas and on areas cut over at time of Contractor's request, except for areas where work is in progress at time of Contractor's request. Contractor's burning of current slash or seeding or planting for erosion control may be temporarily waived, if weather or other considerations make such work impractical.

Contract Term Extension shall not become effective unless the initial Extension Deposit required by B4.217 has been made by the effective date of any extension.

When such extension is made, Forest Service shall make an appraisal using standard Forest Service methods and appraisal data in effect 45 days prior to the original Termination Date. Bid Premium Rates shall be added to such appraised rates to establish Flat Rates or Tentative Rates for the extension period. In event rates so established would develop Current Contract Value immediately prior to such an extension that is less than Current Contract Value at that time, Flat Rates and Tentative Rates in effect immediately prior to extension shall be retained for the extension period.

B8.3 Contract Modification. The conditions of this contract are completely set forth in this contract. Except as provided in B8.32 and B8.33, this contract can be modified only by written agreement between the parties. Only Contracting Officer may make contract modifications, with compensating adjustments to Current Contract Rates where appropriate, on behalf of Forest Service.

B8.31 Changed Conditions. When it is agreed that the completion of certain work or other requirements hereunder would no longer serve the purpose intended because of substantial change in the physical conditions of Contract Area or Included Timber since the date of this contract, the requirements shall be waived in writing. The estimated cost of such waived work or other requirement shall be charged to Integrated Resource Account.

B8.32 Modification for Catastrophe. In event of Catastrophic Damage, Forest Service, in consultation with Contractor, shall outline on Contract Area Map:

(a) Any areas of catastrophe-affected live and dead timber meeting Utilization Standards and having undesignated timber so situated that it should be logged with the designated timber;

(b) If needed, any such areas where the damaged undesignated timber can reasonably be logged separately; and

(c) Areas of affected or unaffected timber that are to be eliminated from Contract Area.

Forest Service shall locate and post the boundaries of all such areas, as needed.

After Contract Area Map has been outlined under this Subsection, Forest Service may propose contract modification to permit the harvest of catastrophe-affected timber. If Contractor accepts Forest Service proposed modifications, this contract shall be modified to include rates redetermined under B3.32 and other related revisions as necessary, such as revision of Operating Schedule to ensure prompt removal of affected timber when necessary to avoid further loss and provision for additional contract time, if needed.

B8.33 Contract Suspension and Modification. (a) Contracting Officer may, by written order, delay or interrupt authorized operations under this contract or modify this contract, in whole or in part:

(i) To prevent environmental degradation or resource damage, including, but not limited to, harm to habitat, plants, animals, cultural resources, or cave resources;

(ii) To ensure consistency with land and resource management plans or other documents prepared pursuant to the National Environmental Policy Act of 1969, 42 USC 4321-4347;

(iii) To conduct environmental analysis, including, but not limited to, engaging in consultation pursuant to the Endangered Species Act of 1973, 16 USC 1531, *et seq.*; or

(iv) Upon agreement of the Regional Forester, due to administrative appeal or litigation, regardless of whether Contracting Officer's request is required by a court order or this contract is named in such a proceeding.

(v) Upon a change in law if performance of the contract, as determined by the Forest Service, would not be in compliance, in whole or in part, with such law.

(b) In the event of a request delaying or interrupting Contractor's Operations under this Subsection, Contractor's remedy shall be:

(i) Contract Term Adjustment,

(ii) reimbursement for Out-of-Pocket Expenses,

(iii) rate redetermination to measure any decline in the market pursuant to B3.33,

(iv) temporary reduction of downpayment pursuant to B4.22,

(v) temporary credit for unamortized Specified Road construction cost pursuant to B5.27, and

(vi) temporary bond reduction pursuant to B9.13.

(c) In addition to the compensation scheme set forth in subparagraph (b), Contractor may seek termination pursuant to B8.36 or, at any time prior to authorization to resume work suspended under this Subsection, demand termination under B8.34. If Contractor elects termination under B8.34 or B8.36, Contractor is nonetheless required, prior to contract termination, to fulfill all contract obligations for areas not affected by the delay or interruption under this Subsection and all compliance obligations for areas affected by the delay or interruption, including, but not limited to, erosion control, brush disposal, and road maintenance. To the extent Contractor is unable to fulfill such obligations, any

compensation due to Contractor will be reduced by the cost of completing the unfulfilled obligations, as determined by Contracting Officer. If Contractor seeks damages pursuant to subparagraph (b) and termination pursuant to this subparagraph, Contractor is not entitled to duplicative recovery of any damages.

(d) In cases of modification under this Subsection, Contractor shall receive a rate redetermination pursuant to B3.31.

(e) Contractor will only be eligible for the remedies listed in this Subsection if the delay or interruption occurs when operations were in progress or would have been proceeding, had there been no delay or interruption under this Subsection

(f) The applicability of this Subsection shall be unaffected by a finding during administrative appeal or litigation that this sale or a similarly situated sale was awarded or operated without properly complying with any statute, regulation, or policy.

B8.34 Contract Termination. (a) The Chief or the Chief's designee may unilaterally terminate this contract, in whole or in part, for any of the reasons set forth in paragraph (a) of B8.33.

(b) Contractor agrees that compensation for termination of this contract, in whole or in part, under this Subsection shall be: (i) refund or release of advanced deposits under B4.212 for timber cut but not removed, (ii) reimbursement for Out-of-Pocket Expenses, and (iii) one of the following, except when termination, pursuant to B8.33(v), is based upon a change of law which is public and general in nature: replacement volume under subparagraph (c) or liquidated damages under subparagraph (d).

(c) Forest Service and Contractor shall make good faith efforts to identify within Contract Area replacement timber of similar volume, quality, access, and topography. Stumpage price shall be adjusted under B3.31 to account for differences between replacement timber and timber deleted. If Forest Service and Contractor cannot reach agreement on satisfactory replacement volume or the proper stumpage of such timber, either party may opt to end the search and Contractor shall be compensated under paragraph (d) of this Subsection.

(d) Forest Service shall pay as fixed, agreed, and liquidated damages an amount equivalent to 15 percent of the estimated delivered log value of the volume of timber not harvested due to the termination or partial termination. Estimated delivered log value and volume of timber not harvested shall be determined by Contracting Officer as of Termination Date, using Forest Service methods in use as of Termination Date.

(e) When Contractor elects termination under this Subsection as a remedy for a delay or interruption pursuant to B8.33, Contractor shall only be entitled to damages pursuant to subparagraph (d) if the B8.33 delay or interruption is greater than one year, and the delay or interruption was not initially caused by wind, flood, earthquake, landslide, fire, forest pest epidemic, or other major natural phenomenon.

(f) In cases of partial termination under this Subsection, Contractor's sole and exclusive remedy for the remaining volume shall be a rate redetermination pursuant to B3.31.

(g) The applicability of this Subsection shall be unaffected by a finding during administrative appeal or litigation that this sale, or a similarly situated sale, was awarded or operated without properly complying with any statute, regulation, or policy.

(h) Contractor is required to fulfill all contract obligations not affected by a termination or partial termination under this Subsection. To the extent Contractor is unable to fulfill such obligations, any compensation due to Contractor will be reduced by the cost of completing the unfulfilled obligations, as determined by Contracting Officer.

B8.35 Out-of-Pocket Expenses. "Out-of-Pocket Expenses" are unrecovered expenditures arising directly from performing the contract that were rendered unrecovered due to delay, interruption, or termination pursuant to B8.33 or B8.34. An expenditure is unrecovered within the meaning of this Subsection where Contractor was precluded from gaining the benefit of the expenditure during a given period because operations were not permitted. Forest Service will reimburse Contractor only for the following Out-of-Pocket Expenses:

(a) Out-of-Pocket Expenses for maintenance of the contract performance and payment bonds during the period when operations were delayed or interrupted or, if terminated, from the date operations were halted until the expiration of the bonds;

(b) Out-of-Pocket Expenses for maintenance of the downpayment or other cash deposits during the period when operations were delayed or interrupted or, if terminated, from the date operations were halted until the cash is returned to Contractor;

(c) Out-of-Pocket Expenses for move-in and move-out;

(d) Out-of-Pocket Expenses for felling, bucking, lopping, skidding, yarding, and decking any products so processed, but not removed from Contract Area because: (i) the contract was terminated or (ii) the products no longer meet Utilization Standards because of delay or interruption;

(e) If terminated in whole or in part, Out-of-Pocket Expenses for unused Temporary Roads;

(f) Out-of-Pocket Expenses for the investment in Specified Roads during the period when operations were delayed or interrupted or, if terminated, in whole or in part, Out-of-Pocket Expenses for unamortized Specified Road construction and reconstruction; and

(g) If the contract is terminated, in whole or in part, Out-of-Pocket Expenses for bid preparation, including review of contract offering.

Contractor shall submit documentation of claimed expenditures and supporting analysis to Contracting Officer to assist in Contracting Officer's calculation of reimbursement. Expenses related to paragraphs (a), (b), and (g) may be based on interest at the Prompt Payment Rate established by the Secretary of the Treasury. Contracting Officer shall determine the amount of reimbursement under this Subsection using information from Contractor and/or Forest Service methods in use on the date that operations were delayed, interrupted, or terminated at Contracting Officer's sole discretion.

Contractor shall make all reasonable efforts to minimize Out-of-Pocket Expenses.

B8.36 Termination for Market Change. In the event of delay or interruption under B8.33 exceeding 90 days, this contract may be:

(a) Modified to include rates redetermined under B3.33 or

(b) Terminated upon election and written notice by Contractor, if a rate redetermination for market change under B3.33 shows that the appraised weighted average Indicated Advertised Rate of all Included Timber remaining immediately prior to the delay or interruption has been reduced through a market change by an amount equal to or more than the weighted average Current Contract Rate.

Contractor agrees that damages caused by termination of contract by either party will be limited to Out-of-Pocket Expenses.

B8.4 Performance by Other than Contractor. The acquisition or assumption by another party, under an agreement with Contractor, of any right or obligation of Contractor under this contract shall be ineffective as to Forest Service, until Forest Service has been notified of such agreement and Contracting Officer has given written approval. In no case shall such recognition or approval:

(a) Operate to relieve Contractor of the responsibilities or liabilities Contractor has assumed hereunder or

(b) Be given unless such other party:

(i) Is acceptable to Forest Service as a contractor of timber and assumes in writing all of the obligations to Forest Service under the terms of this contract as to the uncompleted portion thereof or

(ii) Acquires the rights in trust as security and subject to such conditions as may be necessary for the protection of the public interests.

B8.5 Sale of Other Materials. Forest Service reserves the right to sell from Contract Area during the period of this contract any materials or products not subject to its terms, but shall not permit removal, possession, or use thereof that will materially interfere with Contractor's Operations. Contractor shall not be obligated to do any work made necessary by the action of others.

B8.6 Provisions Required by Statute.

B8.61 Covenant against Contingent Fees. Contractor warrants that no person or agency has been employed or retained to solicit or secure this contract upon an agreement or understanding for a commission, percentage, brokerage, or contingent fee, excepting bona fide employees or bona fide established commercial agencies maintained by Contractor for the purpose of securing business. For breach or violation of this warranty, Forest Service shall have the right to annul this contract without liability or to require Contractor to pay, in addition to the contract price or consideration, the full amount of such commission, percentage, brokerage, or contingent fee.

B8.62 Officials Not to Benefit. No member of Congress or Resident Commissioner shall be admitted to any share or part of this contract or to any benefit that may arise there from, unless it is made with a corporation for its general benefit (18 USC 431, 433).

B8.63 Nondiscrimination in Employment. If the total value of this contract is in excess of $10,000, Contractor agrees during its performance as follows:

(a) Contractor will not discriminate against any employee or applicant for employment because of race, color, religion, sex, or national origin. Contractor will take affirmative action to ensure that applicants are employed, and that employees are treated during employment, without regard to their race, color, religion, sex, or national origin. Such action shall include, but not be limited to, the following: employment, upgrading, demotion, or transfer; recruitment or recruitment advertising; layoff or termination; rates of pay or other forms of compensation; and selection for training, including apprenticeship. Contractor agrees to post in conspicuous places, available to employees and applicants for employment, notices to be provided by Forest Service setting forth the provisions of this Subsection.

(b) Contractor will, in all solicitations or advertisements for employees placed by or on behalf of Contractor, state that all qualified applicants will receive consideration for employment without regard to race, color, religion, sex, or national origin.

(c) Contractor will send to each labor union or representative of workers with which Contractor has a collective bargaining agreement or other contract or understanding, a notice to be provided by Forest Service, advising the labor union or worker's representative of Contractor's commitments under this Subsection, and shall post copies of the notice in conspicuous places available to employees and applicants for employment.

(d) Contractor shall comply with all provisions of Executive Order No. 11246, as amended by Executive Order No. 11375 and Executive Order No. 12086, and the rules, regulations, and relevant orders of the Secretary of Labor.

(e) Contractor will furnish all information and reports required by Executive Order No. 11246, as amended, and by the rules, regulations, and orders of

the Secretary of Labor, or pursuant thereto, and will permit access to books, records, and accounts by Forest Service and the Secretary of Labor for purposes of investigation to ascertain compliance with such rules, regulations, and orders.

(f) In event of Contractor's noncompliance with this Subsection or with any of such rules, regulations, or orders, this contract may be terminated or suspended, in whole or in part, and Contractor may be declared ineligible for further Government contracts in accordance with procedures authorized in Executive Order No. 11246, as amended, and such other sanctions may be imposed and remedies invoked, as provided in Executive Order or by rule, regulation, or order of the Secretary of Labor, or as otherwise provided by law.

(g) Contractor will include the provisions of paragraphs (a) through (f) in every subcontract or purchase order unless exempted by rules, regulations, or orders of the Secretary of Labor issued pursuant to Section 204 of Executive Order No. 11246, as amended, so that such provisions will be binding upon each Subcontractor or vendor. Contractor will take such action with respect to any subcontract or purchase order as Forest Service may direct as a means of enforcing such provisions, including sanctions for noncompliance. Provided, however, that in the event Contractor becomes involved in, or is threatened with, litigation with a Subcontractor or vendor as a result of such direction by Forest Service, Contractor may request the United States to enter into such litigation to protect the interests of the United States.

B8.64 Debarment and Suspension Certification. Pursuant to 2 CFR Part 180 and 2 CFR 417, Contractor shall obtain certifications from its Subcontractors regarding debarment, suspension, ineligibility, and voluntary exclusion, including additional Subcontractors obtained after award of this contract. "Subcontractors" are participants in lower tier covered transactions.

Contractor may rely upon a certification of a prospective Subcontractor that it is not proposed for debarment under 2 CFR Part 180 and 2 CFR 417, debarred, suspended, ineligible, or voluntarily excluded from participating in covered transactions or contracts, unless Contractor knows that the certification is erroneous.

Contractor shall keep the certifications of its Subcontractors on file until contract Termination Date and any extensions thereof, and will provide a copy at the written request of Contracting Officer. Nothing contained in the foregoing shall be construed to require establishment of a system of records in order to render in good faith the certification required by this Subsection. The knowledge and information of Contractor is not required to exceed that which is normally possessed by a prudent person in the ordinary course of business dealings.

If Contractor knowingly enters into a contract transaction with a person who is proposed for debarment under 2 CFR Part 180 and 2 CFR 417, suspended, debarred, ineligible, or voluntarily excluded from participation in covered transactions or contracts, in addition to other remedies available to the Government, Forest Service may pursue available remedies, including suspension and/or debarment.

The Subcontractor for a contract shall complete a "Subcontractor Certification Regarding Debarment, Suspension, Ineligibility, and Voluntary Exclusion." An example of this certification is shown following the instructions for page 2 of this contract.

B8.65 Contract Consistency With Other Laws. The contract shall govern if State and local environmental quality laws conflict with or preclude performance of contractual requirements.

B9.0—PERFORMANCE AND SETTLEMENT

B9.1 Performance Bond. As a further guarantee of the faithful performance of the provisions of this contract, Contractor delivers herewith and agrees to maintain a surety bond in the dollar amount stated in A17, unless the amount is adjusted as provided in B9.11 or B9.13. In lieu of surety bond, Contractor may deposit into a Federal Depository, as directed by Forest Service under B4.21, and maintain therein, cash in the dollar amount stated in A17 or negotiable securities of the United States having market value at time of deposit of not less than the dollar amount stated in A17.

Any adjustment or extension of time for completion of this contract beyond 1 year may be granted only with the consent of surety on bond or delivery of a new bond. Should the sureties on the bond delivered herewith, or any bond delivered hereafter in connection with this contract, become unsatisfactory to Forest Service, Contractor shall, within 30 days of receipt of demand, furnish a new bond with surety satisfactory to Forest Service.

B9.11 Bond Reduction. Upon Contractor's written request, Contracting Officer shall redetermine the amount of Contractor's performance bond to an amount not less than Contractor's remaining obligations, including the value of Included Timber remaining on Contract Area, plus the estimated cost of uncompleted work required of Contractor and any unpaid billings due on the contract. Contracting Officer shall provide written notice of the redetermined amount to Contractor and to Contractor's surety. Similarly, Contracting Officer shall report to Contractor in writing the amount of deposited cash or deposited securities required thereafter, if such deposits exist in lieu of a surety bond.

As soon as security for the performance of this contract or the settlement of Claims incident thereto is no longer necessary, appropriate notice shall be given to surety or deposits that may have been made in lieu of

surety bond shall be returned to Contractor, subject to the conditions in B9.5.

B9.12 Letters of Credit. Notwithstanding the provisions of B9.1, approved letters of credit may be used in lieu of a surety bond for performance bond purposes. Such letters of credit shall be subject to approval by Contracting Officer.

B9.13 Temporary Bond Reduction. When, under B8.33, Contracting Officer requests Contractor to delay or interrupt Contractor's Operations for more than 90 days, the performance bond amount required may be temporarily reduced upon the written request of Contractor or at the discretion of Contracting Officer. For the period of the delay or interruption, the performance bond may be reduced to an amount not less than the estimated cost of uncompleted work required of Contractor and any unpaid billings due on the contract.

Upon Contractor's receipt of written notice from Contracting Officer that the basis for the delay or interruption no longer exists, Contractor shall restore the performance bond to the full amount shown in A17 within 15 days. Contractor shall not resume contract operations until the performance bond amount is fully restored.

B9.2 Disputes. This contract is subject to the Contract Disputes Act of 1978 (41 USC 601, *et seq.*). Except as provided in the Contract Disputes Act of 1978, all disputes arising under or relating to this contract shall be resolved in accordance with this Section.

As used herein, "Claim" means a written demand or assertion by one of the parties seeking, as a legal right, the payment of money, adjustment or interpretation of contract terms, or other relief, arising under or relating to this contract. A voucher, invoice, or request for payment that is not in dispute when submitted is not a Claim. However, where such submission is subsequently not acted upon in a reasonable time, or disputed either as to liability or amount, it may be converted to a Claim. A Claim by Contractor shall be made in writing and submitted to Contracting Officer for decision. A Claim by the Government against Contractor shall be subject to a decision by Contracting Officer.

For Contractor Claims of more than $100,000, Contractor shall submit with the Claim a certification that the Claim is made in good faith; the supporting data are accurate and complete to the best of Contractor's knowledge and belief; and the amount requested accurately reflects the contract adjustment for which Contractor believes the Government is liable. Contractor, if an individual, shall execute the certification. When Contractor is not an individual, the certification shall be executed by a senior company official in charge at Contractor's plant or location involved or by an officer or general partner of Contractor having overall responsibility for the conduct of Contractor's affairs.

For Contractor Claims of $100,000 or less, Contracting Officer must render a decision within 60 days. For Contractor Claims in excess of $100,000, Contracting Officer must decide the Claim within 60 days or notify Contractor of the date when the decision will be made.

Contracting Officer's decision shall be final unless Contractor appeals or files a suit.

The authority of Contracting Officer does not extend to Claims or disputes that by statute or regulation other agencies are expressly authorized to decide.

Interest, at the Prompt Payment Rate established by the Secretary of the Treasury, on the amount found due on Contractor's Claim shall be paid from the date the Claim is received by Contracting Officer until the date of the payment.

Except as the parties may otherwise agree, pending final resolution of a Claim of Contractor arising under the contract, Contractor shall proceed diligently with the performance of the contract in accordance with Contracting Officer's decision.

B9.21 Time Limits for Submission of Claim. Failure by Contractor to submit a Claim within established time limits shall relinquish the United States from any and all obligations whatsoever arising under the contract or portions thereof. Contractor shall file such Claim within the following time limits:

(a) When Contractor constructs Specified Road, Contractor must file any Claim not later than 60 days after receipt of Forest Service written notification of acceptance;

(b) When Forest Service constructs Specified Road, Contractor must file any Claim not later than 60 days after receipt of Forest Service written notification authorizing use of road;

(c) For subdivisions or cutting units and stewardship project areas, Contractor must file any Claim not later than 60 days after receipt of Forest Service written notification that such area has been accepted; and

(d) In all other cases, Contractor must file any Claim not later than 60 days after receipt of Contracting Officer written notification that contract is closed.

B9.22 Contract Documents. All contract documents are intended to be consistent with each other. In case of discrepancy, the following is the order of precedence:

(a) Special Provisions in Division C

(b) Contract Area Map

(c) Specific Conditions in Division A and Schedule of Items

(d) Standard Provisions in Division B

(e) Special project specifications

(f) Plans, such as slash, erosion control, and dust abatement

(g) Agreements between Contractor and Forest Service, as authorized under the contract

(h) Plans:

(i) Figured dimensions over scaled dimensions

(ii) Large scale Plans over small scale Plans

(i) Standard specifications

(j) Lists and/or tables in Plans over any conflicting notations on Plans

(k) Shop Drawings

B9.3 Breach. In event Contractor breaches any of the material provisions of this contract, Forest Service shall give Contractor notice of such breach and, allowing reasonable time for remedy of such breach and of Forest Service's election to suspend, may give notice to suspend all or any part of Contractor's Operations. Such notice of breach and notice to suspend Contractor's Operations shall be written, except oral notices may be given if such breach constitutes an immediate threat to human life or a threat of immediate and irreparable damage to National Forest resources. Notwithstanding Section B6.1, such oral suspension notice may be given to Contractor's work supervisor or, in work supervisor's absence, to those performing the operation. An oral suspension notice shall be promptly followed by telephone notice and a written explanation from Forest Service to Contractor.

Suspension under this Section shall not entitle Contractor to any remedies arising under B8.33.

Immediately upon oral or written suspension, Forest Service representative shall notify Contracting Officer of the suspension and related circumstances. Contracting Officer shall promptly review the suspension to determine if the suspension should be continued or lifted. Such suspension shall be lifted as early as conditions permit.

Upon receipt of oral or written notice of such breach, Contractor shall remedy the breach as follows:

(a) If remedying such breach requires on-the-ground action by Contractor, Contractor shall have 30 practicable operating days during Normal Operating Season to remedy the breach, except under emergency conditions when action should not be delayed to prevent major damage or

(b) If such breach does not require on-the-ground action by Contractor, such breach shall be remedied within 30 days.

B9.31 Termination for Breach. Contracting Officer, with the concurrence of the Regional Forester, may terminate this contract for breach in the event Contractor:

(a) Is convicted for violation of criminal statutes, civil standards, or any other offense indicating a lack of business integrity or honesty that seriously and directly affects the responsibility of Contractor; including, but not limited to:

(i) Theft, forgery, bribery, embezzlement, falsification or destruction of records, making false statements, or receiving stolen property, any of which occurred in connection with obtaining, attempting to obtain, selling, trading, or processing public timber;

(ii) Fraud, criminal offenses, or violation of Federal or State antitrust laws, any of which occurred in connection with obtaining, attempting to obtain, or performing a public contract or subcontract; or

(iii) Threatening, resisting, intimidating, or interfering with Forest Officers engaged in, or on account of, the performance of their official duties involving the protection, improvement, or administration of National Forest lands;

(b) Is convicted for violation of criminal statutes or civil standards, orders, permits, or other regulations for environmental protection issued by a Federal agency, State agency, or political subdivision thereof in the conduct of operations hereunder on National Forest lands, pursuant to 36 CFR 223.116;

(c) Has engaged in a pattern of activity that demonstrates flagrant disregard for the terms of this contract, such as, but not limited to, repeated suspensions for breach pursuant to B9.3, causing undesignated timber meeting Utilization Standards to be unnecessarily damaged or negligently or willfully cut, or causing other serious environmental degradation or resource damage;

(d) Fails to comply with contract provisions related to nondiscrimination in employment; or

(e) Fails to remedy a breach of contract within time limits stated in B9.3.

Damages due the United States for termination under this Subsection shall be determined pursuant to B9.4.

B9.4 – Damages for Failure to Complete Contract or Termination for Breach. (a) In event of Contractor's failure to cut designated timber on portions of Contract Area by Termination Date; Contractor's failure to complete required stewardship projects by Termination Date; or termination for breach under B9.31; Forest Service shall appraise remaining Included Timber and stewardship projects, unless termination is under B8.22 or B8.34. Such appraisal shall be made with the standard Forest Service method in use at time of termination.

(b) If the contract is reoffered and awarded, damages due shall be the amount by which Current Contract Value decreases at new Bid Rates, plus costs described in paragraph (d) of this Section, less any unused established Stewardship Credits.

(c) If the contract is not reoffered or there are no responsive bids on the reoffered contract, damages due shall be the amount by which Current Contract Value decreases, based on the value determined by appraisal, plus costs described in paragraph (d) of this Section, less any unused established Stewardship Credits.

(d) If applicable, the following costs shall be included in damages:

(i) The cost of reoffering, including, but not limited to, salary costs, document preparation and

duplication costs, mailing costs, and contract advertisement costs.

(ii) If Contractor has failed to cut individual trees in the portions of Contract Area cut over and there is no resale of such individual trees, Contractor shall pay Forest Service for cost of felling and removal or otherwise eliminating such uncut trees, except for occasional trees not cut for reasons stated in B6.4.

(iii) The Government's loss caused by the delay in receipt of stumpage payments. Such loss will be measured by interest at the Current Value of Funds Rate established by the Secretary of the Treasury, on the unpaid contract value at Termination Date. Interest will be charged for the total number of months, or portions thereof, from Termination Date until midpoint of the contract resale period, less any time in excess of 1 year needed to make the resale.

(iv) Any increase in reforestation costs, including site preparation, seeding, and planting caused by Contractor's failure to harvest Included Timber by Termination Date.

B9.5 Settlement. If obligations of Contractor have not been fully discharged by Termination Date, any money advanced or deposited hereunder shall be retained and applied toward unfulfilled obligations of Contractor without prejudice to any other rights or remedies of Forest Service. Such funds may be treated as cooperative deposits under B4.218 for uncompleted work 30 days after receipt of written notice from Contracting Officer to Contractor of work to be done and Contractor's failure to deny the obligation or to do the work.

B9.6 Contract Closure. Contracting Officer shall give appropriate written notice to Contractor when Contractor has complied with the terms of this contract. Contractor shall be paid refunds due from Integrated Resource Account under B4.24 and excess cooperative deposits under B4.218.

DIVISION C

Special Provisions

In accordance with A22, the Sections, Subsections, and Items therein listed are attached and made a part hereof. The material is indexed by the numbering system used in Division B. The numbers after the C (that identifies material in this Division) indicates the Part, Section, Subsection, or Item of Division B that is being supplemented or modified by each particular provision.

TRAFFIC CONTROL PLAN AND SPECIFICATIONS – B(T)6.33 Safety

Unless otherwise agreed, the following measures are required to provide adequate warning of hazards for users of roads and trails adjacent to Purchaser/Contractors's Operations.

Part I. Signing and Other Warning Methods:

(a) Signs. The following signs are required when Purchaser/Contractors's Operations are in progress adjacent to or on Forest Service controlled roads and trails:

MINIMUM LETTER SIZE AND LEGEND	MINIMUM SIZE AND SHAPE	
1. LOGGING OPERATIONS (4" letters)	30" x 30"(diamond)	Min. 100 ft. outside of any work areas, on roads listed in C(T)5.31# and trails listed in Part II.
2. NEXT <> MILES (4" letters)	24” x 18” (rectangle)	To be used as a supplemental plaque mounted below "Logging Operations" where work area is continuous.
3. FOR LOGGING USE ONLY (4" letters)	30" x 30"(diamond)	Required where roads listed in C(T)5.31# and Temporary Roads intersect with C(T)5.31# roads. Install a cross ditch to discourage use when sign is covered or removed for extended periods.
4. LOG TRUCKS or HEAVY TRUCK TRAFFIC (4" letters)	30" x 30"(diamond)	At critical intersections on roads listed in C(T)5.31# when traffic is heavy or otherwise exceeds volumes stated in Part II below. Remove or cover when the sign is not applicable.
5. END LOGGING OPERATIONS (4" letters)	30" x 30"(diamond)	Use in conjunction with "Logging Operations/Next <> Miles" and "Logging Operations."
6. TREE FELLING AHEAD (4" letters)	30" x 30"(diamond)	Required 200 feet in advance of danger area where timber is being felled adjacent to all roads, including Temporary Roads, and trails.
7. ROAD MACHINERY AHEAD (4" letters)	30" x 30"(diamond)	Required at least 200 feet in advance of road maintenance operations on roads listed in Schedule C(T)5.31#.

All signs shall meet requirements as specified in Parts 1 and 6 of the Manual of Uniform Traffic Control Devices (MUTCD).

Sign borders and lettering shall be black. Borders are 7/8 inch wide, inset 5/8 inch from outside edge of sign. All sign backgrounds shall be orange, except that signs that need to be seen both day and night shall be retroreflective orange or illuminated.

Signs shall be installed on posts or on temporary supports complying with MUTCD standards. Post-mounted signs shall have a 5 foot minimum height above road surface, except that the “NEXT <> MILES” supplemental plaque, when used in conjunction with the “LOGGING OPERATIONS” sign, shall be a minimum of 4 feet above road surface.

All signs are to be removed or covered when operations are interrupted for seasonal nonuse or other extended periods.

TRAFFIC CONTROL PLAN AND SPECIFICATIONS – B(T)6.33 Safety (continued)

Purchaser/Contractor shall furnish flag personnel meeting the requirements of Chapter 6E of the MUTCD and advance warning signs when cable or helicopter logging above roads or trails, felling adjacent to roads or trails, where logs being bucked may roll into roads or trails, and in areas where fallout from blasting may occur. Except as identifed in Part II, Purchaser/Contractor may temporarily block roads listed in C(T)5.31# and Temporary Roads in lieu of furnishing flag personnel. On roads controlled by other jurisdictional authorities, Purchaser/Contractor shall receive approval from that authority for Purchaser/Contractors's safety measures and traffic control plans before commencement of operations.

(b) Barricades. On roads listed in C(T)5.31#, if Purchaser/Contractors's Operations cause the traveled way or road shoulders to be constricted overnight, or longer, by such obstructions as decked logs, parked equipment, or piled slash, Purchaser/Contractor shall place barricades on both sides of the encroaching obstruction to safely channel traffic around such obstructions. Barricades shall remain in place until the obstruction is removed.

Barricades shall be Type II and meet specifications in MUTCD, Part 6. Barricades must be at least 3 feet high. Rails must be at least 2 feet long. Striping shall be alternating orange and white, sloping at a 45 degree angle, and reflectorized. For rails 2 feet to 3 feet long, striping shall be 4 inches wide. For rails longer than 3 feet, striping shall be 6 inches wide. Two rails, 8-12 inches in width, must face each direction.

Barricades shall be equipped with warning lights which shall be Type A low intensity flashing and shall be maintained so as to be capable of being visible on a clear night from a distance of 3,000 feet.

(c) Other Traffic Control Methods. The posting of CB channel signs may be authorized.

On roads listed in C(T)5.31#, Purchaser/Contractor may be authorized to install temporary gates, barricades (except cables), or natural barriers. The devices must be installed with the necessary hazard markers, be reasonably passable by Forest Service, and be removed prior to acceptance of the subdivision being served by the road.

Part II. Specific Requirements:

Purchaser/Contractor and Forest Service agree to the above stated requirements of the Traffic Control Plan:

Name	Name
Title	Title
Date	Date

C2.11# - TIMBER SUBJECT TO AGREEMENT *(09/2004)*

In addition, there is within Contract Area an unestimated quantity of:

Species	**Product**
All Coniferous Species	**Grn Bio Cv**

that shall be Included Timber upon written agreement.

C2.355# - DESIGNATION BY PRESCRIPTION *(05/2015)*

Within Subdivision(s) or Cutting Unit(s) **All** , as shown on Contract Area Map, the following criteria shall be used by Contractor to designate trees and other products for cutting and removal:

(a) 1/ **specified by the Prescription Table and Criteria** (b) Additional trees to be cut, if any, are marked by Forest Service with 2/ **GREEN** tracer paint.

(c) Cutting unit boundaries and other trees that shall be left uncut are marked by Forest Service with 2/ **PINK** tracer paint.

Contractor may select cut trees in cutting unit(s) 3/ **N/A** without pre-harvest marking in accordance with the criteria in (a). If specified in (a), Contractor shall mark leave trees in cutting unit(s) 4/ **as described in Project 001 - Leave Tree Marking** with Contractor's non-tracer 2/ **as agreed by the Forest Service** paint for inspection and approval by Forest Service prior to cutting.

Prescriptive Criteria/Associated Cutting Units

C2.355# - DESIGNATION BY PRESCRIPTION *(05/2015)*

A. Leave Tree Marking (LTM), Designation by Prescription (DxP), as referred to in Project 001 in Attachment G, is specified below:

1. Residual Basal Area per Acre (RBA)

a) Retain the desired square feet of RBA, as specified in Table 1. Average plot readings within each subdivision shall fall within +/- 10 square feet of the desired RBA, as stated in Table 1. No individual plots will be accepted which falls outside +/- 20 square feet of the desired RBA, as stated in Table 1 with the following exceptions.

i. When the RBA is higher than the desired RBA due to the presence of large diameter trees exceeding the diameter limit at breast height as specified in Table 1 or when the RBA is higher than the desired RBA due to the presence of a Skip as defined below.

ii. When the RBA is lower than the desired RBA due to the lack of trees meeting the minimum diameter requirement at breast height as specified in A.2 or when the RBA is lower than the desired RBA due to the presence of a Gap as defined below.

b) The following prioritized guidelines will be used for leave tree selection outside of Skips and Gaps to attain the desired RBA as specified in Table 1.

i. All trees exceeding the species specific upper DBH limits specified in Table 1 shall be retained and counted to achieve the desired RBA.

ii. All trees with a blue boundary tag and pink paint above and below stump level shall be retained. Those that meet the minimum specifications stated in A.2 shall be counted to achieve the desired RBA.

iii. All tree species not specified in the species preference list below, including hardwoods, shall be retained but may not be used to achieve the desired RBA as specified in Table 1.

iv. Additional leave trees shall be chosen from the most vigorous and healthy trees with crown ratios of 30 percent or greater and in the dominant or codominant crown classes. Leave trees should be free of major defect, insects (no pitch tubes), Dwarf Mistletoe, and rot. When tree health and crown class are equal, use the following species preference list to achieve the desired RBA.

1. Species preference list:

1) western white pine (WWP)
2) ponderosa pine (PP)
3) western larch (WL)
4) Douglas-fir (DF)
5) western hemlock (WH)
6) mountain hemlock (MH)
7) Engelmann spruce (ES)
8) true fir (TF= grand, noble, Pacific silver)
9) lodgepole pine (LP)

c) Skips - All trees within 83 feet slope distance of a tree identified with a Red Special Treatment Area tag and two bands of orange paint shall be retained. The presence of a Skip is not to influence leave tree marking adjacent to the Skip.

d) Gaps – All trees species designated in Table 1 that meet the minimum specifications in A2, except those which exceed the species specific upper DBH limits specified in Table 1 and dead standing, shall be cut within 83 feet slope distance of a tree identified with a Red Special Treatment Area tag and two bands of yellow paint. Yellow painted trees associated with a Gap shall be retained. The presence of a Gap is not to influence leave tree marking adjacent to the Gap.

e) DxP Definitions:

i. Crown Ratio – the ratio of crown length to total tree height.

ii. Crown Class – a category of tree based on its crown position relative to those of adjacent trees.

iii. Dominant Tree – a tree whose crown extends above the general level of the main canopy

iv. Codominant Tree – a tree whose crown helps to form the general level of the main canopy

v. Suppressed Tree – a tree whose crown is completely overtopped by the crowns of one or more neighboring trees.

vi. Vigor – healthy, well-balanced growth.

C2.355# - DESIGNATION BY PRESCRIPTION *(05/2015)*

TABLE 1.

Designated Species:
lodgepole pine, grand fir, noble fir, Pacific silver fir, Engelmann spruce, mountain hemlock, western hemlock, Douglas-fir, western larch, ponderosa pine, western white pine

Subdivision	Desired Residual Basal Area (Ft.^{2}/Ac.)	Acceptable Range of Residual Basal Area (Ft.^{2}/Ac.)	Maximum Diameter at Breast Height (DBH) for Cut Tree Species			Skips	Gaps
			Ponderosa Pine	Western Larch	All Other Cut Tree Species		
81	100	90-110	20.9	20.9	20.9	-	Yes
83	100	90-110	20.9	20.9	20.9	-	-
102	100	90-110	20.9	20.9	23.9	-	-
107	90	80-100	20.9	20.9	23.9	-	-
109	100	90-110	20.9	20.9	23.9	-	-
110	120	110-130	20.9	23.9	23.9	-	Yes
113	110	100-120	20.9	23.9	23.9	-	-
152	130	120-140	20.9	20.9	20.9	-	-
170	80	70-90	20.9	23.9	23.9	Yes	Yes
171	80	70-90	20.9	23.9	23.9	-	-
172	100	90-110	20.9	23.9	23.9	-	-
173	80	70-90	20.9	23.9	23.9	-	-
195	100	90-110	20.9	20.9	22.9	-	-
196	100	90-110	20.9	20.9	22.9	-	-
198	140	130-150	20.9	20.9	23.9	-	-

C2.355# - DESIGNATION BY PRESCRIPTION *(05/2015)*

The 6-class dwarf mistletoe rating system (DMR)
(Hawksworth 1977)

Instructions

STEP 1. Divide live crown into thirds.

STEP 2. Rate each third separately. Each third should be given a rating of 0, 1 or 2 as described below.
(0) No visible infections.
(1) Light infection (1/2 or less of total number of branches in the third infected).
(2) Heavy infection (more than ½ of total number of branches in the third infected).

STEP 3. Finally, add ratings of thirds to obtain rating for total tree.

Example

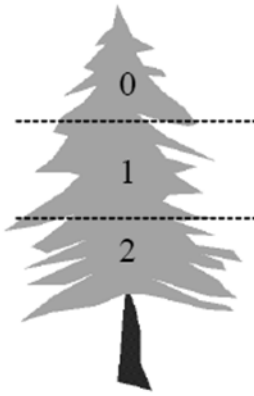

If this third has no visible infections, it's rating is (0)

If this third is lightly infected, it's rating is (1)

If this third is heavily infected, it's rating is (2)

The tree in this example will receive A rating of 0+1+2=3.

C3.47# - ABNORMAL DELAY *(05/2005)*

Unless otherwise agreed, felled timber meeting Utilization Standards shall be removed by Contractor pursuant to B2.2 and shall be presented for Scaling within the time period indicated in the following removal schedule. The number of days shown are consecutive calendar days.

Failure to remove and present such timber for Scaling within the required time limits will be considered abnormal delay, subject to B3.47.

See attached removal schedule.

REMOVAL SCHEDULE PURSUANT TO C3.47# - ABNORMAL DELAY *(05/2005)*

Included Timber	Time Limits	
All.	180	days after felling is started.
All timber decked during construction clearing.	N/A	days after felling on each Specified Road constructed by Contractor is initiated.
Timber decked during road construction.	N/A	days after Forest Service authorizes Contractor to use roads pursuant to B5.2.

C4.22 - CHANGES IN STEWARDSHIP CREDITS *(06/2008)*

The Contracting Officer may at any time, by written order, make changes within the general scope of this contract in any one or more of the following:

(1) Specifications for Stewardship Projects listed in C6.9#.

(2) Quantities of Stewardship Projects listed in A4c.

(3) Prices for Stewardship Projects listed in A4c.

(4) Place of performance of the Stewardship Projects as shown on the Contract Area Map.

In addition, by written agreement, new Stewardship Projects may be added to C6.9# and A4c if they are within the general scope of this contract. Contract Area may be expanded to add new stewardship projects.

If a written change order causes an increase in the time required for performing any part of the work under this contract, the Contracting Officer shall make an adjustment in the Contract Termination Date and shall modify the contract accordingly.

The Contractor must assert their right to equitable adjustments under this provision within 30 days from receipt of the written order. However, if the Contracting Officer decides that the facts justify it, the Contracting Officer may receive and act upon a proposal submitted before contract closure.

If the Contractor's proposal includes the cost of property made obsolete or excess by the change, the Contracting Officer shall have the right to prescribe the manner of the disposition of the property.

Failure to agree to an adjustment under this provision shall be considered a dispute under B9.2. However, nothing in this provision shall excuse the Contractor from proceeding with the contract as changed.

In addition, by written modification of the contract, new Stewardship Projects may be added to C6.9# and A4c, with or without expanding the Contract Area, if they are within the general scope of this contract.

C4.4 - PAYMENTS NOT RECEIVED *(08/2012)*

(a) Payments are due and payable on the date of issue indicated on the bill for collection. When a payment for timber cut and other charges is not received at the location designated by Forest Service by the date specified in the bill for collection for receipt of payment, Contracting Officer will suspend all or any part of Contractor's Operations until payment or acceptable payment guarantee is received. Other charges include, but are not limited to:

(i) Slash disposal, road maintenance, and contract scaling deposits;

(ii) Cooperative work at rates established by specific agreement under B4.218;

(iii) Damages pursuant to B9.4;

(iv) Road use fees;

(v) Restoration of downpayment pursuant to B4.22;

(vi) Periodic payments pursuant to B4.213;

(vii) Extension Deposits pursuant to B4.217; and

(viii) Other mandatory deposits.

(b) Failure to pay amounts due by the date specified in the bill for collection for receipt of payment shall be considered a breach under B9.3. The 30-day notice period prescribed therein shall begin to run as of the end of business on the date specified for receipt of payments. If the performance or payment is guaranteed by surety bond, the surety will receive a copy of the written notification of breach. Demand will be made on the surety or other institution providing the guarantee or bond instrument for immediate payment 10 days after issuance of written notification of the breach.

(c) Pursuant to the Debt Collection Improvement Act of 1996, as amended, if payment is not received by Forest Service within 15 days after the date of issue indicated on the bill for collection:

(i) Simple interest shall be assessed at the Current Value of Funds Rate as established by the Secretary of the Treasury. Interest will begin to accrue as of the date of issue indicated on the initial bill for collection.

(ii) Debtors will be assessed administrative charges, in addition to the delinquent amount due. Administrative charges are those additional costs incurred by the Government in processing, handling, and collecting delinquent debts.

(iii) A penalty charge of six (6) percent per annum will be assessed on any portion of a debt delinquent more than 90 days. This penalty charge is in addition to interest and administrative charges under paragraphs (c)(i) and (c)(ii). The penalty charge shall accrue from the date of issue indicated on the bill for collection and shall be assessed on all outstanding amounts, including interest and administrative costs assessed under paragraphs (c)(i) and (c)(ii).

(iv) Payments will be credited on the date received by the Federal Depository or Collection Officer designated on the bill for collection.

(d) Forest Service remedies for Contractor's failure to make payment for timber cut and other charges when due, except for accrual of interest, suspension of all or any part of Contractor's Operations, and administrative offset, shall be stayed for so long as:

(i) A bona fide dispute exists as to Contractor's obligation to make such payment and

(ii) Contractor files and prosecutes a timely Claim.

C5.1# - TEMPORARY ROAD AND LANDING CONSTRUCTION (OPTION 1) *(06/2010)*

In addition to the requirements of B5.1 and B6.63, Contractor and Forest Service will agree to the design, construction, maintenance, closure, and obliteration of all Temporary Roads.

Construction of Temporary Roads in areas shown on Contract Area Map shall be in accordance with the attached plans or criteria.

Unless otherwise agreed, if Contractor's Operations require more than **N/A** cubic yards of rock for Temporary Roads, landings, or other temporary uses, such rock shall be obtained from commercial sources.

See attached Plans and/or Criteria.

PLANS AND/OR CRITERIA PURSUANT TO C5.1# - TEMPORARY ROAD AND LANDING CONSTRUCTION (OPTION 1) (06/2010)

Construction: When appropriate, reestablish existing road alignments unless a new location will cause less resource damage. Temporary roads and landings that obstruct ditch lines or drainage ways shall be improved with french drains, drivable dips or materials that provide effective drainage and prevent erosion, prior to haul. Proper drainage will be maintained on all temporary roads throughout the operating season. Any instream culverts installed on temporary roads will be installed and removed between July 15 and August 15 unless otherwise approved. New temporary roads and landings should be located outside of Riparian Reserves. Use of existing facilities within riparian reserves may be allowed if erosion potential and sedimentation concerns are sufficiently mitigated. Certified weed-free rock shall be used when necessary to reduce erosion, puddling and compaction on landings and Temporary Roads. If possible, vegetation will be left in place and driven over. All stumps, rocks, slash, and debris will be left along edge of road and/or landing in such a manner as to be fully retrievable during rehabilitation (generally on the uphill side of road). Roadbed will not exceed 12 feet and clearing limits 16 feet in width unless approved by the Forest Service.

Rehabilitation: Temporary roads and landings not shown on the Contract Area Map as Remain Open will be scarified. If rock was used the rock would be removed or incorporated into the soil by decompacting to a depth of 12 inches or scarifying the roadbed. Remove culverts and cross-drain ditches and install water bars where designated by the Forest Service. Available logging slash, logs, or root wads will be placed across the road or landing surface. Effectively block motorized access though the use of an earthen berm, placement of large boulders, or other techniques as approved by the Forest Service. Following rehabilitation all areas of exposed soil will be seeded and mulched as required by provision C6.6#.

C5.12# - USE OF ROADS BY CONTRACTOR *(09/2004)*

Contractor's use of existing roads identified on Contract Area Map by the following codes is prohibited or subject to restrictive limitations, unless agreed otherwise:

Code	Use Limitations
X	Hauling prohibited
R	Hauling restricted
U	Unsuitable for hauling prior to completion of agreed reconstruction
P	Use prohibited
A	Public use restriction
W	Regulation waiver

Roads coded A will be signed by Forest Service to inform the public of use restrictions. Contractor's use of roads coded R, A, or W shall be in accordance with the following restrictions:

See Restricted Road List Table.

TABLE PURSUANT TO C5.12# - USE OF ROADS BY CONTRACTOR *(09/2004)*

Restricted Road List

Number	Road Name	Termini		Map Legend	Description of Restrictions
		From	To		
4400 000 (paved)	DUFUR MILL	0.00	3.67	R	1/ 3/ 4/
4400 620	--	0.00	1.10	R	1/ 3/ 4/
4400 015	--	0.00	0.78	R	1/ 3/ 4/
4400 622	--	0.00	1.10	R	1/ 3/ 4/
COOPER SPUR	3510 00	0.00	2.20	R	5/
3510 620	--	0.00	0.80	R	1/ 2/ 3/ 5/

1/ Protection of Roads - Heavy Haul Restricted. Road has limited structural capacity and may not support commercial traffic during adverse weather conditions. Haul shall cease when indicators of road distress are observed and may resume after mitigation.

2/ Protection of Roads – Winter Haul Restricted. Commercial haul shall cease when the temperature of the road surface, as measured at the lowest elevation along the haul route on National Forest System lands, is above 28 degrees Fahrenheit and when the temperature as measured at the highest elevation on the active haul route is between 28 and 38 degrees Fahrenheit or at any time when it is determined that freeze-thaw conditions along the haul route exist.

3/ Protection of Roads – Wet Weather Haul Restricted. Commercial haul shall cease whenever 1.5-inch of precipitation occurs within any given 24-hour period as measured at the lowest elevation along the haul route. To measure precipitation, the Contractor may install a temporary rain gauge on National Forest System Roads near the lowest elevation along the haul route as agreed upon by the Contracting Officer; otherwise precipitation would be measured according to the Log Creek RAWS (LGFO3) station: http://raws.wrh.noaa.gov/cgi-bin/roman/raws_flat.cgi?stn=LGFO3 unless otherwise agreed by the Forest Service.

4/ Use of road is prohibeted from December 16 to March 14.

5/Contractor will be required to obtain a Hood River County, Department of Public Works, Right-of-Way Work Permit Application for each road approach along the 3510 road including the 3510620, and temporary road or landing access locations prior to use for hauling equipment and logs.

Reference C6.315# Project Operation Schedule for additional restrictions on road use.

The load, weight, height, length, or width limitations of vehicles on National Forest roads shall be in accordance with State laws unless otherwise approved in writing by special-use authorization.

Title and Date of Governing Road Rules Document:

Mt. Hood National Forest Transportation System Management Road Rules	January 1992 and Amendments through Timber Contract Award Date
Commercial Road Rules	Effective Date

C5.13# - ROAD COMPLETION DATE *(09/2004)*

Construction of Specified Roads shall be completed no later than **10/31/2021** ; except for earlier construction completion dates for roads listed below:

Road Number	Road Name	Station From	Station To	Completion Date
N/A				

Completion date is binding on the party that constructs road, whether Contractor or Forest Service. Contracting Officer may modify the completion date in writing to conform to the Technical Proposal under B6.311 at the request of Contractor.

When Contractor elects Forest Service construction of Specified Roads shown in contract advertisement, Forest Service may adjust construction completion date when road construction is delayed or interrupted for causes that qualify for an adjustment of the completion date of Forest Service's road construction contract. When qualifying delays or interruptions of road construction occur, Forest Service shall evaluate such occurrences and document any findings. The current status of any adjustment shall be available to Contractor on request. Promptly after the end of Normal Operating Season in which qualifying days occur, Forest Service shall give Contractor written notice of (a) number of qualifying days claimed, and (b) new construction completion dates. After all road construction is complete, Forest Service shall grant Contract Term Adjustment. Such adjustment shall be limited to road completion date delays that occurred during Normal Operating Season.

If Forest Service is responsible for road construction and the actual date of road completion is 1 year or more after the completion date stated above, Contractor may request a rate redetermination under B3.3 for remaining volume. Such request must be made within 30 days of notification that road construction has been completed. Upon receipt of such request, Forest Service shall redetermine rates using standard methods in effect on the completion date of road construction. Rates to be established shall apply to all timber removed from Contract Area after the effective date of the rate redetermination.

Forest Service shall in no way be responsible for any delay or damage caused by road contractor in performing the road construction, except such delay as may be the fault or negligence of Forest Service.

When Contractor constructs Specified Roads and requests Contract Term Adjustment, completion dates shall be adjusted by number of days that qualify for such adjustment, provided such qualifying days occur before specified construction completion date. When Contractor desires to construct an alternate facility under B5.26, Forest Service and Contractor shall agree, in writing, on a construction completion date for alternate facility. Contract Term Adjustment as noted above will apply. Completion date shall be adjusted where a Design Change or physical changes necessitate a modification of Specified Road construction work that increases the scope or magnitude of the required work.

If Contractor fails to complete construction of any or all Specified Roads by applicable completion date, as adjusted, Contract Term Extension shall not be granted.

As used in this provision, construction of a road is completed when:

(a) Contractor constructs Specified Roads and Forest Service furnishes Contractor with written notice of acceptance under B6.36 or

(b) Forest Service constructs road and furnishes Contractor with written notice authorizing use of road.

Notwithstanding B5.1, Contractor shall not use a road that Contractor has elected for Forest Service to construct, until construction is completed and Forest Service furnishes Contractor with written notice authorizing use of road.

C5.213# - DEPOSIT FOR RECONSTRUCTION ENGINEERING SERVICES *(01/2020)*

Contractor shall make a cash deposit for engineering services (preconstruction and construction) provided by Forest Service for reconstruction of National Forest system roads necessary to accommodate Contractor's use under this contract, pursuant to 16 USC 537.

The total amount to be deposited by Contractor for reconstruction related engineering services to be completed by Forest Service personnel or by public works contract is $ **$11,281.00** . Contractor shall make this deposit at the end of the first full Normal Operating Season or 12 months from contract award, whichever occurs first. If payment falls due on a date other than a normal billing date, the payment date shall be extended to coincide with the next Timber Sale Account billing date. In the event a different deposit schedule is agreed to, such deposit shall be due within 15 days after the date of issue indicated on the initial bill for collection, pursuant to B4.4.

The amount of the required deposit will be shown as an associated charge on Contractor's Integrated Resource Account. Forest Service shall retain any unexpended deposit for reconstruction related engineering services.

The deposit for reconstruction related engineering services shall be commensurate with project need and Contractor's road use. Forest Service shall complete reconstruction related engineering services on the following schedule unless a different completion schedule is agreed in writing:

Road or Facility No.	**Termini From**	**To**	**Engineering Services Completion Date**
N/A			

Reconstruction related engineering services may consist of some or all of the engineering work and expense of: preparing, setting out, controlling, inspecting, and measuring the reconstruction of a National Forest system road.

C5.221# - MATERIAL SOURCES *(09/2004)*

Sources of local materials are designated on Plans and Contract Area Map. Forest Service assumes responsibility for the quality and quantity of material in designated sources. Contractor shall determine the equipment and work required to produce the specified product, including the selection of acceptable material that is reasonably available in the source that meets specifications. The designation of source includes the rights of Contractor to use certain area(s) for plant site, stockpiles, and haul roads.

Should the designated source, due to causes beyond the control of Contractor, contain insufficient acceptable material, Forest Service will provide another source with adjustment in accordance with B5.253.

When Contractor elects not to use designated sources, Contractor shall furnish the specified product with no adjustment in unit rates. Quality testing shall be the responsibility of Contractor. Test results shall be furnished to Forest Service.

When Contractor elects not to use designated sources and the Schedule of Items lists pit development separately, cost allowance will be reduced under B5.253 when Forest Service determines the work will not be required.

When materials are subject to a weight measurement, the specific gravity or weight/volume relationship used as a basis for determination of estimated quantities shall be:

Source I **N/A** , Source II **N/A** , and Source III **N/A** .

Contractor may, when agreed in writing, use on the project such suitable stone, gravel, and sand, or other material found in the excavation, and will earn a cost allowance for the excavation of such materials at the corresponding contract unit price and for the pay items for which the excavated material is used. Contractor shall replace, without additional cost allowance, sufficient suitable materials to complete the portion of the work that was originally contemplated to be constructed with such material. Contractor shall not excavate or remove any material, except that which is within the excavation limits, without written authorization from Forest Service.

When material is appraised from non-National Forest designated sources, owner charges for the material in terms of unit cost for royalties, purchase of raw materials, or finished products shall be as follows until **N/A** :

See Material Source Table.

Should quantity vary from that estimated, payment to owners shall be for units actually obtained. Contractor shall make arrangements with owner(s) for measurement and payment for royalties, purchase of raw materials, or finished products, as shown above.

Materials produced or processed from National Forest lands in excess of the quantities required for performance of this contract are the property of Forest Service, unless prior written agreement has been obtained to use excess material on other National Forest contracts. Forest Service is not obligated to reimburse Contractor for the cost of their production.

Materials shall be stored to assure the preservation of their quality and fitness for the work. Stored materials shall be located to facilitate their prompt inspection. Sites on Forest Service administered land, approved by Forest Service, may be used for storage purposes and for the placing of Contractor's plant equipment. All storage sites provided by Forest Service shall be restored at Contractor's expense.

Contractor shall be responsible for making arrangements for storage on other than Forest Service administered lands.

When the construction of the portion of the project for which Temporary Roads used for hauling materials is completed, all such Temporary Roads shall be restored as nearly as practicable to their original ground profile, unless otherwise agreed in writing.

MATERIAL SOURCE TABLE PURSUANT TO C5.221# - MATERIAL SOURCES (09/2004)

Material	Type of Purchase	Owner(s)	Unit of Measure	Unit Price	Estimated Quantity	Total
		N/A				

C5.31# - ROAD MAINTENANCE REQUIREMENTS *(09/2004)*

Contractor shall maintain roads in accordance with the following Contract Road Maintenance Requirements Summary:

See Contract Road Maintenance Requirements Summary Table.

TABLE PURSUANT TO C5.31# - ROAD MAINTENANCE REQUIREMENTS (09/2004)

Contract Road Maintenance Requirements Summary

Road	Termini		Miles	Applicable Prehaul Road Maintenance Specifications						
	From	To		T811	T831	T832	T834	T836	T842	T891
4400 000	OR-35	4400620	3.67	--	P	--	P	P	P	--
4400 620	Jct. 4400	Jct. 4400 622	0.40	P	P	P	P	--	P	P
4400 620	Jct. 4400 622	Jct. 4400 015	0.70	P	P	P	P	--	P	P
4400 015	Jct. 4400 620	MP 0.78	0.78	P	P	P	P	--	P	P
4400 622	Jct. 4400 620	MP 0.22	0.22	P	P	P	P	--	P	P
4400 622	MP 0.22	End	0.35	P	P	P	P	--	P	P
3510 620	Jct. 3510	MP 0.80	0.80	P	P	P	P	--	P	P

P= Contractor Performance Item, D = Deposit to Forest Service, D3 = Deposit to Third Party

Road	Termini		Miles	Applicable During haul Road Maintenance Specifications									
	From	To		T811	T812	T813	T831	T832	T834	T836	T842	T854	T891
4400 000	OR-35	4400 620	3.67	--	--	D	P	--	P	P	P	P	--
4400 620	Jct. 4400	Jct. 4400 622	0.40	P	P	P	P	P	P	--	P	P	P
4400 620	Jct. 4400 622	Jct. 4400 015	0.70	P	--	P	P	P	P	--	P	P	P
4400 015	Jct. 4400 620	MP 0.78	0.78	P	--	P	P	P	P	--	P	P	P
4400 622	Jct. 4400 620	MP 0.22	0.22	P	--	P	P	P	P	--	P	P	P
4400 622	MP 0.22	End	0.35	P	--	P	P	P	P	--	P	P	P
3510 620	Jct. 3510	MP 0.80	0.80	P	P	P	P	P	P	--	P	P	P

P= Contractor Performance Item, D = Deposit to Forest Service, D3 = Deposit to Third Party

Road	Termini		Miles	Applicable Post Haul Road Maintenance Specifications						
	From	to		T811	T831	T832	T834	T835	T836	T891
4400 000	OR-35	4400 620	3.67	--	P	P	P	--	P	--
4400 620	Jct. 4400	Jct. 4400 622	0.40	P	P	P	P	--	--	P
4400 620	Jct. 4400 622	Jct. 4400 015	0.70	P	P	P	P	--	--	P
4400 015	Jct. 4400 620	MP 0.78	0.78	P	P	P	P	--	--	P
4400 622	Jct. 4400 620	MP 0.22	0.22	P	P	P	P	--	--	P
4400 622	MP 0.22	End	0.35	P	P	P	P	--	--	P
3510 620	Jct. 3510	MP 0.80	0.80	p	P	P	P	P	--	p

P= Contractor Performance Item, D = Deposit to Forest Service, D3 = Deposit to Third Party

Description of work required by the above T-specs is shown in the following ROAD MAINTENANCE REQUIREMENTS SPECIFICATION and included in the stewardship contract

ROAD MAINTENANCE REQUIREMENTS SPECIFICATION CODES TABLE PURSUANT TO C5.31# - ROAD MAINTENANCE REQUIREMENTS (09/2004)

1		2	3			4	5	6			7	8	9	
Road No. and			Travel Way			Brushing and Log Out	Surface	Dust Abatement			Seasonal Mainte-nance	Snow Removal	Post Haul	
Termini		Specification	Width	X Slope	Comp			Product	Applic. Rate	Width			Block	Treat
4400 000		--	EX	AI	--	OPT (8′)	D	--	--	--	--	TS	--	--
OR-35	4400 620													
4400 620		--	EX	AI	B	OPT (8′)	20 CY* (Grading D)	--	--	--	--	TS	--	--
Jct. 4400 000	Jct. 4400 622													
4400 620		--	EX	AI	B	OPT (8′)	40 CY* (Grading D)	--	--	--	--	TS	--	--
Jct. 4400 622	Jct. 4400 015													
4400 015		--	EX	Al	B	OPT (4′)	40 CY* (Grading D)	--	--	--	--	TS	--	P
Jct. 4400 620	MP 0.78													
4400 622		--	EX	Al	B	OPT (4′)	30 CY* (Grading D)	--	--	--	--	TS	--	P
Jct. 4400 620	MP 0.22													
4400 622		--	EX	Al	B	OPT (4′)	30 CY* (Grading D)	--	--	--	--	TS	--	P
MP 0.22	End of Road													
3510 620		--	EX	Al	B	OPT (4′)	40 CY* (Grading D)	--	--	--	--	TS	--	P
Jct. 3510 000	MP 0.80													

*Surfacing – Aggregate to be obtained from Forest Service approved commercial source that is reasonably free of seeds and organic materials from noxious weeds and invasive species of concern.

NOTE: Forest Service approved erosion control devices will be required during road maintenance activities (including Blading, Shaping, Ditch Cleaning, and Slide and Slough Removal) and Landing Construction. These devises may include but are not limited to check dams, silt fencing, straw bales, wattles, staked bio bags, etc. Surfacing materials: See (FP-14 Section 703), Compactions Method B as shown in T-813 also applies.

ROAD MAINTENANCE REQUIREMENTS SPECIFICATION CODES TABLE PURSUANT TO
C5.31# - ROAD MAINTENANCE REQUIREMENTS (09/2004)

Column No.	**Heading**	**Entry**	
	Any	Blank	Except as otherwise described, no entry indicates Contractor is not authorized or required to perform the work item(s).
	Any	RC	This work requirement applies only when haul of Contract related construction materials occurs.
2	Special Project Specification	Number	Entry indicates Special Project Specification which applies.
3	Travel Way	EX	Contractor shall maintain the traveled way to the width existing upon entry, or at the completion of Specified Road work.
		Numbers	Contractor shall maintain the traveled way to the standard width indicated by the entry, plus curve widening, in accordance with Section T-811. If required, the road template shall be shaped to this width and to the designated cross slope before haul and during recurring maintenance.
		IS, C, OS, F, or AI	Cross slopes are designated as: IS (Inslope), C (Crown), OS (Outslope), F (Flat), AI (As Is).
		A or B	If compaction is required.
4	Brush and Log Out	Numeric & R and or L	Contractor shall remove brush for specified width on either or both the right (R) side or left (L) side of road.
		As Staked	Limits of brushing are as staked or marked in the field.
		OPT	Contractor may use hand or mechanical means of brushing.
		H	Only hand brushing may be used.
5	Surfacing	Aggregate Grading	Contractor shall place surfacing on roads listed according to the grading indicated.
		D	Contractor is to make deposits for listed road maintenance, including surface rock replacement.
6	Dust Abatement	OPT	Product selection is Contractor's choice from those listed in Section T-812.
		Product Abbr.	Unless otherwise agreed, Contractor is restricted to product listed corresponding to the abbreviation shown in Section T-812; (i.e., LigS = Lignon Sulfonate) Application rates are estimated amounts.
		EX	Contractor shall abate dust on the existing width.
		Numbers	Contractor shall abate dust to the width indicated by entry.
7	Seasonal Maintenance	W	Waterbars and/or crossditching shall be required prior to expected seasonal precipitation.
		B	Entrance barriers shall be installed by Contractor prior to nonuse periods.
8	Snow Removal	TS	Snowplowing authorized for Contractor's Operations without recreation access being provided per Section T-803 requirements.
		JU	Snowplowing authorized, but must provide for recreation joint use per Section T-803 requirements.
		Blank	Snowplowing is not authorized. Forest Service may authorize plowing by permit when not in conflict with other uses.
9	Post Haul	P	P denotes that work is Contractor's Responsibility to perform.

C5.32# - ROAD MAINTENANCE DEPOSIT SCHEDULE *(08/2012)*

Other provisions herein notwithstanding, when Forest Service requests payment in lieu of Contractor's performance of road maintenance, Contractor shall make Required Deposits (16 USC 537) for current and/or deferred road maintenance. Such deposits are based on the estimated volume and distance hauled and Contractor's commensurate use of each road listed in the Road Maintenance Plan in C5.31#.

Contractor and Forest Service may agree in writing on adjustment of such rates. If Contractor uses roads under jurisdiction of Forest Service other than those listed in the Road Maintenance Plan, Forest Service shall establish rates commensurate with Contractor's use of such roads.

The Required Deposits for Forest Service work in lieu of Contractor performance are **N/A** per **Ton** for recurrent maintenance, and **$.53** per **Ton** for deferred maintenance.

The following table lists who Contractor will make deposits for road maintenance to, and the rate per unit of measure of the deposit. The Road Maintenance Agreement is available for inspection at the Forest Supervisor's Office.

Deposit Made To	Rate	Unit of Measure
N/A		

C6.315# - PROJECT OPERATION SCHEDULE *(05/2005)*

Unless otherwise agreed to between Contractor and Forest Service, Contractor's Operations shall be performed in accordance with the following schedule.

See attached schedule.

SCHEDULE PURSUANT TO C6.315# - PROJECT OPERATION SCHEDULE (5/2005)

Subdivision	**Operating Conditions**	**Purpose**
All	All ground-based equipment operations will only be allowed between June 1 and October 31.	Soil Protection
All Roads	Soil-disturbing road maintenance or specified reconstruction shall only be allowed between June 1 and October 31.	Stream Protection
Road 3510620	Log and Rock Haul will only be allowed between June 1 and October 31.	Stream Protection
152, 172, 173, 196	All operations will only be allowed between July 16 and February 28.	Northern Spotted Owl
All	Notify Forest Service 14 days prior to starting work that will affect Recreation use in the Contract Area.	Public Safety
All	Felling, Hauling and Road Reconstruction/maintenance is prohibited on weekends from Friday 12 P.M. through Monday 12 A.M. and on Federal holidays.	Public Safety
107, 109, 110, 113	Necessary permits from Hood River County, as described in C5.12#, need to be obtained prior to starting any operations.	Right-of-way

C6.405 - ALTERNATE REMOVAL OF INCLUDED TIMBER *(05/2005)*

Contractor and Forest Service may agree to alternate removal requirements of Included Timber contained in A2. Alternate removal requirements are to be set forth in an agreement signed by both Contractor and Contracting Officer. The terms of the agreement binds both parties and becomes part of the stewardship contract.

The development and execution of the agreement is based upon the determination by the Contracting Officer that removal of Included Timber is economically impractical if Contractor has no ready market for such logs in the tributary area. A tributary area is defined as the area in which the Contractor and competitors regularly deliver saw logs, or 200 miles from the Contract Area, whichever distance is greater.

The agreement for alternate removal requirements shall be executed prior to removing any timber from the Subdivisions included in the agreement. Alternate removal requirements shall apply only to whole units and not to portions of units. All material meeting alternate removal specifications shall be cut and removed to locations designated in the agreement.

Volumes of material with alternate removal requirements will be determined from the National Cruise report for the project. Contractor will be charged for the following:

a) stumpage value at current contract rates of the alternatively removed timber;
b) plus the cost of other work required by the Forest Service to dispose of alternatively removed material;
c) plus the difference between the appraised transportation cost of the Sawtimber and/or Nonsawtimber material involved and the appraised transportation cost of the alternative;
d) minus any work required to be completed by the Contractor associated with alternate removal requirements.

Charges will be debited to the Contractor's Integrated Resource Account.

Upon acceptance of the alternate removal requirements, the Subdivision will be removed from the Contract Area under B6.36.

Title to material included in the alternate removal agreement shall remain with the Forest Service.

C6.41# - SPECIFIC REQUIREMENTS *(05/2005)*

Notwithstanding B6.41, B6.411, B6.5 and B6.61, felling objectives shall be accomplished by the type of felling methods and equipment listed herein. Methods or equipment other than those specified may be approved. For Subdivisions shown in the following table, Contractor shall submit a cutting plan for Forest Service acceptance, prior to the start of felling operations.

See attached Table.

TABLE PURSUANT TO C6.41# - SPECIFIC REQUIREMENTS (05/2005)

FELLING METHODS	SUBDIVISIONS
1. Trees located outside of Subdivision boundaries that need to be felled for safety or operational reasons shall be left where felled.	All
2. Directional felling methods are required. Trees shall be felled away from Subdivision boundaries. Any felled portion of trees which fall outside the Subdivision boundary into an area of a buffered streamcourse shall be left in the restricted area.	All
3. Leave limbs attached. Leave tops attached to last log.	All
FELLING EQUIPMENT	**SUBDIVISIONS**
If included in the Technical Proposal and accepted by the Forest Service, the use of a harvester/processor may be used on slopes less than 30%. Mechanized felling equipment shall not operate within 100 feet of streams, seeps, springs or wetlands while conducting logging operations. No refueling of machinery within 150 feet of streams, seeps, springs or wetlands.	All

C6.42# - YARDING/SKIDDING REQUIREMENTS *(05/2005)*

Contractor shall submit for Forest Service approval a Yarding/Skidding Plan prior to the start of felling operations. Requirements other than those specified in the following table may be approved. When appropriate, such approval shall include adjustments in Current Contract Rates and revision of the Contract Area Map. In no such case shall the adjustments result in Current Contract Rates less than Base Rates.

Location of all skid roads and trails, tractor roads, skyline corridors, mechanized harvester trails, forwarder roads, and other log skidding facilities, shall be approved prior to their use or construction.

See attached table for requirements.

TABLE PURSUANT TO C6.42# - YARDING/SKIDDING REQUIREMENTS (5/2005)

YARDING/SKIDDING REQUIREMENTS	SUBDIVISIONS
Ground-based Yarding - If included in the Technical Proposal and accepted by the Forest Service: 1. Skid trails shall be located, as much as possible, on old skid trails used in previous logging operations. 2. Ground-based skidding equipment shall not operate on slopes greater than 30%. 3. Generally skid trails shall be spaced a minimum of 150 feet apart, except where converging at the landing. 4. Ground-based skidding equipment shall not operate within 100 feet of streams, seeps, springs or wetlands while conducting logging operations.	All
Yarding of tops and limbs required.	All
No refueling of machinery within 150 feet of streams, seeps, springs or wetlands.	All
All downed logs 20 inches diameter or greater at the small end currently in Subdivisions will be retained. These downed logs may be moved within the Subdivision to facilitate skidding operations.	All

C6.6# - EROSION CONTROL AND SOIL TREATMENT BY CONTRACTOR *(03/2017)*

Erosion prevention and control work required by B6.6, shall be completed within 15 calendar days after yarding/skidding operations related to each landing are substantially completed or after Forest Service designation on the ground of work where such designation is required hereunder. Said time limit shall be exclusive of full days lost in Contractor's Operations due to causes beyond Contractor's control. Such on the ground designation shall be done as promptly as feasible unless it is agreed that the location of such work can be established without marking on the ground. After September 15, and as long thereafter as operations continue, the work shall be done as promptly as practicable. Damage resulting from Contractor's Operations due to failure to perform required work shall be repaired by Contractor.

On slopes greater than **30** percent, erosion control measures will be done with methods other than mechanized equipment, unless otherwise agreed.

Where soil has been disturbed or displaced on Contract Area by Contractor's Operations and where measures described in B6.6 will not result in satisfactory erosion control or where subsoiling is shown on Contract Area Map, the following shall be performed. If applicable, timing of the work shall be coordinated with required scarification or subsoiling.

(a) Where staked or otherwise marked on the ground by Forest Service, seed and mulch will be applied as indicated in the attached seeding and mulching schedule. All applications shall be current and done during the period from **April 15** to **September 15** , unless otherwise agreed to. Applications shall be done only during favorable conditions. If Contractor and Forest Service agree, seed can be applied and covered within 10 days of ground disturbance, and may be done outside the required periods.

(b) Where shown on Contract Area Map, landings, Temporary Roads and/or skidtrails/roads shall be scarified to a depth of **12** inches to provide a seedbed for grass seed and mulch. Seed and mulch shall be spread evenly at the rates shown in the table. When the seed and mulch are applied in separate operations, the second or third operations shall be within 10 days of the first or second.

(c) Where shown on Contract Area Map, landings, Temporary Roads, and skid trails/roads used by Contractor shall be subsoiled to a minimum depth of **N/A** inches, except that Forest Service may agree to lesser depths. Each subsoiler shank shall be equipped with a shoe and wings which has a total width of at least **N/A** inches. The design of the shank and wings will be such that the treated, compacted soil is slightly lifted and well-fractured rather than plowed, mixed, or displaced. The distance between subsoiler shank passes shall not exceed **N/A** inches. Treated areas shall span the total width of compaction. Subsoiling shall be kept reasonably current and shall be done during Normal Operating Season unless otherwise agreed.

(d) When agreed to, Contractor may use alternate methods of erosion control. Seed shall meet current Forest Service requirements, with the additional requirement that no seed containing any noxious weed seed in excess of established state limitations as listed in the current "State Noxious Weed Requirements Recognized in the Administration of the Federal Seed Act" publication will be used (commonly referred to as the "all states" noxious weed seed list). Seed shall be furnished separately or in mixture in standard containers clearly marked with: (1) seed name; (2) lot number; (3) net weight; (4) percentages of purity and of germination (in case of legumes, percentage of germination to include hard seed); (5) percentage of weed seed content; and (6) certification that no noxious weed seeds in excess of established state standards are present. The Contractor shall furnish the Government duplicate signed copies of a certificate, signed by a Registered Seed Technologist or Seed Analyst (certified through either the Association of Official Seed Analysis or the Society of Commercial Seed Technologists), certifying that each lot of seed has been tested in accordance with the Association of Official Seed Analysts Standards within 12 months prior to date of application. This certificate shall include (1) name and address of laboratory, (2) date of test, (3) lot number for each kind of seed, (4) name of seed, (5) percentage of germination, (6) percentage of purity, (7) percentage of weed seed content, and (8) certification that no noxious weed seeds in excess of established state limitations are present in any kind of seed.

Legume seed shall be inoculated with approved cultures in accordance with the instructions of the

manufacturer.

No seed may be applied without prior written approval by the government.

(e) Contractor may be required to seed areas disturbed by harvest activities to prevent the spread of noxious weeds, or the establishment of new areas.

See attached application schedule.

APPLICATION SCHEDULE PURSUANT TO C6.6# - EROSION CONTROL AND SOIL TREATMENT BY CONTRACTOR (07/2008)

	AREAS	*SEED*		*FERTILIZER*		*MULCH*	
SUBDIVISION OR UNIT NUMBER	*A) SKID TRAILS B) FIRELINES C) TEMP. ROADS D) LANDINGS E) CUT AND FILL SLOPES*	*APPLICATION*		*APPLICATION*		*APPLICATION*	
		SPECIES 1/ MIXTURE	*LBS/AC*	*TYPE 2/*	*LBS/AC*	*TYPE 3/*	*LBS/AC*
All	A, C, D, and E Cut and fill slopes	Seed provided by the Forest Service	25-30	N/A	N/A	Certified weed-free straw/ mulch or Slash	3000

The Contractor will be required to pay a co-op deposit of $0.02/Ton for the cultivation and harvest of replacement seed of native species for use on future contracts. Application rate is determined by seed species supplied.

1/ For contracts in Oregon, the seed shall meet the State certification specifications. Seed must be packaged in containers carrying official certification labels sewn in, glued to, or printed upon the container, with the following information:

1. Variety (if certified as to variety) and kind.
2. Quantity of seed (pounds or bushels).
3. Class of certified seed (blue tags for certified seed).
4. Inspection or lot number traceable to the certifying agency's records.

For contracts in Washington, the seed shall be labeled as "Prohibited and Restricted Noxious Weed Free for the State of Washington." The contractor shall furnish a copy of the seed analysis.

For state of California lands in Region 6, seed must be certified by the state of California, or by an independent agency or company that is approved by the state of California for “prohibited and restricted noxious weed free for the state of California.”

For mixtures of seed, each ingredient in excess of 5 percent must be listed with its percentage by weight and its germination percentage.

Legumes must be innoculated with nitrogen fixing bacteria before planting. The label must show the expiration date of the innoculant.

All seed treated with a fungicide or pesticide must be labeled that it is "treated" giving the name of the chemical used, and an appropriate warning or a caution statement.

2/ Fertilizer shall be a standard commercial fertilizer with guaranteed analysis of contents clearly marked on containers.

3/ Mulch shall meet the appropriate State's certification specifications, with evidence of its certification traceable to the certifying agency's records.

C6.7 - SLASH DISPOSAL *(03/2017)*

As used in the following Subsections, the term "slash" is vegetative debris including, but not limited to, cull logs, blasted or pushed-out stumps, chunks, broken tops, limbs, branches, rotten wood, damaged brush, damaged or destroyed reproduction, saplings or poles, resulting from Contractor's Operations, including construction of roads or other improvements under this contract. Slash resulting from the construction of Specified Roads shall be disposed of as provided for in Section 201 of the Standard and Special Specifications and as shown in Drawings.

Any burning of slash or refuse by Contractor is subject to C7.201.

Forest Service may agree to substitute methods of slash disposal if such substitute methods will give equally satisfactory results.

Forest Service may waive specific slash treatment requirements of the Contractor. Contractor's Integrated Resource Account will be charged for any slash treatment requirements waived. The amount of such charges will be determined by Forest Service prior to felling operations in each Subdivision.

C6.74# (Option 2) - SLASH TREATMENT REQUIREMENTS *(06/2008)*

Contractor shall pile, burn, yard, construct firelines or otherwise treat slash defined in C6.7, within designated areas. Work required of Contractor shall be in accordance with the following slash plan and specifications, and the Contract Area Map.

Unless otherwise agreed, or shown in the attached slash plan or specifications, when Included Timber is removed during Normal Operating Season, required slash work shall be completed within 30 days of removal of approximately three-quarters of the volume in the unit. When Included Timber is removed outside Normal Operating Season, required work will be completed within 30 days of the beginning of the next Normal Operating Season.

See following specifications.

SPECIFICATIONS PURSUANT TO C6.74# (Option 2) - SLASH TREATMENT REQUIREMENTS (OPTION 2) (06/2008)

Piling of Landing Slash

1. Slash to be Piled

All operation slash meeting the following specifications shall be piled:

a. Over 1 inch in diameter and over 2 feet in length.
b. Over 10 feet in length regardless of diameter.
c. Over 6 inches in diameter regardless of length.
d. Damaged reproduction as designated by Forest Service.

2. Construction and Size of Piles

Unless otherwise agreed, all slash shall be piled as compact as possible and free of dirt and noncombustible material. Any mechanical slash piling shall be done with equipment capable of picking up (grasping) slash material and piling. Piles shall have a good base to prevent toppling over and should be wider than they are tall. At a minimum, piles should be approximately 6-feet wide at base and approximately 6-feet high. Pile branches with their butt-ends towards the outside and overlap them as to form a series of dense layers piled upon each other. Any material protruding more than 5 feet from the perimeter of the pile will be cut off and placed in the pile. Use a mixture of sizes and fuels throughout the pile.

3. Location of Piles

Pile size and location shall be such to minimize damage to residual trees. Piles shall be located at least 20 feet from the bole of any tree. Piles shall not be placed on or in the following areas: pavement, road surface, ditch lines, within 100-feet of a stream course, on rocks, stumps, or on sections of large down logs.

C6.815 - THIRD PARTY SCALING SERVICES *(09/2004)*

Notwithstanding the requirement for Forest Service or parties under contract to Forest Service to provide Scaling services under B6.81, Scaling designated in A10 shall be conducted by a third party Scaling organization approved by Forest Service. Scaling shall be done in accordance with A9 and Contractor shall bear costs for Scaling service.

In the event third party Scaling service is suspended for causes such as strikes, termination of third party's approval to Scale National Forest logs by Forest Service, or Contractor's failure to pay third party Scaling costs, hauling operations shall be suspended until agreed alternate Scaling services are provided or service by third party is resumed.

When an approved alternate Scaling location pursuant to B6.811 does not have an approved third party scaling organization as a commonly used Scaling services provider, Forest Service or parties under contract to Forest Service shall provide Scaling services at the approved alternate location. In such an event, the cost of waived third party Scaling listed in A10 shall be charged to Integrated Resource Account.

If Forest Service and Contractor agree in writing that another party under contract to Forest Service will perform Scaling, the contract will be modified to include C6.816# and Integrated Resource Account will be charged for such Scaling.

C6.842 (Option 1) - USE OF PAINT BY CONTRACTOR *(06/2006)*

Notwithstanding B6.842, use of paint by the Contractor within the Contract Area in the same color(s) used by the Forest Service in the preparation and administration of the contract will be by written approval of the Forest Service.

C6.851 - WEIGHT OF LOST LOADS *(04/2014)*

Contractor shall present all loads for weighing and shall furnish a weight ticket for each load pursuant to a weighing services agreement. Any load for which a weight ticket is not provided, or the weight ticket is incomplete or unreadable, or does not include the Forest Service load receipt number, shall be considered a lost sample load with a net weight equal to the load with the heaviest net weight presented during the billing period, as established by the Forest Service.

C6.9# - STEWARDSHIP PROJECTS *(09/2004)*

Performance of stewardship projects shall be in accordance with the following specifications.

Stewardship Projects

LIST OF STEWARDSHIP PROJECTS PURSUANT TO C6.9# - STEWARDSHIP PROJECTS (09/2004)

PROJECT NUMBER 001 - Leave Tree Marking

See requirements and specifications in Attachment G

PROJECT NUMBER 002 – Reduce Fuel Loading

See requirements and specifications in Attachment H

C7.1 - PLANS *(05/2005)*

The plan shall state how Contractor's representative or alternates will be contacted in a fire emergency, both during periods of operation and at other times such as evenings or weekends. Contractor shall certify compliance with specific fire precautionary measures included as Subsections under C7.2 - Specific Fire Precautions, before beginning operations during Fire Precautionary Period (closed season) and shall update such certification when operations change.

If helicopter yarding is required, the plan shall include a schedule of rates mutually agreed to for computing Contractor costs incurred toward meeting Contractor's obligations under A14, or for paying for helicopters controlled by Contractor and used under Forest Service direction for suppressing Operations Fires or other fires on Contract Area, excluding Negligent Fires.

C7.11 - ADDITIONAL AREA OF FIRE RESPONSIBILITY *(05/2005)*

The area within 200 feet slope distance of the center line of any road constructed or reconstructed under this contract on National Forest lands outside of Contract Area shall be considered as a part of Contract Area in connection with responsibilities under B7.3 and B7.4 until the road has been accepted in writing by Forest Service.

C7.2 - SPECIFIC FIRE PRECAUTIONS *(05/2005)*

When the industrial fire precaution level is I or higher, unless waiver is granted under C7.22, specific required fire precautionary measures are as follows:

A. Fire Security.

Contractor shall designate in writing a person or persons who shall perform fire security services listed below on Contract Area and vicinity. The designated person will be capable of operating Contractor's communications and fire fighting equipment specified in the contract, excluding helicopters, and of directing the activities of Contractor's personnel on Forest fires. Such person must report any fire detected to Forest Service within 15 minutes of detection. In lieu of having the designated person perform the required supervisory duties, Contractor may provide another person meeting the qualifications stated above to direct the activities of Contractor's personnel and equipment during all fire fighting activities.

Services described shall be for at least 1 hour from the time Contractor's Operations are shut down. For the purposes of this provision, personnel servicing equipment, and their vehicles, who are not engaged in cutting or welding metal are excluded.

Fire security services shall consist of moving throughout the operation area or areas constantly looking, reporting, and taking suppression action on any fires detected. Where possible, the designated person shall observe inaccessible portions of helicopter operating areas from vantage points within or adjacent to Contract Area.

Contractor shall furnish fire security services based on the predicted industrial precaution level, obtained by Contractor from the appropriate Ranger District Headquarters. If predictions made after 6:00 p.m. local time, are significantly different than originally estimated, Forest Service will inform Contractor when changes in fire security services are indicated.

B. Fire Extinguisher and Equipment (on Trucks, Tractors, Power Saws, etc.).

(a) Each yarder or loader equipped with an internal combustion engine or other spark emitting source shall be equipped with a readily accessible fire extinguisher, with an Underwriter's Laboratory (UL) Rating of at least 5 B,C.

(b) All power-driven equipment operated by Contractor on National Forest land, except portable fire pumps, shall be equipped with one fire extinguisher having a UL rating of at least 5 B,C and one "D" handled or long handled round point shovel, size O or larger. In addition, each motor patrol, truck and passenger-carrying vehicle shall be equipped with a double-bit axe or Pulaski, 3-1/2 pounds or larger.

(c) Equipment required in (a) and (b) shall be kept in a serviceable condition and shall be readily available.

(d) Each gasoline power saw operator shall be equipped with a pressurized chemical fire extinguisher of not less than 8-ounce capacity by weight, and one long handled round point shovel, size O or larger, except at a landing where a suitable fire extinguisher and shovel are immediately available. The extinguisher will be kept in possession of the saw operator at all times. The shovel shall be accessible to the operator within 1 minute.

(e) Each helicopter shall be equipped with one fire extinguisher having a UL rating of at least 5 B,C mounted inside the aircraft within reach of the pilot's operating position.

(f) One refill for each type or one extra extinguisher sufficient to replace each size extinguisher required on equipment shall be safely stored in the fire tool box or other agreed upon place on Contract Area that is protected and readily available.

(g) At each area where helicopters are being serviced or supplied, a carbon dioxide fire extinguisher with a UL rating of at least 20 B,C will be provided on the site and placed where it is available for immediate use.

C. Spark arresters and mufflers.

Each internal combustion engine shall be equipped with a spark arrester qualified and rated under USDA Forest Service Standard 5100-la as shown in the National Wildfire Coordination Group Spark Arrester Guide, unless it is:

(a) Equipped with a turbine-driven exhaust supercharger such as the turbocharger. There shall be no exhaust bypass.

(b) A multi-position engine, such as on power saws which must meet the performance levels set forth in the Society of Automotive Engineers (SAE) "multi-positioned small engine exhaust fire ignition standard, SAE recommended practice J335B" as now or hereafter amended.

(c) A passenger carrying vehicle or light truck, or medium truck up to 40,000 GVW, used on roads and equipped with a factory designed muffler complete with baffles and an exhaust system in good working condition.

(d) A heavy duty truck, such as a dump or log truck, or other vehicle used for commercial hauling, used only on roads and equipped with a factory designed muffler and with a vertical stack exhaust system extending above the cab.

Exhaust equipment described in this Subsection, including spark arresters and mufflers, shall be properly installed and constantly maintained in serviceable condition.

D. Fire Tools.

Contractor shall furnish serviceable fire fighting tools in a readily accessible fire tool box or compartment of sound construction with a hinged lid and hasp so arranged that the box can be secured or sealed. The box shall be red and marked "Fire Tools" in letters at least 1 inch high. It shall contain a minimum of:

(a) Two axes or Pulaskis with a 32 inch handle.

(b) Three adze eye hoes. One Pulaski may be substituted for one adze eye hoe.

(c) Three long handled, round point shovels, size 0 or larger.

E. Tank Truck.

Contractor shall provide a tank truck or trailer, containing not less than 300 gallons of water, during yarding, skidding, loading, land clearing, right-of-way clearing, mechanical falling, and mechanical treatment of slash. Such tank truck or trailer shall be maintained in a serviceable condition and located within 10 minutes, round trip, from each operating side during Fire Precautionary Period (closed season), except as provided under B7.21.

The tank truck or trailer shall be equipped with a pump capable of discharging 20 gallons of water per minute, using a 1/4 inch nozzle tip, through a 50 foot length of poly or rubber lined hose. In addition, 500 feet of serviceable hard rubber poly or rubber lined or FJRL hose of not less than 1 inch outside diameter, fitted with a nozzle capable of discharging a straight stream of 1/4 inch diameter and a spray pattern shall be immediately available for use. The tank, pump, nozzle and at least 250 feet, of the total 500 feet of hose, shall be connected and ready for use at all times. Synthetic hose may be used by agreement.

If a trailer is used, it shall be equipped with a hitch to facilitate prompt movement. A serviceable tow vehicle shall be immediately available for attachment to the trailer and must meet the time requirements stated above. Such truck or trailer shall be equipped to operate for a minimum of 8 hours.

Where designated on Contract Area Map, Contractor shall provide a tank trailer or water source and pumping equipment, including accessories, which can be lifted and transported by the yarding system. The component parts shall meet all specifications above. The tank trailer or water supply and pumping accessories shall be deliverable to a fire, in area of operations, within 15 minutes of detection.

In lieu of the above tank trailer or water supply for helicopter operations, Contractor may provide a suitable helicopter water bucket with a 300 gallon capacity. When Contractor provides a water bucket, a water source shall be provided within 5 minutes round trip flight time from operating side.

F. Communications.

During Contractor's Operations, excluding powersaw falling and bucking, Contractor shall provide adequate two-way communication facilities to report a fire to Forest Service within 15 minutes of detection. Citizen Band radios (CB's) are not considered adequate two-way communications because FCC Regulations prohibit commercial use.

G. Smoking and Open Fire Restrictions.

Smoking and fires shall be permitted only at the option of Contractor. Contractor shall not permit open fires on Contract Area without advance permission in writing from Forest Service.

H. Blasting.

Blasting shall be permitted only for road construction purposes unless advance permission is obtained from Forest Service.

Whenever the Industrial Fire Precaution Level is II or greater, a fire security person equipped with a long handled round point No. 0 or larger shovel and a 5 gallon backpack pump can filled with water, will stay at location of blast for 1 hour after blasting is done. Blasting may be suspended by Forest Service, in areas of high rate of spread and resistance to control.

Fuses shall not be used for blasting. Explosive cords shall not be used without permission of Forest Service, which may specify conditions under which such explosives may be used and precautions to be taken.

I. Compliance with State Fire Laws.

Listing of specific fire precautionary measures in the foregoing Subsections is not intended to relieve Contractor in any way from compliance with State fire laws covering fire prevention and suppression equipment, applicable to Contractor's Operations.

J. Aircraft Communications.

Every aircraft used in conjunction with Contractor's Operations shall be equipped with an operable radio system. The radio system shall be capable of transmitting and receiving on VHF frequency 122.85 Megahertz (MHz) with a minimum output of 5 watts at the transmitter. The system shall be located and installed so that the pilot can operate it while flying. A shielded all-weather broad-band antenna shall be part of the system. Radio and antenna shall be properly installed and maintained.

Upon discovery or notification of a fire on Contract Area, all aircraft pilots controlled by Contractor shall monitor VHF frequency 122.85 MHz when within 5 miles of a fire and broadcast their intentions.

K. Logging Block Equipment.

Contractor shall provide a serviceable 5 gallon backpack pump full of water, one axe, and one long handled round point shovel, size 0 or larger, at each haulback block through which a running line passes.

The area below such blocks must be kept clear of all flammable debris under 4 inches in diameter for a distance of 6 feet in all directions. Material larger than 4 inches that poses a fire risk, such as punky logs, must also be removed.

Contractor shall avoid line-rub on rocks or woody material which may result in sparks or sufficient heat to cause ignition of fire.

C7.201 - BURNING BY CONTRACTOR *(06/2006)*

Notwithstanding the Fire Precautionary Period limitation of B7.2, Contractor is required to obtain written permission from Forest Service prior to any burning on the National Forest Lands.

C7.22 - EMERGENCY FIRE PRECAUTIONS *(06/2018)*

Contractor shall restrict operations in accordance with the Industrial Fire Precaution Levels attached. Forest Service may change the Industrial Fire Precaution Levels to other values upon revision of the National Fire Danger Rating System and may change the specific Industrial Fire Precaution Levels when such changes are necessary for the protection of the National Forest. When sent to Contractor, the revised Industrial Fire Precaution Levels will supersede the attached levels.

INDUSTRIAL FIRE PRECAUTIONS SCHEDULE

LEVEL I. FIRE SEASON
Fire season requirements are in effect. In addition to other fire prevention measures, a Firewatch is required at this and all higher levels unless otherwise waived

LEVEL II. LIMITED SHUTDOWN
The following may operate only between the hours of 8 P.M. and 1 P.M.:

- Power saws except at loading sites;
- Feller-bunchers with rotary head saws;
- Cable yarding;
- Blasting;
- Welding, cutting, or grinding of metal.

LEVEL III. RESTRICTED SHUTDOWN
Cable yarding is prohibited except that gravity operated logging systems employing non-motorized carriages or approved motorized carriages (defined below), may operate between 8 P.M. and 1 P.M. when all blocks and moving lines are suspended 10 feet above the ground except the line between the carriage and the chokers and during rigging.

The following are permitted to operate between the hours of 8 P.M. and 1 P.M. where mechanized equipment capable of constructing fire line is immediately available to quickly reach and effectively attack a fire start:

- Ground-based operations (defined below);
- Power saws on ground-based operations;
- Rotary head saw feller-bunchers with a continuous Firewatch;
- Non-rotary head saw feller-bunchers;
- Tethered logging systems (defined below).

The following are permitted to operate between the hours of 8 P.M. and 1 P.M.:

- Power saws at loading sites;
- Loading or hauling of any product or material;
- Blasting;
- Welding, cutting, or grinding of metal;
- Any other spark emitting operation not specifically mentioned.

LEVEL IV. COMPLETE SHUTDOWN
All operations are prohibited.

NOTE: Where hauling involves transit through more than one shutdown/regulated use area, the precaution level at the woods loading site shall govern the level of haul restriction, unless otherwise prohibited by other than the IFPL system. Under IFPL III, all trucks must be loaded and leaving the loading site no later than 1 P.M.

Waivers:

Advance written waiver of the above precautions may be issued by the Contracting Officer or Forest Service Representative for any and all activities. Activities for which waivers may be issued include, but are not limited to:

>Mechanized loading and hauling.

>Road maintenance such as sprinkling, graveling, grading and paving.

>Cable yarding using gravity systems or suspended lines and blocks, or other yarding systems where extra prevention measures will significantly reduce the risk of fire.

>Power saws at loading sites or in felling and bucking where extra prevention measures will significantly reduce the risk of fire.

>Maintenance of equipment (other than metal cutting and welding) or improvements such as structures, fences and powerlines.

Contractor shall submit written waiver, or substitute precautions under B7.21, with specific measures to be taken by Contractor to reduce the risk of ignition, and/or the spread of fire. The Contracting Officer or Forest Service Representative shall consider site specific weather factors, fuel conditions, and specific operations that result in less risk of fire ignition and/or spread than contemplated when precaution level was predicted. Consideration shall also be given to measures that reduce the precaution levels above. Contractor shall assure that all conditions of such waivers or substitute precautions are met.

Forest Service will inform Contractor when changes in restrictions or industrial precautions are indicated.

IFPL Definitions:

>Approved motorized carriage: a cable yarding system employing a motorized carriage with two fire extinguishers, each with at least a 2A:10BC rating, mounted securely on opposite sides of the carriage, an emergency motor cutoff, and an approved exhaust system.

>Cable yarding system: a yarding system employing cables, and winches in a fixed position.

>Fire Season: that season of the year when a fire hazard exists as declared by the responsible agency official.

>Ground-based operations: mobile and stationary equipment operations other than cable yarding systems, including but not limited to tractor/skidder, feller-buncher, forwarder, processor, and shovel operations.

>Loading sites: a place where any product or material (including, but not limited to logs, firewood, slash, soil, rock, poles, etc.) is placed in or upon a truck or other vehicle. Loading site shall govern the level of haul restriction, unless otherwise prohibited by other than the industrial precaution level system.

>Tethered logging system: winch-assisted, cable-assisted, traction-assisted, etc., which enable ground-based timber harvesting machines to operate on steep slopes.

C8.10 - DISCLAIMER OF EXPRESSED OR IMPLIED WARRANTY *(05/2005)*

Contractor and Forest Service hereby agree, acknowledge, and accept that there is no expressed or implied warranty provided by the Forest Service that guarantees the Contractor will be allowed to complete the removal of products sold under the terms of the contract. Upon execution of the contract, Contractor hereby acknowledges the acceptance of the risk that this contract is subject to interruption or termination as a result of litigation associated with the environmental analysis process used by the Forest Service in the planning of this project. If such interruption or termination occurs due to litigation, Contractor agrees to accept as full compensation for such interruption remedies pursuant to B8.33, or for termination remedies pursuant to B8.34.

C8.21 - CONTRACT TERM ADJUSTMENT *(07/2016)*

"Contract Term Adjustment" (CTA) means adjustment only as provided for in the three circumstances described in this subsection. Under these circumstances, the contract term shall be adjusted in writing to include additional calendar days in one or more normal operating seasons equal to the actual time lost, except as limited by paragraph (2) in this subsection.

To qualify for such adjustment, contractor shall give written notice of the lost time not later than 30 days after the end of the normal operating season in which time was lost and at least 10 days before termination date. Contracting officer shall make prompt written acknowledgment of such notice, indicating concurrence with the number of days in the notice or the number of days the Forest Service considers as qualifying for the adjustment. Lost parts of days shall be disregarded in computing time lost. The three circumstances qualifying for a CTA are:

(1) Contractor experiences delay in starting operations scheduled under B6.31 or interruptions in active operations, either of which stops such operations for 10 or more consecutive days during a normal operating season due to causes beyond the contractor's control, including, but not limited to, acts of God, acts of the public enemy, acts of the Government, labor disputes, fires, insurrections, or floods. Operations subject to these causes include:

(i) Removal of the included timber from contract area through curtailment in felling and bucking, yarding, skidding, loading, hauling, or road construction; or

(ii) Performance of stewardship projects shown in A4c.

(2) Causes described in paragraph (1) substantially affect the disposition or processing of included timber during the normal operating season through their effects on primary timber processing facilities, with a resulting delay of 60 days or more in use of such facilities. In such event, the CTA shall not extend for more than 12 consecutive months.

(3) (i) Contracting officer requests the contractor, in writing, to delay or interrupt operations during the normal operating season for any purpose other than suspension under B4.4 or B9.3; or

(ii) Contractor suffers a delay or interruption of the contractor's operations described in paragraph (1)(i) or (ii) because of a fire emergency closure ordered by Forest Service (or another agency on its behalf), and the total of such lost time is 10 or more days during any normal operating season.

If the termination date is adjusted, as described in this subsection, and later extended under B8.23, the appraisal for the extension shall be made as of the unadjusted termination date, but the date on which the new rates become effective, if higher than current contract rates immediately prior to the termination date, shall be the adjusted termination date.

C8.212 - MARKET-RELATED CONTRACT TERM ADDITION *(11/2008)*

The term of this contract may be adjusted when a drastic reduction in wood product prices has occurred in accordance with 36 CFR 223.52. The Producer Price Index used to determine when a drastic reduction in price has occurred is stated in A20. Contractor will be notified whenever the Chief determines that a drastic reduction in wood product prices has occurred. If the drastic reduction criteria specified in 36 CFR 223.52 are met for 2 consecutive calendar quarters, after contract award date, Contracting Officer will add 1 year to the contract term, upon Contractor's written request. For each additional consecutive quarter such a drastic reduction occurs, Contracting Officer will, upon written request, add an additional 3 months to the term during Normal Operating Season, except that no single 3-month addition shall extend the term of the contract by more than one year. Contracting Officer must receive Contractor's written request for a market-related contract term addition before the expiration of this contract.

No more than 3 years shall be added to a contract's term by market-related contract term addition unless the following conditions are met:

(i) The contract was awarded after December 31, 2006; and

(ii) A drastic reduction in wood product prices occurred in at least ten of twelve consecutive quarters during the contract term, but not including the quarter in which the contract was awarded.

For each qualifying quarter meeting the criteria in paragraphs (i) and (ii) of this provision, the Forest Service will, upon the Contractor's written request, add an additional 3 months during the normal operating season to the contract, except no single 3-month addition shall extend the term of a contract by more than 1 year.

In no event shall a revised contract term exceed 10 years as a result of market-related contract term addition.

Additional contract time may not be granted for those portions of the contract that have a required completion date or for those portions of the contract where Contracting Officer determines that the timber is in need of urgent removal or that timber deterioration or resource damage may result from delay.

C8.3# - CONTRACT CHANGES (OPTION1) *(05/2005)*

Contract changes involving volumes and/or values will use a weight ratio of **3.0818** to convert net CCF cruise volumes to Tons.

C8.64 - DEBARMENT AND SUSPENSION CERTIFICATION *(03/2018)*

Pursuant to 2 CFR 180 and 2 CFR 417, Contractor shall certify and obtain certifications from its Subcontractors regarding debarment, suspension, ineligibility, and voluntary exclusion, including additional Subcontractors obtained after award of this contract. 'Subcontractors' are participants in lower tier covered transactions.

Contractor may rely upon a certification of a prospective Subcontractor that it is not proposed for debarment under 48 CFR 9.4, debarred, suspended, ineligible, or voluntarily excluded from participating in covered transactions or contracts, unless Contractor knows that the certification is erroneous.

Contractor shall keep the certifications of its Subcontractors on file until contract Termination Date and any extensions thereof, and will provide a copy at the written request of Contracting Officer. Nothing contained in the foregoing shall be construed to require establishment of a system of records in order to render in good faith the certification required by this Subsection. The knowledge and information of Contractor is not required to exceed that which is normally possessed by a prudent person in the ordinary course of business dealings.

If Contractor knowingly enters into a contract transaction with a person who is proposed for debarment under 48 CFR 9.4, suspended, debarred, ineligible, or voluntarily excluded from participation in covered transactions or contracts, in addition to other remedies available to the Government, Forest Service may pursue available remedies, including suspension and/or debarment.

Contracting Officer shall provide a copy of Forms AD-1047, Certification Regarding Debarment, Suspension and Other Responsibility Matters-Primary Covered Transactions, and AD-1048, Certification Regarding Debarment, Suspension, Ineligibility and Voluntary Exclusion-Lower Tier Covered Transactions to the Contractor.

Contractor shall complete form AD-1047 and provide to the Contracting Officer upon request.

Contractor shall require each Subcontractor to complete form AD-1048 and provide to the Contracting Officer upon request.

C8.66# (Option 1) - USE OF TIMBER *(09/2004)*

(a) This contract is subject to the Forest Resources Conservation and Shortage Relief Act of 1990, as amended (16 USC 620, et seq.).

(b) Except for **NONE** determined pursuant to public hearing to be surplus, unprocessed Included Timber shall not be exported from the United States nor used in direct or indirect substitution for unprocessed timber exported from private lands by Contractor or any person as defined in the Act (16 USC 620e).

(c) Timber in the following form will be considered unprocessed:

(i) Trees or portions of trees or other roundwood not processed to standards and specifications suitable for end product use;

(ii) Lumber, construction timbers, or cants intended for remanufacturing not meeting standards defined in the Act (16 USC 620e); and

(iii) Aspen or other pulpwood bolts exceeding 100 inches in length.

(d) Unless otherwise agreed in writing, unprocessed Included Timber shall be delivered to a domestic processing facility and shall not be mixed with logs intended for export.

(e) Prior to award, during the life of this contract, and for a period of 3 years from Termination Date, Contractor shall furnish to Forest Service, upon request, records showing the volume and geographic origin of unprocessed timber from private lands exported or sold for export by Contractor or affiliates.

(f) Prior to delivering unprocessed Included Timber to another party, Contractor shall require each buyer, exchangee, or recipient to execute an acceptable agreement that will:

(i) Identify the Federal origin of the timber;

(ii) Specify domestic processing for the timber involved;

(iii) Require the execution of such agreements between the parties to any subsequent transactions involving the timber;

(iv) Require that all hammer brands and/or yellow paint must remain on logs until they are either legally exported or domestically processed, whichever is applicable; and

(v) Otherwise comply with the requirements of the Act (16 USC 620d).

(g) No later than 10 days following the execution of any such agreement between Contractor and another party, Contractor shall furnish to Forest Service a copy of each such agreement. Contractor shall retain, for 3 years from Termination Date, the records of all sales, exchanges, or dispositions of all Included Timber.

(h) Upon request, all records dealing with origin and disposition of Included Timber shall be made available to Contracting Officer.

(i) For breach of this Subsection, Forest Service may terminate this contract and take such other action as may be provided by statute or regulation, including the imposition of penalties. When terminated by Forest Service under this Subsection, Forest Service will not be liable for any Claim submitted by Contractor relating to the termination.

Attachment Title		**Pages**
A.	T-Specifications	1-27
B.	Invasive Species of Concern List	1-1
C.	Specified Road Reconstruction Cost Summary and Schedule of Items	1-3
D.	Specified Road Reconstruction Design Plans	1-8
E.	Specification List	1-2
F.	Specified Road Reconstruction Supplemental Specifications	1-39
G.	Project 001 - Leave Tree Marking	1-2
H.	Project 002 – Reduce Fuel Loading	1-2

FOREST SERVICE

SPECIFICATIONS FOR

MAINTENANCE OF

ROADS IN

TIMBER SALES

PACIFIC NORTHWEST REGION

EM 7730-20

JUNE 2020

TIMBER SALE CONTRACT

ROAD MAINTENANCE SPECIFICATIONS

SPEC.#	DESCRIPTION	Date
T-803	Snow Removal	06/2020
T-805	Bridge Maintenance	06/2020
T-811	Blading	06/2020
T-812	Dust Abatement	06/2020
T-813	Surfacing	06/2020
T-815	Paved Surface Cleaning	06/2020
T-831	Ditch Maintenance	06/2020
T-832	Remove and End Haul Materials	06/2020
T-834	Drainage Structure Maintenance	06/2020
T-835	Roadway Drainage Maintenance	06/2020
T-836	Maintenance for Limited Use	06/2020
T-838	Maintenance for High Clearance Vehicle Use	06/2020
T-839	Maintenance for Project Use	06/2020
T-841	Vegetation Establishment	06/2020
T-842	Cutting Roadway Vegetation	06/2020
T-851	Logging Out	06/2020
T-854	Treatment and Disposal of Danger Trees	06/2020
T-891	Water Supply and Watering	06/2020
T-892	Bituminous Products	06/2020

SUPPORTING DOCUMENTS FOR MAINTENANCE SPECIFICATIONS

DESCRIPTION	DATE
Cover Content Preface	06/2020
Cover Pages	06/2020
Intent and Use Guide	06/2020

NO DRAWINGS ACCOMPANY THESE SPECIFICATIONS.

T-803 - SNOW REMOVAL (06/2020)

803.01 Description

This section provides for removal of snow from roads to facilitate logging operations and safe use.

803.02 Maintenance Requirements

1. Erect signs required by the Sign Plan in the SUPPLEMENTAL SPECIFICATIONS.

2. Perform work in a manner to preserve and protect roads and appurtenances, and prevent erosion damage to roads, streams, and other Forest values.

3. Do not undercut banks. Do not blade gravel or other surfacing material off the road.

4. Keep roadbed, drainage ditches, drain dips, and culverts functional during operations and upon completion of operations.

5. Control snow removal to identify the usable traveled way and roadbed support. Reshape over-width plowing as necessary to define the usable width.

6. Space, construct, and maintain drainage holes in the dike of snow or berm caused by snow removal operations. Place drain holes to obtain surface drainage without discharging on erodible fills.

7. Close roads to wheeled vehicles at times and in the manner specified in C(T)5.12# or the Road Rules document.

8. Upon seasonal completion of Purchaser/Contractor's Operations, effectively block the road by a snow barricade, unless otherwise approved by the Contracting Officer.

9. Remove snow for either public access or project use as established in the SUPPLEMENTAL SPECIFICATIONS and meet the following requirements:

   a. Removal for Public Access (Method JU) - Remove snow from all the traveled way, including turnouts, for safe and efficient use for both timber haul and the public. Remove intruding windfalls, debris, or slough and slide material for the full width of the traveled way and deposit out of drainages at locations designated by the Contracting Officer.

   b. Removal for Project Use (Method TS) - Remove snow from all or part of the traveled way, including enough turnouts for safe and efficient use for timber haul and to protect the road. Remove intruding windfalls, debris or slough and slide material and dispose of only as necessary to provide passage for timber transportation. Removed materials may be deposited off the traveled way or outside the traveled way at locations designated by the Contracting Officer.

   c. When directed by the Contracting Officer, replace surfacing which has been bladed off the road with in-kind material within 60 days of notification. Contracting Officer will notify Purchaser/Contractor in writing as to the cubic yard equivalent of bladed off material by the start of the Normal Operating Season.

803.03 Equipment

Purchaser/Contractor may use any type of equipment to remove snow, providing:

1. Type or use of equipment is not restricted in C(T)5.12# or Road Rules document.

2. Equipment is of the size and type commonly used to remove snow and will not cause damage to the road.

3. The use of plows or dozers to remove snow requires written approval by the Contracting Officer. Equip plows or dozers with shoes or runners to keep the dozer blade a minimum of 2 inches above the road surface unless otherwise approved by the Contracting Officer.

803.04 Ice Control

Ice control may be performed by Purchaser/Contractor when approved by the Contracting Officer in writing. Such approval will include ice control materials, application rates, and any specific requirements of use.

T-805 - BRIDGE MAINTENANCE (06/2020)

805.01 Description

This section provides for routine maintenance of bridge decks and minor approach maintenance. All approaches to be maintained will be marked in the field and approved by the Contracting Officer prior to the start of work on any bridge.

805.02 Maintenance Requirements

1. General

a. Deck Cleaning

Clean deck, running planks, caps and scuppers of curbs by sweeping, washing and/or air-blasting so that the bridge is free of debris and dirt and all drainage openings on the bridge are clear and operating as intended. Do not allow any debris or dirt into the stream. All material shall be disposed of in accordance with T-832; sites designated by the Contracting Officer and at least 100 feet from any stream, in a location that will not contribute sediment back into the stream. Smooth out and blend with adjacent area. Do not block ditches.

b. Approach and Drainage Blading

All approaches designated by the Contracting Officer shall be bladed in accordance with T-811.

c. Invasive Species

Where DESIGNATED ON THE GROUND, included in C(T)5.31#, SHOWN ON THE DRAWINGS, or as ordered by the Contracting Officer, invasive species of concern prevention practices shall be followed as listed below.

Invasive Species of Concern Prevention Practices
Refer to Attachment B for invasive species of concern; prevention practices included in B6.35 and CT6.6# or as specified by the Forest Service.

T-811 - BLADING (06/2020)

811.01 Description

This work consists of surface blading the traveled way to a condition that facilitates traffic and provides proper drainage. Blading includes shaping the crown or slope of travel way, berms, and drainage dips in accordance with this specification. Compaction is required when shown on C(T)5.31#

811.02 Maintenance Requirements

1. Timing - Perform surface blading during the contract period as often as needed to provide conditions stated for the maintenance level of the road.

2. General

   a. Blade and shape the existing traveled way and shoulders, including turnouts, to produce a surface which is uniform, consistent to grade, and crowned or cross-sloped as indicated by the character of the existing surface, unless otherwise shown in C(T)5.31#, to at least ½ inch per 1 foot of width, but not more than ¾ inch per 1 foot of width. Thoroughly loosen surfacing material to no less than 2 inches depth or the depth of potholes or corrugations. Scarification to facilitate cutting to the full depth of potholes or corrugations may be elected but will be considered incidental to blading. Do not scarify to a depth that will cause contamination of the surfacing.

   b. Apply water during blading when sufficient moisture is not present to prevent segregation. Supply, haul, and apply water in accordance with Section T-891.

   c. Shape existing native rock or aggregate surfaced drainage dips to divert surface runoff to existing outlet devices, ditches, or discharge locations.

   d. Establish a blading pattern which provides a uniform driving surface, retains the surfacing on the roadbed, and provides a thorough mixing of the materials within the completed surface width. Upon final blading, no disturbed rock shall protrude more than 2 inches above the adjacent surface unless otherwise provided in the contract. Remove material not meeting this dimension and place outside the roadbed; do not to obstruct drainage ways or structures. This material may be scattered off the roadbed if there is free drainage.

   e. Where DESIGNATED ON THE GROUND, included in C(T)5.31#, SHOWN ON THE DRAWINGS, or as ordered by the Contracting Officer, invasive species of concern prevention practices shall be followed as listed below.

Invasive Species of Concern Prevention Practices
Refer to Attachment B for invasive species of concern; prevention practices included in B6.35 and CT6.6# or as specified by the Forest Service.

3. Routine Blading

   a. Conform to the dimensions SHOWN ON THE DRAWINGS or designated in the SUPPLEMENTAL SPECIFICATIONS upon completion of blading.

   b. Shape roadbed width in excess of the dimensions shown only as needed to provide drainage away from the traveled way. Do not remove established grasses and other vegetation from the excess width except as incidental to providing drainage or unless otherwise provided in the contract.

4. Compaction

   Roads requiring compaction will be included in the C(T)5.31#. Unless Compaction Method B is designated in the C(T)5.31#, all traveled ways requiring compaction may be compacted by Method A. Compaction shall commence immediately following blading.

   Compaction Method A: Breaking track over full width of traveled way while operating equipment.

   Compaction Method B: 7-10 ton pneumatic, steel, or equivalent vibratory roller, operated to cover the full width two (2) times.

5. Undercutting

   Undercutting roadway back slope is not permitted.

6. Intersections

At intersections, blade the roadbeds of side roads which are not closed or restricted from vehicular use to ensure smooth transitions.

a. Signing, cross ditching in the road surface (traveled way), earth berms, or other devices placed to discourage or eliminate use by passenger cars, are field evidence of road closure or restriction. Roads listed for work under Sections T-835, T-836, T-838, or T-839 are considered restricted.

b. Side roads listed for work under this Section are not restricted.

7. Cleaning of Structures

Do not allow materials resulting from work under this Section to remain on or in structures, such as bridges, culverts, cattle guards, or drainage dips.

8. Berms

Maintain existing berms to the condition of adjacent segments. Do not create new berms.

9. Smooth Blading

Smooth blading may be used as an interim measure to remove loose surfacing material from the wheel paths. Store removed materials in a recoverable windrow until blade processing as described in this section is feasible. Watering will not be required for smooth blading. Accomplish smooth blading without distorting the existing cross-slope or crown of the traveled way.

Move and store loose surfacing materials on the high side of super-elevated curves and sections with uniform inslope or outslope. In crowned sections, store the material on either or both sides as elected. Windrow and place stored materials to provide not less than 12 feet of smooth traveled way on one-lane segments, or 20 feet of smooth traveled way on two-lane segments, or segments with turnouts. Place holes through windrows for drainage every 500 feet or less to provide drainage

T-812 - DUST ABATEMENT (06/2020)

812.01 Description

This work consists of applying dust palliatives on roads shown in the C(T)5.31# Road List.

812.02 Materials

The dust palliative materials are shown in C(T)5.31#, unless shown as Optional for Purchaser/Contractor's election. If Optional is shown the Purchaser/Contractor may use any of the products listed below. Dust palliative materials shall meet the following requirements:

1. Water (H2O): will be obtained from sources displayed on the SALE AREA MAP or listed in SPECIFICATION T-891 Water Supply, unless otherwise approved by the Contracting Officer.

2. Lignosulfonate: Provide certification that material meets the requirements of Subsection 725.02 of the "Standard Specifications for Construction of Roads and Bridges on Federal Highway Projects (FP-14)" and the Forest Service Supplemental Specification 725.02.

3. Magnesium Chloride (MgCl2): Provide certification that material meets the requirements of Subsection 725.02 of the "Standard Specifications for Construction of Roads and Bridges on Federal Highway Projects (FP-14)" and the Forest Service Supplemental Specification 725.02.

4. Calcium Chloride Liquid (CaCl2B): Provide certification that material meets the requirements of Subsection 725.02 of the "Standard Specifications for Construction of Roads and Bridges on Federal Highway Projects (FP-14) " and the Forest Service Supplemental Specification 725.02.

5. Calcium Chloride Mass (CaCl2F): Provide certification that material meets the requirements of Subsection 725.02 of the "Standard Specifications for Construction of Roads and Bridges on Federal Highway Projects (FP-14)" and the Forest Service Supplemental Specification 725.02.

6. Bituminous dust palliatives: Materials manufactured specifically for dust abatement purposes which conform to the requirements of Section T-892 for each listed road in C(T)5.31#.

812.03 Methods

As shown in the SUPPLEMENTAL SPECIFICATIONS, Purchaser/Contractor may utilize a variety of methods to decrease or eliminate the need for dust abatement.

812.04 Equipment

1. Design, equip, and operate application equipment for spreading dust palliatives so that the material is uniformly applied at the rate and traveled way widths shown in C(T)5.31#.

2. For bituminous palliatives, provide equipment that heats and applies the bituminous material. Provide a bituminous distributor that is self-powered and mounted on pneumatic tires and equipped with a pump and circulating spray bar, a tachometer, pressure gauges, accurate volume measuring devices such as visual volume dial or gauge calibrated to the tank, and a thermometer. Provide equipment which is a standard commercial type of proven performance.

3. Accomplish dilution of dust palliatives within the application vehicle with the water source protected from contamination. Circulate the resulting mixture at least five (5) minutes to ensure uniform mixing prior to application.

812.05 Maintenance Requirements

1. Limit water applications to abatement for hauling vehicles and provide at a frequency and rate which controls dust such that vehicle taillights and turn signals remain visible. Vary rates of application as needed but remain low enough to avoid forming rivulets. Accomplish the abatement by enough frequency of application without saturating and softening the traveled way. Compacted or glazed road surface or wheel tracks may be loosened as needed for water penetration.

2. Apply all other dust palliatives at the rates and times approved by the Contracting Officer. C(T)5.31# shows the expected average application rate and may be varied to meet field conditions. Lignosulfonate, Magnesium Chloride, and Calcium Chloride Brine are listed as gallons per square foot of the undiluted product at fifty (50), thirty-three (33), and thirty-eight (38) percent respectively. Calcium Chloride Mass is listed in pounds per square foot at seventy-seven (77) percent concentration.

T-812 - DUST ABATEMENT (06/2020)

3. Apply bituminous dust palliatives only when the surface to be treated contains enough moisture to obtain uniform distribution of the dust palliative unless noted differently in the SUPPLEMENTAL SPECIFICATIONS.

4. Prior to initial application, when needed, the road will be bladed and shaped under Section T-811-Blading.

5. Required subsequent applications may be applied to the existing road surface without blading.

6. Dust palliatives will not be applied in a manner that spatters or mars adjacent structures or trees or placed on or across cattleguards or bridges. Discharge dust abatement material only on roads approved by the Contracting Officer.

T-813 - SPOT SURFACING (06/2020)

813.01 Description

This work consists of placing surface aggregate as DESIGNATED ON THE GROUND, or as ordered by the Contracting Officer. It includes preparing the area, furnishing, hauling, and placing all necessary materials and other work necessary to blend with the adjacent road cross section.

813.02 Materials

1. Materials will be Government-furnished when stated in the SUPPLEMENTAL SPECIFICATIONS.

2. Materials furnished by the Purchaser/Contractor shall conform to the gradation and quality requirements of Section 703 of the "Standard Specifications for Construction of Roads and Bridges on Federal Highway Projects FP-14 U.S. Customary Units" and FS supplements to the FP-14.

3. All materials transported onto National Forest System land shall be free of invasive species of concern. Written documentation of methods used to determine the invasive species of concern free status of any and all materials furnished by the Purchaser/Contractor shall be submitted for approval to the Contracting Officer before transport of any materials onto NFS System land.

   The Contracting Officer shall have 5 days, excluding weekends and Federal holidays, to review the methods and inspect the materials after the required written documentation is provided by the Purchaser/Contractor. After satisfactory review and inspection or after 5 days without review and inspection, the Purchaser/Contractor may transport the material onto National Forest System land. Material receiving unsatisfactory review and inspection shall not be transported onto National Forest System land.

   Material or methods appropriate for establishing invasive species of concern free status for the invasive species of concern are listed below.

Invasive Species of Concern
Refer to Attachment B for invasive species of concern.
Appropriate Prevention Practices
Prevention practices included in B6.35 and CT6.6# or as specified by the Forest Service.

813.03 Maintenance Requirements

1. Thoroughly loosen the area to be surfaced to a minimum depth of 1 inch prior to placement of aggregate.

2. Mixing and Placing

   When scheduled coincidentally with work under Section T-811, and included in the SUPPLEMENTAL SPECIFICATIONS, mix surfacing and existing aggregate with water until a uniform mixture is obtained prior to final shaping and compaction.

   Otherwise, spread the material on the prepared area in layers no more than 4 inches in depth. When more than one (1) layer is required, shape and compact each layer before the succeeding layer is placed. Upon completion, the surfacing shall reasonably conform to the adjacent cross section and provide smooth transitions in the road profile.

3. Compaction Methods

   Compaction Method A: Breaking track while operating equipment on the traveled way.

   Compaction Method B: 7-10 ton pneumatic, steel, or equivalent vibratory roller, operated to cover the full width two (2) times.

   Either Method A or B may be used unless Method B is designated in C(T)5.31#.

T-815 – Paved Surface Cleaning (06/2020)

815.01 DESCRIPTION

This work consists of removing loose material from paved traveled way, including bridge decks, paved shoulders, and paved turnouts.

815.02 MAINTENANCE REQUIREMENTS

1. The surface shall be cleaned to the existing pavement width including bridge decks and paved shoulders and paved turnouts.

2. Materials shall be moved away from road centerline on double-lane roads.

3. Bridge deck cleaning shall require all materials to be moved longitudinally off the deck. If hauling of material is required it will be ordered under T-832.

815.03 EQUIPMENT

1. Equipment shall have the capability of removing all loose material from paved surfaces without damage to the surface. Surface damage includes but is not limited to:

   a. "Divots" in the paved surface;

   b. Peeling of surface material;

   c. Cracking or breaking of pavement edges.

2. Use of hydraulic flushing equipment will not be permitted within a horizontal distance of three hundred and fifty (350) feet from a live stream, unless approved by the Contracting Officer.

T-831 - DITCH MAINTENANCE (06/2020)

831.01 Description

This Section provides for routine maintenance of various types of ditches to provide drainage which is unobstructed, as shown on C(T) 5.31# or as Designated on the ground by the Contracting Officer.

831.02 Maintenance Requirements

1. Maintain ditches by removing rock, soil, wood, and other materials. Maintained ditches shall function to meet the intent of the original design.

2. Undercutting backslopes during ditch maintenance operations is not permitted.

3. Suitable material up to 4 inches in greatest dimension removed from the ditches may be blended into existing native road surface and shoulder or placed in designated berm.

4. Do not blend material from ditch cleaning operations into aggregate surfaced roads. Do not blade material across aggregate or bituminous surfaced roads, unless approved in writing by the Contracting Officer.

5. Remove excess materials temporarily stored on the ditch slope or edge of the shoulder daily. Haul excess material to designated waste area under Section T-832.

6. Remove limbs and wood chunks in excess of 12 inches in length or 3 inches in diameter from ditches and place outside the roadway.

7. Clean paved surfaces of all materials resulting from ditch maintenance work.

8. Shape lead-off ditches to drain away from the traveled way.

9. Invasive species of concern prevention practices shall be followed as listed below, and where:

   a. Designated on the Ground by the Contracting Officer,
   b. Included in C(T)5.31#,
   c. Shown on the Drawings, or
   d. As ordered by the Contracting officer.

Invasive Species of Concern Prevention Practices
Refer to Attachment B for invasive species of concern; prevention practices included in B6.35 and CT6.6# or as specified by the Forest Service.

T-832 - REMOVE AND ENDHAUL MATERIALS (06/2020)

832.01 Description

Work consists of loading, hauling, and placing of slide, slough, or excess materials such as rock, soil, vegetation, and other materials to designated disposal sites.

832.02 Maintenance Requirements

1. Remove, end haul, and dispose of excess materials generated by work under other Sections of this contract.

2. Remove the slide and slough materials to a height of approximately 6 feet vertically above the road surface, upslope from the roadbed, and not more than 3 feet vertically below the road surface down slope from the roadbed. Dispose of material at designated sites as shown on the SALE/CONTRACT AREA MAP, identified in SUPPLEMENTAL SPECIFICATIONS, or as ordered by the Contracting Officer.

3. Reshape the slope which generated the slide material as nearly as practical to its original condition by equipment operating from road surface. Reshaping of roadside ditches in slide area shall be in accordance with Section T-831.

4. When approved by the Contracting Officer, fill slumps by compacting selected materials into roadway depressions. Compaction is by Placement Method 2.

5. Place all materials in disposal sites as specified in the SUPPLEMENTAL SPECIFICATIONS, as shown on the SALE/CONTRACT AREA MAP, or as ordered by the Contracting Officer.

   a. Placement Method 1 - Side Casting and End Dumping: Material may be placed by side casting and end dumping. Where materials include large rocks, provide a solid fill by working smaller pieces and fines into voids. Shape the finished surfaces to drain.

   b. Placement Method 2 - Layer Placement: Step or roughen surfaces on which materials are to be placed prior to placing any material. Place materials in approximately horizontal layers no more than 12 inches thick. Compact each layer by operating hauling and spreading equipment over the full width of each layer.

6. Repair any damage to existing aggregate or pavement surfaces.

T-834 - DRAINAGE STRUCTURE MAINTENANCE (06/2020)

834.01 Description

This work consists of cleaning and reconditioning culverts and other drainage structures.

834.02 Maintenance Requirements

1. Clean drainage structures, inlet structures, culverts, catch basins, and outlet channels specified in the SUPPLEMENTAL SPECIFICATIONS. Clean catch basins by removing the material within the area SHOWN ON THE DRAWINGS.

2. Clean the transition from the ditch line to the catch basin 10 feet or more from the catch basin. Clean outlet channels and lead-off ditches 6 feet or more. Remove and place debris and vegetation to not enter the channel or ditch, or obstruct traffic or haul debris and vegetation to a designated disposal area in accordance with Section T-832 when shown on the SALE/CONTRACT ARE MAP, when specified in the SUPPLEMENTAL SPECIFICATIONS, or as ordered by the Contracting Officer,

3. Hydraulic flushing of drainage structures is not allowed unless provided for in the SUPPLEMENTAL SPECIFICATIONS.

4. Cleaning and reconditioning are limited to the first 3 feet of inlet and outlet, determined along the top of the structure. Recondition culvert inlet and outlet by field methods such as jacking out or cutting away damaged metal which obstructs flow. Treat cut edges with a zinc rich coating, in accordance with AASHTO M 36M and ASTM A 849.

5. Where DESIGNATED ON THE GROUND, included in C(T)5.31#, shown on the SALE/CONTRACT AREA MAP, or as ordered by the Contracting Officer, invasive species of concern prevention practices shall be followed as listed below.

Invasive Species of Concern Prevention Practices
Refer to Attachment B for invasive species of concern; prevention practices included in B6.35 and CT6.6# or as specified by the Forest Service.

T-835 - ROADWAY DRAINAGE MAINTENANCE (06/2020)

835.01 Description

This work consists of providing post-haul drainage on roads.

835.02 Maintenance Requirements

1. Drainage

   a. Upon completion of work, shape the roadway to provide for the removal of surface water. The roadway need not be passable to vehicles. Repair and reinstall water bars, barriers or berms existing prior to the Purchaser/Contractor's operation. Areas where water is ponded by existing centerline profile sags in through cuts may be left untreated.

   b. Continuous blade shaping of the roadbed is not required under this specification.

   c. Work to be done at staked locations shall be as indicated on the stake and/or stated in SUPPLEMENTAL SPECIFICATIONS:

   d. Any of the following methods are acceptable for use at eroded or rutted locations:

      Method A: Outsloping the roadbed at not less than ½ inch per foot of width.

      Method B: Insloping the roadbed at not less than ½ inch per foot of width.

      Method C: Water bar roadbed at locations staked on the ground and construct as SHOWN ON THE DRAWINGS or as included in SUPPLEMENTAL SPECIFICATIONS.

   e. Drainage structures located in through-fills and natural watercourses shall be fully functional without obstructions, including inlet and outlet channel within 20 feet of the structure.

   f. Either clean culverts and other fabricated structures to provide drainage from road ditches and make the ditch functional or provide water bar(s) across the roadbed. Removed structures shall become Purchaser/Contractor's property to be removed from NFS land. Remove and replace any Purchaser/Contractor-installed temporary drainage structures with a water bar.

2. Slides, Slumps and Slough

   a. Slides and slough may be left in place, provided they do not potentially impound water or divert water from watercourses. Reshape the various surfaces to provide drainage.

   b. Provide drainage to effectively decrease or eliminate the entry of surface water into slides, slumps, and roadbed surface cracks. Place berms, waterbars or ditches as needed to intercept and remove runoff water from the roadbed. Surface seal cracks by covering over with native soil materials to prevent additional water entry and compact with equipment tires.

3. Entrance Devices

   Upon completion of work, replace entrance devices to effectively eliminate access by motorized vehicles having four (4) wheels and a width in excess of 50 inches or by all motorized wheeled vehicles, as directed by the Contracting Officer.

4. Seeding

   Seed and fertilize all disturbed areas in accordance with requirements in Section T-841.

T-836 - MAINTENANCE FOR LIMITED USE (06/2020)

836.01 Description

This work consists of making limited use roads passable for joint use by Purchaser/Contractor and high clearance vehicles while providing drainage from the traveled way and roadbed.

836.02 Maintenance Requirements

1. Traveled Way

   Purchaser/Contractor may smooth or fill existing cross ditches and water bars and, as approved by the Contracting Officer, modify existing road junctions to enable vehicle access. Prior to beginning haul and resumption of haul after an extended stoppage:

   a. Remove brush, fallen trees, rocks, and other debris from traveled way, including turnouts, turnarounds, and other locations that interfere with needed maintenance as follows:

      i. No object extending over 4 inches above the road surface shall remain within the 12 feet usable traveled way and 10 feet turnout widths. Center the usable width on the roadbed or position away from the fill slope.

      ii. Cut and remove standing or down trees, logs, brush, and limbs from the traveled way, including turnouts and turnarounds. Remove encroaching limbs to a height of 14 feet above the traveled way surface. Scatter material not meeting utilization standards outside and below the roadbed on the fill side. Limb and remove timber meeting utilization standards or deck at agreed locations.

      iii. Place all removed materials away from drainages.

      iv. During use, maintain drainage structures, including dips, ditches and culverts, in a useable condition.

   b. Clean and recondition drainage facilities in accordance with Section T-831 and T-834.

2. Slough and Slides

   a. Slough and slides may be left in place, provided surface drainage is provided and at least 12 feet of width is available for vehicle passage.

   b. Purchaser/Contractor may reposition or ramp over slides and slough when the traveled way width is less than 12 feet, providing the material is capable of supporting vehicles. Limit outslope to no more than six percent.

   c. Reposition slough or slide materials on the roadbed which are not capable of supporting a vehicle to provide the 12-foot width. When directed by the Contracting Officer, slough or slide material shall be removed under Section T-832.

3. Slumps and Washouts

   a. Drain the roadbed immediately upgrade of slumps and longitudinal cracks to prevent water from entering slump area.

   b. Slumps and longitudinal cracks at the edge of the roadbed shall not be considered a part of the usable width. Usable width may be reduced to 10 feet in the area of the slump.

   c. Unless the Contractor Officer agrees to material being placed on slumps, ramp the slumps on both ends into undisturbed roadbed to provide at least 10 feet usable width. Use removed materials to guide vehicles to the ramp location or to aid in draining the area.

   d. Washouts may be filled with suitable material.

4. Post haul

   At the end of hauling or prior to entering seasonal shutdowns or a period of extended inactivity:

a. Shape the traveled way and disturbed roadbed to provide functional drainage.

T-836 - MAINTENANCE FOR LIMITED USE (06/2020)

b. Reinstall removed cross ditches and water bars and provide any additional drainage structures necessary to offset changes caused through use and maintenance.

c. Leave roads useable for high clearance vehicles. Remove or reshape Purchaser/Contractor modifications at road junctions to leave the entrance as it was before use, or as agreed at the time of improvement.

T-838 - MAINTENANCE FOR HIGH CLEARANCE VEHICLE USE (06/2020)

838.01 Description

This work consists of making limited use roads passable for project use by Purchaser/Contractor and providing drainage from the traveled way and roadbed.

838.02 Maintenance Requirements

1. Traveled Way

   Purchaser/Contractor may smooth or fill existing cross ditches and water bars and, as approved by the Forest Service, modify existing road junctions to enable vehicle access. Prior to beginning haul and resumption of haul after an extended stoppage:

   a. Remove rocks, standing or down trees, and other debris from the 12-foot traveled way. No object extending over 4 inches above the road surface shall remain within the 12 feet usable traveled way. Center the usable width on the roadbed or position away from the fill slope.

   b. Place all removed materials away from drainages.

   c. During use, maintain drainage structures including dips, ditches and culverts in a usable condition.

   d. Clean and recondition drainage facilities in accordance with Section T-831 and T-834.

   The Purchaser/Contractor may perform the following work prior to beginning haul and resumption of haul after an extended stoppage:

   a. Remove rocks, standing or down trees, logs, brush, limbs and other debris from turnouts, turnarounds, or other locations that interfere with maintenance.

   b. Remove encroaching limbs to a height of 14 feet above the traveled way surface.

   c. Scatter material not meeting utilization standards outside and below the roadbed on the fill side. Limb and remove timber that meets utilization standards or deck at locations approved by the Forest Service.

2. Slough and Slides

   a. Slough and slides may be left in place when surface drainage is provided and at least 12 feet of width is available for vehicle passage.

   b. Purchaser/Contractor may reposition or ramp over slides and slough when the traveled way width is less than 12 feet providing the material is capable of supporting vehicles. Limit outslope to no more than six percent.

   c. Reposition slough or slide materials, which are not capable of supporting a vehicle, on the roadbed to provide the 12 feet width. When directed by the Forest Service, slough or slide material will be removed under Section T-832.

3. Slumps and Washouts

   a. Drain the roadbed immediately upgrade of slumps and longitudinal cracks to prevent water from entering slump area.

   b. Slumps and longitudinal cracks at the edge of the roadbed shall not be considered a part of the usable width. Usable width may be reduced to 10 feet in the area of the slump.

   c. Unless the Forest Service approves material being placed on slumps, ramp the slumps on both ends into undisturbed roadbed to provide at least 10 feet usable width. Use removed materials to guide vehicles to the ramp location or to aid in draining the area.

   d. Washouts may be filled with suitable material.

4. Post -haul

   At the end of hauling or prior to seasonal shutdowns or a period of extended inactivity:

   a. Shape the traveled way and disturbed roadbed to provide functional drainage.

   b. Reinstall removed cross ditches and water bars and provide any additional drainage structures necessary to offset changes caused through use and maintenance.

   c. Leave roads useable for high clearance vehicles. Remove or reshape Purchaser/Contractor modifications at road junctions to leave the entrance as it was before use, or as agreed at the time of improvement.

T-839 - MAINTENANCE FOR PROJECT USE (06/2020)

839.01 Description

Work consists of providing minimum access required for Purchaser/Contractor's operations and associated Forest Service contract administration while preventing unacceptable resource or road damage.

839.02 Maintenance Requirements

1. Purchaser/Contractor is authorized to perform the following maintenance to provide vehicle passage and drainage:

    a. Removing log, earth, and rock barriers and/or improving existing road junctions to enable vehicle access as mutually agreed.

    b. Smoothing or filling existing cross ditches and water bars.

    c. Installing Purchaser/Contractor-furnished culverts or other temporary drainage structures for shallow stream crossings, as approved by the Contracting Officer.

    d. Removing brush, fallen trees, rocks, and other materials from the traveled way and other locations that interfere with needed maintenance:

        i. Place all removed materials away from drainages.

        ii. Limb and remove timber which meets utilization standards or deck at locations approved by the Contracting Officer. Scatter other woody materials, including limbs, off and below the roadbed without creating concentrations.

    e. Clean and recondition drainage structures in accordance with Section T-831 and Section T-834.

    f. Reposition or ramp over slough and slides to provide adequate width of traveled way material.

    g. Provide traveled way drainage above slumps and seal cracks in slump area. Ramp the slumps on both ends into undisturbed roadbed to provide usable width unless otherwise ordered by the Contracting Officer.

2. During use, the traveled way shall not channel water along the road. Prior to periods of anticipated rains and runoff, perform the following work:

    a. Shape the traveled way and roadbed to drain.

    b. Reinstall removed cross ditches and water bars and provide any additional drainage structures necessary to offset changes through use and maintenance.

    c. Perform work outlined in 839.02 1 (e), (f), and (g).

    d. During periods of non-use, replace original barrier or provide and maintain standard MUTCD Type 3 barricades unless alternate barriers are approved by the Contracting Officer.

839.03 Post Haul Requirements

1. Upon completion of project use, perform work described in the requirements of 839.02 2 and in accordance with 839.03 2 and 3 or as otherwise provided for in the SUPPLEMENTAL SPECIFICATIONS or C(T)5.31#.

2. Roads designated in C(T)5.31# to be blocked shall conform to the requirements of Section T-835. Unless otherwise approved by the Contracting Officer, remove Purchaser/Contractor-installed temporary structures from National Forest System land. Associated commercially obtained materials shall remain the property of the Purchaser/Contractor.

3. Remove or reshape Purchaser/Contractor improvements at road junctions, as approved by the Contracting Officer at the time of improvement.

T-841 – VEGETATION ESTABLISHMENT (06/2020)

841.01 Description

This work consists of applying seed, fertilizer, mulch, and planting containerized or bare root plant stock singularly or in specified combinations to roadways and disposal areas. Work area may be limited to designated portions of the roadway and roadside or include treatment of the entire area bounded by the outer limits of the roadsides.

841.02 Materials and Application Rates

Provide the following listed materials:

1. Fertilizer: Fertilizer shall be a standard commercial grade and provide the following minimum percentage of available nutrients designated:

% Nitrogen	% Phosphorous	% Potassium	% Sulfur

Furnish fertilizer in sealed containers with the composition, weight, and guaranteed analysis of contents clearly marked. Apply at the rate of_____pounds per acre.

2. Seed: This work consists of furnishing and placing required seed mix on all areas disturbed under this contract and on any other areas specified.

   a. Apply the seed in the following amounts and mixtures:

Species	Application Rate Pounds per Acre

   b. Use hand-operated seeding devices, or other devices approved by the Contracting Officer, to apply seed.

   c. Furnish weed-free seed, with additional requirement that no seed containing any prohibited noxious weed seed, or any restricted noxious weed seed in excess of current state standards. Weeds are defined in the current publication commonly referred to as the "All States Noxious Weed List" while the standards for prohibited and restricted noxious weeds are to be found in the appropriate state law or regulations.

      Furnish seed separately or in mixture in standard containers with:

      i. Seed name
      ii. Lot number
      iii. Net weight
      iv. Percentages of purity and of germination. In case of legumes, percentage of germination to include hard seed.
      v. Percentage of maximum weed seed content clearly marked for each kind of seed
      vi. Certification that the seed lot meets applicable State and Federal laws regarding prohibited and restricted noxious weeds clearly marked for each kind of seed.

   d. Furnish the Contracting Officer duplicate signed copies of a certification signed by a Registered Seed Technologist or Seed Analyst certified through either the Association of Official Seed Analysts or the Society of Commercial Seed Technologists. Certification shall state that each lot of seed has been tested in accordance with the Association of Official Seed Analysts standards within 12 months prior to the date of application. This certification shall include:

      i. name and address of laboratory
      ii. date of test
      iii. lot number for each kind of seed
      iv. name of seed
      v. percentage of germination
      vi. percentage of purity
      vii. percentage of weed content
      viii. certification that the seed lot meets applicable State and Federal laws regarding prohibited and restricted noxious weeds
      ix. in the case of a mixture, the proportions of each kind of seed.

Legume seed shall be inoculated with approved cultures in accordance with the instructions of the manufacturer. No seed may be applied without prior written approval from the Contracting Officer.

3. Mulch: Apply mulch materials as follows:

Mulch Type	Application Rate Pounds per Acre

4. Plant Stock: Furnish the following listed plant materials:

Stock	Size	Bare Root	Containerized

841.03 Schedules and Applications

1. Schedule

   a. Seeding may not be done until all other ground-disturbing work on the road has been completed and accepted. Complete seeding as soon as other ground-disturbing work is accepted, unless a specific seeding season is listed below.

   Seeding season 1: _____ to_____ , inclusive. Seeding

   Season 2: to , inclusive.

   b. Do not apply the treatment when the ground is frozen or excessively wet. Terminate application during periods when there is too much wind to allow consistent treatment rates and control of the treatment area to the designated limits.

2. Roadside and Slope Treatment

   a. Roadsides will not require advance preparation unless required in the SUPPLEMENTAL SPECIFICATIONS.

   b. Apply the designated treatment by hand-operated machine. When both roadbed (under 841.03C) and slopes are shown in the SUPPLEMENTAL SPECIFICATIONS for treatment, application may be done at the same time.

   c. The Contractor will not be required to operate self-propelled equipment beyond the defined roadbed. Do not apply treatment materials to the foreslope of ditches unless roadbed treatment (841.03C) is also required.

3. Roadbed Treatment

   a. Scarify portions of the roadbed not previously disturbed and left loose under Section T-835 to a minimum depth of 4 inches, unless bedrock is encountered at a lesser depth. The maximum distance between furrows formed by scarification is 12 inches.

   b. Treat barrier mounds placed under Section T-835 while in a roughened condition.

4. Planting

   a. Plant designated woody plant materials at the staked locations or designated spacings.

   b. Place containerized plant stock in an appropriately sized hole formed by a dibble or other device to place the roots at the proper depth.

   c. Place bare root plant stock in a slotted cut formed by a dibble, mattock, Pulaski, or other edged tool. Place the crown at ground level. Do not bend or break the roots.

   d. Compress the area adjacent to the hole by foot or special tool to form a depression up and down slope from the stem and force the soil against the container or roots with no air voids.

   e. Hold the plantings firmly in place by the soil. When checked by pulling upward on the top ½ inch of the plant stem, the planting shall either break at the hold point or the area compressed against the roots show evidence of movement. Remove and replace with fresh stock plantings that are not held firmly by the soil.

T-841 – VEGETATION ESTABLISHMENT (06/2020)

841.04 Government Provided Materials

The Government will provide the following listed materials. At least ten (10) calendar days' notice must be given to the Contracting Officer prior to actual date material will be picked up.

Materials will be provided at:

Material	Location

T-842 - CUTTING ROADWAY VEGETATION (06/2020)

842.01 Description

This work consists of cutting all vegetative growth on roadway surfaces and roadsides, including trees and other vegetation less than 4 inches in diameter measured 6 inches above the ground.

842.02 Maintenance Requirements

1. General

   a. Cut brush, trees, and other vegetation within each area treated to a maximum height of 6 inches above the ground surface or obstruction such as rocks or existing stumps. When work is performed under this Section, remove all limbs which extend into the treated area, or over the roadbed, to a height of 14 feet above the traveled way surface elevation.

   b. Items to remain will be DESIGNATED ON THE GROUND.

   c. Work may be performed either by hand or mechanically unless specifically shown in C(T)5.31#. Self-propelled equipment is not allowed on cut and fill slopes or in ditches.

   d. Correct damage to boles of standing trees caused by Purchaser/Contractor's operation either by treatment with a commercial nursery sealer or by removing the tree as directed by the Contracting Officer.

   e. Limb trees within the cutting limits which are over 4 inches in lieu of cutting, measured at 6 inches above the ground.

   f. When trees are limbed, cut limbs within 4 inches of the bole.

2. Cutting Side Vegetation

   a. Show the width of vegetation to be removed in (C(T)5.31#.

   b. Unless otherwise included in the SUPPLEMENTAL SPECIFICATIONS or DESIGNATED ON THE GROUND:

      i. Commence work at the edge of the traveled way and proceed away from the road centerline.

      ii. Roads without a defined traveled way: The starting point for cutting will be marked on the ground or defined in the SUPPLEMENTAL SPECIFICATIONS.

   c. The points for establishing cutting limits are as follows:

      i. Fill and daylighted (wide roadbed) section cutting commences at the edge of the traveled way and proceeds away from the road center line.

      ii. Drainage ditched section cutting commences at the bottom of the existing ditch and proceeds away from the road center line. Cutting on ditch foreslopes is not required.

      iii. Unditched section cutting commences at the intersection of the cutbank and the roadbed and proceeds away from center line.

   d. Provide transitions between differing increments of cutting width. Accomplish transitions in a taper length of not less than 50 feet nor more than 70 feet.

3. Debris

   a. Materials resulting from the cutting operation in excess of 12 inches in length or 3 inches in diameter is not allowed to remain on roadway slopes within the treated area, in ditches, or within water courses.

   b. Remove limbs and chunks in excess of 3 inches in any dimension from the traveled way and shoulders.

   c. Materials may be scattered down slope from the roadbed, outside of the work area and drainages unless otherwise listed in D. Invasive Species of Concern.

4. Invasive Species of Concern

   Where DESIGNATED ON THE GROUND, included in C(T)5.31#, shown on SALE/CONTRACT AREA MAP or as ordered by the Contracting Officer invasive species of concern prevention practices shall be followed as listed below.

Invasive Species of Concern Prevention Practices
Refer to Attachment B for invasive species of concern; prevention practices included in B6.35 and CT6.6# or as specified by the Forest Service.

T-851 - LOGGING OUT (06/2020)

851.01 Description

This work consists of removal of fallen trees and snags which encroach within 3 feet of the roadbed on both sides.

851.02 Maintenance Requirements

1. Limb and remove timber which meets Utilization Standards in A(T)2 or deck at locations designated by the Contracting Officer.

2. Limb non-merchantable material and cut into lengths for handling. Deck outside ditches and drainages, off the traveled way and turnouts or at staked locations. The clearing width is to the edge of the roadbed for public use roads, except limited use roads. The clearing width for limited use roads is shown in T-836, T-838, or T-839, as applicable.

3. Notwithstanding B(T)2.3, blowdown timber outside Sale/Contract Area required to be removed, which meets Utilization Standards in A(T)2, when designated by the Contracting Officer is Included Timber subject to requirements of B(T)2.2.

4. Do not leave woody debris and slash in excess of 12 inches in length or 3 inches in diameter, or concentrations which may plug ditches or culverts, in ditches, drainage channels, or on backslopes, traveled way, shoulders, or turnouts.

T-854 TREATMENT AND DISPOSAL OF DANGER TREES (06/2020)

854.01 Description

This work consists of felling and disposal of live or dead danger trees sufficiently tall to reach roads used by the Purchaser/Contractor. Any removal of logs is subject to prior agreement between the Contractor Officer and the Purchaser/Contractor.

854.02 Requirements

1. Designation of danger trees.

   a. Danger trees to be felled will be documented in advance by the Contracting Officer. Trees authorized to be removed will be Marked for removal.

2. Falling, bucking and treatment for disposal.

   a. Use controlled felling to ensure the direction of fall and prevent damage to property, structures, roadway, residual trees, and traffic. Stump heights measured on the side adjacent to the highest ground shall meet requirements of A(T)6. Higher stump heights are permitted when necessary for safety.

   b. Felled snags and trees, which are not Marked for removal, will be left in a stable condition such that they will not roll or slide. Position logs away from standing trees so they will not roll, are not on top of one another, and are located out of roadway and drainage structures.

   c. Fell, limb and remove trees which are Marked for removal and are equal or exceed the utilization standards as listed in A(T)2 or SUPPLEMENTATAL SPECIFICATIONS. Dispose of merchantable timber designated for removal in accordance with B(T)2.32 Construction Clearing or as described in SUPPLEMENTAL SPECIFICATIONS.

3. Slash treatment.

   a. Within the roadway, remove limbs, chunks, and debris in excess of 12 inches in length and 3 inches in diameter, and concentrations that may plug ditches or culverts, and water courses.

   b. Dispose of slash by scattering outside the roadway limits without damaging trees, or improvements.

   c. Haul large accumulations of slash in accordance with T-832.

T-891 - WATER SUPPLY AND WATERING (06/2020)

891.01 Description

This work consists of providing facilities to furnish an adequate water supply, hauling, and applying water.

891.02 Materials

1. If the Purchaser/Contractor elects to provide water from other than designated sources, the Purchaser/Contractor is responsible to obtain the right to use the water, including any cost for royalties involved.

   a. Suitable and adequate water sources available for Purchaser/Contractor's use under this contract are designated as follows:

Map Key No.	Location - Road	Location - Milepost	Use Restrictions

No water will be withdrawn from any occupied Listed Fish Habitat LFH stream as shown on the Contract Area Map including East Fork Hood River and Dog River, except in an emergency (e.g. wildfire) situation. Limit water withdrawals for road maintenance or other purposes in unoccupied LFH Polallie Creek and within 1,500 feet of occupied or unoccupied LFH to 10 percent or less of stream flow at the point of withdrawal (visually estimated). In non - LFH streams greater than 1,500 feet from LFH limit withdrawal by 50 percent or less of the stream flow (visually estimated). Regardless of water withdrawal location, use of screen material with either of the following maximum openings is required: 1.75 mm opening for woven wire or 3/32 inch opening for perforated plate.

891.03 Equipment

1. Positive control of water application is required. Equipment shall provide uniform application of water without ponding or washing.

2. An air gap or positive anti-siphon device shall be provided between the water source and the vehicle being loaded if the vehicle has been used for other than water haul, if the source is a domestic potable water supply, or the water is used for tank-mixing with any other materials.

3. The designated water sources may require some work prior to their use. Such work may include cleaning ponded areas, installing temporary weirs or sandbags, pipe repair, pump installation, or other items appropriate to the Purchaser/Contractors's operations. Flowing streams may be temporarily sandbagged or a weir placed to pond water, provided a minimum flow of___ cu. ft/sec is maintained. Obtain approval from the Contracting Officer on improvements for sandbags or weirs prior to placement.

4. Juvenile fish protection. The Purchaser/Contractor shall utilize (1) one of the following methods of screening on any draft hoses used unless otherwise approved by Contracting Officer.

   a. Perforated Plate: Screen openings shall not exceed 3/32 or 0.0938-inches (2.38mm).

   b. Profile Bar Screen: The narrowest dimension in the screen openings shall not exceed 0.0689-inches (1.75-mm).

   c. Woven Wire Screen: Screen openings shall not exceed 3/32 or 0.0938-inches (2.38 mm).

   d. All screening methods shall be cleaned frequently either with wire brushing, flushing, or any other acceptable method.

T-892 - BITUMINOUS PRODUCTS (06/2020)

892.01 Description

This work consists of furnishing bituminous material to be used for dust abatement performed in accordance with T-812 - Dust Abatement.

892.02 Materials

1. For cutback asphalts and emulsified asphalts, meet the requirements and application temperatures of Section 702 of the "Standard Specifications for Construction of Roads and Bridges on Federal Highway Projects (FP-14)".

2. Meet the bituminous dust palliatives requirements listed in Table T-892-2 or listed in the SUPPLEMENTAL SPECIFICATIONS.

892.03 Certificate of Compliance

1. Provide a Certificate of Compliance in the following format:

Consignee: _____ Designation: _____
Contract Number: _____ Date: _____
Vehicle Identification: _____
Type and Grade: _____ With Additive(%, Brand): _____
Loading Temperature: _____ Net Weight: _____
Net Liters: _____

The shipment of bituminous material identified above and covered by the bill of lading complies with Government Standard Specification as modified by SUPPLEMENTAL SPECIFICATIONS applicable to this project.

Producer: _____

Signed: _____
Purchaser/Contractor Representative

892.04 Application Temperatures

1. Apply bituminous materials within the temperature ranges indicated in Table T-892-2.

TABLE T-892-1 - Application Temperatures

Application Temperature Range (Degrees C)		
Type & Grade of Material	Spray Min./Max.	Mix Min./Max.
MC 30	21-63	16-40
MC 70	40-85	32-68
DO-1-2-3	27-52	
DO-4	27-80	
DO-6-7-8	10-60	

TABLE 892-2.- Bituminous Dust Palliatives

General Requirements	ASTM Method	DO-1	DO-2	DO-3	DO-4	DO-6	DO-6P	DO-8
Flash Point								
Tag Open-Cup, □C, Min.	D 1310	52	52	52	93	66	66	
Cleveland Open-Cup, □C, Min.	D 92							100
Viscosity:								
Kinematic, @ 38 □C, cSt	D 2170	40-70	90-125	135-200	20-100			
Saybolt Furol, @ 25 □ C SFS Max.	D 88					75-150	25-50	50
Water, % Max.	D 95	0.	0.5	0.5	0.			
Asphaltenes, %s	D 2006-70	3-6	4-8	5-10	0-5	5-15	5-15	5-10
Saturates. % Min.	D 2006-70	25	25	25	10	25	25	8
24-Hour Settlement, %	D 244					2.0	2.0	2.0
Sieve Test, % Max.	D 244							0.1
Distillation Tests								
Total Distillate to 288 □C, Max.% by Volume	D 244	35	30	30	5			50
Total Distillate to 360 □C, Max.% by Volume	D 402							
Oil Distillate, % by Volume	D 244						10-20	5
Total Residue, % by Weight	D 244					60	55	45
Test on Residue from Distillate								
Viscosity, Kenmatic, @ 38 □C ,cST	D 2170	75-250	200-600	500-1500	20-150			
Viscosity, Kenmatic, @ 50 □C, cST	D 2170					200-600	150-450	250-1200
Solubility in Trichloroethylene, % Min.	D 2042	98	98	98	98	96	96	98
Ductility, CM Min.	D 113							

Invasive Species of Concern on the Mt. Hood National Forest (MHNF)

Common name	Scientific name	Priority for MHNF
black locust	*Robinia pseudoacacia*	
Bohemian knotweed	*Polygonum* × *bohemicum*(synonym *Polygonum cuspidatum x sachalinense*)	Yes
brownray knapweed	*Centaurea jacea*	Yes
bull thistle	*Cirsium vulgare*	Yes
yellow toadflax (butter and eggs)	*Linaria vulgaris*	Yes- east side
Canada thistle	*Cirsium arvense*	Yes
cheatgrass	*Bromus tectorum*	Yes- east side
common dandelion	*Taraxacum officinale*	
common hawkweed	*Hieracium lachenalii*	Yes
common plantain	*Plantago major*	
false brome	*Brachypodium sylvaticum*	
Dalmatian toadflax	*Linaria dalmatica*	Yes- east side
diffuse knapweed	*Centaurea diffusa*	Yes
English holly	*Ilex aquifolium*	Yes- west side
English ivy	*Hedera helix*	Yes- west side
English laurel	*Prunus laurocerasus*	
English plantain	*Plantago lanceolata*	
field bindweed	*Convolvulus arvensis*	
hairy cat's-ear	*Hypochaeris radicata*	
herb Robert	*Geranium robertianum*	Yes- west side
Himalayan blackberry	*Rubus armeniacus*	Yes- west side
Houndstongue (gypsyflower)	*Cynoglossum officinale*	Yes- east side
Japanese sweet coltsfoot (Japanese butterbur)	*Petasites japonicus*	Yes- west side
Japanese/Bohemian knotweed	*Fallopia x bohemica*	Yes
meadow knapweed (Tyrol knapweed)	*Centaurea nigrescens*	Yes
medusahead	*Taeniatherum caput-medusae*	Yes- east side
North African wiregrass	*Ventenata dubia*	Yes- east side
orange hawkweed	*Hieracium aurantiacum*	Yes
ornamental jewelweed (policeman's-helmet)	*Impatiens glandulifera*	Yes- west side
Queen Anne's lace	*Daucus carota*	Yes
reed canarygrass	*Phalaris arundinacea*	Yes
rush skeletonweed	*Chondrilla juncea*	Yes
Scotch broom	*Cytisus scoparius*	Yes
shiny leaf geranium, shiny geranium	*Geranium lucidum*	Yes- west side
spotted knapweed	*Centaurea stoebe*	Yes
St. John's-wort	*Hypericum perforatum*	Yes
sulphur cinquefoil	*Potentilla recta*	Yes
tansy ragwort	*Senecio jacobaea*	Yes- west side
whitetop	*Cardaria draba*	Yes- east side
yellow star-thistle	*Centaurea solstitialis*	Yes- east side

RECONSTRUCTION COSTS

Road Reconstruction Total Estimated Costs

Project Number	Estimated Costs
4400 000	$14,595.47
4400 620	$22,576.98
Total:	$37,172.45
	$11,281.00 **<- C5.213# Deposits for Reconstruction Engineering Services (DRES)**
TOTAL RECONSTRUCTION =	**$ 48,453.45**

SCHEDULE OF ITEMS					
NFSR #4400000					
MP 0.00 - 3.67					
PAY ITEM	**DESCRIPTION**	**QUANTITIES**	**UNIT**	**UNIT $**	**TOTAL $**
15101	MOBILIZATION	ALL	LUMP SUM	$1,326.86	$1,326.86
20207A	REMOVAL OF INDIVIDUAL TREES, DISPOSAL METHOD - (f)	8	EACH	$96.41	$771.28
20302	REMOVAL OF CULVERT PIPE, DISPOSAL METHOD (a), COMPACTION METHOD (n/a)	1	EACH	$161.80	$161.80
20304	REMOVAL OF EXISTING ASPHALT, DISPOSAL METHOD (a)	88.0	SQUARE YARD*	$12.46	$1,096.48
20424A	DRAINAGE EXCAVATION, TYPE OUTLET DITCH	50	FOOT	$3.74	$187.00
25104	KEYED RIPRAP, CLASS 3	4	CUBIC YARD*	$76.71	$306.84
30101	AGGREGATE BASE, GRADING B	20	CUBIC YARD*	$53.13	$1,062.60
40304	ASPHALT CONCRETE, STATE OF OREGON, TYPE II	20.00	TON	$164.59	$3,291.80
60201C	24 INCH PIPE CULVERT, ALUMINIZED STEEL, GAGE 16, 0.064-INCH THICKNESS, COMPACTION METHOD (a1)	82	FOOT	$71.10	$5,830.20
62552	SEEDING AND MULCHING, DRY METHOD	ALL	LUMP SUM	$560.61	$560.61
*DENOTES CONTRACT QUANTITY				**TOTAL**	**$14,595.47**

SCHEDULE OF ITEMS					
NFSR #4400 620					
MP 0.00 - 0.52					
PAY ITEM	**DESCRIPTION**	**QUANTITIES**	**UNIT**	**UNIT $**	**TOTAL $**
15101	MOBILIZATION	ALL	LUMP SUM	$2,052.45	$2,052.45
20103	CLEARING AND GRUBBING, DISPOSAL METHOD - TOPS AND LIMBS (f), LOGS (i), STUMPS (f)	0.52	MILE	$3,415.62	$1,776.12
20207A	REMOVAL OF INDIVIDUAL TREES, DISPOSAL METHOD - (f)	4	EACH	$96.41	$385.64
20207B	REMOVAL OF INDIVIDUAL TREES, DISPOSAL METHOD - TOPS AND LIMBS (f), LOGS (i), STUMPS (f)	1	EACH	$72.31	$72.31
20302	REMOVAL OF CULVERT PIPE, DISPOSAL METHOD (a), COMPACTION METHOD (n/a)	3	EACH	$161.80	$485.40
20424A	DRAINAGE EXCAVATION, TYPE OUTLET DITCH	70	FOOT	$4.34	$303.80
20425C	DRAINAGE EXCAVATION, TYPE CULVERT CATCH BASIN	1	EACH	$63.83	$63.83
25104	KEYED RIIPRAP, CLASS 3	3	CUBIC YARD*	$76.83	$230.49
30115	AGGREGATE SURFACE COURSE, GRADING D	195	CUBIC YARD*	$55.27	$10,777.65
30315	ROADWAY RECONDITIONING, COMPACTION METHOD (a1)	0.52	MILE	$2,727.54	$1,418.32
60201A	18 INCH PIPE CULVERT, ALUMINIZED STEEL, GAGE 0.064-INCH THICKNESS, COMPACTION METHOD (a1)	35	FOOT	$50.32	$1,761.20
60201B	18 INCH PIPE CULVERT, ALUMINIZED STEEL SQUASH PIPE, GAGE 0.064-INCH THICKNESS, COMPACTION METHOD (a1)	46	FOOT	$58.46	$2,689.16
62552	SEEDING AND MULCHING, DRY METHOD	ALL	LUMP SUM	$560.61	$560.61
***DENOTES CONTRACT QUANTITY**				**TOTAL**	**$22,576.98**

United States Department of Agriculture
Forest Service

OREGON
HOOD RIVER COUNTY
REGION SIX
MT. HOOD NATIONAL FOREST
HOOD RIVER RANGER DISTRICT

SPECIFIED ROADS			
ROAD NUMBER	**ROAD NAME**	**LENGTH**	**TYPE OF WORK**
4400000	DUFUR MILL	3.67	RECONSTRUCTION
4400620	---	0.52	RECONSTRUCTION

KEEP STEW DXP

INDEX OF SHEETS

SHEET	SHEET TITLE	DATE
1	COVERSHEET	5/18/2020
2	VICINITY MAP	5/18/2020
3	ESTIMATE OF QUANTITIES	5/18/2020
4	RECONSTRUCTION SUMMARIES, 4400000 & 4400620	5/18/2020
5	ROAD RECONSTRUCTION TYPICALS	5/18/2020
6	DRAINAGE CONSTRUCTION DETAILS	5/18/2020
7	DRAINAGE LISTING AND CONSTRUCTION DETIALS	5/18/2020
8	CLEARING & DISPOSAL DETAILS	5/18/2020

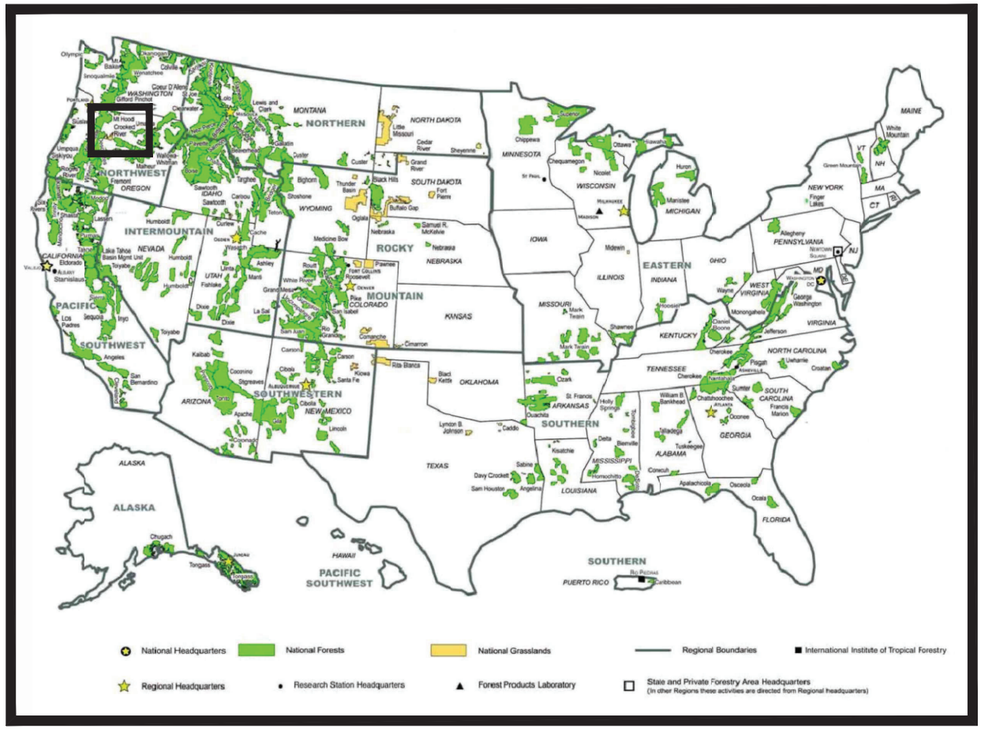

FOREST LOCATION

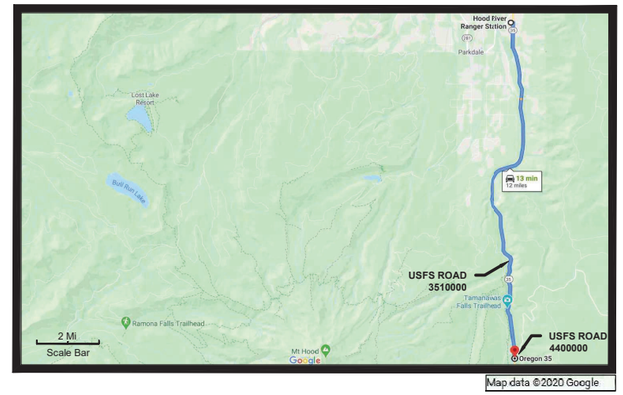

PROJECT LOCATION MAP

TRAVEL DIRECTIONS:

STARTING FROM HOOD RIVER RANGER STATION, HEAD SOUTH FOR 8.8 MILES ON OR-35 S TOWARD TOLL BRIDGE RD. TURN RIGHT ONTO COOPER SPUR ROAD (ROAD 3510000). CONTINUE ON ROAD 3510000 FOR 2.2 MILES. THE 3510620 ROAD WILL BE ON THE LEFT (45.42411, - 121.589404).

TO GET TO THE 4400000 ROAD, CONTINUE ON THE OR-35 S FOR AN ADDITIONAL 3.2 MI PAST THE 3510000 ROAD JCT., THEN LEFT ONTO THE 4400000 (45.373992, - 121.56674).

DESIGNED BY:

MICHAEL THOMAS — Digitally signed by MICHAEL THOMAS Date: 2020.06.19 09:51:02 -07'00'
MICHAEL THOMAS - PROJECT ENGINEER — DATE

CATHERINE HAHN — Digitally signed by CATHERINE HAHN Date: 2020.06.19 10:23:52 -07'00'
CATHERINE HAHN - PROJECT ENGINEER — DATE

RIVIEWED BY:

Peter Huppi — Digitally signed by Peter Huppi Date: 2020.06.19 14:58:06 -07'00'
PETER HUPPI - PEER REVIEWER — DATE

JOSHUA LATHAM — Digitally signed by JOSHUA LATHAM Date: 2020.06.22 08:36:08 -07'00'
JOSH LATHAM - DESIGNATED ENGINEER — DATE

MICHAEL HOWARD — Digitally signed by MICHAEL HOWARD Date: 2020.06.22 07:19:35 -07'00'
MICHAEL HOWARD - ZONE ENGINEER — DATE

APPROVED BY:

KAMERON SAM — Digitally signed by KAMERON SAM Date: 2020.06.22 11:48:53 -07'00'
JANEEN TERVO - DISTRICT RANGER — DATE

Kristin A Austin — Digitally signed by Kristin A Austin Date: 2020.06.22 09:08:31 -07'00'
KRISTIN AUSTIN - FOREST ENGINEER — DATE

5/21/20 15:45 MJTHOMAS C:\USERS\MJTHOMAS\DOCUMENTS\2019 CURRENT PROJECTS\KEEP TS MT. HOOD NF\KEEP FROM BOX 1. 24. 20\REVIEW\AFTER CORRECTIONS 4. 20. 20\KEEP STEW POST PLAN IN HAND CHANGESS. 18. 20.DWG;

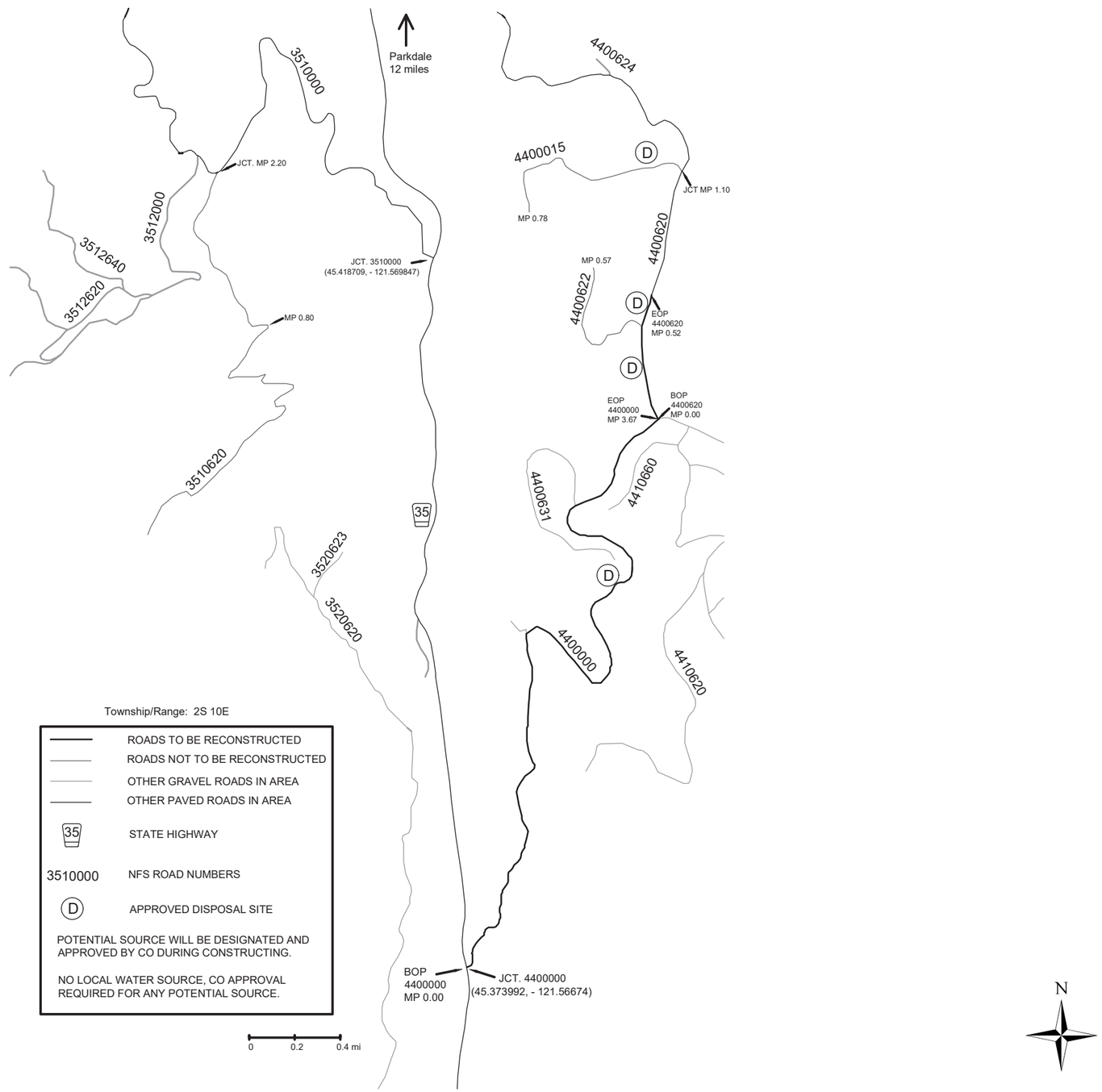

Township/Range: 2S 10E

———	ROADS TO BE RECONSTRUCTED
———	ROADS NOT TO BE RECONSTRUCTED
———	OTHER GRAVEL ROADS IN AREA
———	OTHER PAVED ROADS IN AREA
35	STATE HIGHWAY
3510000	NFS ROAD NUMBERS
D	APPROVED DISPOSAL SITE

POTENTIAL SOURCE WILL BE DESIGNATED AND APPROVED BY CO DURING CONSTRUCTING.

NO LOCAL WATER SOURCE, CO APPROVAL REQUIRED FOR ANY POTENTIAL SOURCE.

United States Department of Agriculture
Forest Service

R 06
REGION SIX

STAMPS, LOGOS, AND SEALS

NO.	REVISION / ISSUE	DATE
4		
3		
2		
1		

PROJECT NAME

KEEP STEW DxP

MT. HOOD NATIONAL FOREST

HOOD RIVER RANGER DISTRICT

DRAWING TITLE

VICINITY MAP

DATE 05/18/2020	ARCHIVE NO.
DESIGNER M.THOMAS	DRAWING SHEET NO. 2
DRAWN C.HAHN	
CHECKED P.HUPPI	
PROJECT NO.	SHEET 2 OF 8

6/19/20 09:43 MJTHOMAS C:\USERS\MJTHOMAS\DOCUMENTS\2019 CURRENT PROJECTS\KEEP TS MT. HOOD NF\KEEP FROM BOX 1_24_20\REVIEW\AFTER CORRECTIONS 4_20_20\KEEP STEW POST PLAN IN HAND CHANGES5_18_20.DWG;

ITEM NUMBER	DESCRIPTION - All Roads	UNIT			REMARKS
	FS ROAD NUMBER		4400000	4400620	
	PROJECT ROAD LENGTH	MILES	3.67	0.52	
15101	MOBILIZATION	LUMP SUM	ALL	ALL	INCLUDES EQUIPMENT WASHING, TEMPORARY TRAFFIC CONTROL, AND FIRE PROTECTION MEASURES FOR ENTIRE PROJECT.
20103	CLEARING AND GRUBBING, DISPOSAL OF TOPS AND LIMBS (f), LOGS (i), STUMPS (f)	MILE	-	0.52	SCATTER EXISTING WOODY DEBRIS OR BLOWDOWN (WITHIN THE ROADWAY) OUTSIDE THE CLEARING LIMITS OR AS SPECIFIED BY THE CONTRACTING OFFICER.
20207A	REMOVAL OF INDIVIDUAL TREES, DISPOSAL METHOD (f)	EACH	8	4	FELL AND LEAVE ALL DANGER TREES MARKED BY CONTRACTING OFFICER.
20207B	REMOVAL OF INDIVIDUAL TREES, MISCELLANEOUS: DISPOSAL OF TOPS AND LIMBS (F), LOGS (I), STUMPS (F)	EACH		1	FELL AND LEAVE ALL DANGER TREES MARKED BY CONTRACTING OFFICER.
20302	REMOVAL OF EXISTING CULVERT, DISPOSAL METHOD (a)	EACH	1	1	EXCAVATION TO REMOVE CULVERT IS INCLUDED IN 60201 PAY ITEMS. REMOVE CULVERT FROM GOVERNMENT LAND.
20304	REMOVAL OF EXISTING ASPHALT, DISPOSAL METHOD (a)	SQUARE YARD	88.0	-	SAW CUT AND REMOVE ASPHALT FROM GOVERNMENT LAND.
20424A	DRAINAGE EXCAVATION, TYPE OUTLET DITCH	FOOT	50	70	
20425C	DRAINAGE EXCAVATION, TYPE CULVERT CATCHBASIN	EACH	-	4	
25104	KEYED RIPRAP, CLASS 3	CUBIC YARD*	3	3	OUTLET DISSIPATERS, COMMERCIAL SOURCE SEE SHEET (8 OF 8)
30101	AGGREGATE BASE, GRADING B	CUBIC YARD*	20	-	COMMERCIAL SOURCE, QUANTITY SHOWN IS COMPACTED IN PLACE (METHOD B).
30115	AGGREGATE SURFACE COURSE, GRADING D	CUBIC YARD*	-	245	COMMERCIAL SOURCE, QUANTITY SHOWN IS COMPACTED IN PLACE (METHOD B).
30315	ROADWAY RECONDITIONING, COMPACTION METHOD (2)	MILE	-	0.52	HAUL MATERIAL TO DESIGNATED DISPOSAL AREAS AND SHAPE TO DRAIN ALL DISPOSAL PILES PRIOR TO FINAL ACCEPTANCE, THIS WORK INCLUDES TURNOUTS AND CURVE WIDEING.
40304	ASPHALT CONCRETE, STATE OF OREGON, TYPE II	TON	20.00	-	
60201A	18 INCH PIPE CULVERT, ALUMINIZED STEEL, GAGE 16, 0.064-INCH THICKNESS, COMPACTION METHOD (a1)	FOOT	-	35	COMMERICAL SOURCE. INCLUDES BANDS, GASKETS, AND NECESSARY HARDWARE. INCLUDES BACKFILL AND COMPACTION TO INSTALL CULVERT.
60201B	18 INCH PIPE CULVERT, ALUMINIZED STEEL SQUASH PIPE, GAGE 16, 0.064-INCH THICKNESS, COMPACTION METHOD (a1)	FOOT	-	46	COMMERICAL SOURCE. INCLUDES BANDS, GASKETS, AND NECESSARY HARDWARE. INCLUDES BACKFILL AND COMPACTION TO INSTALL CULVERT.
60201C	24 INCH PIPE CULVERT, ALUMINIZED STEEL, GAGE 16, 0.064-INCH THICKNESS, COMPACTION METHOD (a1)	FOOT	82	-	COMMERICAL SOURCE. INCLUDES BANDS, GASKETS, AND NECESSARY HARDWARE. INCLUDES BACKFILL AND COMPACTION TO INSTALL CULVERT.
62552	SEEDING AND MULCHING, DRY METHOD	LUMP SUM	ALL	ALL	COMMERCIAL SOURCE, CERTIFIED WEED FREE STRAW. ALL SEED WITH BE GOVERNMENT SOURCE. COVER ALL EXPOSED DIRT AND DISPOSAL AREAS.

* DENOTES CONTRACT QUANTITY

United States Department of Agriculture
Forest Service

R 06
REGION SIX

STAMPS, LOGOS, AND SEALS

NO.	REVISION / ISSUE	DATE
4		
3		
2		
1		

PROJECT NAME
KEEP STEW DxP

MT. HOOD NATIONAL FOREST

HOOD RIVER RANGER DISTRICT

DRAWING TITLE
ESTIMATE OF QUANTITIES

DATE 05/18/2020
ARCHIVE NO.
DESIGNER M.THOMAS
DRAWN M.THOMAS
CHECKED P.HUPPI
PROJECT NO.
DRAWING SHEET NO. 3
SHEET 3 OF 8

6/15/20 17:22 MJTHOMAS C:\USERS\MJTHOMAS\DOCUMENTS\2019 CURRENT PROJECTS\KEEP TS MT. HOOD NF\KEEP FROM BOX 1_24_20\REVIEW AFTER CORRECTIONS 4_20_20\KEEP STEW POST PLAN IN HAND CHANGES5_18_20.DWG;

MILE POST	ITEM NUMBER	QUANTITY	UNIT	ROAD 4400000 RECONSTRUCTION SUMMARY
0.00				BEGINNING OF PROJECT. JCT. W/OR-35 AT MP 25.50.
	20207A	8	EACH	REMOVE DANGER TREES, TO BE FIELD IDENTIFIED.
	62552	ALL	LUMP SUM	COVER ALL EXPOSED SOILS AND DISPOSAL PILES WITH SEED AND MULCH.
0.67				REPLACE EXISTING CULVERT.
	20304	88.0	SQUARE YARD*	SAW CUT AND REMOVE ASPHALT CONCRETE FOR CULVERT REPLACEMENT.
	20302	1	EACH	REMOVE EXISTING CULVERT, DISPOSE OF OFF GOVERNMENT LAND.
	60201C	82	FOOT	INSTALL 24-INCH CMP AT SAME SKEW, SUB EXCAVATION BELOW EXISTING GRADE REQUIRED FOR LARGER CULVERT INSTALLATION.
	25104	3	CUBIC YARD*	CONSTRUCT OUTLET DISSIPATER, SEE SHEET (7 OF 8)
	30101	20	CY	PLACE 8" DEPTH AGGREGATE SURFACING OVER COMPACTED SUBGRADE.
	40304	20,0	TON	PLACE 4" DEPTH ASPHALT, MATCH EXISTING WIDTH.
2.51				DISPOSAL AREA LEFT FOR REFERENCE ONLY, PENDING APPROVAL BY CO)
3.66				EXISTING CULVERT.
	20424A	50	FOOT	CONSTRUCT OUTLET DITCH AT -5% SLOPE INLINE WITH CULVERT.
3.67				JCT W/ NFSR 4400620.
				END 63402.
				END OF PROJECT.

MILE POST	ITEM NUMBER	QUANTITY	UNIT	ROAD 4400620 RECONSTRUCTION SUMMARY
0.00				BEGINNING OF PROJECT. JCT W/ 4400000.
	20103	0.52	MILE	BEGIN CLEARING AND GRUBBING, (LOTS OF POISON OAK IN THIS AREA)
	20207A	4	EACH	REMOVE DANGER TREES, TO BE FIELD IDENTIFIED.
	30115	200	CUBIC YARD*	PLACE AND PROCESS AGGREGATE AT LOCATIONS STAKED BY THE CO. MUST HAVE ROADBED APPROVAL PRIOR TO PLACEMENT.
	30315	0.52	MILE	BEGIN RECONDITIONING ROADWAY. SCARIFY A MINIMUM OF 1" BELOW THE DEPTH OF ALL EXISTING POTHOLES, CORRUGATIONS OR SURFACE IRREGULARITIES, INCLUDING TURNOUTS. CLEAN DITCH AND CATCHBASINS WERE WATER FLOW IS INTERRUPTED OR WHERE HINGE POINT IS LESS THAN 1' BELOW SUBGRADE. GRUBBING AND DISPOSAL OF ALL STUMPS AND ROOT MASSES WITHIN THE ROADBED AND DITCH IS REQUIRED.
	62552	ALL	LUMP SUM	COVER ALL EXPOSED SOILS AND DISPOSAL PILES WITH SEED AND MULCH.
0.01				REPLACE CULVERT
	20302	1	EACH	REMOVE EXISTING CULVERT, DISPOSE OF OFF GOVERNMENT LAND.
	60201A	35	FOOT	INSTALL 18-INCH CMP, 90 DEG. SKEW AS STAKED BY CO.
	30115	15	CUBIC YARD*	PLACE AGGREGATE SURFACING CENTERED OVER CULVERT.
0.05				REPLACE CULVERT.
	20302	1	EACH	REMOVE EXISTING CULVERT, DISPOSE OF OFF GOVERNMENT LAND.
	60201B	20	FOOT	INSTALL 18-INCH CMP SQUASH PIPE AT SAME SKEW AND GRADE.
	20424A	70	FOOT	CONSTRUCT OUTLET DITCH.
	25104	2	CUBIC YARD*	CONSTRUCT OUTLET DISSIPATER, SEE SHEET (7 OF 8)
	30115	15	CUBIC YARD*	PLACE AGGREGATE SURFACING CENTERED OVER CULVERT.
0.24				DISPOSAL AREA LEFT (FOR REFERENCE ONLY, PENDING APPROVAL BY CO).
0.37	20425C	1	EACH	RECONSTRUCT CATCHBASIN.
0.40				JCT W/ NFSR 4400622.
0.46				DISPOSAL AREA RIGHT (FOR REFERENCE ONLY, PENDING APPROVAL BY CO).
0.52				REPLACE CULVERT.
	20207B	1	EACH	REMOVE TREE FROM CULVERT OUTLET.
	20302	1	EACH	REMOVE EXISTING CULVERT, DISPOSE OFF OF GOVERNMENT LAND.
	60201B	26	FOOT	INSTALL 18-INCH CMP SQUASH PIPE AT SAME SKEW AND GRADE.
	25104	2	CUBIC YARD*	CONSTRUCT OUTLET DISSIPATER, SEE SHEET (7 OF 8)
	30115	15	CUBIC YARD*	PLACE AGGREGATE SURFACING CENTERED OVER CULVERT.
				END 20103, 30115, 30315.
				END OF PROJECT.
1.10				JCT W/ 4400015.

United States Department of Agriculture
Forest Service

R06
REGION SIX

STAMPS, LOGOS, AND SEALS

NO.	REVISION / ISSUE	DATE
4		
3		
2		
1		

PROJECT NAME

KEEP STEW DxP

MT. HOOD NATIONAL FOREST

HOOD RIVER RANGER DISTRICT

DRAWING TITLE

RECONSTRUCTION SUMMARIES, 4400000 & 4400620

DATE 05/18/2020
ARCHIVE NO.
DESIGNER M.THOMAS
DRAWN M.THOMAS
CHECKED P.HUPPI
PROJECT NO.
DRAWING SHEET NO. 4
SHEET 4 OF 8

5/27/20 10:28 MJTHOMAS C:\USERS\MJTHOMAS\DOCUMENTS\2019 CURRENT PROJECTS\KEEP TS MT. HOOD NF\KEEP FROM BOX 1_24_20\REVIEWAFTER CORRECTIONS 4_20_20\KEEP STEW POST PLAN IN HAND CHANGES5_18_20.DWG;

ASPHALT TABLE FOR CULVERT REPLACEMENT (ROAD 4400000)							
MILE POST	ASPHALT REMOVED (SQUARE YARD*)	CUT LENGTH (FOOT)	CUT WIDTH (FOOT)	AGGREGATE PLACED (CUBIC YARD*)	AGGREGATE DEPTH (INCH)	ASPHALT PLACED (TON)	ASPHALT DEPTH (INCH)
0.67	88.0	30	26	20.	8	20.00	4

HOT ASPHALT PATCHING TYPICALS

PROFILE VIEW

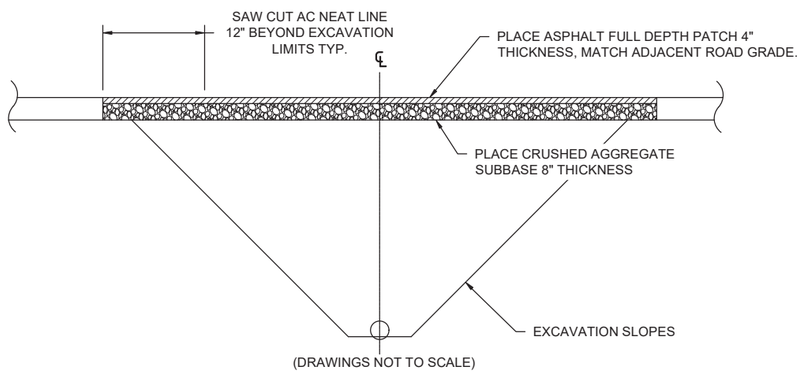

(DRAWINGS NOT TO SCALE)

SECTION VIEW

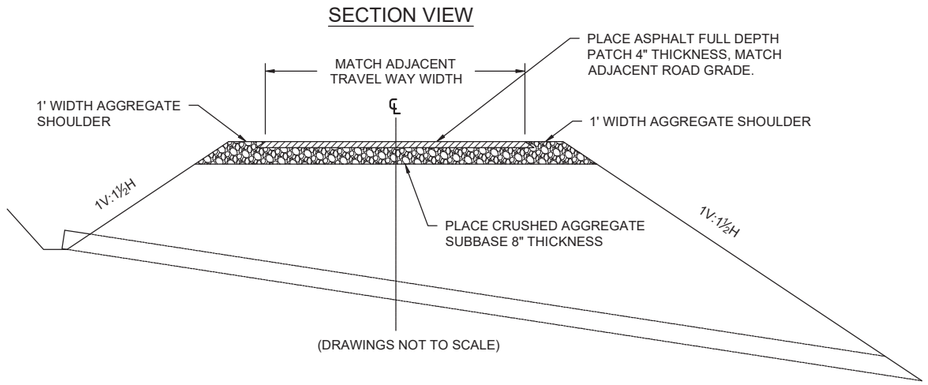

(DRAWINGS NOT TO SCALE)

RECONSTRUCTION TYPICAL
TURNOUT DETAILS

PLAN VIEW

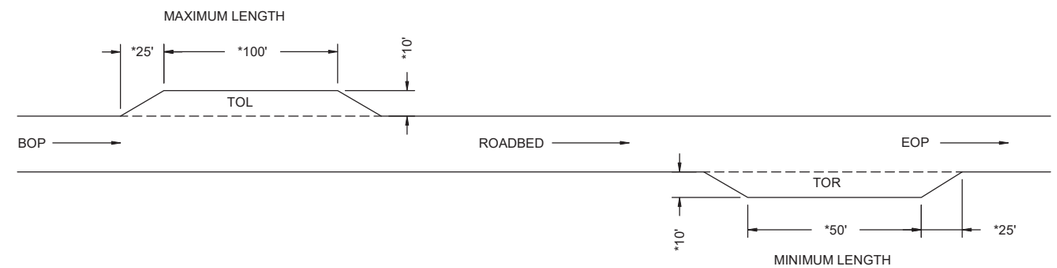

(DRAWINGS NOT TO SCALE)

SECTION VIEW

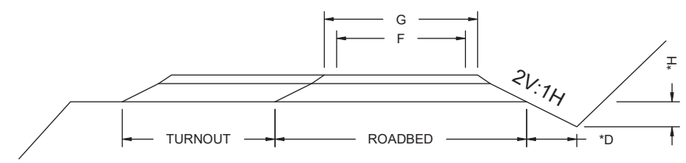

(DRAWINGS NOT TO SCALE)

ROAD NUMBER	MILE POST TO MILE POST	CONSTRUCTION TOLERANCE	GRADING						ROAD STRUCTURE				
			OUTSLOPE (O)	INSLOPE (I)	CROWN (C)	ROADBED WIDTH	DITCH DIMENSIONS		TRAVELED WAY WIDTH	ROADWAY WIDTH	GRADATION		ROCK SLOPE
			%			FT	D	H	FT	FT	C1	C2	V:H
4400000	0.00 TO 3.67	D	N/A			28.67	4*	2*	24	26	AC	AC	2V:1H
4400620	0.00 TO 0.52	D	3(C)*			17.87	2*	1*	12	14	D	B	2V:1H

NOTES:
1. @ WIDTHS ARE MINIMUMS. RECONSTRUCT ROADBED TO THE EXISTING WIDTHS.
2. AGGREGATE IS TO BE PLACED AS DIRECTED IN THE RECONSTRUCTION SUMMARY.
3. *DIMENSIONS MARKED WITH AN ASTERISK MAY BE ADJUSTED DURING CONSTRUCTION BY THE CO TO FIT SITE GEOMETRY.
4. CONSTRUCTION TOLERANCE CAN BE FOUND IN THE FOREST SERVICE SUPPLEMENTAL SPECIFICATIONS (FSSS) TABLE 204-2.
5. AC = ASPHALT CONCRETE

United States Department of Agriculture
Forest Service

R06
REGION SIX

STAMPS, LOGOS, AND SEALS

NO.	REVISION / ISSUE	DATE
4		
3		
2		
1		

PROJECT NAME
KEEP STEW DxP

MT.HOOD NATIONAL FOREST

HOOD RIVER RANGER DISTRICT

DRAWING TITLE
ROAD RECONSTRUCTION TYPICALS

DATE 05/18/2020
ARCHIVE NO.
DESIGNER M.THOMAS
DRAWN M.THOMAS
CHECKED P.HUPPI
PROJECT NO.
DRAWING SHEET NO. 5
SHEET 5 OF 8

5/21/20 16:01 M.THOMAS C:\USERS\MJTHOMAS\DOCUMENTS\2019 CURRENT PROJECTS\KEEP TS MT. HOOD NF\KEEP FROM BOX 1_24_20\REVIEW\AFTER CORRECTIONS 4_20_20\KEEP STEW POST PLAN IN HAND CHANGESS_18_20.DWG;

CULVERT INSTALLATION TYPES

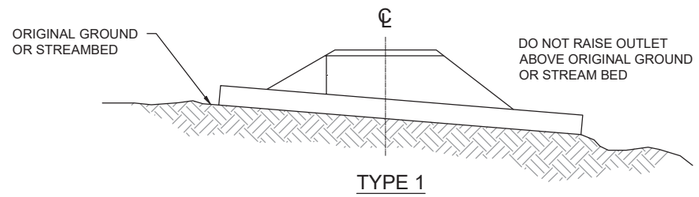

TYPE 1

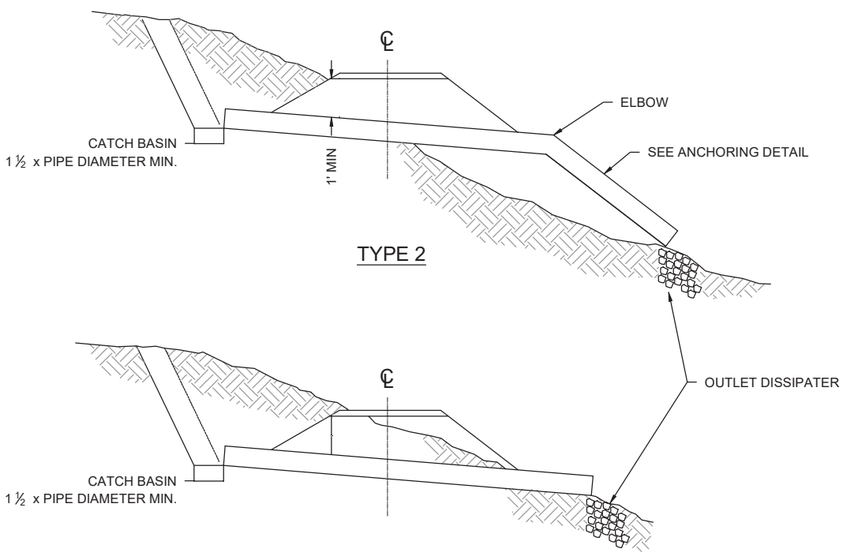

TYPE 2

TYPE 3

SKEW DIAGRAM

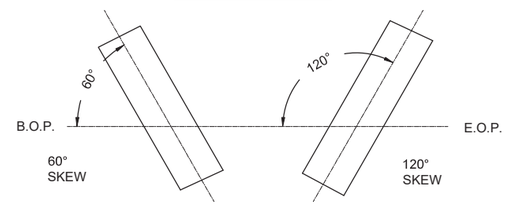

B.O.P. = BEGINNING OF PROJECT
E.O.P. = END OF PROJECT

OUTLET DITCH

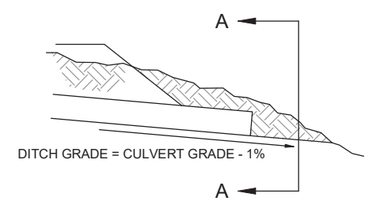

SECTION A-A

MATERIAL TO BE DEPOSITED ON
BOTH SIDES OF DITCH

DITCH DAM PLAN VIEW

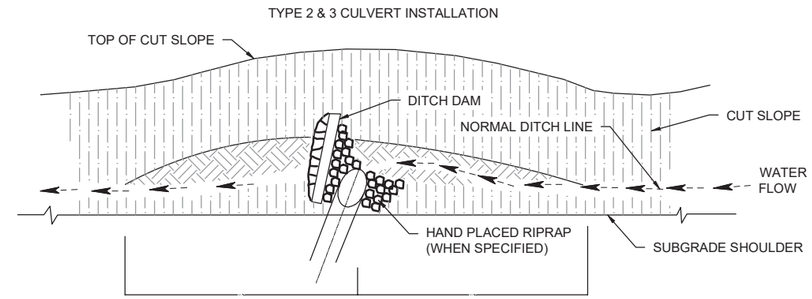

ANCHOR DETAILS

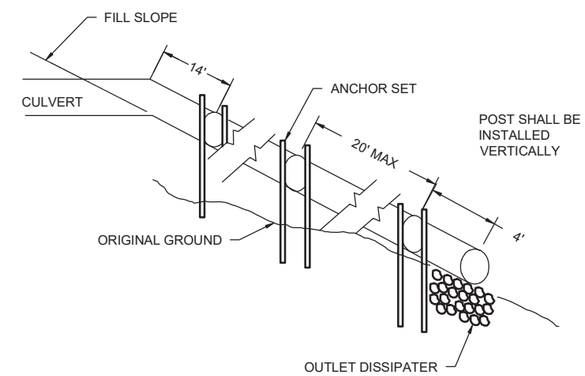

CULVERT INSTALLATION DETAIL

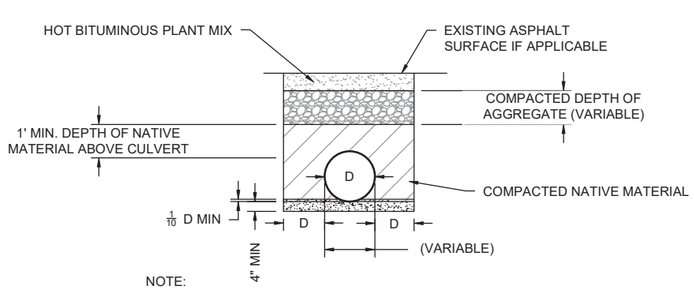

NOTE:
AGGREGATE DEPTH, ASPHALT DEPTH, AND CULVERT DIAMETER (D) CAN BE FOUND IN THE DRAINAGE LISTING AND ROAD RECONSTRUCTION SUMMARY SHEETS.

FLEX ELBOW

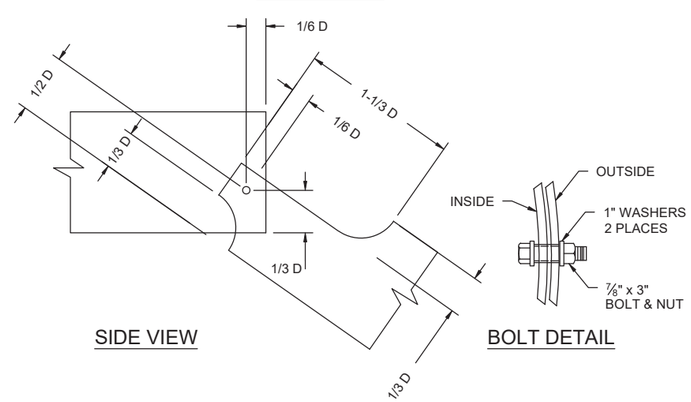

SIDE VIEW

BOLT DETAIL

FASTEN WIRE TO POST

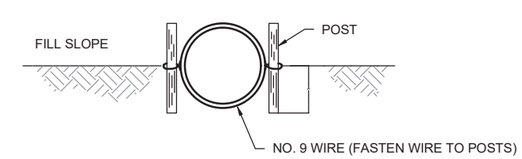

NOTE:
3 FT DIAMETER AND LARGER DOWNPIPE SHALL BE HALF BURIED. ANCHOR SETS SHALL CONSIST OF TWO 6 FT STEEL FENCE POSTS (AASHTO M 281) AND NO. 9 GALVANIZED WIRE. 3 STRANDS OF WIRE SHALL BE TWISTED TOGETHER AND ENCOMPASS THE ENTIRE CIRCUMFERENCE OF THE PIPE.

USDA FOREST SERVICE

United States Department of Agriculture
Forest Service

R 06
REGION SIX

STAMPS, LOGOS, AND SEALS

NO.	REVISION / ISSUE	DATE
4		
3		
2		
1		

PROJECT NAME
KEEP STEW DxP

MT. HOOD NATIONAL FOREST

HOOD RIVER RANGER DISTRICT

DRAWING TITLE
DRAINAGE CONSTRUCTION DETAILS

DATE 05/18/2020	ARCHIVE NO.
DESIGNER M.THOMAS	DRAWING SHEET NO. 6
DRAWN M.THOMAS	
CHECKED P.HUPPI	
PROJECT NO.	SHEET 6 OF 8

5/21/20 16:01 M.THOMAS C:\USERS\M.THOMAS\DOCUMENTS\2019 CURRENT PROJECTS\KEEP TS MT. HOOD NF\KEEP FROM BOX 1_24_20\REVIEW\AFTER CORRECTIONS 4_20_20\KEEP STEW POST PLAN IN HAND CHANGESS_18_20.DWG;

DRAINAGE LISTING

ROAD NUMBER	DESIGNED				AS BUILT				INSTALLATION DETAILS			RIPRAP		CULVERT OUTLET DITCH (FEET)	RECONSTRUCT CULVERT CATCH BASIN	OUTLET DISSIPATER (CY)	RAISE CULVERT CATCH BASIN	JACK OPEN EXISTING CULVERT	AGGREGATE		REMARKS
	MILE POST	PIPE		DROP INLET	MILE POST	PIPE		OUTLET PIPE	TYPE	SKEW (°)	GRADE (%)	KEYED							DEPTH (INCHES)	TOTAL (CY*)	
		DIAMETER (INCH)	LENGTH (FEET)	LENGTH (FEET)		DIAMETER (INCH)	LENGTH (FEET)	FULL CIRCLE				HEADWALL (CY)	SPLASH PAD (CY)								
4400000	0.67	24	82	N/A					#	#	#					3			8	20	
4400620	0.01	18	35	N/A					1	90	6								8	15	
	0.05	13.5 X 22	20	N/A					#	#	#			70		2			8	15	
	0.37														X						RECON. CATCHBASIN
	0.52	13.5 X 22	26	N/A					#	#	#					2			8	15	

# DENOTES SKEW, GRADE AND TYPE SHALL MATCH REMOVED INSTALLATION UNLESS OTHERWISE NOTED.

SOME INSTALLATIONS OF CULVERTS MAY REQUIRE ADDITIONAL EXCAVATION BELOW EXISTING GRADE LINE. (INDIRECT TO CORRESPONDING CULVERT INSTALLATION).

OUTLET DISSIPATER DETAIL

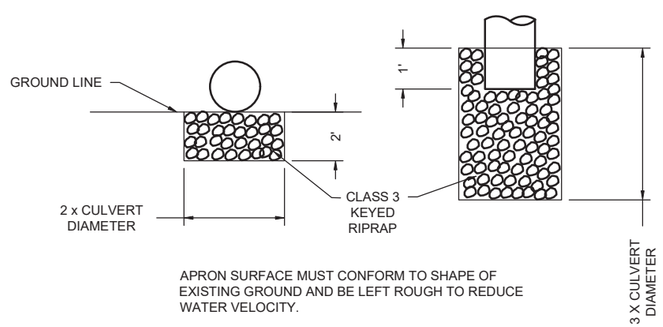

APRON SURFACE MUST CONFORM TO SHAPE OF EXISTING GROUND AND BE LEFT ROUGH TO REDUCE WATER VELOCITY.

OUTLET DISSIPATER TABLE

CULVERT DIA.	RIPRAP CLASS	APRON DINENSIONS	DEPTH OF APRON	RIPRAP QUANTITY
18"	3	4.5' X 3'	2'	1 CY
13.5" X 22"	3	5.5' X 3.7'	2'	2 CY
24"	3	8' X 4'	2'	3 CY

United States Department of Agriculture
Forest Service

R 06
REGION NSIX

STAMPS, LOGOS, AND SEALS

NO.	REVISION / ISSUE	DATE
4		
3		
2		
1		

PROJECT NAME
KEEP STEW DxP

MT. HOOD NATIONAL FOREST

HOOD RIVER RANGER DISTRICT

DRAWING TITLE
DRAINAGE LISTING & CONSTRUCTION DETAILS

DATE 05/18/2020
ARCHIVE NO.
DESIGNER M.THOMAS
DRAWN M.THOMAS
CHECKED P.HUPPI
PROJECT NO.
DRAWING SHEET NO. 7
SHEET 7 OF 8

5/27/20 10:43 M.THOMAS C:\USERS\M.THOMAS\DOCUMENTS\2019 CURRENT PROJECTS\KEEP TS MT. HOOD NF\KEEP FROM BOX 1_24_20\REVIEW\AFTER CORRECTIONS 4_20_20\KEEP STEW POST PLAN IN HAND CHANGES5_18_20.DWG;

CLEARING AND GRUBBING DETAILS

TYPICAL SECTION

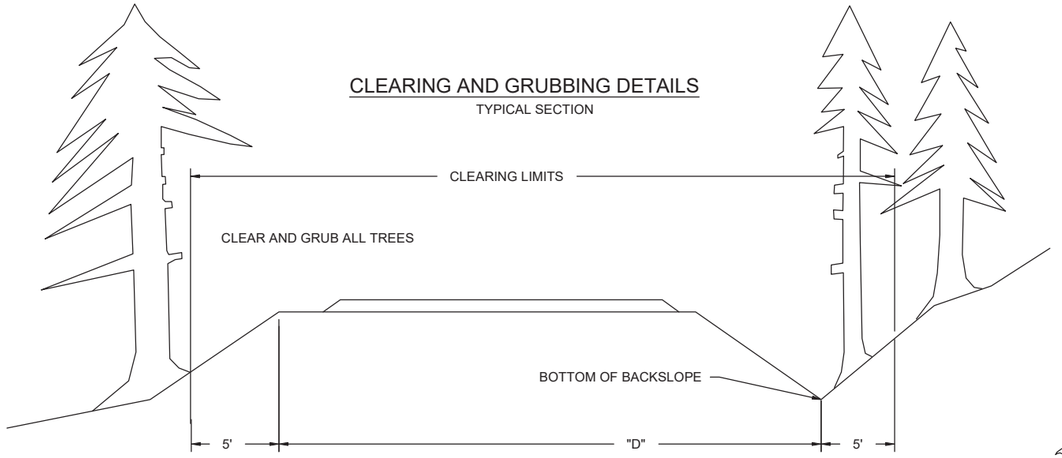

(DRAWINGS NOT TO SCALE)

DISPOSAL AREA TYPICAL

SECTION VIEW

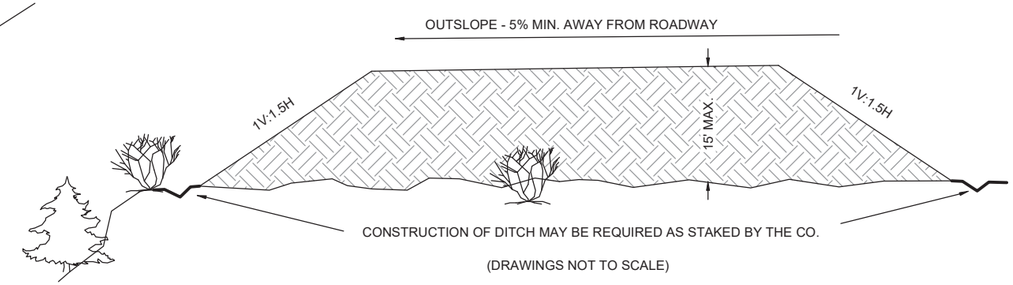

(DRAWINGS NOT TO SCALE)

CLEARING AND GRUBBING NOTES:

1. LEAVE TREES OVER 8 INCHES IN DIAMETER AS MEASURED AT 4½' ABOVE THE GROUND THAT ARE BEYOND THE BOTTOM OF DITCH AND BEYOND HINGE POINT ON THE FILL SLOPE SIDE. LIMB TO 14 FEET ABOVE THE ROAD SURFACE.
2. REMOVE TREES AND GRUB STUMPS WITHIN "D". HAUL TO DESIGNATED DISPOSAL AREAS OR AS NOTED ON THE WORK DESCRIPTIONS.
3. CUT ALL VEGETATION TO A MAXIMUM HEIGHT OF 6 INCHES ABOVE THE GROUND SURFACE.
4. ROADS MECHANICALLY BRUSHED MAY REQUIRE MANUAL SCATTERING OF CUT MATERIAL BEYOND THE BRUSHING LIMITS.
5. ALL CLEARING AND GRUBBING SPECIFICATIONS SHALL BE SCATTERED OUTSIDE CLEARING LIMITS ON FOREST SERVICE LANDS UNLESS OTHERWISE DESIGNATED. DO NOT CREATE LARGE PILES OF BRUSH WHEN SCATTERING.

DISPOSAL AREA TYPICAL WITH VERTICAL FACE

SECTION VIEW

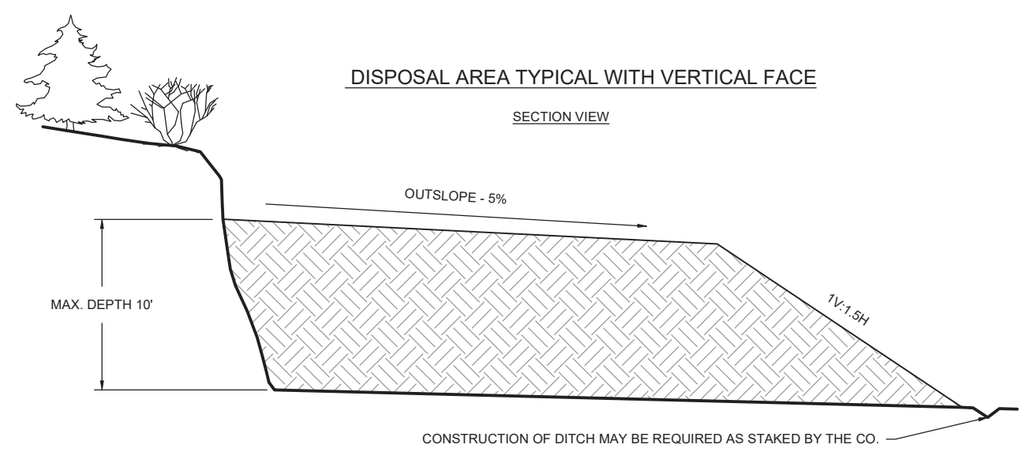

(DRAWINGS NOT TO SCALE)

DISPOSAL AREA NOTES:

1. SCATTER MULCH OVER DISPOSAL AREA AND ENSURE REQUIRED DRAINAGE.
2. DISPOSAL AREA LIMITS TO BE FLAGGED BY THE CO.
3. MAINTAIN MINIMUM 5' DISTANCE FROM DOWNHILL SLOPES ON ALL SIDES.
4. DISPOSAL MATERIAL MAY ALSO BE PLACED AGAINST CUT BANKS AS APPROVED BY CO.
5. SHAPE AND MACHINE COMPACT DISPOSAL AREA.
6. ALL SIDE SLOPES SHALL BE 1V : 1½H.

United States Department of Agriculture
Forest Service

R 06
REGION SIX

STAMPS, LOGOS, AND SEALS

NO.	REVISION / ISSUE	DATE
4		
3		
2		
1		

PROJECT NAME

KEEP STEW DxP

MT. HOOD NATIONAL FOREST

HOOD RIVER RANGER DISTRICT

DRAWING TITLE

CLEARING & DISPOSAL DETAILS

DATE 05/01/2020	ARCHIVE NO.
DESIGNER M.THOMAS	DRAWING SHEET NO. 8
DRAWN M.THOMAS	
CHECKED P.HUPPI	
PROJECT NO.	SHEET 8 OF 8

5/21/20 16:06 MJTHOMAS C:\USERS\MJTHOMAS\DOCUMENTS\2019 CURRENT PROJECTS\KEEP TS MT. HOOD NF\KEEP FROM BOX 1_24_20\REVIEW\AFTER CORRECTIONS 4_20_20\KEEP STEW POST PLAN IN HAND CHANGESS_18_20.DWG;

KEEP STEW DxP - FP 14 SPECFICATION LIST

All specifications not included in the specification listing, but included by reference, are applicable. "X" denotes applicable standard and/or supplemental specification. The supplementals shown on the specification list are physically attached.

STANDARD SPECIFICATIONS				
STANDARD SPECIFICATIONS	DATE	TITLE	4400000	4400620
101-109	2012		X	X
151	2012	MOBILIZATION	X	X
152	2012	CONSTRUCTION SURVEY AND STAKING	X	X
157	2012	SOIL EROSION CONTROL	X	X
201	2012	CLEARING AND GRUBBING		X
202	2012	ADDITIONAL CLEARING AND GRUBBING	X	X
203	2012	REMOVAL OF STRUCTURES AND OBSTRUCTIONS	X	X
204	2012	EXCAVATION AND EMBANKMENT	X	X
209	2012	STRUCTURE EXCAVATION AND BACKFILL	X	X
251	2012	RIPRAP	X	X
301	2012	UNTREATED AGGREGATE COURSES	X	X
303	2012	ROAD RECONDITIONING		X
403	2012	ASPHALT CONCRETE	X	
602	2012	CULVERTS AND DRAINS	X	X
625	2012	TURF ESTABLISHMENT	X	X
635	2012	TEMPORARY TRAFFIC CONTROL	X	X
703	2012	AGGREGATE	X	X
704	2012	SOIL	X	X
SUPPLEMENTAL SPECIFICATIONS	DATE	TITLE	4400000	4400620
PREFACE	01/30/20	PREFACE	X	X
101.01	09/15/16	MEANING OF TERMS	X	X
101.01	09/15/16	MEANING OF TERMS	X	X
101.03	04/07/15	ABBREVIATIONS	X	X
101.04	09/05/18	DEFINITIONS	X	X
102.00	09/15/16	BID, AWARD, AND EXECUTION OF CONTRACT	X	X
103.00	09/15/16	DELETIONS	X	X
104.00	09/15/16	DELETIONS	X	X
104.03	10/23/16	SPECIFICATIONS AND DRAWINGS	X	X

104.06	09/16/16	USE OF ROADS BY CONTRACTOR	X	X
105.02(a)	10/23/16	GOVERNMENT PROVIDED SOURCES	X	X
105.02(c)	10/23/16	CONTRACTOR-LOCATED SOURCES	X	X
106.01	07/18/17	CONFORMITY WITH CONTRACT REQUIREMENTS	X	X
106.02	10/23/16	DELETIONS	X	X
106.07	10/23/16	DELETIONS	X	X
107.05	07/18/17	RESPONSIBILITY FOR DAMAGE CLAIMS	X	X
107.08	10/23/16	SANITATION, HEALTH, AND SAFETY	X	X
108.00	09/16/16	DELETE	X	X
109.00	09/16/16	DELETIONS	X	X
109.01	02/22/19	MEASUREMENT OF WORK	X	X
109.02	09/16/16	MEASUREMENT TERMS AND DEFINITIONS	X	X
155.00	09/14/16	DELETE	X	X
156.00	09/14/16	COMPLETE SPECIFICATION	X	X
157.04	09/14/16	GENERAL	X	X
201.04	10/06/16	CLEARING		X
201.06	10/06/16	DISPOSAL		X
201.06	02/22/18	DISPOSAL		X
203.05	10/07/16	DISPOSING OF MATERIAL	X	X
204.00	09/16/16	COMPLETE SPECIFICATION	X	X
209.09	07/18/17	BACKFILL	X	X
209.10	07/17/17	COMPACTING	X	X
301.03	07/17/17	UNTREATED AGGREGATE COURSES	X	X
301.04	05/31/18	DELETIONS	X	X
301.05	07/17/17	COMPACTING	X	X
303.05	05/31/18	ROADBED RECONDITIONING		X
602.05	10/06/16	LAYING METAL PIPE	X	X
703.05	10/06/16	SURFACE COURSE AGGREGATE	X	X
703..05	12/15/16	SUBBASE, BASE, SURFACE COURSE, AND SCREENED AGGREGATE	X	X
704.02	10/06/16	BEDDING MATERIAL	X	X

Preface

Preface_wo_01_30_2020

Delete all but the first paragraph and add the following:

The Forest Service, US Department of Agriculture has adopted FP-14 for construction of National Forest System Roads.

101 - Terms¸ Format¸ and Definitions

101.01_National_9_15_2016

Add the following paragraph to Subsection 101.01:

101.01 Meaning of Terms.

Delete all references to the FAR (Federal Acquisition Regulations) in the specifications when incorporating into 2400-6(T) Timber Sale or 2400-13(T) Stewardship contracts.

101.01_National_9_15_2016

Add the following paragraph to Subsection 101.01:

101.01 Meaning of Terms.

Delete all references to the TAR (Transportation Acquisition Regulations) in the specifications.

101.03_National_4_7_2015

Add the following to Subsection 101.03:

101.03 Abbreviations.

(a) Acronyms.

AGAR — Agriculture Acquisition Regulations

AFPA — American Forest and Paper Association

FSAR — Forest Service Acquisition Regulations

MSHA — Mine Safety and Health Administration

NESC — National Electrical Safety Code

WCLIB — West Coast Lumber Inspection Bureau

(f) Miscellaneous unit abbreviations.

MP	—	milepost	location
ppm	—	parts per million	volume
STA		station	location

101.04_National_9_5_2018

Make the following changes to Subsection 101.04:

101.04 Definitions.

Delete these definitions and replace the following:

Bid Schedule — The Schedule of Items.

Bridge — A structure, including supports, erected over a depression or an obstruction such as water along a road, a trail, or a railway and having a deck for carrying traffic or other loads.

Contractor — The individual or legal entity contracting with the Government for performance of prescribed work. In a timber sale contract, the contractor is the “Purchaser”.

Culvert — Any structure with a bottom, regardless of fill depth, depth of invert burial, or presence of horizontal driving surface, or any bottomless (natural channel) structure with footings that will not have wheel loads in direct contact with the top of the structure.

Drawings — (Public Works Contracts) Design sheets or fabrication, erection, or construction details submitted to the CO by the Contractor according to FAR Clause 52.236-21 Specifications and Drawings for Construction. Also

refers to submissions and submittals.

Notice to Proceed — (Public Works Contracts) Written notice to the Contractor to begin the contract work.

Right-of-Way — A general term denoting (1) the privilege to pass over land in some particular line (including easement, lease, permit, or license to occupy, use, or traverse public or private lands), or (2) Real property necessary for the project, including roadway, buffer areas, access, and drainage areas.

Solicitation—(Public Works Contracts) The complete assembly of documents (whether attached or incorporated by reference) furnished to prospective bidders.

Add the following definitions:

Adjustment in Contract Price — "Equitable adjustment," as used in the Federal Acquisition Regulations, or "construction cost adjustment," as used in the Timber Sale Contract, as applicable.

Change — "Change" means "change order" as used in the Federal Acquisition Regulations, or "design change" as used in the Timber Sale Contract.

Forest Service — The United States of America, acting through the Forest Service, U.S. Department of Agriculture.

Neat Line — A line defining the proposed or specified limits of an excavation or structure.

Pioneer Road — Temporary construction access built along the route of the project.

Purchaser — The individual, partnership, joint venture, or corporation contracting with the Government under the terms of a Timber Sale Contract and acting independently or through agents, employees, or subcontractors.

Protected Streamcourse — A drainage shown on the plans or timber sale area map that requires designated mitigation measures.

Road Order — An order affecting and controlling traffic on roads under Forest Service jurisdiction. Road Orders are issued by a designated Forest Officer under the authorities of 36 CFR, part 260.

Shop Drawings — (Timber and Stewardship Contracts) Referred to as "Drawings" in FP-14, include drawings, diagrams, layouts, schematics, descriptive literature, illustrations, lists or tables, performance and test data, and similar materials furnished by Purchaser to explain in detail specific portions of the work required by the contract.

Utilization Standards —

The minimum size and percent soundness of trees described in Public Works contract specifications or Timber Sale and IRTC contract provisions to determine merchantable timber.

Add Figure 101-1—Illustration of road structure terms:

Figure 101-1—Illustration of road structure terms.

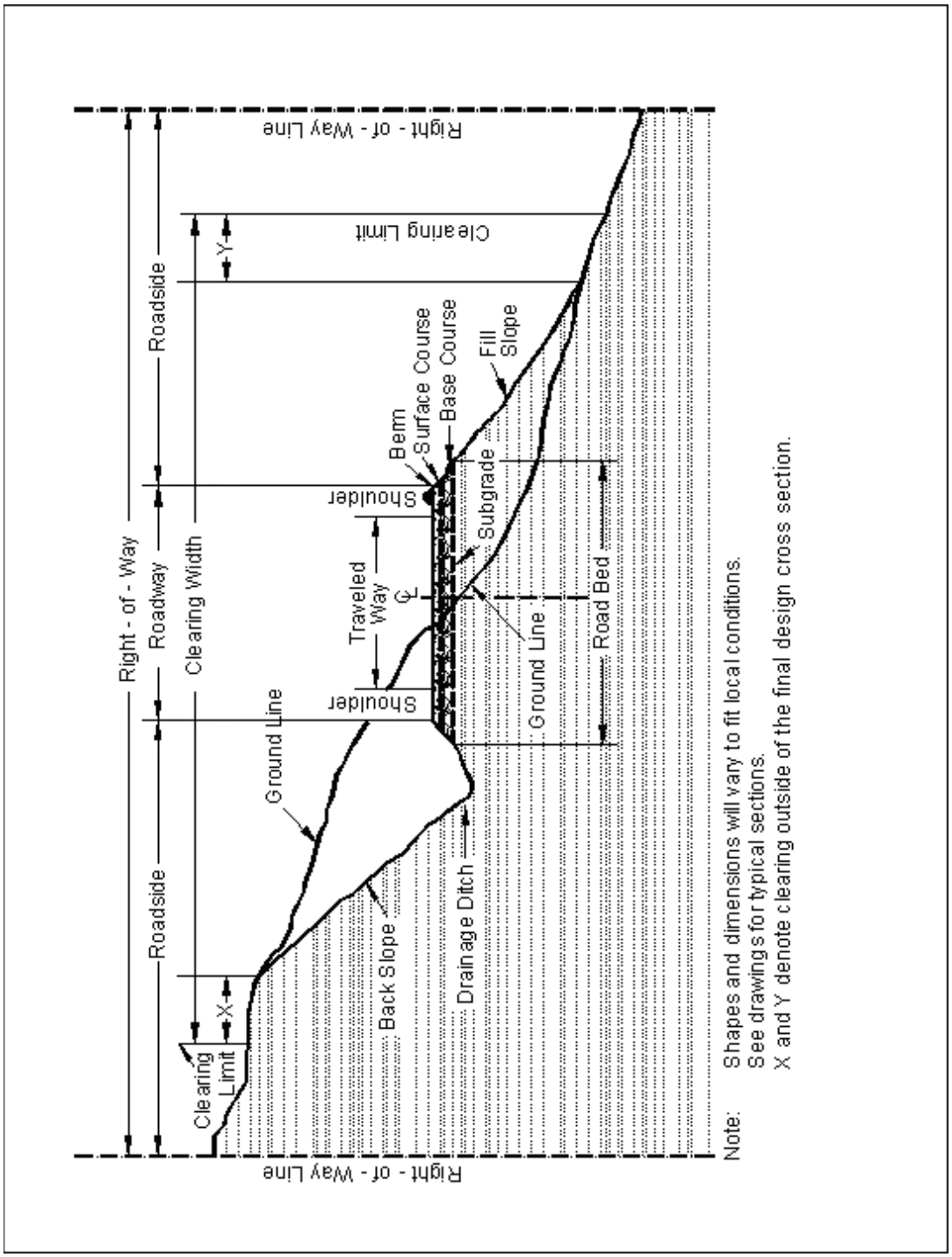

102 - Bid¸ Award¸ and Execution of Contract

102.00_National_9_15_2016

Delete Section 102 in its entirety.

Delete Section 102.

103 - Scope of Work

103.00_National_9_15_2016

Delete all of Section 103 except Subsection 103.01 Intent of Contract.

Delete Subsections 103.02, 103.03, 103.04, 103.05.

104 - Control of Work

104.00_National_9_15_2016

Delete Subsections 104.01, 104.02, and 104.04.

Delete Subsections 104.01, 104.02, 104.04.

104.03_National_10_23_2016

Delete Subsection 104.03 and replace with the following:

104.03 Specifications and Drawings.

Refer to B(T) 5.211 in the 2400-6(T)) or F(T).2.1.1 in the 2400-13(T) contracts for requirements under this subsection.

104.06_National_9_16_2016

Add the following to Subsection 104.06:

104.06 Use of Roads by Contractor.

The Contractor is authorized to use roads under the jurisdiction of the Forest Service for all activities necessary to complete this contract, subject to the limitations and authorizations designated in the Road Order(s) or described in the contract, when such use will not damage the roads or national forest resources, and when traffic can be accommodated safely.

105 - Control of Material

105.02_National_10_23_2016

Add the following to Subsection 105.02(a):

105.02(a) Government-provided sources.

Government-provided sources for this project are identified as follows:

(1) Government-provided mandatory sources.

Pay Item	Description	Material source number or name
62552	**WEED FREE GRASS SEED**	**RIPPLE BROOK GUARD STATION**
	WEED FREE STRAW	**FOREST SERVICE CULVERT YARD**

(2) Government-provided optional sources for this project are identified as follows:

Pay Item	Description	Material source number or name
N/A	**N/A**	**N/A**

If the Contractor elects to obtain material from **RIPPLE BROOK GUARD STATION AND THE FOREST SERVICE CULVERT YARD,** the following applies:

(1) Entry into the above two source locations is restricted since both material sources are located behind locked gates. The Contractor must make prior arrangements with the Contracting Officer prior to pick up.

105.02_National_10_23_2016

Add the following to Subsection 105.02c:

105.02(c) Contractor-located sources.

All material (e.g., soil, gravel, sand, borrow, aggregate, etc.) transported onto National Forest System land or incorporated into the work shall be weed-free. The Contracting Officer may request written documentation of methods used to determine the weed-free status of any and all materials furnished by the contractor. Contractor-provided expertise and methods to establish weed-free status must be appropriate for the weeds of concern in the local area. The following applies to this contract:

Weeds & methods specific to this project:

Invasive Plants on the Mt. Hood National Forest

Alphabetized by common name ← *= priority species*

black locust (*Robinia pseudoacacia*)
Bohemian knotweed (*Polygonum* x *bohemicum*) (synonym *Polygonum cuspidatum x sachalinense*) ←
brownray knapweed (*Centaurea jacea*) ←
bull thistle (*Cirsium vulgare*) ←
butter and eggs (yellow toadflax) (*Linaria vulgaris*) ← east side of the Forest
Canada thistle (*Cirsium arvense*) ←
cheatgrass (*Bromus tectorum*) ← east side of the Forest
common dandelion (*Taraxacum officinale*)
common hawkweed (*Hieracium lachenalii*) ←
common plantain (*Plantago major*)
false brome (*Brachypodium sylvaticum*) ← west side of the Forest
Dalmatian toadflax (*Linaria dalmatica*) ← east side of the Forest
diffuse knapweed (*Centaurea diffusa*) ←
English holly (*Ilex aquifolium*) ← primarily west side of the Forest
English ivy (*Hedera helix*) ← primarily west side of the Forest
English laurel (*Prunus laurocerasus*)
English plantain (*Plantago lanceolata*)
field bindweed (*Convolvulus arvensis*)
hairy cat's-ear (*Hypochaeris radicata*)
herb Robert (*Geranium robertianum*) ← primarily west side of the Forest
Himalayan blackberry (*Rubus armeniacus*) ← primarily west side of the Forest
houndstongue (gypsyflower) (*Cynoglossum officinale*) ← primarily east side of the Forest
Japanese sweet coltsfoot (Japanese butterbur) (*Petasites japonicus*) ← west side of Forest
Japanese knotweed (*Polygonum cuspidatum*; synonym = *Fallopia japonica*) ←
meadow knapweed (Tyrol knapweed) (*Centaurea nigrescens*) ←
medusahead (*Taeniatherum caput-medusae*) ← east side of the Forest
North African wiregrass (*Ventenata dubia*) ← east side of the Forest
orange hawkweed (*Hieracium aurantiacum*) ←
ornamental jewelweed (policeman's-helmet)(*Impatiens glandulifera*) ← primarily west side of Forest
Queen Anne's lace (*Daucus carota*) ←
reed canarygrass (*Phalaris arundinacea*) ←
rush skeletonweed (*Chondrilla juncea*) ←
Scotch broom (*Cytisus scoparius*) ←
shiny leaf geranium, shiny geranium (*Geranium lucidum*) ← primarily west side of the Forest
spotted knapweed (*Centaurea stoebe*) ←
St. John's-wort (*Hypericum perforatum*) ←

sulphur cinquefoil (*Potentilla recta*) ←

tansy ragwort (*Senecio jacobaea*) ← primarily west side of the Forest
whitetop (*Cardaria draba*) ← east side of the Forest
yellow star-thistle (*Centaurea solstitialis*) ← east side of the Forest
yellow toadflax (butter and eggs) (*Linaria vulgaris*) ← east side of the Forest

A Forest Service weed specialist will inspect proposed sources to determine weed-free status. Provide the Contracting Officer written notification of proposed material sources **10** days prior to use. Written approval of the specific source will be provided to the contractor by the CO. If weed species are present in the proposed source, appropriate mitigation measures may allow conditional use of the source as required by the Contracting Officer.

106 - Acceptance of Work

106.01_National_7_18_2017

Delete Subsection 106.01 and replace with the following:

106.01 Conformity with Contract Requirements.

Follow the requirements of FAR Clause 52.246-12 Inspection of Construction.

References to standard test methods of AASHTO, ASTM, GSA, and other recognized standard authorities refer to the methods in effect on the date of solicitation for bids.

Perform all work to the lines, grades, cross-sections, dimensions, and processes or material requirements shown on the plans or specified in the contract.

Incorporate manufactured materials into the work according to the manufacturer's recommendations or to these specifications, whichever is more strict.

Plan dimensions and contract specification values are the values to be strived for and complied with as the design values from which any deviations are allowed. Perform work and provide material that is uniform in character and reasonably close to the prescribed value or within the specified tolerance range. The purpose of a tolerance range is to accommodate occasional minor variations from the median zone that are unavoidable for practical reasons.

When standard manufactured items are specified (such as fence, wire, plates, rolled shapes, pipe conduits, etc., that are identified by gauge, unit mass, section dimensions, etc.), the identification will be considered to be nominal masses or dimensions. Unless specific contract tolerances are noted, established manufacturing tolerances will be accepted.

The Government may inspect, sample, or test all work at any time before final acceptance of the project. When the Government tests work, copies of test reports are furnished to the Contractor upon request. Government tests may or may not be performed at the work site. If Contractor testing and inspection is verified by the Government, the Contractor's results may be used by the Government to evaluate work for acceptance. Do not rely on the availability of Government test results for process control.

Acceptable work conforming to the contract will be paid for at the contract unit bid price. Four methods of

determining conformity and accepting work are described in Subsections 106.02 to 106.05 inclusive. The

primary method of acceptance is specified in each Section of work. However, work may be rejected at any time it is found by any of the methods not to comply with the contract.

Remove, repair, or replace work that does not conform to the contract, or to prevailing industry standards where no specific contract requirements are noted. Removing, repairing, or replacing work; providing temporary traffic control; and any other related work to accomplish conformity will be at no cost to the Government.

(a) Disputing Government test results. If the accuracy of Government test results is disputed, promptly inform the CO. If the dispute is unresolved after reasonable steps are taken to resolve the dispute, further evaluation may be obtained by written request. Include a narrative describing the dispute and a proposed resolution protocol that addresses the following:

1. Sampling method;
2. Number of samples;
3. Sample transport;
4. Test procedures;
5. Testing laboratories;
6. Reporting;
7. Estimated time and costs; and
8. Validation process.

If the evaluation requires additional sampling or testing be performed, mutually agree with the Government on witnessing procedures and on sampling and testing by a third party laboratory. Use a third party laboratory accredited by the AASHTO accreditation program. Provide proof of the laboratory's accreditation for the test procedures to be used. Do not use the same laboratory that produced the disputed Government test results or that produced the test results used as a basis for the dispute.

The CO will review the proposed resolution protocol and may modify it before final approval and execution.

The Government will use the approved resolution protocol test results to determine the validity of the disputed testing. If the Government test results are validated, the Contractor will be responsible for all costs associated with developing and performing the resolution protocol. If the Government test results are not validated, the Government will be responsible for all costs associated with developing and performing the resolution protocol. If the validity of the Government test results cannot be determined, the Contractor and Government will equally share all costs associated with developing and carrying out the resolution protocol.

(b) Alternatives to removing and replacing non-conforming work. As an alternative to removal and replacement, the Contractor may submit a written request to:

1. Have the work accepted at a reduced price; or
2. Be given permission to perform corrective measures to bring the work into conformity.

The request must contain supporting rationale and documentation. Include references or data justifying the proposal based on an evaluation of test results, effect on service life, value of material or work, quality, aesthetics, and other tangible engineering basis. The CO will determine disposition of the nonconforming work.

106.02_National_10_23_2016

Delete Subsection 106.02 and replace with the following:

106.02 Visual Inspection.

Acceptance is based on visual inspection of the work for compliance with the specific contract requirements. Use prevailing industry standards in the absence of specific contract requirements or tolerances.

106.07_National_10_23_2016

Delete Subsection 106.07.

106.07 Partial and Final Acceptance.

107 - Legal Relations and Responsibility to the Public

107.05_National_7_18_2017

Delete Subsection 107.05.

Delete Subsection 107.05.

107.08_National_10_23_2016

Delete Subsection 107.08 and replace with the following:

107.08 Sanitation, Health, and Safety.

Refer to specific provisions under B(T) 6.0 in the 2400-6(T) or G(T).0 in the 2400-13(T) contracts for requirements under this subsection.

108 - Prosecution and Progress

108.00_National_9_16_2016

Delete Section 108 in its entirety.

Delete Section 108.

109 - Measurement and Payment

109.00_National_9_16_2016

Delete Subsections 109.06, 109.07, 109.08, and 109.09:

Delete Subsections 109.06, 109.07, 109.08, 109.09.

109.01_National_2_22_2019

Delete the third paragraph and Table 109-1 of Subsection 109.01 and replace with the following:

109.01 Measurement of Work.

Take measurements as described in Subsection 109.02 unless otherwise modified by the Measurement Subsection of the section controlling the work being performed. Table 109-1 indicates the accuracy required for quantities of the various pay units used in the Schedule of Items. Use this guide to determine the decimal placement in the final payment.

Table 109-1

Decimal Accuracy of Quantities for Final Payment

Pay Item	Level of Precision
Linear Foot	1
Exception--Timber, Steel, and concrete Piles	0.1
Station	0.1
Mile	0.01
Square Foot	0.1
Square Yard	0.1
Each	1
Acre	0.01
Gallon	1
M-Gals.	0.1
Cubic Yard	1
Exception--Structure Excavation; Sheathing Materials; Bedding, Bed Course, and Backfill Materials; Gabions;	0.1
Exception--Concrete; Masonry	0.01
Pound	1
Ton	0.1
Exception--Calcium Chloride; Sodium Chloride; Hydrated Lime; Bituminous Materials; Pavements; Bed Course Materials	0.01
Hour	0.1
MFBM	0.01
Station Yard	1
Cubic Yard Mile	1

Ton Mile	1

109.02_National_9_16_2016

Add the following sentence to Subsection 109.02(b):

109.02 Measurement Terms and Definitions.

(b) Contract quantity.

Contract quantities will be adjusted only when there are errors in the original design of 15% or more.

155 - Schedules for Construction Contracts

155.00_National_9_14_2016

Delete Section 155 in its entirety.

Delete Section 155.

156 - Public Traffic

156.00_National_9_14_2016

Delete Section 156 in its entirety and replace with the following:

Section 156. – PUBLIC TRAFFIC

Description

156.01 This work consists of controlling and protecting public traffic adjacent to and within the project.

Material

156.02 Conform to the MUTCD and the following Sections and Subsections:

Permanent Traffic Control	633	
Traffic Signing and Marking Material		718
Concrete Barriers and Precast Guardwalls	618	
Temporary plastic fence		710.11

Construction Requirements

156.03 General. Accommodate traffic according to MUTCD, approved traffic control plan and this section. Perform work in a manner that ensures safety and convenience of the public. Unless otherwise provided for in Table 156-1, keep existing roads open to all traffic during road improvement work, and maintain them in a condition that will adequately accommodate traffic. Delays may not exceed **240** minutes at any one time followed by an open period of no less than **5** minutes. Accommodate public traffic on roads adjacent to and within the project until the project is accepted according to Subsection 106.07(b).

Submit traffic control plan at least **30 days** prior to intended use. Perform no work that interferes or conflicts

with traffic or existing access to the roadway surface until a traffic control plan has been approved.

Post construction signs and traffic control devices in conformance with MUTCD and Forest Service EM 7100-15. All required signs will be in place and approved prior to beginning work on project.

If the Contractor agrees in writing to allow public traffic to use a new road being constructed prior to completion, it will be considered an existing road for traffic control purposes.

156.04 Temporary Traffic Control. Install and maintain temporary traffic control devices adjacent to and within the project as required by the approved traffic control plan and the MUTCD. Install and maintain traffic control devices as follows:

(a) Furnish and install traffic control devices before the start of construction operations.

(b) All detours outside of clearing limits will be approved in writing by the Contracting Officer as part of the traffic control plan.

(c) Install only those traffic control devices needed for each stage or phase.

(d) Relocate temporary traffic control devices as necessary.

(e) Remove devices that no longer apply to the existing conditions.

(f) Immediately replace any device that is lost, stolen, destroyed, or inoperative.

(g) Keep temporary traffic control devices clean.

(h) Remove all temporary traffic control devices upon contract completion or when approved.

(i) When required, use flaggers certified by the American Traffic Safety Services Association, the National Safety Council, the International Municipal Signal Association, a state agency, or other acceptable organization. Perform the work described under MUTCD Part 6. Use type III, VII, VIII, or IX retroreflective sheeting on flagger paddles. Do not use flags. Flaggers must wear high visibility safety apparel as required by MUTCD 6E.02.

156.05 Temporary Closures. Road segments may be closed as shown in Table 156-1. The maximum consecutive days of closure shall be followed by a minimum number of consecutive days open to traffic as shown. Maintain traffic control devices during closure period(s). Appropriate barricades and signs will be erected and maintained as shown in the traffic control plan or as otherwise designated.

Prior to closing roads during construction, give written notice to the Contracting Officer at least **10 days** in advance.

Table 156-1
Temporary Road Closures

Road Number	From Terminus	To Terminus	Maximum Consecutive Days of Closure	Minimum Consecutive Days Open
4400000	**MP 0.02**	**MP 0.80**	**Mon 7:00 am to Friday 7:00 pm**	**Friday 7:00 pm to Monday 7:00 am**

156.06 Acceptance. Public traffic work will be evaluated under Subsection 106.02.

Measurement and Payment

156.07 Do not measure Public Traffic for payment. Payment for contract work is provided indirectly. See Subsection 109.05.

157 - Soil Erosion and Sediment Control

157.04_National_9_14_2016

Delete Subsection 157.04 and replace with the following:

157.04 General.

Thirty (30) days prior to the start of construction, submit a written plan according to subsection 104.03 with all necessary permits that provides permanent and temporary erosion control measures to minimize erosion and sedimentation during and after construction. Do not begin work until the necessary controls for that particular phase of work have been implemented. Do not modify the type, size, or location of any control without approval.

When erosion control measures are not functioning as intended, take corrective action to eliminate or minimize pollutants in storm water discharges from the project.

201 - Clearing and Grubbing

201.04_National_10_6_2016

Add the following paragraph to Subsection 201.04:

201.04 Clearing.

(e) Do not cut vegetation less than 3 feet in height and less than 3 inches in diameter that is within the clearing limits but beyond the roadway and not in a decking area and that does not interfere with sight distance along the road unless otherwise designated.

201.06_National_10_6_2016

Delete the first sentence of this Subsection 201.06 and replace the following:

201.06 Disposal.

Dispose of merchantable timber designated for removal according to the provisions of the timber sale contract.

201.06_National_2_22_2018

Delete the first sentence of Subsection 201.06 and replace the following:

201.06 Disposal.

Merchantable timber is Government property.

203 - Removal of Structures and Obstructions

203.05_National_10_7_2016

Add the following to Subsection 203.05:

203.05 Disposing of Material.

(e) Windrowing Construction Slash. Place construction slash outside the roadway in neat, compacted windrows approximately parallel to and along the toe line of embankment slopes. Do not permit the top of the windrows to extend above subgrade. Use construction equipment to matt down all material in a windrow to form a compact and uniform pile. Construct breaks of at least 15 feet at least every 200 feet in a windrow. Do not place windrows against trees.

(f) Scattering. Scatter construction slash in designated areas without damaging trees. Limb all logs. Place logs and stumps away from trees, positioned so they will not roll, and are not on top of one another. Limb and scatter other construction slash to reduce slash concentrations. When scattering for erosion control, place construction slash as flat as practicable on the completed slope.

(g) Chipping. Use an approved chipping machine to chip slash longer than 3 feet. Deposit chips on embankment slopes or outside the roadway to a loose depth less than 6 inches. Minor amounts of chips or ground woody material may be permitted within the roadway if they are thoroughly mixed with soil and do not form a layer.

(h) Debris Mat. Use tree limbs, tops, cull logs, split stumps, wood chunks, and other debris to form a mat upon which construction equipment is operated. Place stumps upside down and blend stumps into the mat.

(i) Decking. Remove brush from designated log deck areas. Limb and top logs.

Logs not meeting the Utilization Standards described in Subsection 201.04(c) shall be cut to lengths less than **20** feet and decked in designated log deck location.

Merchantable timber not associated with an existing timber sale shall be cut to length meeting the Utilization Standards described in Subsection 201.04(c).

Deck logs so that logs are piled parallel to one another; can be removed by standard log loading equipment; will not damage standing trees; will not interfere with drainage, and will not roll. Keep logs in log decks free of brush and soil.

(j) Removal to designated locations. Remove construction slash to designated locations.

(k) Piling. Pile construction slash in designated areas. Place and construct piles so that if the piles are burned, the burning will not damage remaining trees. Keep piles free of dirt from stumps.

204 - Excavation and Embankment

204.00_National_9_16_2016

Delete Section 204 in its entirety and replace with the following.

Section 204. — EXCAVATION AND EMBANKMENT

Description

204.01 This work consists of excavating material and constructing embankments. This work also includes furnishing, hauling, stockpiling, placing, disposing, sloping, shaping, compacting, and finishing earthen and rocky material.

204.02 Definitions.

(a) Excavation. Excavation consists of the following:

(1) Roadway excavation. Material excavated from within the right-of-way or easement areas, except subexcavation covered in Subsection 204.02(a)(2) and structure excavation covered in Sections 208 and 209. Roadway excavation includes all material encountered regardless of its nature or characteristics.

(2) Subexcavation. Material excavated from below subgrade elevation in cut sections or from below the original ground-line in embankment sections. Sub excavation excludes the work required by Subsection 204.05 or 204.06.

(3) Borrow excavation. Material used for embankment construction that is obtained from outside the roadway prism. Borrow excavation includes unclassified borrow, and topping.

(b) Embankment construction. Embankment construction consists of placing and compacting roadway or borrow excavation. This work includes:

(1) Preparing foundation for embankment;

(2) Constructing roadway embankments;

(3) Benching for side-hill embankments;

(4) Constructing dikes, ramps, mounds, and berms; and

(5) Backfilling subexcavated areas, holes, pits, and other depressions.

(c) Conserved topsoil. Excavated material conserved from the roadway excavation and embankment foundation areas that is suitable for growth of grass, cover crops, or native vegetation.

(d) Waste. Excess and unsuitable roadway excavation and subexcavation that cannot be used.

Material

204.03 Conform to the following Subsections:

Topping	704.05
Unclassified borrow	704.06
Water	725.01(c)

Construction Requirements

204.04 Preparation for Roadway Excavation and Embankment Construction. Clear the area of vegetation and obstructions according to Sections 201 and 203.

Road pioneering, slash disposal, and grubbing of stumps may proceed concurrently with excavation and embankment. Maintain drainage during pioneering operations.

204.05 Conserved Topsoil. When designated, conserve topsoil from roadway excavation and embankment foundation areas. Stockpile conserved topsoil in low windrows immediately beyond the rounding limits of cut and embankment slopes or in other approved locations. Separate conserved topsoil from other excavated material. When designated, place conserved topsoil on completed slopes according to Section 624.

204.06 Roadway Excavation. Excavate as follows:

(a) Rock cuts. Blast rock according to Section 205. Excavate rock cuts to 6 inches (150 millimeters) below subgrade within the roadbed limits. Backfill to subgrade with topping or other suitable material. Compact the material according to Subsection 204.11.

(b) Earth cuts. Scarify earth cuts to 6 inches (150 millimeters) below subgrade within the roadbed limits. Compact the scarified material according to Subsection 204.11.

(c) Pioneer Roads. Conduct excavation and placement operations so material to be treated under Section 201 will not be incorporated into the roadway unless specified in the slash treatment method. Maintain drainage during pioneering operations.

Remove snow and ice in advance of the work and deposit beyond the roadway limits in a manner that will not waste material or generate sediment. Do not incorporate snow and ice into embankments. Place snow or ice in a manner to prevent resource damage.

(d) Drainage Feature. Drainage feature includes construction of all ditches, minor channel changes, drainage dips, catch basins, surface water deflectors, and other minor drainage structures. Compact the material according to Subsection 204.11. Excavate on a uniform grade between control points.

Do not disturb material and vegetation outside the construction limits. Retrieve material deposited outside the construction limits. Dispose of unsuitable or excess excavation material according to Subsection 204.14. Replace shortage of suitable material caused by premature disposal of roadway excavation.

Shape to drain and compact the work area to a uniform cross-section at the end of each day's operations.

204.07 Subexcavation. Excavate material to the required limits. Dispose of unsuitable material according to Subsection 204.14. Take cross-sections according to Section 152. Backfill subexcavated area with suitable material in horizontal layers not exceeding 12 inches (300 millimeters) in compacted thickness and compact according to Subsection 204.11. Prevent unsuitable material from mixing with suitable backfill material.

204.08 Borrow Excavation. Use suitable roadway excavation in embankment construction. Do not use borrow excavation when it results in excess roadway excavation. Deduct excess borrow excavation from the total borrow excavation quantity.

Obtain borrow source approval according to Subsection 105.02. Develop and restore borrow sources according to Subsections 105.03 and 105.06. Do not excavate beyond the established limits. When applicable, shape the borrow source to permit accurate measurements when excavation is complete.

204.09 Preparing Foundation for Embankment Construction. Prepare foundation for embankment construction as follows:

(a) Embankment over natural ground. Remove topsoil and break up the ground surface to a minimum depth of 6 inches (150 millimeters) by plowing or scarifying. Compact the ground surface according to Subsection 204.11.

(b) Embankments over an existing asphalt, concrete, or gravel road surface. Scarify gravel roads to a minimum depth of 6 inches (150 millimeters). Scarify or pulverize asphalt and concrete roads to 6 inches (150 millimeters) below the pavement. Reduce particles to a maximum size of 6 inches (150 millimeters) and produce a uniform material. Compact the surface according to Subsection 204.11.

(c) Embankment across ground not capable of supporting equipment. Dump successive loads of embankment material in a uniformly distributed layer to construct the lower portion of the embankment. Limit the layer thickness to the minimum depth necessary to support the equipment.

(d) Embankment on an existing slope steeper than 1V:3H. Cut horizontal steps in the existing slope to a sufficient width to accommodate placement and compaction operations and equipment. Step the slope as the embankment is placed and compacted in layers. Begin each step at the intersection of the original ground and the vertical cut of the previous step.

204.10 Embankment Construction. Incorporate only suitable roadway excavation material into the embankment. When the supply of suitable roadway excavation is exhausted, furnish unclassified borrow to complete the embankment. Obtain written approval before beginning construction of embankments over 6 feet (2 meters) high at subgrade centerline. Construct embankments as follows:

(a) General. At the end of each day's operations, shape to drain and compact the embankment surface to a

uniform cross-section. Eliminate ruts and low spots that could hold water.

During all stages of construction, route and distribute hauling and leveling equipment over the width and length of each layer of material.

Compact embankment side slopes with a tamping foot roller, by walking with a dozer, or by over-building the fill and then removing excess material to the final slope line. For slopes 1V:1¾H or steeper, compact the slopes as embankment construction progresses.

(b) Embankment within the roadway prism. Place embankment material in horizontal layers not exceeding 12 inches (300 millimeters) in compacted thickness. Incorporate oversize boulders or rock fragments into the 12-inch (300-millimeter) layers by reducing them in size or placing them individually as required below. Compact each layer according to Subsection 204.11 before placing the next layer.

Material composed predominately of boulders or rock fragments too large for 12-inch (300-millimeter) layers may be placed in layers up to 24 inches (600 millimeters) thick. Incorporate oversize boulders or rock fragments into the 24-inch (600-millimeter) layer by reducing them in size or placing individual rock fragments and boulders greater than 24 inches (600 millimeters) in diameter as follows:

(1) Reduce rock to less than 48 inches (1200 millimeters) in the largest dimension;

(2) Distribute rock within the embankment to prevent nesting;

(3) Place layers of embankment material around each rock to a depth not greater than that permitted above. Fill voids between rocks; and

(4) Compact each layer according to Subsection 204.11(a) before placing the next layer.

(c) Embankment outside of roadway prism. When placing embankment outside the staked roadway prism, place material in horizontal layers not exceeding 24 inches (600 millimeters) in compacted thickness. Compact each layer according to Subsection 204.11.

204.11 Compaction. Compact the embankment using one of the following methods as specified.

(a) Placement Method 1. Use AASHTO T 27 to determine the quantity of material retained on a No. 4 (4.75-millimeter) sieve. Compact as follows:

(1) More than 80 percent retained on a No. 4 (4.75-millimeter) sieve. Adjust the moisture content to a level suitable for compaction. Fill the interstices around rock with earth or other fine material as practical. Use compression-type rollers at speeds less than 6 feet (1.8 meters) per second and vibratory rollers at speeds less than 3 feet (1 meter) per second. Compact each layer of material full width with one of the following and until there is no visible evidence of further consolidation:

(a) Four roller passes of a vibratory roller having a minimum dynamic force of 40,000 pounds (180 kilonewtons) impact per vibration and a minimum frequency of 1000 vibrations per minute;

(b) Eight roller passes of a 20-ton (20-metric ton) compression-type roller; or

(c) Eight roller passes of a vibratory roller having a minimum dynamic force of 30,000 pounds (130 kilonewtons) impact per vibration and a minimum frequency of 1000 vibrations per minute.

Increase the compactive effort for layers deeper than 12 inches (300 millimeters) as follows:

- For each additional 6 inches (150 millimeters) or fraction thereof, increase the number of roller

passes in Subsection 204.11(a)(1)(a), by four passes; or

- For each additional 6 inches (150 millimeters) or fraction thereof, increase the number of roller passes in Subsection 204.11(a)(1)(b) and (c), by eight passes.

(2) 50 to 80 percent retained on a No. 4 (4.75-millimeter) sieve. Classify the material according to AASHTO M 145. Adjust the moisture content of material classified A-1 through A-5 to a moisture content suitable for compaction. Adjust the moisture content of material classified A-6 and A-7 to within 2 percent of the optimum moisture content. Use AASHTO T 99 to determine the optimum moisture content of the portion of the material passing a No. 4 (4.75-millimeter) sieve. Multiply this number by the percentage of material passing a No. 4 (4.75-millimeter) sieve, and add 2 percent to determine the optimum moisture content of the material.

Use nonvibratory rollers at speeds less than 6 feet (1.8 meters) per second and vibratory rollers at speeds less than 3 feet(1 meter) per second. Compact each layer of material full width according to Subsection 204.11(a)(1).

(3) Less than 50 percent retained on a No. 4 (4.75-millimeter) sieve. Classify the material according to AASHTO M 145. For material classified A-1 or A-2-4, determine the maximum density according to AASHTO T 99, Method C.

Adjust the moisture content of material classified A-1 through A-5 to a moisture content suitable for compaction. Adjust the moisture content of material classified A-6 and A-7 to within 2 percent of the optimum moisture content.

Use compression-type or vibratory rollers. Compact each layer of material full width to at least 95 percent of the maximum density. Determine the in-place density and moisture content according to AASHTO T 310 or other approved test procedures. When required, use AASHTO T 224 to correct for coarse particles.

(b) Placement Method 2. Adjust the moisture content of the material to a moisture content suitable for compaction. Fill the interstices around rock with earth or other fine material as practical. Operate roller compaction equipment over the full width of each layer until there is no visible evidence of further consolidation or, if when a sheepsfoot roller is used, the roller “walks out” of the layer. Make at least three complete passes. Use compression-type rollers at speeds less than 6 feet (1.8 meters) per second and vibratory rollers at speeds less than 3 feet (1 meter) per second. Ensure rollers meet the following requirements:

(1) Steel wheeled rollers, other than vibratory, capable of exerting a force of not less than 250 pounds per inch (4.5 kilogram/millimeter) of width of the compression roll or rolls.

(2) Vibratory steel wheeled rollers equipped with amplitude and frequency controls with a minimum dynamic force of 30,000 pounds (130 kilonewtons) impact per vibration, specifically designed to compact the material on which it is used.

(3) Pneumatic-tired rollers with smooth tread tires of equal size that will provide a uniform compacting pressure for the full width of the roller and capable of exerting a ground pressure of at least 80 psi (550 Kilopascals).

(4) Sheepsfoot, tamping, or grid rollers capable of exerting a force of 250 pounds per inch (4.5 kilogram/millimeter) of width of roller drum.

(c) Placement Method 3. Adjust the moisture content of the material to a moisture content suitable for

compaction. Fill the interstices around rock with earth or other fine material as practical. Operate hauling

and spreading equipment uniformly over the full width of each layer until there is no visible evidence of further consolidation. Make at least three complete passes.

(d) Placement Method 4. Adjust the moisture content of the material to a moisture content suitable for compaction. Fill the interstices around rock with earth or other fine material as practical. Operate hauling and spreading equipment uniformly over the full width of each layer.

(e) Placement Method 5. Adjust the moisture content of the material to a moisture content suitable for compaction. Compact the complete surface with a bucket of an excavator larger than 39,000 pounds (18 metric ton) Gross Vehicle Weight using a minimum of three blows. Overlap compaction by ½ width of bucket.

(f) Placement Method 6. Adjust the moisture content of the material to a moisture content suitable for compaction. Compact using an approved mechanical tamper for a minimum of three complete passes.

When compacting with rollers or hauling and spreading equipment is not practical, use approved mechanical tampers for a minimum of three complete passes.

204.12 Drainage Features. Slope, grade, and shape all drainage features. Remove projecting roots, stumps, rock, or similar matter. Maintain all drainage features in an open condition and without sticks, and other debris.

Form furrow ditches by plowing or using other acceptable methods to produce a continuous furrow. Place excavated material on the downhill side so the bottom of the ditch is approximately 18 inches (450 millimeters) below the crest of the loose material. Clean the ditch using a hand shovel or other suitable method. Shape to provide drainage without overflow.

204.13 Sloping, Shaping, and Finishing. Complete subgrade, slopes, drainage features, culverts, riprap, and other underground minor structures before placing aggregate courses. Slope, shape, and finish to the designated tolerance class as defined in Table 204-2 as follows:

(a) Sloping. Leave earth slopes with uniform roughened surfaces, except as described in Subsection 204.13(b), with no noticeable break as viewed from the road. Except in solid rock, round tops and bottoms of slopes including the slopes of drainage ditches. Round material overlaying solid rock to the extent practical. Scale rock slopes. Slope rounding is not required on tolerance class D through M roads.

If a slide or slipout occurs on a cut or embankment slope, remove or replace the material and repair or restore damage to the work. Bench or key the slope to stabilize the slide. Reshape the cut or embankment slope to an acceptable condition.

(b) Stepped slopes. Where required, construct steps on slopes of 1⅓V:1H to 1V:2H. Construct the steps approximately 18 inches (450 millimeters) high. Blend the steps into natural ground at the end of the cut. If the slope contains non-rippable rock outcrops, blend steps into the rock. Remove loose material found in transitional area. Except for removing large rocks that may fall, scaling stepped slopes is not required.

(c) Shaping. Shape the subgrade to a smooth surface and to the cross-section required. Shape slopes to gradually transition into slope adjustments without noticeable breaks. At the ends of cuts and at intersections of cuts and embankments, adjust slopes in the horizontal and vertical planes to blend into each other or into the natural ground.

(d) Finishing. Ensure that the subgrade is visibly moist during shaping and dressing; smooth and uniform, and

shaped to conform to the typical sections. Remove material larger than 6 inches (150 millimeters) from the top

6 inches (150 millimeters) of the roadbed. Remove unsuitable material from the roadbed, and replace it with suitable material. Scarify to 6 inches (150 millimeters) below the bottom of low sections, holes, cracks, or depressions and bring back to grade with suitable material. Maintain proper ditch drainage.

204.14 Disposal of Unsuitable or Excess Material. Dispose of unsuitable or excess material at designated sites or according to Subsection 203.05(a)

When there is a pay item for waste, shape and compact the waste material in its final location. Do not mix clearing or other material not subject to payment with the waste material.

204.15 Acceptance. See Table 204-1 for sampling, testing, and acceptance requirements.

Material for embankment and conserved topsoil will be evaluated under Subsections 106.02 and 106.04.

Excavation and embankment construction will be evaluated under Subsections 106.02 and 106.04.

Subexcavation will be evaluated under Subsections 106.02 and 106.04.

Measurement

204.16 Measure the Section 204 pay items listed in the bid schedule according to Subsection 109.02 and the following as applicable:

(a) Roadway excavation. Measure roadway excavation in its original position as follows:

(1) Include the following volumes in roadway excavation:

(a) Roadway prism excavation;

(b) Rock material excavated and removed from below subgrade in cut sections;

(c) Unsuitable material below subgrade and unsuitable material beneath embankment areas when a pay item for subexcavation is not listed in the bid schedule;

(d) Ditches, except furrow ditches measured under a separate pay item;

(e) Conserved topsoil;

(f) Borrow material used in the work when a pay item for borrow is not listed in the bid schedule;

(g) Loose scattered rocks removed and placed as required within the roadway;

(h) Conserved material taken from pre-existing stockpiles and used in Section 204 work, except topsoil measured under 624; and

(i) Slide and slip out material not attributable to the Contractor's method of operation.

(2) Do not include the following in roadway excavation:

(a) Overburden and other spoil material from borrow sources;

(b) Over breakage from the backslope in rock excavation;

(c) Water or other liquid material;

(d) Material used for purposes other than required;

(e) Roadbed material scarified in place and not removed;

(f) Material excavated when stepping cut slopes;

(g) Material excavated when rounding cut slopes;

(h) Preparing foundations for embankment construction;

(i) Material excavated when benching for embankments;

(j) Slide or slipout material attributable to the Contractor's method of operation;

(k) Conserved material taken from stockpiles constructed at the option of the Contractor;

(l) Material excavated outside the established slope limits; and

(m) Road pioneering for the convenience of the Contractor.

(3) When both roadway excavation and embankment construction pay items are listed in the bid schedule, measure roadway excavation only for the following:

(a) Unsuitable material below subgrade in cuts and unsuitable material beneath embankment areas when a pay item for subexcavation is not listed in the bid schedule;

(b) Slide and slipout material not attributable to the Contractor’s method of operations; and

(c) Drainage ditches, channel changes, and diversion ditches.

(b) Unclassified borrow, and topping. When measuring by the cubic yard (cubic meter) measure in its original position. If borrow excavation is measured by the cubic yard (cubic meter) in-place, take initial cross-sections of the ground surface after stripping overburden. Upon completion of excavation and after the borrow source waste material is returned to the source, retake cross-sections before replacing the overburden. Do not measure borrow excavation until suitable roadway excavation is depleted.

(c) Embankment construction. Measure embankment construction in its final position. Do not make deductions from the embankment construction quantity for the volume of minor structures.

(1) Include the following volumes in embankment construction:

(a) Roadway embankments;

(b) Material used to backfill sub excavated areas, holes, pits, and other depressions;

(c) Material used to restore obliterated roadbeds to original contours; and

(d) Material used for dikes, ramps, mounds, and berms.

(2) Do not include the following in embankment construction:

(a) Preparing foundations for embankment construction;

(b) Adjustments for subsidence or settlement of the embankment or of the foundation on which the embankment is placed; and

(c) Material used to round fill slopes.

(d) **Rounding cut slopes.** If a pay item for slope rounding is included in the bid schedule measure rounding cut slopes horizontally along the centerline of the roadway. If a pay item is not included for slope rounding is not included in the bid schedule payment will be considered indirect to roadway excavation.

(e) **Waste.** Measure waste by the cubic yard (cubic meter) in its final position. Take initial cross-sections of the ground surface after stripping over-burden. Upon completion of the waste placement, retake cross-sections before replacing overburden.

(f) **Slope scaling.** Measure slope scaling by the cubic yard (cubic meter) in the hauling vehicle.

(g) **Subexcavation.** Measure subexcavation by the cubic yard (cubic meter) in its original position.

(h) **Drainage features.** Measurement includes all excavation, embankment, shaping, and grading necessary for a completed drainage feature.

Payment

204.17 The accepted quantities will be paid at the contract price per unit of measurement for the Section 204 pay items listed in the bid schedule. Payment will be full compensation for the work prescribed in this Section. See Subsection 109.05.

Table 204-1
Sampling, Testing, and Acceptance Requirements

Material or Product (Subsection)	Type of Acceptance (Subsection)	Characteristic	Category	Test Methods Specifications	Sampling Frequency	Point of Sampling	Split Sample	Reporting Time
Source								
Topping (704.05)	Measured and tested for conformance (106.04 & 105)	Classification[1]	–	AASHTO M 145	1 per soil type and source of material	Processed material	Yes	Before using in work
Unclassified borrow (704.06)	"	"	–	"	"	"	"	"
Production								
Topping (704.05) and (204.11(a))	Measured and tested for conformance (106.04)	Moisture-density	–	T 99, Method C[2]	1 per soil type, but not less than 1 per each 13,000 yd^3 (10,000 m^3)	Processed material	Yes	Before using in work
		Density	–	AASHTO T 310 or other approved procedures	1 per 3500 yd^2 (3000 m^2), but not less than 3 per layer	In-place	No	Before placement of next layer
Unclassified borrow (704.06) and (204.11(a))	"	Moisture-density	–	T 99, Method C[2]	1 per soil type, but not less than 1 per each 13,000 yd^3 (10,000 m^3)	Processed material	Yes	Before using in work

Table 204-1
Sampling, Testing, and Acceptance Requirements

Material or Product (Subsection)	Type of Acceptance (Subsection)	Characteristic	Category	Test Methods Specifications	Sampling Frequency	Point of Sampling	Split Sample	Reporting Time
		Density	–	AASHTO T 310 or other approved procedures	1 per 3500 yd^2 (3000 m^2), but not less than 3 per layer	In-place	No	Before placement of next layer
Production (continued)								
Earth embankment (204.11(a))	Measured and tested for conformance (106.04)	Classification	–	AASHTO M 145	1 per soil type	Source of material	Yes	Before using in work
		Moisture-density	–	T 99, Method C(2)	1 per soil type, but not less than 1 per each 13,000 yd^3 (10,000 m^3)	"	"	"
		Density	–	AASHTO T 310 or other approved procedures	1 per 3500 yd^2 (3000 m^2), but not less than 3 per layer	In-place	No	Before placement of next layer
Top of subgrade (204.11(a))	"	Density	–	AASHTO T 310 or other approved procedures	1 per 2500 yd^2 (2000 m^2), but not less than 3 per layer	In-place	No	Before placement of next layer
Finished Product								

Table 204-1
Sampling, Testing, and Acceptance Requirements

Material or Product (Subsection)	Type of Acceptance (Subsection)	Characteristic	Category	Test Methods Specifications	Sampling Frequency	Point of Sampling	Split Sample	Reporting Time
Roadbed (204.13)	Measured and tested for conformance (106.04)	Final line & grade	–	Field measured	Determined by the CO	Determined by the CO	No	Before placement of next layer

(1) Not required when using Government-provided source.
(2) Minimum 5 points per proctor.

Table 204-2
Construction Tolerances

Location Description	Tolerance Class (a)												
	A	B	C	D	E	F	G	H	I	J	K	L	M
Roadbed width (ft)	+0.5	+0.5	+1.0	+1.0	+1.0	+1.0	+1.5	+1.0	+2.0	+2.0	+2.0	+2.0	+2.0
Subgrade elevation (ft)	±0.1	±0.2	±0.2	±0.5	±0.5	±1.0	±1.0	±1.5	±2.0	±3.0	±2.0	±3.0	(c)
Centerline alignment (ft)	±0.2	±0.2	±0.5	±0.5	±1.0	±1.0	±1.5	±1.5	±2.0	±3.0	±3.0	±5.0	(c)
Slopes, excavation, and embankment (% slope[b])	±3	±5	±5	±5	±5	±5	±10	±10	±10	±10	±20	±20	±20

(a) Maximum allowable deviation from construction stakes and drawings.
(b) Maximum allowable deviation from staked slope measured from slope stakes or hinge points.
(c) Unless otherwise shown the centerline alignment and subgrade elevation, as built, have no horizontal curves with a radius of less than 80 feet, and no vertical curves with a curve length of less than 80 feet when the algebraic difference in the grade change is less than 10 percent, or a curve length of less than 100 feet when the algebraic difference of the grade change is greater than or equal to 10 percent. The centerline grade is not to exceed 20 percent in 100 feet of length.

209 - Structure Excavation and Backfill

209.09_National_7_18_2017

Make the following Changes to Subsection 209.09:

209.09 Backfill.

Add the following to Subsection 209.09(a):

(a) General.

Backfill without damaging or displacing the culvert or structural plate structure. Replace any pipe that is distorted by more than 5 percent of nominal dimensions, or that is ruptured or broken.

Add the following to Subsection 209.09(b)

(b) Pipe culverts.

Do not place or backfill pipe that meets any of the following conditions until the excavation and foundation have been approved in writing by the CO:

- Embankment height greater than 6 feet at subgrade centerline.
- Installation in a protected stream course.
- Round pipe with a diameter of 48 inches or greater.
- Pipe arches with a span of 50 inches or greater.
- Any box culvert or structure other than pipe culverts.

209.10_National_7_17_2017

Delete Subsection 209.10 and replace with the following:

209.10 Compacting.

Compact the embankment using one of the following methods as specified.

(a) Compaction Method 1. Use AASHTO T 27 to determine the quantity of material retained on a No. 4 (4.75-millimeter) sieve. Compact as follows:

(1) More than 80 percent retained on a No. 4 (4.75-millimeter) sieve. Adjust the moisture content to a level suitable for compaction. Fill the interstices around rock with earth or other fine material as practical. Use compression-type rollers at speeds less than 6 feet (1.8 meters) per second and vibratory rollers at speeds less than 3 feet (1 meter) per second. Compact each layer of material full width with one of the following and until there is no visible evidence of further consolidation:

(a) Four roller passes of a vibratory roller having a minimum dynamic force of 40,000 pounds (180 kilonewtons) impact per vibration and a minimum frequency of 1000 vibrations per minute;

(b) Eight roller passes of a 20-ton (20-metric ton) compression-type roller; or

(c) Eight roller passes of a vibratory roller having a minimum dynamic force of 30,000 pounds (130 kilonewtons) impact per vibration and a minimum frequency of 1000 vibrations per minute.

Increase the compactive effort for layers deeper than 12 inches (300 millimeters) as follows:

- For each additional 6 inches (150 millimeters) or fraction thereof, increase the number of roller passes in Subsection 209.10(a)(1)(a), by four passes; or
- For each additional 6 inches (150 millimeters) or fraction thereof, increase the number of roller passes in Subsection 209.10(a)(1)(b) and (c), by eight passes.

(2) 50 to 80 percent retained on a No. 4 (4.75-millimeter) sieve. Classify the material according to AASHTO M 145. Adjust the moisture content of material classified A-1 through A-5 to a moisture content suitable for compaction. Adjust the moisture content of material classified A-6 and A-7 to within 2 percent of the optimum moisture content. Use AASHTO T 99 to determine the optimum moisture content of the portion of the material passing a No. 4 (4.75-millimeter) sieve. Multiply this number by the percentage of material passing a No. 4 (4.75-millimeter) sieve, and add 2 percent to determine the optimum moisture content of the material.

Use nonvibratory rollers at speeds less than 6 feet (1.8 meters) per second and vibratory rollers at speeds less than 3 feet(1 meter) per second. Compact each layer of material full width according to Subsection 209.10(a)(1).

(3) Less than 50 percent retained on a No. 4 (4.75-millimeter) sieve. Classify the material according to AASHTO M 145. For material classified A-1 or A-2-4, determine the maximum density according to AASHTO T 99, Method C..

Adjust the moisture content of material classified A-1 through A-5 to a moisture content suitable for compaction. Adjust the moisture content of material classified A-6 and A-7 to within 2 percent of the optimum moisture content.

Use compression-type or vibratory rollers. Compact each layer of material full width to at least 95 percent of the maximum density. Determine the in-place density and moisture content according to AASHTO T 310 or other approved test procedures. When required, use AASHTO T 224 to correct for coarse particles.

(b) Compaction Method 2. Adjust the moisture content of the material to a moisture content suitable for compaction. Fill the interstices around rock with earth or other fine material as practical. Operate roller compaction equipment over the full width of each layer until there is no visible evidence of further consolidation or, if when a sheepsfoot roller is used, the roller "walks out" of the layer. Make at least three complete passes. Use compression-type rollers at speeds less than 6 feet (1.8 meters) per second and vibratory rollers at speeds less than 3 feet (1 meter) per second. Ensure rollers meet the following requirements:

(1) Steel wheeled rollers, other than vibratory, capable of exerting a force of not less than 250 pounds per inch (4.5 kilogram/millimeter) of width of the compression roll or rolls.

(2) Vibratory steel wheeled rollers equipped with amplitude and frequency controls with a minimum dynamic force of 30,000 pounds (130 kilonewtons) impact per vibration, specifically designed to compact the material on which it is used.

(3) Pneumatic-tired rollers with smooth tread tires of equal size that will provide a uniform compacting pressure for the full width of the roller and capable of exerting a ground pressure of at least 80 psi (550 Kilopascals).

(4) Sheepsfoot, tamping, or grid rollers capable of exerting a force of 250 pounds per inch (4.5 kilogram/millimeter) of width of roller drum.

(c) Compaction Method 3. Adjust the moisture content of the material to a moisture content suitable for compaction. Fill the interstices around rock with earth or other fine material as practical. Operate hauling and spreading equipment uniformly over the full width of each layer until there is no visible evidence of further consolidation. Make at least three complete passes.

(d) Compaction Method 4. Adjust the moisture content of the material to a moisture content suitable for compaction. Fill the interstices around rock with earth or other fine material as practical. Operate hauling and spreading equipment uniformly over the full width of each layer.

(e) Compaction Method 5. Adjust the moisture content of the material to a moisture content suitable for compaction. Compact the complete surface with a bucket of an excavator larger than 39,000 pounds (18 metric ton) Gross Vehicle Weight using a minimum of three blows. Overlap compaction by ½ width of bucket.

(f) Compaction Method 6. Adjust the moisture content of the material to a moisture content suitable for compaction. Compact using an approved mechanical tamper for a minimum of three complete passes.

When compacting with rollers or hauling and spreading equipment is not practical, use approved mechanical tampers for a minimum of three complete passes.

301 - Untreated Aggregate Courses

301.03_National_7_17_2017

Add the following to Subsection 301.03:

301.03 General.

Written approval of the roadbed is required before placing aggregate.

For pit run or grid-rolled material, furnish material smaller than the maximum size, no gradation will be required otherwise. After processing on the road, remove all oversize material from the road and dispose as directed by the CO.

Provide additives or binder, if required, at the proportions specified.

Develop and use Government furnished sources according to Section 105.

If the aggregate is produced and stockpiled before placement, handle and stockpile according to Section 314.

301 - Untreated Aggregate Courses

301.04_Regional_5_31_2018

Delete the first paragraph of Subsection 301.04 and replace with the following:

301.04 **Mixing and Spreading.** Obtain moisture content in accordance with the compaction method specified. If moisture content is not specified by the compaction method adjust the moisture content to a level suitable for compaction. Mix the aggregate and adjust the moisture content to obtain a uniform mixture. Spread and shape the mixture on the prepared surface in a uniform layer.

Delete Subsection 301.05 and replace with the following:

301.05 **Compacting.** Compact each layer full width. Roll from the sides to the center, parallel to the centerline of the road. Along curbs, headers, walls, and all places not accessible to the roller, compact the material with approved tampers or compactors.
Compact the aggregate using according to 204.11

For all compaction methods, blade the surface of each layer during the compaction operations to remove irregularities and produce a smooth, even surface. When a density requirement is specified, determine the in place density and moisture content according to AASHTO T 310 or other approved test procedures.

Delete Subsection 301.06 and replace with the following:

301.06 **Surface Tolerance.** Remove irregularities and shape to a uniform surface.

301 - Untreated Aggregate Courses

301.05_National_7_17_2017

Delete Subsection 301.05 and replace with the following:

301.05 Compacting.

Compact each layer full width. Roll from the sides to the center, parallel to the centerline of the road. Along curbs, headers, walls, and all places not accessible to the roller, compact the material with approved tampers or compactors.

Compact the aggregate using one of the following methods as specified:

(a) **Compaction A.** Operating spreading and hauling equipment over the full width of the travelway.
(b) **Compaction B.** Operate rollers and compact as specified in Subsection 204.11(a)(1).
(c) **Compaction C.** Moisten or dry the aggregate to a uniform moisture content between 5 and 7 percent based on total dry weight of the mixture. Operate rollers and compact as specified in Subsection 204.11(a)(1).
(d) **Compaction D.** Compact to a density of at least 95 percent of the maximum density, as determined by AASHTO T 99, method C or D.
(e) **Compaction E**. Compact to a density of at least 95 per-cent of the maximum density, as determined by AASHTO T 180, method C or D.

For all compaction methods, blade the surface of each layer during the compaction operations to remove irregularities and produce a smooth, even surface. When a density requirement is specified, determine the in-place density and moisture content according to AASHTO T 310 or other approved test procedures.

303 - Road Reconditioning

303.05_Regional_5_31_2018

Delete Subsection 303.05 and replace with the following:

303.05 Roadbed Reconditioning.

Remove organic, deleterious, and material larger than 6 inches brought to the surface during reconditioning. Scarify potholes, ruts, and areas shown in the plans to a 6-inch depth or the bottom of the pothole, whichever is less. Dispose of waste at designated sites or according to Subsection 204.14. Repair soft and unstable areas according to Subsection 204.07. Remove irregularities and shape to a uniform surface. Perform the work, including mixing or spreading, when the moisture content is suitable for the specified compaction method. Compact the surface according to Subsection 204.11. Shape the surface according to 204.13(c).

Delete Subsection 303.06 and replace with the following:

303.06 Aggregate Surface Reconditioning.
Repair soft and unstable areas to the full aggregate surface depth and according to Subsection 204.07. Scarify potholes, ruts, and areas shown in the plans to a 6-inch depth or the bottom of the pothole, whichever is less. Remove irregularities and shape to a uniform surface. Perform the work, including mixing or spreading, when the moisture content is suitable for the specified compaction method. Compact the surface according to Subsection 204.11. Shape the surface according to 204.13(c).

602 - Culverts and Drains

602.05_National_10_6_2016

Add the following to Subsection 602.05.

602.05 Laying Metal Pipe.

(c) Standard Connecting bands. Band corrugation shall match that of the pipe sections being joined or the annular rerolled ends of those pipe sections.

703 - Aggregate

703.05_National_10_6_2016

Delete Subsection 703.05(c)(3) and Replace with the following:

703.05 (c) Surface course aggregate. (3) Plastic Index

(3) Plastic Index, AASHTO T 90

If the percent passing the No. 200 sieve is less than 12%	2 to 9
If the percent passing the No. 200 sieve is greater than 12%	Less than 2

Delete 703.05 and replace with the following:

703.05 Subbase, Base, Surface Course, and Screened Aggregate.

(a) Subbase or base aggregate. Furnish hard, durable particles or fragments of crushed stone, crushed slag, or crushed gravel conforming the following:

(1) Gradation	Table 703-2
(2) Liquid limit, AASHTO T 89	25 max.
(3) Plastic limit, AASHTO T 90	Nonplastic
(4) Los Angeles abrasion, AASHTO T 96	40% max.
(5) Sodium sulfate soundness loss (5 cycles), AASHTO T 104	12% max.
(6) Durability index (coarse), AASHTO T 210	35 min.
(7) Durability index (fine), AASHTO T 210	35 min.
(8) Fractured faces, ASTM D 5821	50% min.
(9) Free from organic matter and lumps or balls of clay	

Do not use material that breaks up when alternately frozen and thawed or wetted and dried.

Obtain the aggregate gradation by crushing, screening, and blending processes as necessary. Fine aggregate, material passing the No. 4 sieve, shall consist of natural or crushed sand and fine mineral particles.

(b) Surface course aggregate. Furnish hard, durable particles or fragments of crushed stone, crushed slag, or crushed gravel conforming the following:

(1) Gradation	Table 703-3
(2) Liquid limit, AASHTO T 89	35 max.
(3) Plastic Index, AASHTO T 90	
a) If the percent passing the No. 200 sieve is less than 12%	2 to 9
b) If the percent passing the No. 200 sieve is greater than 12%	Less than 2
(4) Los Angeles abrasion, AASHTO T 96	40% max.
(5) Sodium sulfate soundness loss (5 cycles), AASHTO T 104	12% max.
(6) Durability index (coarse), AASHTO T 210	35 min.
(7) Durability index (fine), AASHTO T 210	35 min.
(8) Fractured faces, ASTM D 5821	75% min.
(9) Free from organic matter and lumps or balls of clay	

Do not use material that breaks up when alternately frozen and thawed or wetted and dried.

Do not furnish material that contains asbestos fibers.

Obtain the aggregate gradation by crushing, screening, and blending processes as necessary. Fine aggregate, material passing the No. 4 sieve, shall consist of natural or crushed sand and fine mineral particles.

(c) Screened aggregate – Furnish hard, durable particles or fragments of stone, slag, or gravel conforming the following:

(1) Gradation	Table 703-16
(2) Plastic Index, AASHTO T 90	Less than 9
(3) Los Angeles abrasion, AASHTO T 96	55% max.
(4) Free from organic matter and lumps or balls of clay.	

Do not use material that breaks up when alternately frozen and thawed or wetted and dried.

Obtain the aggregate gradation by crushing, screening, and blending processes as necessary.

KEEP STEW DxP

Delete Table 703-2 and replace with the following:

Table 703-2
Target Value Ranges for Subbase and Base Gradation

Sieve Size	Percent by Mass Passing Designated Sieve (AASHTO T 27 and T 11)				
	Grading Designation				
	A (Subbase)	B (Subbase)	C (Base)	D (Base)	E (Base)
2½ inch	100				
2 inch	97 – 100	100	100		
1½ inch		97 – 100			
1 inch	65 – 79 (6)		80 – 100 (6)	100	
3/4 inch			64 – 94 (6)	86 – 100 (6)	100
1/2 inch	45 – 59 (7)				
3/8 inch			40 – 69 (6)	51 – 82 (6)	62 – 90 (6)
No. 4	28 – 42 (6)	40 – 60 (8)	31 – 54 (6)	36 – 64 (6)	36 – 74 (6)
No. 40	9 – 17 (4)			12 – 26 (4)	12 – 26 (4)
No. 200	4.0 – 8.0 (3)	4.0 – 12.0 (4)	4.0 –7.0 (3)	4.0 – 7.0 (3)	4.0 – 7.0 (3)

( ) The value in the parentheses is the allowable deviation (±) from the target values..

Delete Table 703-3 and replace with the following:

Table 703-3
Target Value Ranges for Surface Gradation

Sieve Size	Percent by Mass Passing Designated Sieve (AASHTO T 27 and T 11)					
	Grading Designation					
	F	G	H	S	T	U
1 1/2 inch	100			100		
1 inch	97-100	100		72 – 92 (6)	100	
3/4 inch	76-89 (6)	97 - 100	97 - 100			100
1/2 inch					71 – 91 (6)	
3/8 inch	56-68 (6)	70 – 80 (6)	80 – 92 (6)	51 – 71 (6)		71 – 90 (6)
No. 4	43-53 (7)	51 – 63 (7)	58 – 70 (7)	36 – 53 (7)	43 – 60 (7)	50 – 68 (7)
No. 8				26 – 40 (6)	30 – 46 (6)	34 – 51 (6)
No. 16	23-32 (6)	28 – 39 (6)	28 – 40 (6)			
No. 40	15-23 (5)	19 – 27 (5)	16 – 26 (5)	14 – 25 (5)	16 – 28 (5)	19 – 30 (5)
No. 200	10.0-16.0 (4)	10.0 – 16.0 (4)	9.0 – 14.0 (4)	8.0 – 15.0 (4)	8.0 – 15.0 (4)	8.0 – 15.0 (4)

( ) The value in the parentheses is the allowable deviation (±) from the target values.
If the plasticity index (PI) is greater than 0, the TV range for the No. 200 sieve size is 8-12 (4).

Add Table 703-13:

Table 703-13
Gradation Requirements for Screened Aggregate

Sieve Size	Percent by Mass Passing Designated Sieve (AASHTO T 27 and T 11)						
	Grading Designation						
	L	M	N	O	P	Q	R
6 inch	100	100					
4 inch			100	100			
3 inch					100	100	
2 inch							100
No. 4		15-45		15-45		15-45	

704 - Soil

704.02_National_10_6_2016

Delete Subsection 704.02(a) and replace with the following:

704.02 Bedding Material.

(a) Maximum particle size — 3 in (75 millimeters) or half the corrugation depth, whichever is smaller

Contract Name: Keep STEW DxP
Attachment G

PROJECT 001 – Leave Tree Marking

1. END RESULTS – DESCRIPTION OF WORK

   Project 001 marks leave trees within each Subdivision to meet the residual basal area and end results described in C2.355# – DESIGNATION BY PRESCRIPTION in the Contract.

2. PROJECT LOCATION

   The locations of the Subdivisions are shown on the Contract Area Map. This project work will be done within the boundaries of all Subdivisions of the Keep STEW DxP Contract.

3. PROJECT SPECIFICATIONS

   A. Table

Subdivision and Project Unit Number	Acres
81	6
83	4
102	27
107	72
109	19
110	99
113	10
152	14
170	43
171	37
172	8
173	93
195	49
196	9
198	6
Total	496

   B. Leave trees shall be Marked as specified in C2.355#.

   C. Tree Marking paint application:

      a. The color of the leave tree paint will be approved by the Forest Service per C6.842 (Option 1). Tree marking paint shall be provided and applied by the Contractor at their expense.

      b. The amount of paint applied should be of sufficient quantity to remain visible on marked trees after this contract has been completed.

      c. Trees shall be marked in such a manner that:

1) Paint is visible from all sides of tree bole at least 4.5 feet or higher above the stump, unless within 100 feet of an open road. Paint should not be visible within 100 feet of a trail as shown on the Contract Area Map.

2) Paint stump mark on the low side of the stump. Painted stump marks cannot be rubbed off if scraped and must be present and identifiable after the timber harvest operations in this contract.

d. Black paint will be required to delete unacceptable marking. Documentation is required for correcting Marked trees. When black paint is used to delete prior work the entire prior stump mark must be covered. Other deleted paint marks shall have black paint applied but the original color need not be totally blacked out.

4. OPERATION SCHEDULE

Subdivision	Operating Conditions	Purpose
152, 172, 173, 196	All operations will only be allowed between July 16 and February 28.	Northern Spotted Owl

5. CONTRACTOR'S OBLIGATIONS

The Contractor shall furnish materials, labor, supervision, transportation, and all supplies for this project.

6. PROSECUTION AND COMPLETION OF WORK

A. The Contractor shall be required to commence work under this contract after a pre-work meeting agreed upon by the Contractor and Forest Service and prosecute the work diligently.

B. The Marking of leave tree must be completed by the Contractor and accepted by the Forest Service prior to the start of felling operations in the Subdivision.

C. It is anticipated that adverse weather and/or road conditions may prevent access to the work sites or performance to specifications during certain periods of the year.

7. INSPECTION

A. The Contractor is to include in their Technical Proposal the process they will use for inspections, how often inspections be done, how the results will be documented, what the format of data collection will be, who will be responsible for the required paperwork and its submission to the Forest Service.

B. The Contractor shall take corrective action, if deemed necessary. Residual Basal Area should average +/- 10 square feet of the desired RBA, and shall not fall outside of +/- 20 square feet, unless listed as an exception in C2.355#.

8. MEASUREMENT AND CREDIT

Accepted work will be credited at the contract unit rate for the items shown in A4c.

PROJECT 002 – Reduce Fuel Loading

END RESULTS – Reduce the overall fuel loading of created and existing slash material to a desired 15 to 25 tons per acre.

1. DESCRIPTION OF WORK

This stewardship project requires services in Subdivisions/Project Units listed below for brush removal and slash treatment reducing fuel loading to 15 tons per acre in dry mixed conifer stands or 25 tons per acre in moist mixed conifer stands.

2. PROJECT LOCATION

3. PROJECT SPECIFICATIONS

A. Table

Subdivision or Project Unit	Acres	Fuels to Treat	Tons Per Acre
81	6	brush, conifer seedlings/saplings, and existing woody slash	25
83	4	brush, conifer seedlings/saplings, and existing woody slash	25
102	27	brush, conifer seedlings/saplings, and existing woody slash	25
107	72	brush, conifer seedlings/saplings, and existing woody slash	25
109	19	existing woody slash	15
110	99	brush, conifer seedlings/saplings, and existing woody slash	15
113	10	existing woody slash	15
152	14	existing woody slash	15
170	43	brush, conifer seedlings/saplings, and existing woody slash	15
171	37	brush, conifer seedlings/saplings, and existing woody slash	15
172	8	brush, conifer seedlings/saplings, and existing woody slash	15
173	93	brush, conifer seedlings/saplings, and existing woody slash	15
195	49	brush, conifer seedlings/saplings, and existing woody slash	15
196	9	brush, conifer seedlings/saplings, and existing woody slash	15
198	6	existing woody slash	25

Total: 496

B. Within Project Units if listed in the table cut all conifer seedlings/saplings under 4 feet tall, and all leafy hardwood brush over 12.0 inches in height. Herbaceous plants may be ignored. Stump heights within 660 feet of trail, as shown on Contract Area Map, will be 6 inches or less and 8 inches or less for other areas in the Project Units.

C. Treat all slash, as described in table above, to a fuel loading of 15 to 25 tons per acre. For the purposes of this project slash is defined as vegetative debris including, but not limited to, cull logs, blasted or pushed-out stumps, chunks, broken tops, limbs, branches, rotten wood, damaged or cut brush, damaged/cut/destroyed reproduction, saplings and poles, pre-existing or created by the activity. The process used shall not damage or kill existing leave trees.

D. If piling and covering is the approved disposal treatment, piling and covering specifications will be included at that time.

E. Burning by Contractor will not be approved.

F. Large down woody material 20 inches or greater at the small end diameter will not count towards the 15 to 25 tons per acre fuel loading target.

G. Impact to soils from Contractor’s Operations shall be less than 10 percent of the Subdivision/Project Unit area. Impact is defined as soils being exposed by the removal of the duff layer or displaced from one place to another as the result of Contractor’s Operations.

H. Not more than 5 percent of the residual stand may be damaged by Contractor’s Operations. Scarring of boles that exceed 16 square inches of cambium exposure will be considered damage. Any tree "root sprung" or with a broken top will also be considered damage.

4. OPERATION SCHEDULE

Subdivision	Operating Conditions	Purpose
152, 172, 173, 196	All operations will only be allowed between July 16 and February 28.	Northern Spotted Owl
All	All ground-based equipment operations will only be allowed between June 1 and October 31.	Soil Protection
All	Project operations restricted from Friday 12 P.M. through Monday 12 A.M. and on Federal holidays.	Public Safety

5. CONTRACTOR'S OBLIGATIONS

The Contractor shall furnish materials, labor, supervision, transportation, and all supplies for this project.

6. PROSECUTION AND COMPLETION OF WORK

A. The Contractor shall prosecute the work diligently, and complete the entire work no later than October 31, 2024. The time stated for completion shall include final cleanup of the premises.

B. It is anticipated that adverse weather and/or road conditions may prevent access to the work sites or performance to specifications during certain periods of the year.

7. INSPECTION

The Forest Service will periodically make visually inspections of the slash remaining on site with the fuel loading photo series, a copy of the fuel loading photo series will be available at the Hood River Ranger District. If the fuel loading appears to be within specification the work will be accepted on a completed subdivision.

8. MEASUREMENT AND CREDIT

Accepted work will earn stewardship credits upon completion of each project unit at the contract rate per unit of measure shown in A4c.