US006789417B2

(12) **United States Patent**
Luce

(10) **Patent No.: US 6,789,417 B2**
(45) **Date of Patent: Sep. 14, 2004**

(54) **METHOD FOR SENSING EVAPORATION OF A LIQUID**

(75) Inventor: **Charles H. Luce**, Boise, ID (US)

(73) Assignee: **The United States of America as represented by the Secretary of Agriculture**, Washington, DC (US)

(*) Notice: Subject to any disclaimer, the term of this patent is extended or adjusted under 35 U.S.C. 154(b) by 0 days.

(21) Appl. No.: **10/259,019**

(22) Filed: **Sep. 27, 2002**

(65) **Prior Publication Data**

US 2003/0046995 A1 Mar. 13, 2003

Related U.S. Application Data

(62) Division of application No. 09/637,031, filed on Aug. 10, 2001, now Pat. No. 6,490,917.

(51) **Int. Cl.**[7] **G01W 1/00**
(52) **U.S. Cl.** **73/170.16**; 73/170.22
(58) **Field of Search** ..... 73/170.16, 170.17, 73/170.18, 170.21, 170.22, 290 R, 305, 309, 322.5

(56) **References Cited**

U.S. PATENT DOCUMENTS

4,380,248	A	*	4/1983	Ambrus et al.	137/428
4,386,525	A	*	6/1983	Mooney	73/49.2
4,646,560	A	*	3/1987	Maresca et al.	73/49.2
4,839,590	A	*	6/1989	Koski et al.	324/207.21
4,852,054	A	*	7/1989	Mastandrea	702/51
5,156,042	A	*	10/1992	Carlin et al.	73/49.2
5,284,052	A	*	2/1994	Thompson	73/170.21

* cited by examiner

Primary Examiner—Eric S. McCall
(74) *Attorney, Agent, or Firm*—John D. Fado; Lesley Shaw; Janet I. Stockhausen

(57) **ABSTRACT**

A magnetostrictive precipitation gage includes a catch tube having an upper opening configured to receive precipitation therein. A vertical magnetostrictive rod and corresponding magnetic float linearly displaceable thereon are used to determine the fluid level within the catch tube. More particularly, as the fluid level fluctuates in the catch tube, so will the vertical position of the float, which interacts magnetically with the magnetostrictive rod. Accordingly, the vertical position of the float may be detected to determine the fluid level within the catch tube, and calculations regarding precipitation may be performed.

4 Claims, 3 Drawing Sheets

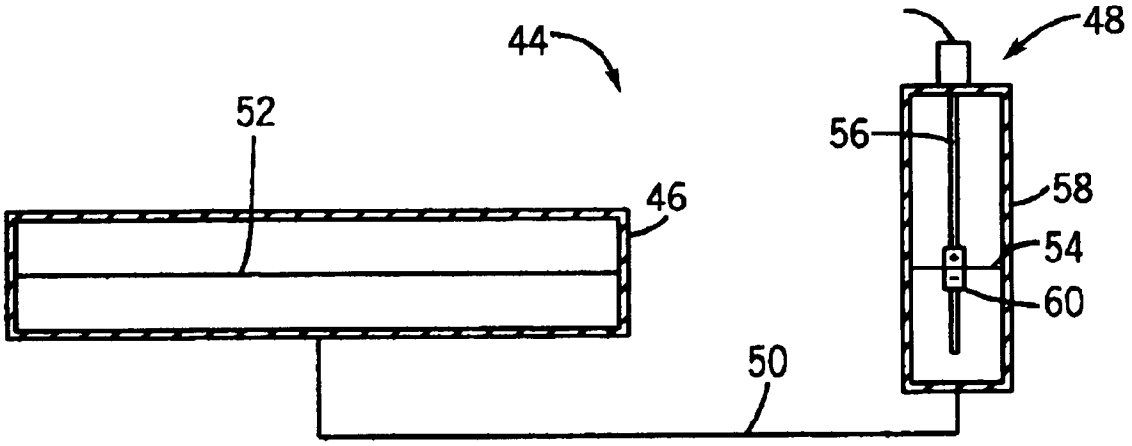

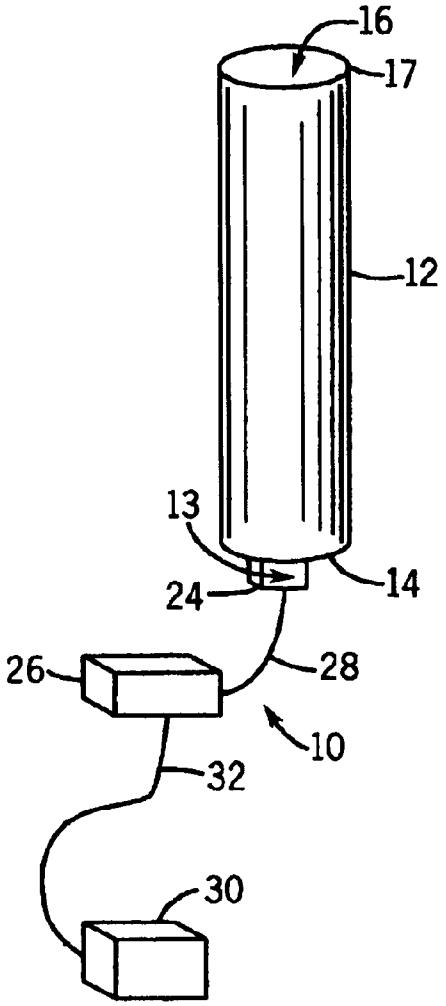

FIG. 1

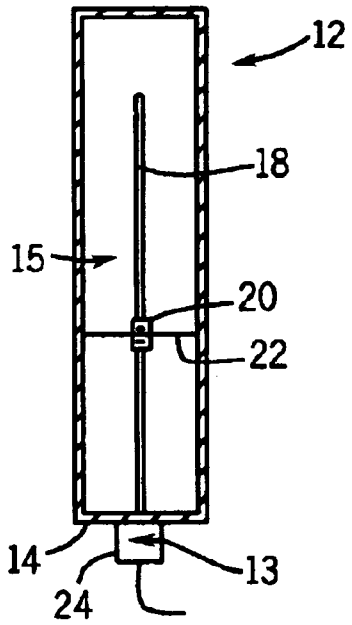

FIG. 2

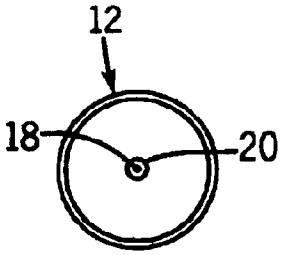

FIG. 3

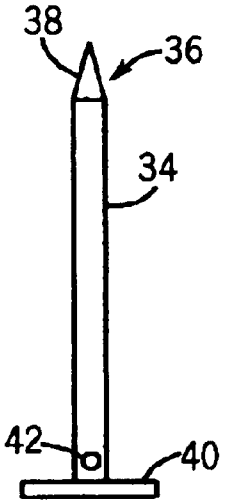

FIG. 4

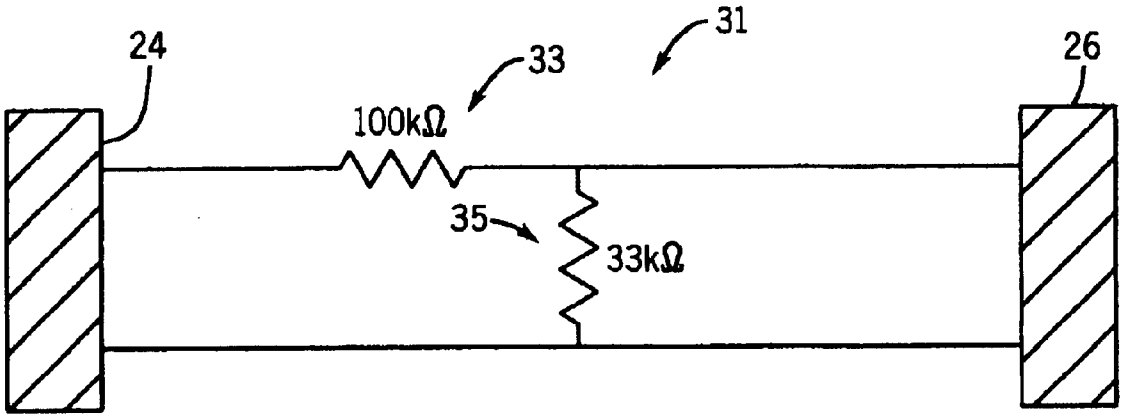

FIG. 5

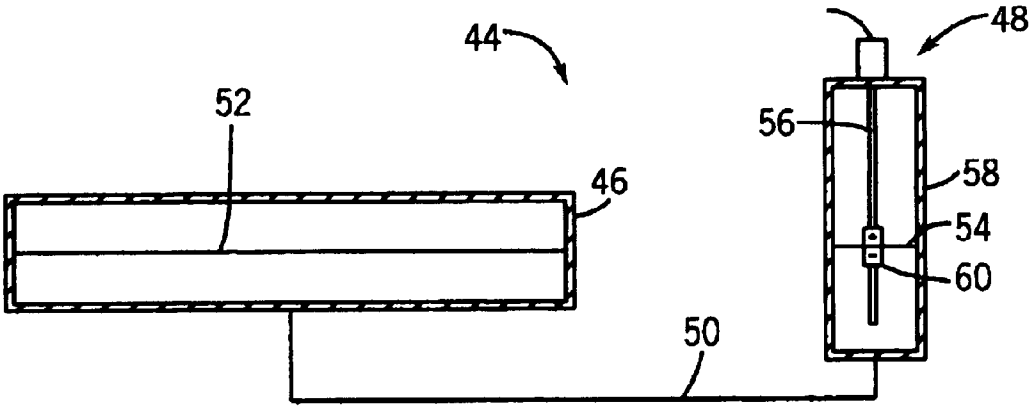

FIG. 6

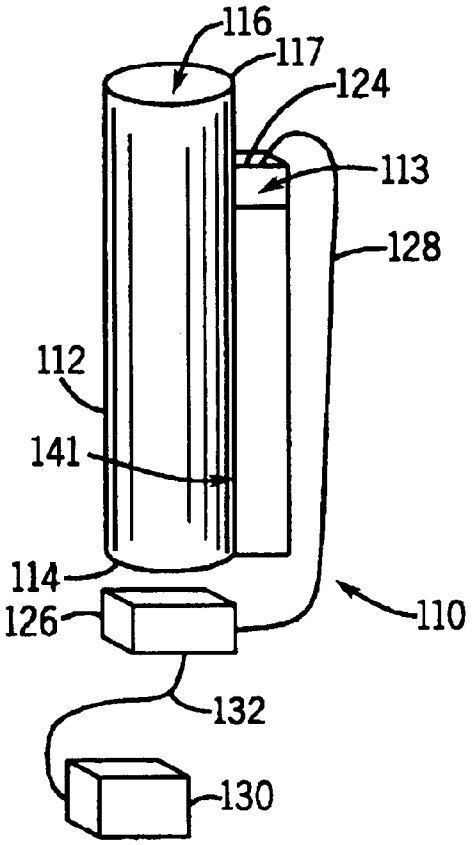

FIG. 7

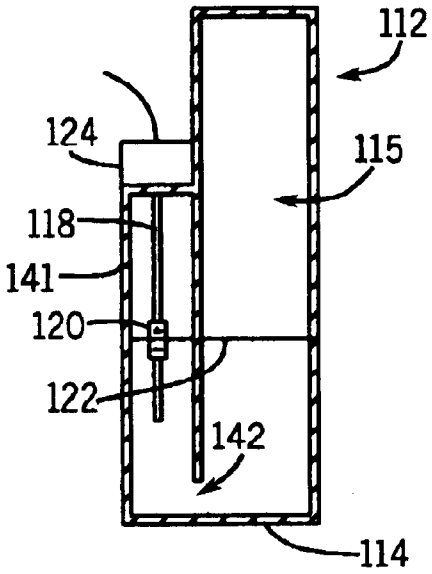

FIG. 8

FIG. 9

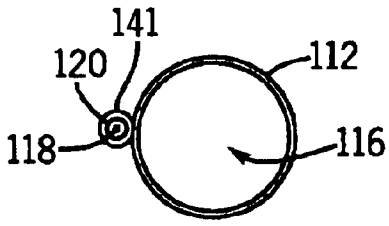

METHOD FOR SENSING EVAPORATION OF A LIQUID

This application is a divisional of U.S. application Ser. No. 09/637,031 filed Aug. 10, 2000, now U.S. Pat. No. 6,490,917, issued Dec. 10, 2002.

STATEMENT OF GOVERNMENT INTEREST

The invention described herein may be manufactured, used and licensed by or for the U.S. Government as represented by the Secretary for the United States Department of Agriculture.

BACKGROUND OF THE INVENTION

1. Field of the Invention

The present invention relates to precipitation gages and, more particularly, relates to a precipitation gage using a magnetostrictive transducer to measure precipitation levels.

2. Discussion of the Related Art

Precipitation gages are well known to include a generally cylindrical cavity having an upwardly facing opening configured to collect precipitation, such as rain or snow. Conventional precipitation gages typically include mechanical mechanisms that output signals indicative of the amount of precipitation within the cylinder. For instance, a precipitation gage may include a spring or other type of compressive element that is positioned at the bottom of the cylinder and compresses as precipitation accumulates within the cylinder. The amount of compression is thereby converted to the amount of precipitation based on the known spring constant.

Another precipitation gage currently used includes a pressure transducer that outputs signals corresponding to the amount of pressure sensed within the cylinder, which will change according to the amount of precipitation within the cylinder.

The amount of spring compression or, alternatively, the signals output by the pressure transducer are fed into a data manipulation system, which translates the signals into measured precipitation levels. Unfortunately, these precipitation gages are subject to fluctuations due to the wide variations in ambient temperature that occur throughout a given year, which affect the sensitivity of the spring constant, and additionally affect the ambient pressure which could thereby limit the effectiveness of a pressure transducer. Spring gages are additionally costly to manufacture.

What is therefore needed is a precipitation gage that is robust to temperature fluctuations, and that is relatively inexpensive to manufacture.

BRIEF SUMMARY OF THE INVENTION

In accordance with a first aspect of the invention, a magnetostrictive precipitation gage includes an elongated catch tube having an upwardly facing opening and a base and is configured to receive precipitation therein. A magnetostrictive transducer includes a rod extending upwardly from the base and a corresponding buoyant magnetized float that is linearly displaceable along the rod. Therefore, as precipitation accumulates within the catch tube, the rod senses the placement of the float and the magnetostrictive transducer outputs voltage signals to a data logger, which is configured to process the voltage signals and output data reflecting the precipitation levels over a given period of time.

These as well as other features and characteristics of the present invention will be apparent from the description

which follows. In the detailed description below, preferred embodiment of the invention will be described with reference to the accompanying drawings. These embodiments do not represent the full scope of the invention. Rather the invention may be employed in other embodiments. Reference should therefore be made to the claims herein for interpreting the breadth of the invention.

BRIEF DESCRIPTION OF THE DRAWINGS

Preferred exemplary embodiments of the invention are illustrated in the accompanying drawings in which like reference numerals represent like parts throughout, and in which:

FIG. **1** is a perspective view of a precipitation gage in accordance with one embodiment of the present invention;

FIG. **2** is a sectional side elevation view of the precipitation gage of FIG. **1**;

FIG. **3** is a top plan view of the precipitation gage of FIG. **1**;

FIG. **4** is a rod cover that may optionally be used in combination with the precipitation gage of FIG. **1**;

FIG. **5** illustrates a schematic circuit usable in combination with the data collection circuitry in accordance with the precipitation gage of FIG. **1**;

FIG. **6** is a schematic view of an evaporation pan gage employing a magnetostrictive transducer in accordance with the preferred embodiment;

FIG. **7** is a perspective view of a precipitation gage in accordance with another embodiment of the present invention;

FIG. **8** is a sectional side elevation view of the precipitation gage of FIG. **7**; and

FIG. **9** is a top plan view of the precipitation gage of FIG. **7**.

DETAILED DESCRIPTION OF THE INVENTION

Referring initially to FIGS. **1–3**, a precipitation gage **10** includes an elongated cylindrical catch tube **12** having a bottom wall **14** and defining an inner cavity **15** having an upper opening **16**. The upper walls **17** of the catch tube **12** are beveled so as to prevent the accumulation of snow on the catch tube, which could result in the accumulation of inaccurate precipitation levels within the catch tube **12**. The diameter of the catch tube is preferably between 6 and 12 inches, and is uniform throughout the tube so as to provide accurate measurements of precipitation. The upper walls **17** of the catch tube **12** are beveled so as to prevent the accumulation of snow on the catch tube, which could result in the accumulation of inaccurate precipitation levels within the catch tube **12**. The catch tube **12** may be made of a plastic, metal, fiberglass, or any other material suitable for collecting precipitation. A larger diameter of catch tube **12** is preferable so as to provide a greater sampling area for the precipitation gage **10**. In operation, it is desirable to partially fill the catch tube **12** with antifreeze initially so that as precipitation falls, it melts, thereby increasing the accuracy of the precipitation gage **10**. The antifreeze also prevents fluid already in the gage from freezing. As precipitation accumulates, the antifreeze will become dilute, so the initial charge of antifreeze should be sufficiently deep so as to provide adequate protection as the catch tube **12** fills. A surface coating of oil on the top of the fluid in the catch tube **12** prevents evaporation of the fluid.

The precipitation gage **10** includes a magnetostrictive transducer **13** having a generally cylindrical rod **18** extend-

ing upwardly from the bottom wall **14**. The upper walls **17** of the catch tube **12** are beveled so as to prevent the accumulation of snow on the catch tube, which could result in the accumulation of inaccurate precipitation levels within the catch tube **12**. Preferably, the rod **18** has a length of one foot to provide high precision in measurement, or can be up to two or three feet long for gages where considerable precipitation is expected with infrequent maintenance. It should be appreciated that a shorter rod **18**, while providing for greater accuracy, would necessitate emptying of the precipitation gage **10** at more frequent intervals. It has been determined that the precision of a gage **10** having a one-foot rod is approximately 0.005 inches using a commonly available data logger **26**.

A float **20** is mounted on the rod **18** for sliding displacement therealong, and contains a generally circular magnet therein. As a result, as the fluid level **22** lowers and rises within the catch tube **12**, the float **20** will be displaced up and down accordingly. The rod **18** includes a magnetostrictive wire extending from the tip of the rod **18** through the bottom wall **14** and into a magnetostrictive transducer head **24**. The head **24** may be protected by the ambient environment by providing a housing that is attached to the outside of bottom wall **14** so as to encapsulate the head. For the sake of convenience and clarity, the combination of the housing and magnetostrictive transducer head will hereinafter referred to as the head **24**. The head **24** encloses electronics for use in combination with magnetostrictive wires enclosed within the rod **18** to produce a voltage output indicating the location of the float **20** with reference to the rod **18**. The magnetostrictive transducer is powered by a power supply **30** via electrical wire **32**. It has been determined that a relatively accurate and linear response may be obtained using a 12-volt power supply. One such magnetostrictive transducer is described in more detail in U.S. Pat. No. 4,839,590, the disclosure of which is hereby incorporated by reference. It should be appreciated, however, that alternative magnetostrictive transducer designs exist, and the present invention is not intended to be limited to the configuration described above.

With continuing reference to FIG. **1**, a data logger is connected to the magnetostrictive transducer head **24** via an electrical wire **28** that inputs varying voltage signals corresponding to the fluid level **22**, as indicated by the interaction between rod **18** and float **20**, from the head **24**. The data logger includes electronic circuitry to compute and output statistical information regarding precipitation levels that are experienced over a given period of time. While the catch tube **12** is illustrated as being generally cylindrical in accordance with the preferred embodiment, it should be appreciated that the tube may be of any other suitable configuration, for example, rectangular. Accordingly, the catch tube **12** is not intended to be limited to cylindrical structures.

Conventional magnetostrictive transducers may output voltages ranging from zero to 10 volts, while conventional data loggers are capable of reading up to 2.5 volts, and sometimes up to 5 volts. Accordingly, referring now to FIG. **5**, the electrical connection **28** includes a voltage splitter **30**, which reduces the relatively high voltage output from housing **24** to acceptable values that are processed by the data logger **26**. Specifically, the voltage splitter **30** includes a resistor **32** that is connected in series with a resistor **34** and data logger **26**. One having skill in the art will recognize that the voltage drop in this configuration will equal the resistance of resistor **34** divided by the sum of resistances of resistors **32** and **34**. Accordingly in the illustrated embodiment, a ten voltage output from the head **24** will input to the data-logger **26** as 10*(33/133)=2.5 volts. It should further be appreciated that if resistor **32** was modified to include a resistance of 33 kilo-ohms, the resulting input to the data logger would equal 5 volts.

It should be recognized that the voltage splitter **31** described above may not be necessary in configurations wherein the magnetostrictive transducer outputs voltage values that are acceptable to the data logger and that alternative voltage splitter configurations may be necessary so as to accommodate various data loggers.

Referring to FIG. **4**, a rod cover **36** includes a generally cylindrical pipe **34** having a conical top **38** and is hollow so as to fit over the magnetostrictive rod **18**. The diameter of the cover **36** is sufficiently large so as to fit over the float **20**. The cover **36** is particularly useful during deep snowfall events, where a danger exists that the float **20** could become covered by snow, thereby preventing an accurate response, which could render the precipitation gage **10** inoperative for a substantial period of time. The cover **36** further includes a base plate **40** to provide support to the cover when it is mounted within the catch tube **12**. One or more holes **42** extending through the pipe **34** near the bottom so as to permit precipitation entering the catch tube **12** to travel within the pipe, thereby activating the floater **20**.

Referring now to FIG. **6**, an evaporation sensor **44** includes an evaporation pan **46** that is in fluid communication with a fluid reservoir **48**. Specifically, an elongated pipe **50** extends from the base of the evaporation pan **46** to the base of the fluid reservoir **48** and allows fluid within the fluid reservoir **48** to travel into the evaporation pan **46**. In operation, therefore, a known relationship exists between a decrease in fluid level **52** within evaporation pan **46**, and the corresponding decrease of the fluid level **54** within fluid reservoir **48**. The relationship depends largely on the diameter of the evaporation pan **46** with respect to that of the fluid reservoir **48**, as is understood to one having ordinary skill in the art. The fluid reservoir **48** operates in a similar manner with the precipitation gage as described in FIG. **1**. However, the rod **56** is suspended from the top of the catch tube **58** and has a float **60** that will lower as the fluid level **54** lowers, thereby providing a relationship between the evaporation rate and the fluid level **52**. Accordingly, the data logger **26** will provide data relating to the evaporation rate over a given period of time.

Referring now to FIGS. **7–9**, a precipitation gage **110** in accordance with another embodiment is illustrated having reference numerals corresponding to similar parts of the precipitation gage **10** of FIGS. **1–3** incremented by one hundred. In particular, the precipitation gage **110** includes an elongated cylindrical magnetostrictive tube **140** disposed adjacent and connected to the catch tube **112** by one of any known suitable methods. A magnetostrictive transducer head **124** is disposed on top of the tube **140**, and is connected to a magnetostrictive rod **118** that extends downwardly therefrom and includes a float **120**, which operates as described above. An aperture **142** exists at the bottom between the tubes **112** and **140** to permit fluid entering the catch tube to flow into the magnetostrictive tube **140** to facilitate measurement of the fluid level **122**. The magnetostrictive tube **140** may be clear with having a fluid level sight gage to allow a user to obtain visual readings of the fluid level **122**.

The embodiment illustrated in FIGS. **7–9** allows increased ease of maintenance by allowing access to the precipitation gage **110** from above the fluid level **122**, thereby eliminating the need to drain the gage prior to

maintenance. A stop may exist on the bottom of the rod to allow retrieval of the float **120** when the rod **118** is removed during, for example, rod replacement. It is furthermore recognized that the accuracy of the precipitation measurements is increased as the opening **116** of the precipitation gage **110** approaches ground level. Accordingly it is desirable to bury a significant portion of the precipitation gage **110**. Because the magnetostrictive head **124** is positioned on top of the tube **140**, the gage **110** may be buried while allowing access to the electronics for maintenance purposes. It should be appreciated, in this embodiment, that the diameter of the magnetostrictive tube **140** is preferably minimized to increase accuracy the correlation between the fluid level **122** detected in the magnetostrictive tube **141** and that in the catch tube.

The invention has been described in connection with what are presently considered to be the most practical and preferred embodiments. However, the present invention has been presented by way of illustration and is not intended to be limited to the disclosed embodiments. Accordingly, those skilled in the art will realize that the invention is intended to encompass all modifications and alternative arrangements included within the spirit and scope of the invention, as set forth by the appended claims.

What is claimed is:

1. A method for sensing evaporation of a fluid within an evaporation pan that is in fluid communication with a fluid gage including an elongated container enclosing a magnetostrictive transducer having a magnetostrictive rod extending vertically in the container and a buoyant magnetized float that is movable linearly from a first position along the rod as a fluid level in the container decreases, the method comprising the steps of:

a) evaporating a quantity of fluid from the evaporation pan;

b) decreasing the fluid level in the container an amount proportional to the evaporated fluid, wherein the container is located remotely from the evaporation pan;

c) vertically displacing-said float along the rod to a second position in response to the decrease in fluid level;

d) after step C, determining the second position of the float with respect to the rod based on a magnetic interaction between the float and the rod; and

e) determining an amount of fluid evaporated from said evaporation pan based directly on the second position of the float.

2. The method as recited in claim **1**, wherein step (e) further comprises determining a relationship between the difference of the first and second position, and the amount of fluid reduced in the container.

3. The method as recited in claim **2**, further comprising determining a relationship between the amount of fluid reduced in the container, and the amount of fluid evaporated in the evaporation pan.

4. The method as recited in claim **1**, wherein the evaporation pan and container are in fluid communication via a conduit, and wherein step (a) further comprises transferring fluid from the container to the evaporation pan.

* * * * *