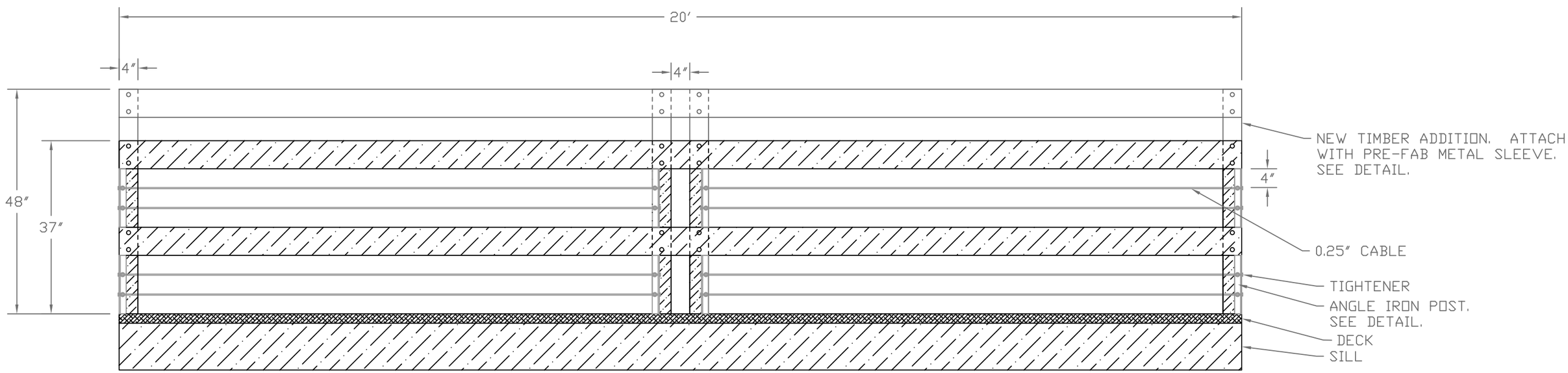

EAST CATWALK ELEVATION

DRAFT

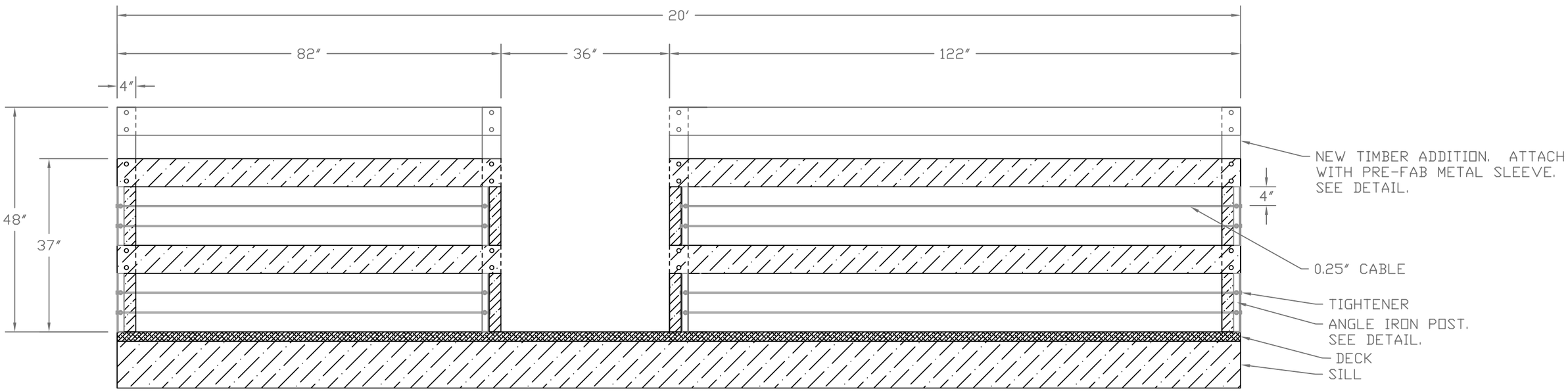

SOUTH CATWALK ELEVATION

DRAFT

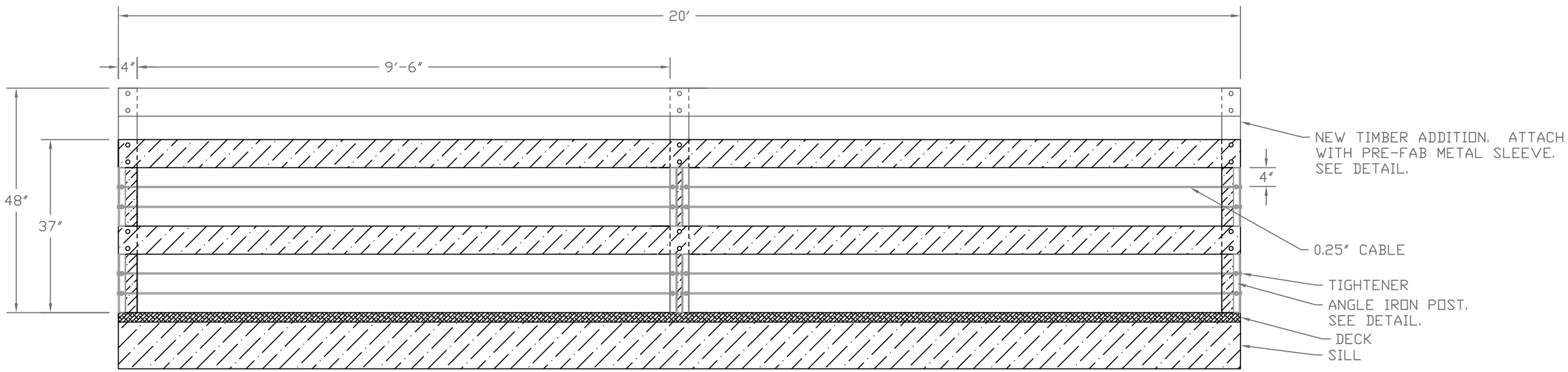

NORTH AND WEST CATWALK ELEVATION

DRAFT