NATIONAL FOREST TIMBER FOR SALE

CHEQUAMEGON/NICOLET NATIONAL FOREST

The Garden PL Sale is located within Compartments 364 and 365, Bayfield County, WI, T43N, R6W, Sections 22, 23, 27, 26, 34 and 35. The Forest Service will receive sealed bids in public at Glidden Ranger District Office at 11:00 AM local time on 05/06/2014 for an estimated volume of 64 CCF of Mixed Hardwood sawtimber, 367 CCF of Oak sawtimber, 117 CCF of Sugar Maple sawtimber, 890 CCF of Aspen pulpwood, 68 CCF of Mixed Conifer pulpwood, 3677 CCF of Mixed Hardwood pulpwood, and 880 CCF of Oak pulpwood marked or otherwise designated for cutting. In addition, there is within the sale area an unestimated volume of Aspen Submerch grn bio cv, Conifer Submerch grn bio cv, and Hardwood Submerch grn bio cv that the bidder may agree to remove at a fixed rate. The Forest Service reserves the right to reject any and all bids. Interested parties may obtain a prospectus from the office listed below. A prospectus, bid form, and complete information concerning the timber, the conditions of sale, and submission of bids is available to the public from the The Great Divide Ranger District, Glidden office (715-264-2511). A full prospectus can also be found on the Chequamegon-Nicolet National Forest website at http://www.fs.usda.gov/resources/cnnf/landmanagement/resourcemanagement. The USDA is an equal opportunity provider and employer.

United States Department of Agriculture
Forest Service Chequamegon/Nicolet Great Divide Ranger District
PO Box 126
Glidden, Wisconsin 54527

Reply to: 2430
Date: 04/02/2014

Dear Prospective Bidder:

On 05/06/2014, at 11:00 AM, sealed bids will be opened in the Glidden Ranger District Office for the Garden PL sale. This sale is located in Compartments 364 and 365, Bayfield County, WI, T43N, R6W, Sections 22, 23, 27, 26, 34 and 35. Timber sale Contract 2400-6T will be used. The termination date for this sale is 06/30/2018.

The estimated quantities in this contract have been determined prior to felling. The total estimated quantity on this sale is 6,063 CCF. The Forest Service encourages potential bidders to make their own inspection and estimate prior to bid submission. The Forest Service makes no representation, warranty, or guarantee of the accuracy of the following quantity estimates:

Estimated Quantities and Rates per Unit of Measure

Species	Product	Unit of Measure	Estimated Quantities	Average DBH	Advertised Rates	Base Rates	Required Deposits: Slash Disposal	Required Deposits: Road Maintenance
Mixed Hardwood	Sawtimber	CCF	64.00	13.70	$35.92	$18.73	$0.00	$0.38
Oak	Sawtimber	CCF	367.00	13.30	$36.88	$19.64	$0.00	$0.38
Sugar Maple	Sawtimber	CCF	117.00	13.90	$48.35	$25.27	$0.00	$0.38
Aspen	Pulpwood	CCF	890.00	11.60	$28.30	$14.41	$0.00	$0.38
Mixed Conifer	Pulpwood	CCF	68.00	6.90	$11.01	$5.92	$0.00	$0.38
Mixed Hardwood	Pulpwood	CCF	3,677.00	7.70	$14.29	$7.53	$0.00	$0.38
Oak	Pulpwood	CCF	880.00	9.50	$14.76	$7.76	$0.00	$0.38
	Total	CCF	6,063.00				$0.00	$2,303.94

There is a $11,300.00 bid guarantee required on this sale.

If you wish further information on this sale, the prospectus and bid form, please write or call the Great Divide Ranger District, Glidden office (715-264-2511). A full prospectus can also be found on the Chequamegon-Nicolet National Forest website at http://www.fs.usda.gov/resources/cnnf/landmanagement/resourcemanagement.

Sincerely,

DANIEL EKLUND
District Ranger

Enclosure

SALE AREA MAP

Garden PL Timber Sale Contract
Great Divide Ranger District
Chequamegon-Nicolet National Forest
T43N, R6W, Sections 22,23,26,27,34,35
Scale: 4 inch = 1 mile (1:15,840)
03/24/2014 AM Sheet 1 of 1

0 0.125 0.25 0.5 Miles

N

Sale Area Boundary, BT1.1
Waterbody
Payment Unit Boundary, BT1.1
Non-Forest Service Ownership
Payment Unit Number, BT1.1
Wetlands Protection, BT6.5
Protect Known Survey Monuments, BT6.23
Existing Transportation System, BT5.1
Existing Road, Hauling Restricted, CT5.12
KO Keep Trail Open, BT6.22 Snowmobile Trail
KO(1) Keep Trail Open, BT6.22 BikeTrail, Single Track
KO(2) Keep Trail Open, BT6.22 BikeTrail, TwoTrack
PI Protect Improvements, BT6.22
Traffic Control Device, BT6.33

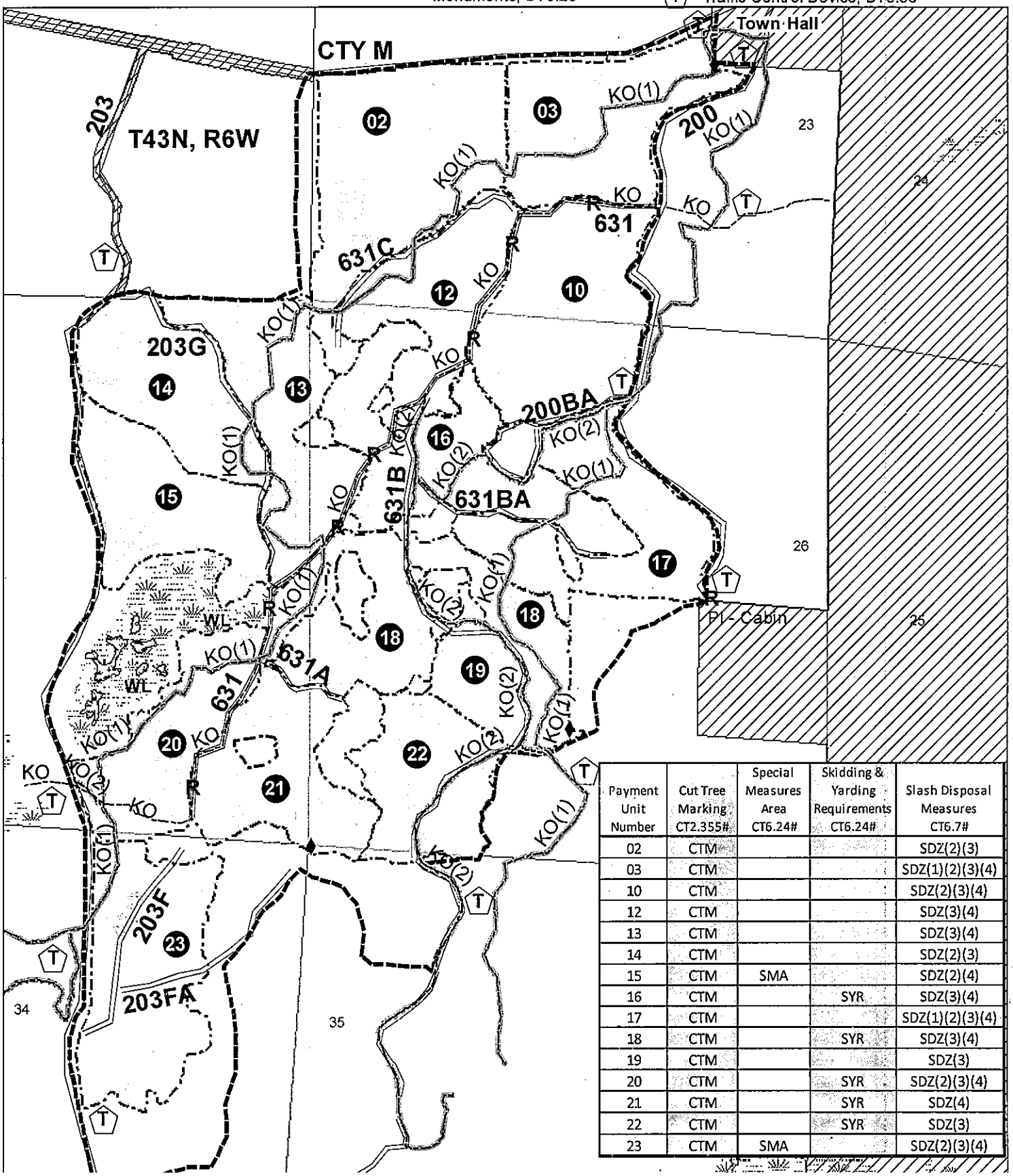

Payment Unit Number	Cut Tree Marking CT2.355#	Special Measures Area CT6.24#	Skidding & Yarding Requirements CT6.24#	Slash Disposal Measures CT6.7#
02	CTM			SDZ(2)(3)
03	CTM			SDZ(1)(2)(3)(4)
10	CTM			SDZ(2)(3)(4)
12	CTM			SDZ(3)(4)
13	CTM			SDZ(3)(4)
14	CTM			SDZ(2)(3)
15	CTM	SMA		SDZ(2)(4)
16	CTM		SYR	SDZ(3)(4)
17	CTM			SDZ(1)(2)(3)(4)
18	CTM		SYR	SDZ(3)(4)
19	CTM			SDZ(3)
20	CTM		SYR	SDZ(2)(3)(4)
21	CTM		SYR	SDZ(4)
22	CTM		SYR	SDZ(3)
23	CTM	SMA		SDZ(2)(3)(4)

TIMBER SALE PROSPECTUS

Sale Name :	Garden PL	**Type of Sale :**	Premeasured
National Forest :	Chequamegon/Nicolet	**Ranger District :**	Great Divide
Bidding Method :	Sealed Bid	**Bid Guarantee :**	$11,300.00

Location of Bid Opening : Glidden Ranger District Office

Date : 05/06/2014 **Time :** 11:00 AM

1. INTRODUCTION. This prospectus furnishes prospective bidders with information not contained in the published advertisement and is designed to enable bidders to decide whether or not to further investigate the sale. The prospectus is not a legally binding document, but is offered to provide general information about a sale. The contract does not include descriptions, estimates, and other data in this prospectus, unless otherwise stated. In the event that the prospectus contains an error or contradicts the sample contract, the contract governs. Bidders are urged to examine the timber sale and make their own estimates. Timber sale Contract 2400-6T will be used. Inspect the sale area and the sample contract before submitting a bid. Obtain the appraisal, other information on the timber, and conditions of sale and bidding at Forest Service offices listed above and in the named attached advertisement.

2. BIDDING. This is a Sealed Bid sale. Bidders must submit sealed bids on prepared forms they can obtain from Forest Service offices listed above and in the attached advertisement. The forms include instructions for bidding and submission of the required certifications. A bid guarantee must be included with the bid in the form of cash, a bid bond on form FS-6500-13 (4/82) or later, certification of annual bid bond allocation on form FS-6500-13a (4/82) or later, an irrevocable letter of credit, a certified check, bank draft, cashiers check, official bank check, or bank or postal money order payable to the Forest Service, USDA in the amount specified above and in the bid form. The bid guarantee shall be returned to each bidder whose bid is not accepted.

3. LOCATION AND DESCRIPTION OF TIMBER. Refer to the sample contract and sale area map attached to the sample contract for legal location of sale area, location of payment units, location of cutting units, the acreage of sale area, and the cutting unit acreage.

THE FOLLOWING GENERAL LOCATION, ROUTES OF ACCESS, ACREAGES, AND OTHER SPECIAL LOCATION DATA DO NOT SUPERSEDE THE SALE AREA MAP OR SAMPLE CONTRACT.

Sale is located 25 miles west of Glidden, WI, approximately 2 miles south of County Highway M. Most Payment Units are accessible via existing roads requiring some maintenance work. Some Payment Units are accessed via Snowmobile Trail 631 that will require maintenance.

Total Sale Area is estimated at 1165 acres, with cutting area estimate at 841 acres.

Payment Units 02, 03, 10, 12, 13, 14, 15, 17, 19, 23 are 575 acres of hardwood thinning.

Payment Units 16, 18, 20, 21, 22 are 266 acres of oak shelterwood.

"Mixed Confier" Pulp consists mostly of Balsam Fir, with some White Spruce.

"Mixed Hardwood" Sawtimber consists mostly of Red Maple and Basswood, with lesser amounts of White Ash.

"Mixed Hardwood" Pulpwood consists mostly of Sugar Maple, Red Maple, and Paper Birch, with lesser amounts of Basswood and White Ash.

Refer to Section 20 of this prospectus for further information regarding the contract specifications.

4. TIMBER QUANTITIES AND RATES. The quality, size, cut per acre, and product suitability of the timber are estimates based on detailed cruise information on file and available for inspection at the Forest Service offices listed above and in the advertisement. VOLUME QUANTITIES LISTED HEREIN ARE MADE AVAILABLE WITH THE UNDERSTANDING THAT VALUES SHOWN ARE FOREST SERVICE ESTIMATES AND ARE NOT GUARANTEED. For these reasons, bidders are urged to examine the timber sale area and make their own estimates.

THE MINIMUM ACCEPTABLE BID RATE IS STATED IN THE ATTACHED BID FORM. THESE RATES ARE EFFECTIVE AT THE TIME OF ADVERTISEMENT.

Estimated Quantities and Rates per Unit of Measure

							Required Deposits	
Species	Product	Unit of Measure	Estimated Quantities	Average DBH	Advertised Rates	Base Rates	Slash Disposal	Road Maintenance
Mixed Hardwood	Sawtimber	CCF	64.00	13.7	$35.92	$18.73	$0.00	$0.38
Oak	Sawtimber	CCF	367.00	13.3	$36.88	$19.64	$0.00	$0.38
Sugar Maple	Sawtimber	CCF	117.00	13.9	$48.35	$25.27	$0.00	$0.38
Aspen	Pulpwood	CCF	890.00	11.6	$28.30	$14.41	$0.00	$0.38
Mixed Conifer	Pulpwood	CCF	68.00	6.9	$11.01	$5.92	$0.00	$0.38
Mixed Hardwood	Pulpwood	CCF	3,677.00	7.7	$14.29	$7.53	$0.00	$0.38
Oak	Pulpwood	CCF	880.00	9.5	$14.76	$7.76	$0.00	$0.38
	TOTAL	CCF	6,063.00				$0.00	$2,303.94

Timber Subject to Agreement

Species	Product	Unit of Measure	Fixed Rates	Slash Disposal Deposits	Road Maintenance Deposits
Aspen Submerch	Grn Bio Cv	CCF		$0.00	$0.38
Conifer Submerch	Grn Bio Cv	CCF		$0.00	$0.38
Hardwood Submerch	Grn Bio Cv	CCF		$0.00	$0.38

Estimated Knutson-Vandenberg deposit for sale area improvement work in a total amount of $57,558.00 is included in total timber value.

5. PERIOD OF CONTRACT. The normal operating season covers the period between 01/01 and 12/31. Contract termination date is 06/30/2018. Extensions of this contract may be granted only when the purchaser has met specified conditions.

If an appeal or lawsuit is filed challenging the decision to award this contract or upon determination by the Regional Forester that conditions existing on this timber sale are the same as, or nearly the same as, conditions existing on other timber sale(s) in appeal or litigation, Contracting Officer may delay award or reject all bids. If delay in award is for 30 days or more during Normal Operating Season after bid opening, Contracting Officer shall, upon award, adjust the contract term to include additional calendar days in one or more Normal Operating Seasons equal to the time award is delayed during Normal Operating Season.

The purchaser must submit a Plan of Operations to the Contracting Officer for approval before operations begin or within 60 days of sale award, whichever is earlier. The plan must show how the purchaser plans to complete the contract by the termination date. In addition to the Plan of Operations, the purchaser must submit an annual Operating Schedule before commencing operations. This schedule will

include the anticipated major activities and needs for harvest. This annual Operating Schedule does not require concurrence of the Forest Service.

6. PAYMENT. Payment for timber and any required deposits for slash disposal or road maintenance are required in advance of cutting. The Purchaser may transfer purchaser credit into the contract, or provide an acceptable payment guarantee prior to cutting. Payment for required deposits must be a cash payment. The purchaser shall make advance deposits in accordance with provision B(T)4.212 - Advance Deposits.

The high bidder whose bid is accepted shall, at the time the contract is signed and returned by the bidder, make a downpayment pursuant to Title 36, Section 223.49, of the Code of Federal Regulations. The Contracting Officer will notify the high bidder of the amount necessary to make this payment. In no case shall the downpayment be less than 10 percent of the total advertised value plus 20 percent of the bid premium. After receipt of the downpayment and a satisfactory performance bond and upon execution of the timber sale contract, the Forest Service will return the bid guarantee. A cash bid guarantee may be applied to the downpayment at the request of the purchaser. The purchaser cannot apply the amount deposited as a downpayment to cover other obligations due on the sale until conditions stated in the contract for release of downpayment have been met. Refer to the sample contract for the specific conditions.

By the midpoint between award date and the termination date, the purchaser shall have paid for, or in lieu thereof, deposited cash in the greater amount of: (1) 50 percent of the total estimated bid premium, or (2) 35 percent of the total estimated sale value at bid date, exclusive of required deposits, rounded up to the next $100.

By the midpoint of the last normal operating season, or 12 months from the initial periodic payment, whichever date is first, the purchaser shall have paid for, or in lieu thereof, deposited cash in the amount of 75 percent of the total estimated sale value at bid date, exclusive of required deposits, rounded up to the next $100.

7. PERFORMANCE BOND. A performance bond is required. The penal sum of the bond will be 10 percent of the total bid value of the sale, rounded up to the nearest $100 when the total bid value is $10,000 or less; and rounded up to the nearest $1,000 when the total bid value exceeds $10,000 or $12,000.00 whichever is greater. If an irrevocable letter of credit is used to secure the performance bond, the termination of the letter of credit must be at least 6 months past the contract termination date.

8. SPECIFIED ROADS. Not Applicable.

9. ROAD MAINTENANCE. Purchaser shall perform or pay for road maintenance work, commensurate with purchaser's use, on roads controlled by Forest Service, and used by purchaser in connection with this sale. Road maintenance requirements are based on the predicted haul route. Any change in the purchaser's actual haul route may necessitate a change in the roads to be maintained and/or in the amount of required deposit for road maintenance. Required deposits for road maintenance are listed in Section 4 and in the sample contract. Maintenance specifications are in the sample contract.

10. INAPPLICABLE STANDARD PROVISIONS. See sample contract.

11. SPECIAL PROVISIONS. See sample contract.

12. SET-ASIDE SALES. Not Applicable.

13. LOG EXPORT AND SUBSTITUTION RESTRICTIONS. Not Applicable.

14. EQUAL EMPLOYMENT OPPORTUNITY COMPLIANCE REVIEW. If the total bid value plus required deposits for this contract exceeds $10 million, before award, the Forest Service shall request an equal employment opportunity compliance review of the high bidder to determine compliance with the provisions of Executive Order 11246 of September 24, 1965, as amended by Executive Order 11375 of October 13, 1967 and Executive Order No. 12086 of October 5, 1978.

15. AWARD. The Contracting Officer is required to make a determination of bidder responsibility as stated in Title 36, Section 223.101, of the Code of Federal Regulations.

To determine a purchaser to be responsible, a Contracting Officer must find that:

a. The purchaser has adequate financial resources to perform the contract or the ability to obtain them;

b. The purchaser is able to perform the contract within the contract term taking into consideration all existing contracts and Governmental business commitments;

c. The purchaser has a satisfactory performance record on timber sale contracts. A prospective purchaser that is or recently has been seriously deficient in contract performance shall be presumed not to be responsible, unless the Contracting Officer determines that the circumstances were beyond the purchaser's control and were not created through improper actions by the purchaser or affiliate, or that the purchaser has taken appropriate corrective action. Past failure to apply sufficient tenacity and perseverance to perform acceptably under a contract is strong evidence that a purchaser is not a responsible contractor. The Contracting Officer shall consider the number of contracts involved and extent of deficiency of each in making this evaluation;

d. The purchaser has a satisfactory record of integrity and business ethics;

e. The purchaser has or is able to obtain equipment and supplies suitable for logging the timber and for meeting the resource protection provisions of the contract;

f. The purchaser is otherwise qualified and eligible to receive an award under applicable laws and regulations.

Bidders, by signing the bid form, certify that, to the best of bidder's knowledge the bidder will meet the requirements in 36 CFR 223.101, determination of purchaser responsibility, and, if awarded this contract, that bidder will complete the timber sale contract and any modifications thereof in accordance with its terms including requirements to purchase, cut, and remove included timber.

16. FALSE STATEMENTS ACT. Bidders, by signing the bid form, certify that they are aware that bidder is subject to the penalties prescribed in 18 U.S.C. 1001, Chapter 47, Fraud and False Statements (P.L. 104-45). The Act states "whoever, in any matter within the jurisdiction of any department or agency of the United States knowingly and willfully falsifies, conceals or covers up by any trick, scheme, or device a material fact, or makes any false, fictitious or fraudulent statements or representations, or makes or uses any false writing or document knowing the same to contain any false, fictitious or fraudulent statement or entry, shall be fined under this title or imprisoned not more than 5 years, or both."

17. DAMAGES. This contract shall be terminated for breach pursuant to paragraph 16, 19, and/or 21 of the bid form and the terms of the sample contract if: 1) bidder fails to execute a timber sale contract, furnish a downpayment, or furnish a satisfactory performance bond within 30 days of the award letter's date; or 2) bidder is found to have violated the False Statements Act in making any statement or certification on the bid form including not meeting purchaser responsibility requirements, and bidder has made a false statement. The bid guarantee shall be retained, in whole or in part, by the Forest Service to satisfy any damages that may be assessed.

18. SUSPENSION AND DEBARMENT CERTIFICATION. Non-procurement debarments and suspensions are governed by the Government-wide common rules (7 CFR 3017).

These rules require each timber sale purchaser, to submit a certification for itself, its principals, and its affiliates when bidding on sales. The bidder must designate its status regarding debarment, suspension, and other matters as specified on the bid form. The bidder, by signing the bid form, certifies this status. An explanation for not submitting a certification may be submitted. The Contracting Officer will determine whether the explanation provides sufficient reason for permitting participation in the bidding. Also, as a timber sale purchaser enters into transactions with subcontractors, these subcontractors must certify their eligibility. The certification titled "Subcontractor Certification Regarding Debarment, Suspension, Ineligibility, and Voluntary Exclusion" must be provided to subcontractors, but completed certifications are not required to be submitted with bid forms. Purchaser must keep these subcontractor certification forms on file for review by the Forest Service, if requested.

The certification forms and instructions for subcontractor transactions are provided as an addendum to the bid form.

19. OCCUPATIONAL SAFETY AND HEALTH ADMINISTRATION (OSHA) LOGGING REGULATIONS. Conduct of operations on this timber sale is subject to inspection for compliance with the logging operations regulations at 29 CFR 1910.266 by OSHA. This standard is applicable to the entire logging industry wherever logging operations occur. Information is available to assist purchasers to ensure compliance with the logging operations regulations during conduct of this timber sale from the U.S. Department of Labor, Occupational Safety and Health Administration, OSHA, 1648 Tri Park Way Appleton, WI 54914, 920-734-4521.

20. GENERAL.

AT2 VOLUME ESTIMATION AND UTILIZATION STANDARDS
Volume estimates were made from timber cruising that occurred between July and November 2013. Hardwood Sawtimber volume estimates are the result of two slightly different cruising specifications for Hardwood Sawtimber. Eight foot sections cruised as Hardwood Sawtimber products with a small end DIB (Diameter Inside Bark) between 9.6" and 11.5" had a net scale in percent of gross scale of at least 95% (i.e. were considered to be at least 95% sound). Eight foot sections cruised as Hardwood Sawtimber products with small end DIB over 11.5" DIB had a net scale in percent of gross scale of at least 50%. Estimated sawtimber volumes can be converted to estimated MBF volumes by multiplying by .54. Estimated pulpwood volumes can be converted to estimated MBF volumes by mulitplying by .633.

AT6 HIGH STUMPS
Maximum Stump Heights shall be no more than 12 inches, measured from the high side of the stump.

AT12 TERMINATION DATE
Termination date is set for June 30, 2018.

AT13 NORMAL OPERATING SEASON
Normal Operating Season is January 01 to December 31.

AT17 MARKET RELATED CONTRACT TERM ADDITION PRODUCER PRICE INDEX
The Producer Price Index is the Wood Chips Index. This index was established to reflect expected marketing of a majority of the priducts on this sale. Purchaser may request, prior to contract execution, the use of a different available index, (Softwood Lumber or Hardwood Lumber Index) through a written request justifying why the change is being requested. This request will be forwarded to, and considered by, the Forest Supervisor for approval. If agreed upon, the change will become part of the executed contract. The index may not be changed once the contract has been executed.

BT6.81 PRODUCT IDENTIFICATION
This provision is not applicable to this contract and will be waived in writing by the Contracting Officer at the time of award.

CT2.355# INDIVIDUAL TREES, CUT TREE MARKING
See attached table.

CT5.103# APPROACHES TO SURFACE ROADS
Purchaser shall apply and maintain 6 inches of pit run gravel on all Temporary Road approaches for a distance of 100 feet back from the surfaced road. Surfaced roads include those with any crushed rock or pavement surface. This requirement may be waived by the Forest Service if Temporary Road is used only during frozen ground conditions. An appraisal adjustment has been made for anticipated temporary road work to be performed by the Purchaser.

CT5.12# USE OF ROADS BY PURCHASER
See attached table.

CT5.31# ROAD MAINTENANCE REQUIREMENTS
See attached. An appraisal adjustment has been made for estimated road maintenance work to be performed by the Purchaser.

CT5.32# ROAD MAINTENANCE DEPOSIT SCHEDULE
The required deposits for Forest Service work in lieu of Purchaser Performance and for deferred maintenance on Forest Roads 203 and 200 will be .38 per CCF.

CT6.24# SITE SPECIFIC SPECIAL PROTECTION MEASURES
Payment Unit(s) requiring special measures are identified on Sale Area Map with an "SMA" label. Forest Service will identify exact locations requiring protection prior to the start of Purchaser's operations within or near Payment Unit(s).

CT6.314# CUTTING SCHEDULE
Only four Payment Units may be released at one time, and the sequence of cutting Payment Units shall be at the option of the Purchaser.

CT6.314# OPERATING REQUIREMENTS

Purchaser's use of paint within Sale Area must be requested in writing and approved by the Contracting Officer.

Purchaser's operations within Payment Units 16, 18, 20, 21, and 22 are restricted to Oct 1-Apr 15 due to Oak Wilt concerns. Purchaser's operations in all other Payment Units are restricted to when soils are capable of adequately supporting equipment operations. Evidence of rutting, compaction, or erosion will be determining factors for not allowing or halting operations. Operations occurring during non-frozen conditions will require that no equipment be operated within 15 feet of any woodland pond.

Purchaser's operations that result in high levels of ground disturbance may require revegatation efforts on behalf of the Purchaser to establish acceptable erosion control. Location and timing of revegatation will be directed by the Forest Service to establish an acceptable grass or legume cover. Grass or legume seed, as well as any lime or fertilizer will need to be approved by the Forest Service in advance of application.

Operations within 150 feet of any bike trail is restricted to December 01 through March 14. Use of single track bike trails will be limited to trail crossings, and use of crossings will only be allowed December 01 through March 14 of any given year. Crossings will be minimized, and must only occur at right angles to the trail at locations approved prior to use by the Sale Administrator. The Purchaser must install and maintain safety signs on both sides of each active crossing, at locations agreed upon with the Sale Administrator. Two track bike trails may be used for access, forwarding, and decking, but only between December 01 and March 14. Any slash resulting from Purchasers operations must be immediately removed from all bike trail corridors. At a minimum, bike trail corridors will be maintained in the condition they were in prior to the Purchaser's use.

The portion of the snowmobile trail in Payment Unit 21 which is not on an existing system road will have the requirements that are listed for Forest Road 631 under CT5.12#.

Hauling of timber on Forest Service roads, including temporary roads, during times when load restrictions are in place for local county roads, requires Forest Service approval.

If biomass harvesting is requested by purchaser and approved by Forest Service, a minimum of 1 tree top for every 10 trees harvested will be left on site, and left in an evenly-distributed manner across the unit, except in Payment Units 16, 18, 20, and 22 where whole-tree skidding is required.

CT6.42# SKIDDING AND YARDING REQUIREMENTS
Within Payment Units 16, 18, 20, 21, and 22, trees designated for cutting will be whole-tree skidded to approved landings, to accomodate regeneration needs. Landing locations will need to take slash disposal requirements, specified in provision CT6.7#, into consideration

The following are applicable across the entire Sale Area:

Skid trails and decking locations should avoid areas known to be infested with non-native plant species.

Skid trails that access open system roads shall be rendered inaccessible to vehicle traffic. This may require scattering of slash and stumps and/or placement of berms.

Landings will not be located within the road template, including the ditch line and back slope of Forest Roads 200 and 203.

CT6.63# TEMPORARY ROAD CLOSURE
All Temporary Roads will be rendered inaccessible to all motorized traffic, including all-terrain vehicle. Effectively preventing motorized use may require a ditch, berm and/or piling slash/stumps within roadway for up to 300 feet.

CT6.7# SLASH DISPOSAL MEASURES
SDZ(1)
Slash resulting from Purchaser's operations that lies within 10 feet from Non-USFS lands shall be removed and scattered within Payment Unit boundaries.

SDZ(2)
Slash resulting from Purchaser's operations that lies within 10 feet of the cleared right-of-way (i.e. tree line) of Highway M and Forest Roads 200 & 203 shall be removed and scattered within Payment Unit boundaries. Within an adjacent 90 feet, slash shall lie no more than 2 feet above ground.

SDZ(3)
Slash resulting from Purchaser's operations within 150 feet from the cleared right-of-way (i.e. tree line) of the bike trails shall lie no more than 2 feet above ground. Any slash generated upon the trail shall be immediately removed.

SDZ(4)
Slash resulting from Purchaser's operations that lies within 10 feet for the cleared right-of-way (i.e. tree line) of the snowmobile trail shall be removed and scattered with Payment Unit boundaries. Within an adjacent 90 feet slash shall lie no more than 3 feet above ground.

CT5.12# USE OF ROADS BY PURCHASER
See Restricted Road List (attached).

Corporations submitting an offer under this solicitation must include form AD-3030-FS Representations Regarding Felony Conviction and Tax Delinquent Status for Corporate Applicants.

PROSPECTUS ATTACHMENT

Sale Name: Garden PL

INDIVIDUAL TREES, CUT TREE MARKING, CT2.355#

see also STUMP MARKS, CT6.412

Payment Unit(s)	Paint Color
02	Blue
03	Blue
10	Blue
12	Blue
13	Blue
14	Blue
15	Blue
16	Blue
17	Blue
18	Blue
19	Blue
20	Blue
21	Blue
22	Blue
23	Blue

PROSPECTUS ATTACHMENT

Sale Name : Garden PL

Use of Roads by Purchaser, CT5.12#

Restricted Road List Table

Road Number	Road Name	Termini		Map Legend	Description of Restrictions
		From	To		
631	631	FR 200	FR 203	R	Due to the road corridor also serving as a snowmobile trail: (1) Safety signs must be installed prior to the start of operations at locations approved by the Forest Service. (2) No operations are allowed during the Forest Supervisor's spring trail closure period. During times when snowmobile trails are open or being groomed: (3) Operations along or immediately adjacent to road corridor are not allowed during weekends, defined as noon on Fridays through midnight on Sundays, or during the daylight hours of December 24, 25, 31 or January 01 of any given year. (4) A minimum of 4" of compacted snow must be maintained on road corridor at all times. (5) Decking is not allowed on or near curves where sight distance for snowmobile trail users is limited. (6) Any slash resulting from operations will be **immediately** removed. At a minimum, road corridor must be maintained and restored to the condition it is was in prior to use.
200	200	N/A	N/A	R	Purchaser must obtain written permission from landowner, and provide written permission to Forest Service, before using any portion or road not on Forest Service lands.

PROSPECTUS ATTACHMENT

ROAD MAINTENANCE REQUIREMENTS

Garden PL **CT5.31# Special Provisions**

SECTION 3. ROAD MAINTENANCE REQUIREMENTS SCHEDULE

Contract Road Maintenance Requirements Summary

Road	Termini		Miles	Applicable Prehaul Road Maintenance Specifications									
	From	To		T8110	T8130	T8420							
200BA	200	End	0.5	P	P	P							
203F	200	End	0.4	P	P	P							
203FA	203F	End	0.2	P		P							
203G	203	End	0.7	P	P	P							
631	200	End	1.8	P	P	P							
631A	631	End	0.2	P		P							
631B	631	End	1.3	P		P							
631BA	631B	End	0.4	P		P							
631C	631	End	0.5	P		P							

P = Purchaser Performance Item, D = Deposit to Forest Service, D3 = Deposit to Third Party

Road	Termini		Miles	Applicable During Haul Road Maintenance Specifications									
	From	To		T8110									
200BA	200	End	0.5	P									
203F	200	End	0.4	P									
203FA	203F	End	0.2	P									
203G	203	End	0.7	P									
631	200	End	1.8	P									
631A	631	End	0.2	P									
631B	631	End	1.3	P									
631BA	631B	End	0.4	P									
631C	631	End	0.5	P									

P = Purchaser Performance Item, D = Deposit to Forest Service, D3 = Deposit to Third Party

Road	Termini		Miles	Applicable Post Haul Road Maintenance Specifications									
	From	To		T8110	T8620								
200BA	200	End	0.5	P									
203F	200	End	0.4	P									
203FA	203F	End	0.2	P									
203G	203	End	0.7	P	P								
631	200	End	1.8	P									
631A	631	End	0.2	P									
631B	631	End	1.3	P									
631BA	631B	End	0.4	P	P								
631C	631	End	0.5	P	P								

P = Purchaser Performance Item, D = Deposit to Forest Service, D3 = Deposit to Third Party

SECTION 4. ROAD MAINTENANCE SPECIFICATIONS

INCLUDED SPECIFICATIONS

Specification No.	Specification Title
T-8110	Maintenance Blading/Grading
T-8130	Spot Surface Course Placement/Replenishment
T-8420	Cutting Roadway Vegetation
T-8620	Miscellaneous Maintenance

PROSPECTUS ATTACHMENT

ROAD MAINTENANCE REQUIREMENTS

Garden PL **CT5.31# Special Provisions**

T-8110 Maintenance Blading/Grading

DESCRIPTION

1.1 Maintenance Blading/Grading is keeping an aggregate surfaced Roadbed in a condition to facilitate traffic and provide proper drainage. It includes maintaining the Crown, Inslope or Outslope of the Traveled Way, Turnouts, and Shoulder; repairing Berms; blending approach road intersections; and cleaning Drainage Dips and Lead-off Ditches.

EQUIPMENT

2.1 The equipment required to shape, spread, and compact surfacing is listed below.

Road Number	Road Termini - From	Road Termini - To	Equipment Description
200BA	200	End	Dozer, Grader or other equipment approved by Forest Service.
203F	200	End	
203FA	203F	End	
203G	203	End	
631	200	End	
631A	631	End	
631B	631	End	
631BA	631B	End	
631C	631	End	

REQUIREMENTS

3.1 Maintenance Blading/Grading shall be performed to facilitate traffic and proper drainage before, during, or after Purchaser's use as required by Section 3. Road Maintenance Requirements Schedule.

3.2 The surface blading shall preserve the existing cross-section. Surface irregularities shall be eliminated and the surface left in a smooth, free-draining state needed to facilitate traffic. Surface Course Material which has been displaced to the Shoulders or Turnouts shall be returned to the Traveled Way. The blading operation shall be conducted to conserve Surface Material and to provide for a thorough mixing of the Material being worked.

3.3 On aggregate surfaced roads Material generated from back slope Sloughing and ditch cleaning shall not be blended with Surface or Base Course Material unless agreed otherwise

3.4 Roadway back slopes shall not be undercut.

3.5 Drainage Dips and Lead-off Ditches shall be cleaned and maintained to retain the existing line, grade, and cross-section.

3.1 Intersecting roads shall be bladed for a distance of 50 feet to assure blending of the surfaces.

3.2 Rocks or other Material remaining on the Traveled Way after the final pass that are 4 inches in diameter or larger shall be removed. The unsuitable Material shall be disposed of by side casting unless agreed otherwise. Side casting into streams, lakes, or water courses will not be permitted.

3.3 Material resulting from this activity shall not remain on or in structures, such as Culverts, cattle guards, ditches, bridges, and Drainage Dips.

3.4 Material resulting from this activity, plus any accumulated debris, shall be removed from roadway structures, such as concrete low-water crossings or fords.

PROSPECTUS ATTACHMENT

ROAD MAINTENANCE REQUIREMENTS

Garden PL **CT5.31# Special Provisions**

T-8130 Spot Surface Course Placement/Replenishment

DESCRIPTION

1.1 Spot Surface Course Placement/Replenishment includes Subgrade preparation, furnishing, hauling, spreading and shaping materials in accordance with the requirements.

MATERIALS

2.1 Surface Course Material will be in accordance with the subsection 3.2 of these specifications. Only commercial sources of aggregate will be accepted, except surfacing material may also be purchased from the government, where available, by filling out a form 2600, paying the required fees, and obtaining a permit.

REQUIREMENTS

3.1 Subgrade Preparation. Prepare Subgrade to receive Surface Course Material at locations as designated on-the-ground by the Forest Service on roads listed below. Prepare the Subgrade by shaping the Roadbed to approximately the original cross-section and consistent with adjacent sections.

3.2 Furnish, haul and spread Material at locations designated on the ground by the Forest Service (FS). Compact the aggregate by operating spreading and hauling equipment over the full width of each layer of the aggregate, or by other methods as specified below.

Road Number	Type Material	Finished Compacted Thickness Specified	Total Quantity (Tons or cu.yds.)	Compaction Method
200BA	Pit Run Borrow	6 inches	30 cu.yds. at intersection of 200	N/A
203F			50 cu.yds. at various locations	
203G			30 cu.yds. at intersection of 203	
631			150 cu.yds. at various locations	

3.3 Variations. The Purchaser will be required to furnish weight tickets to the FS for each load of commercially obtained crushed aggregate prior to the final inspection. For aggregate purchased from the government, a count of truck loads will be required in addition to finished depth checks for the placed and compacted aggregate. Widths and lengths will be as staked or from schedule. When it is mutually agreed that all or part of the Surface Course Material is not needed, the estimated cost of surfacing not placed shall be charged to the Timber Sale Account in accordance with BT8.31.

PROSPECTUS ATTACHMENT

ROAD MAINTENANCE REQUIREMENTS

Garden PL **CT5.31# Special Provisions**

T-8420 Cutting Roadway Vegetation

DESCRIPTION

1.1 This work includes removal of brush, trees and other vegetative growth from within the clearing limits. This may include brush mowing of shoulders to prevent larger growth which would inhibit travel in the future.

EQUIPMENT

2.2 Equipment use may include farm tractor mounted mowing or brushing equipment. If brushing equipment is required it must be of a size and power to cut off and masticate stems up to four inches in diameter. Larger growth may require hand clearing with a chainsaw or mechanized equipment able to handle larger trees.

REQUIREMENTS

3.1 Vegetative matter within the Roadway which impedes vehicular travel, and/or interferes with road maintenance operations, such as surface blading and ditch and culvert cleaning shall be removed. Downed timber meeting utilization standards shall be cut in appropriate lengths and decked in locations where agreed upon and the Traveled Way or sight distances will not be impaired.

3.2 Vegetative matter removed from the clearing limits shall be scattered outside the clearing limits at least _6_ feet perpendicular to the road surface.

3.3 Trim tree branches that extend over the road surface and shoulders to attain a clear height of 14 feet. Trim branches flush with the tree or as close as possible without causing damage or scarring to the bole. Area shall be left neatly trimmed.

3.4 Any stump removed shall be placed in an upright position out of the clearing limits.

3.5 Area shall not be left in an unsightly condition. The FSR shall have the final say over how the area is left.

PROSPECTUS ATTACHMENT

ROAD MAINTENANCE REQUIREMENTS

Garden PL **CT5.31# Special Provisions**

T-8620 Miscellaneous Maintenance

DESCRIPTION

1.1 Maintenance of miscellaneous structures includes cattle guards, gates (this includes all types of closure devices such as logs, rocks, dirt berms, dirt and slash berms, metal gates, etc), signs, and other similar structures that have been previously installed to insure safe and efficient operation of the road.

MATERIALS

2.1 Any Materials needed in the maintenance of miscellaneous structures shall be similar in type and quality to the Material in the structure being maintained.

REQUIREMENTS

3.1 Cattle guards. Loose rails shall be welded or bolted back in place.
Excess Material carried into the cattle guard shall be removed when drainage is blocked or when it reaches six inches from the bottom of the cattle guard frame. Drainage into and from the cattle guard shall be kept open.

3.2 Gates (and other closure devices). Gates shall be kept in good repair and made to swing easily. Hinges or latches shall be repaired if not operating properly. Brush and debris shall be removed from within the swinging radius. Weathered berms or wood piles shall be reconstructed to a height which discourages use and blocks the road.

3.3 Signs. Any signs needing repair or replacement shall be installed per sign placement detail or MUTCD direction. All roads shall have legible sign numbers. ML 3-5 roads shall have horizontal numbering and ML 1-2 roads shall have vertical numbers. The material used shall be as directed by the Forest Service Representative. All new signs must meet retroreflectivity requirements.

Road Number	Road Name	Location	Remove/Install	Type of Item	Size	Quantity
203G	203G	Intersection with 200	Install	Gate*	N/A	1
631C	631C	Intersection with 631	Install	Gate*	N/A	1
631BA	631BA	Intersection with two-track bike trail	Install	Gate*	N/A	1

*Furnished by Purchaser; Specifications Attached

PROSPECTUS ATTACHMENT

ROAD MAINTENANCE REQUIREMENTS

Garden PL **CT5.31# Special Provisions**

T-8620 **Miscellaneous Maintenance (continued)**

Gate Specifications, page 1 of 8

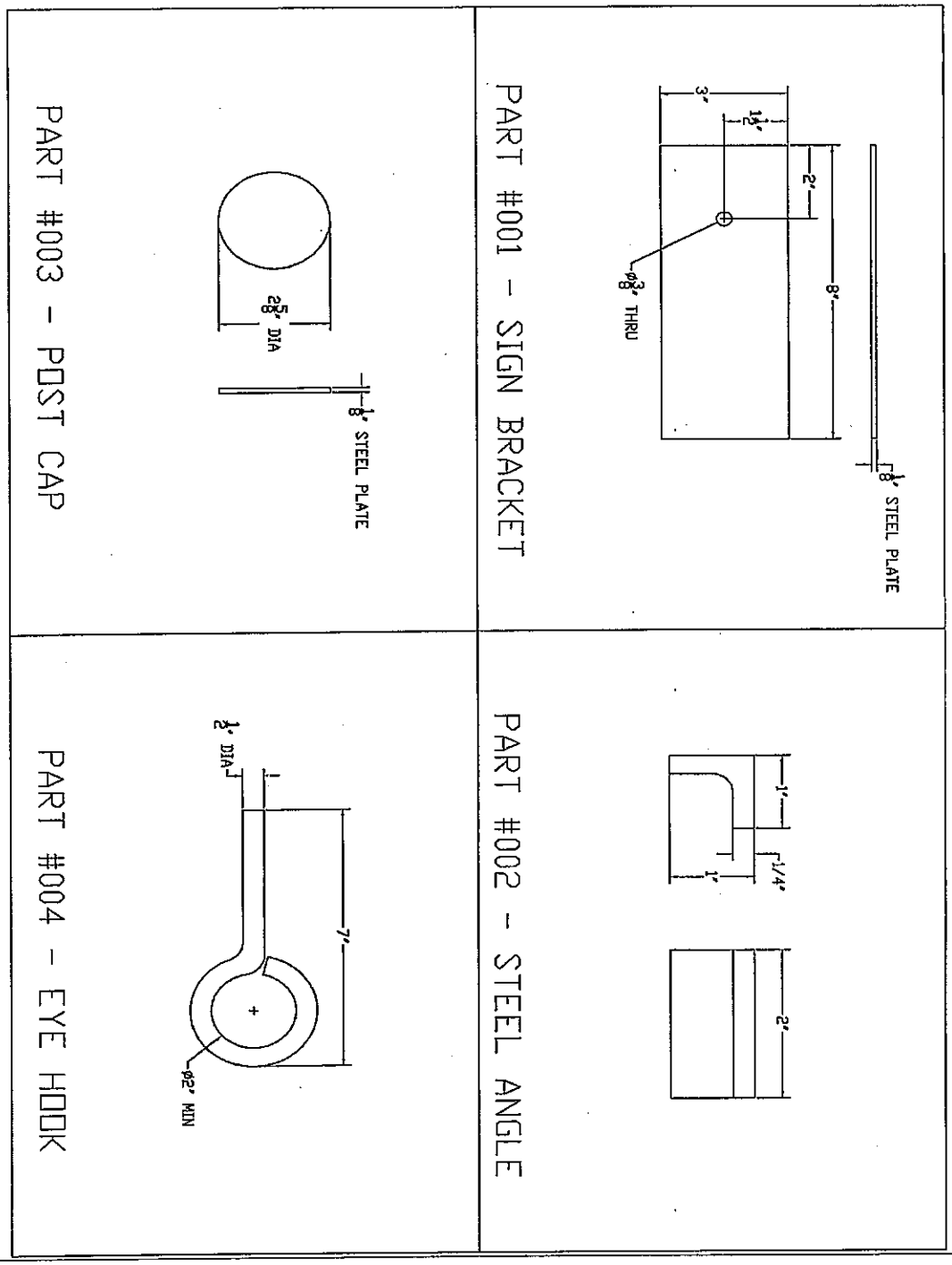

PROSPECTUS ATTACHMENT

ROAD MAINTENANCE REQUIREMENTS

Garden PL **CT5.31# Special Provisions**

T-8620 **Miscellaneous Maintenance (continued)**

Gate Specifications, page 2 of 8

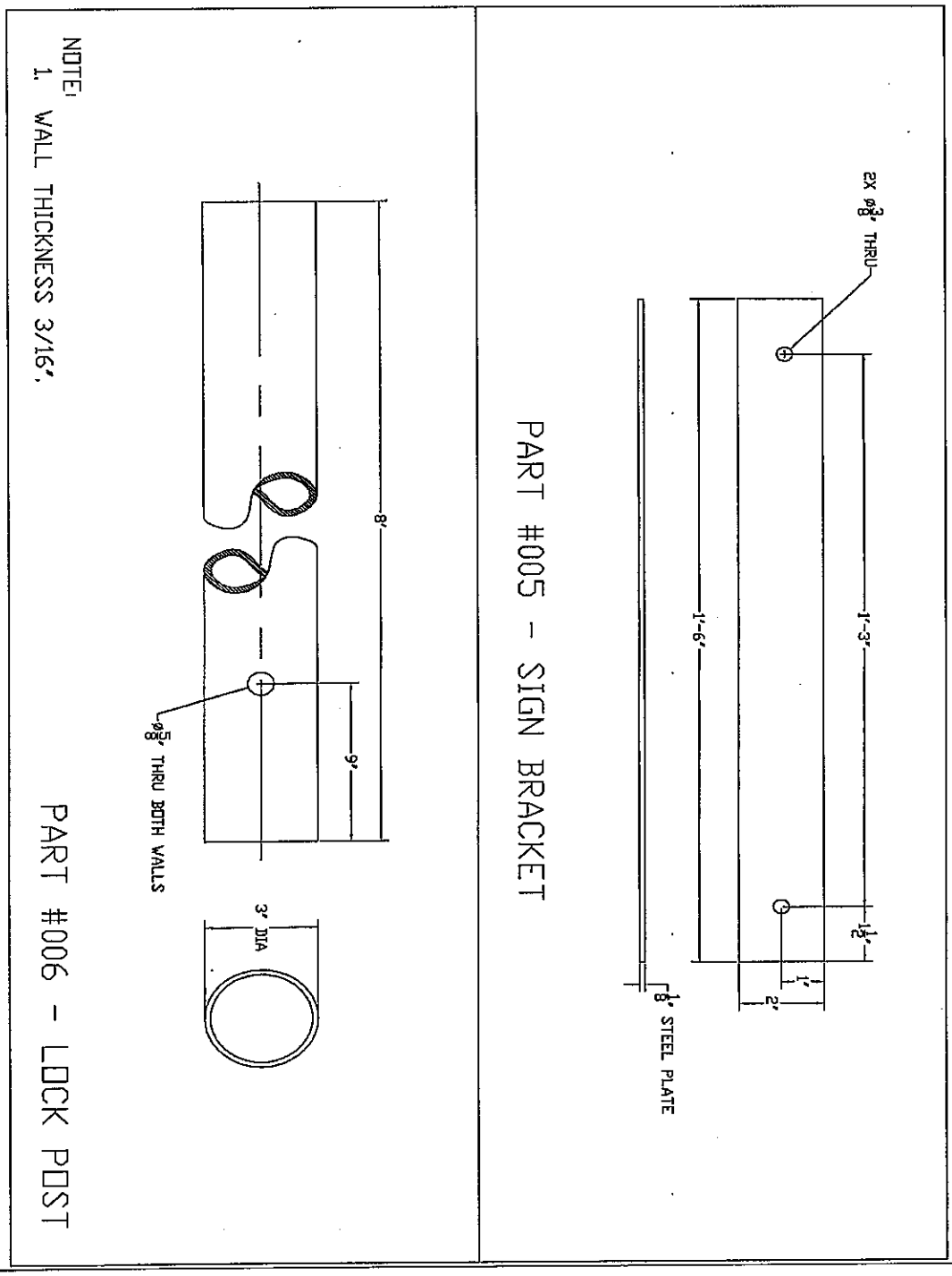

T-8620 **Miscellaneous Maintenance (continued)**

Gate Specifications, page 3 of 8

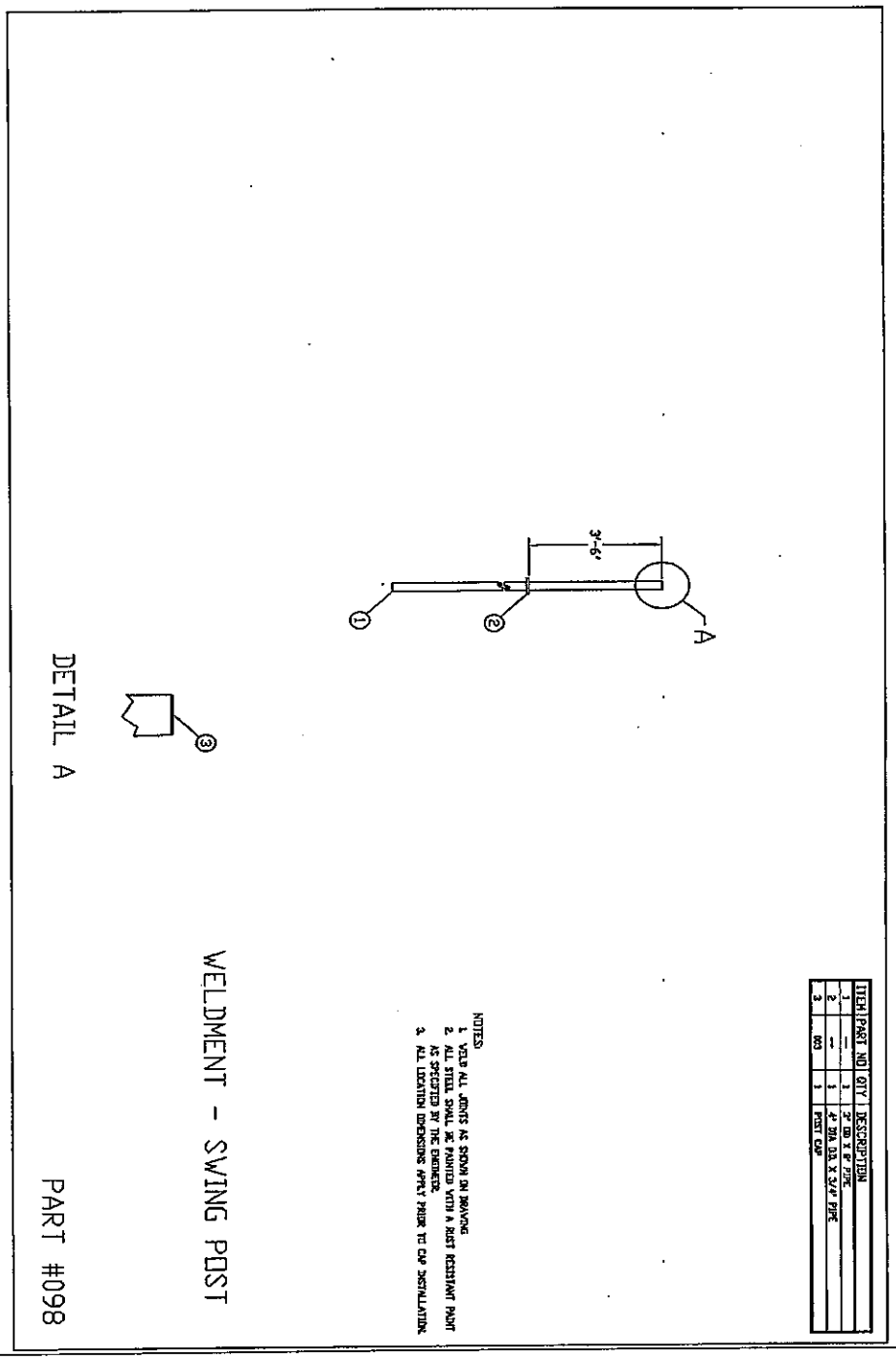

ROAD MAINTENANCE REQUIREMENTS

Garden PL **CT5.31# Special Provisions**

T-8620 **Miscellaneous Maintenance (continued)**

Gate Specifications, page 4 of 8

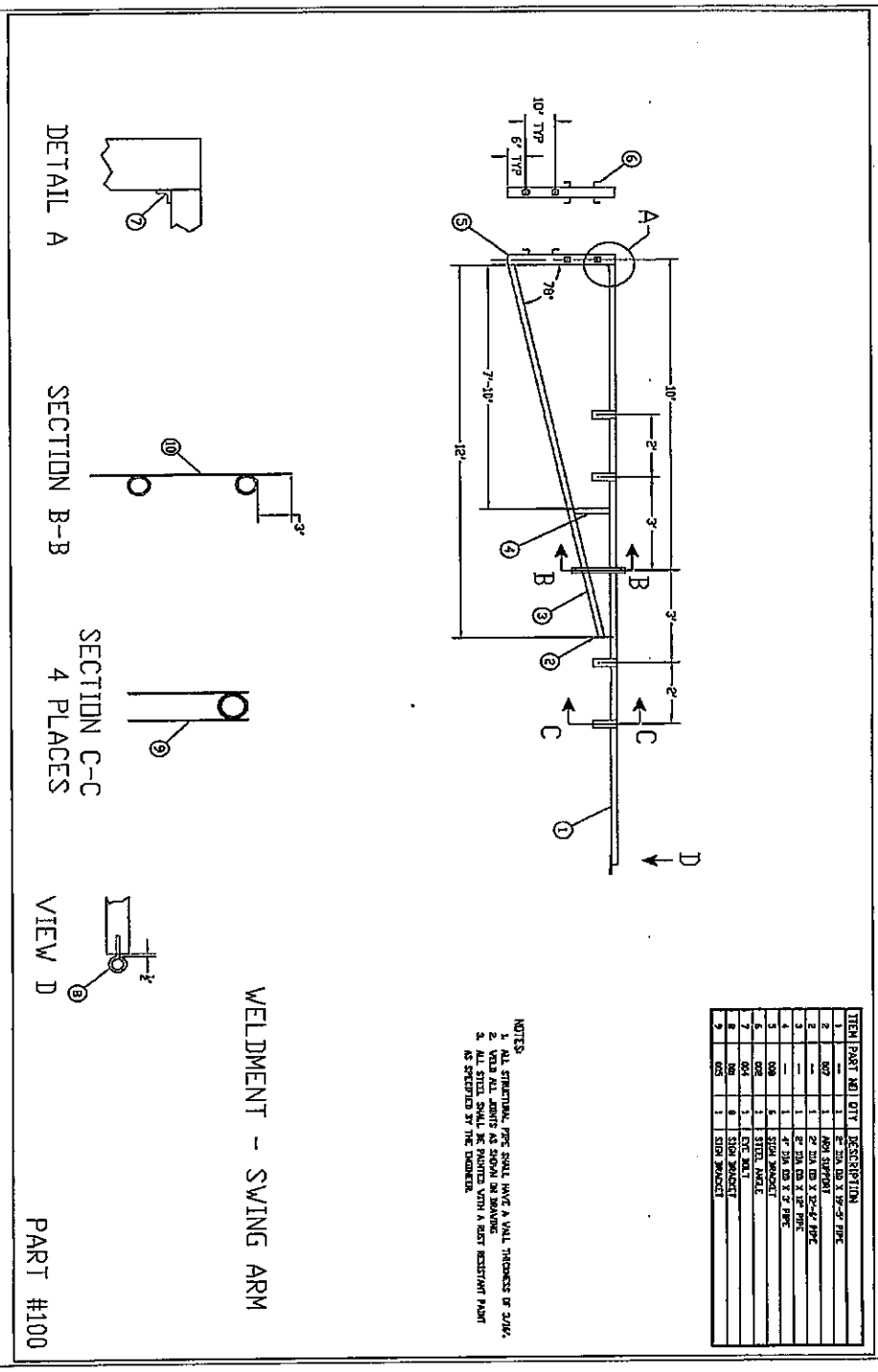

PROSPECTUS ATTACHMENT

ROAD MAINTENANCE REQUIREMENTS

Garden PL **CT5.31# Special Provisions**

T-8620 **Miscellaneous Maintenance (continued)**

Gate Specifications, page 5 of 8

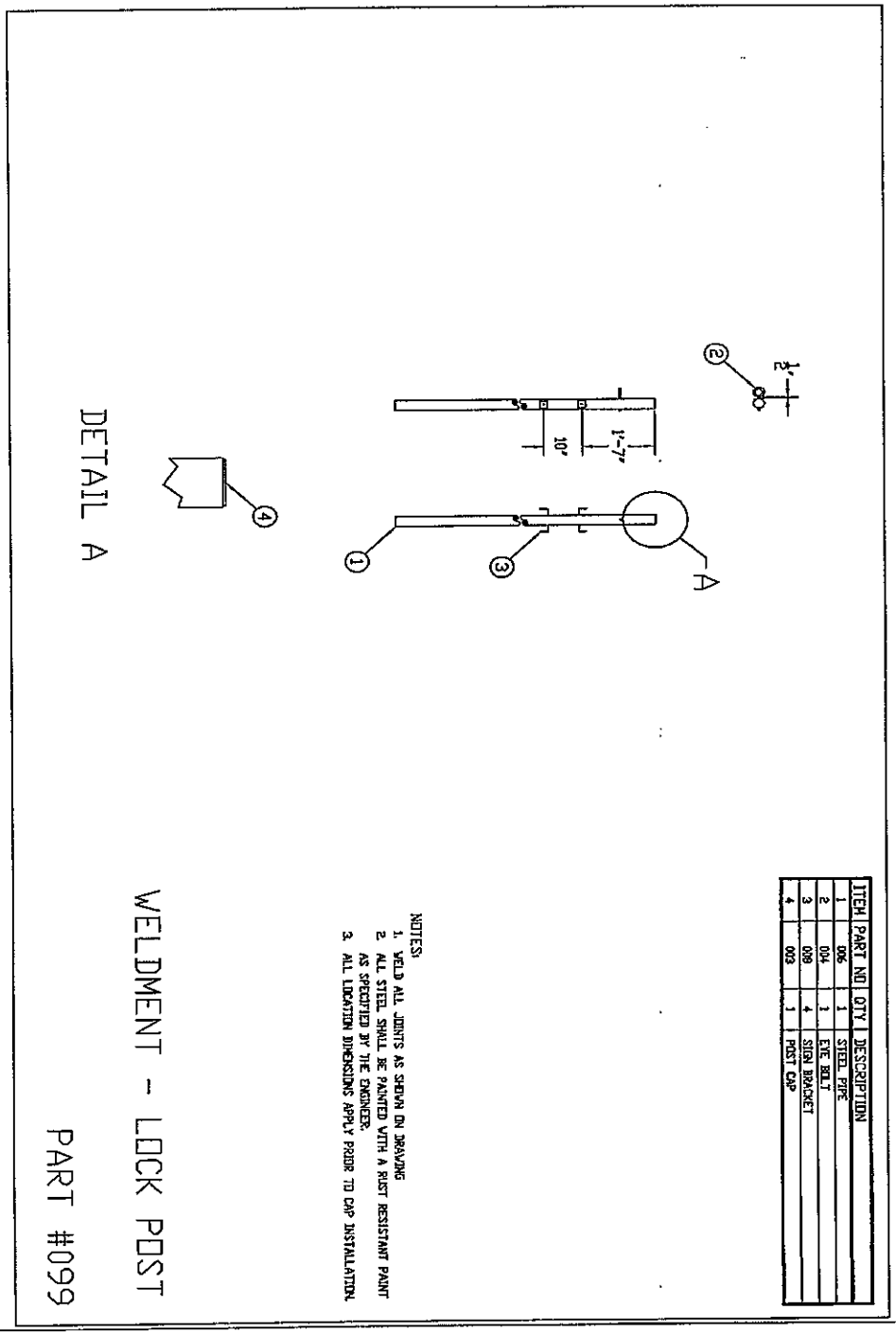

PROSPECTUS ATTACHMENT

ROAD MAINTENANCE REQUIREMENTS

Garden PL **CT5.31# Special Provisions**

T-8620 **Miscellaneous Maintenance (continued)**

Gate Specifications, page 6 of 8

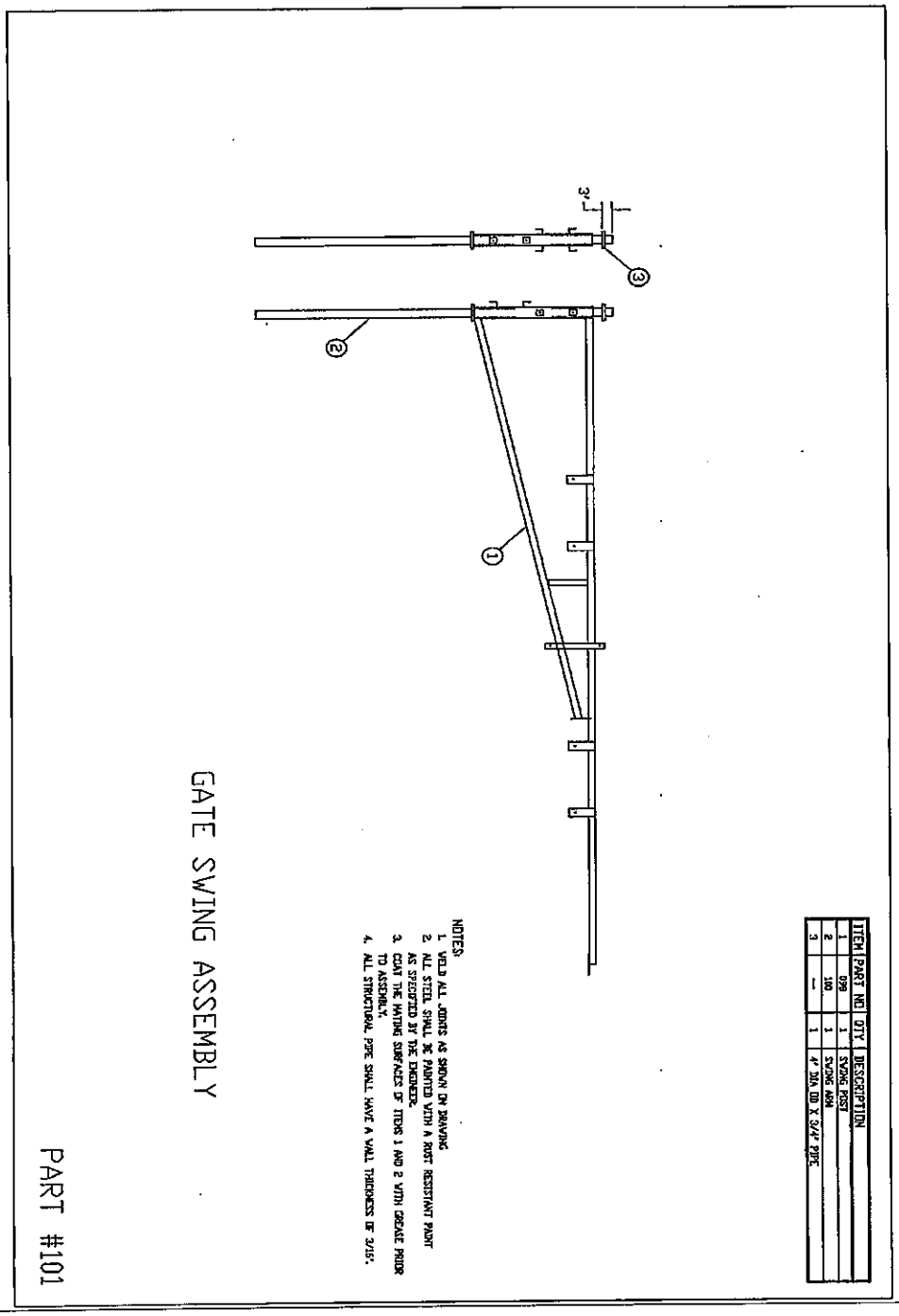

PROSPECTUS ATTACHMENT

ROAD MAINTENANCE REQUIREMENTS

Garden PL **CT5.31# Special Provisions**

T-8620 **Miscellaneous Maintenance (continued)**

Gate Specifications, page 7 of 8

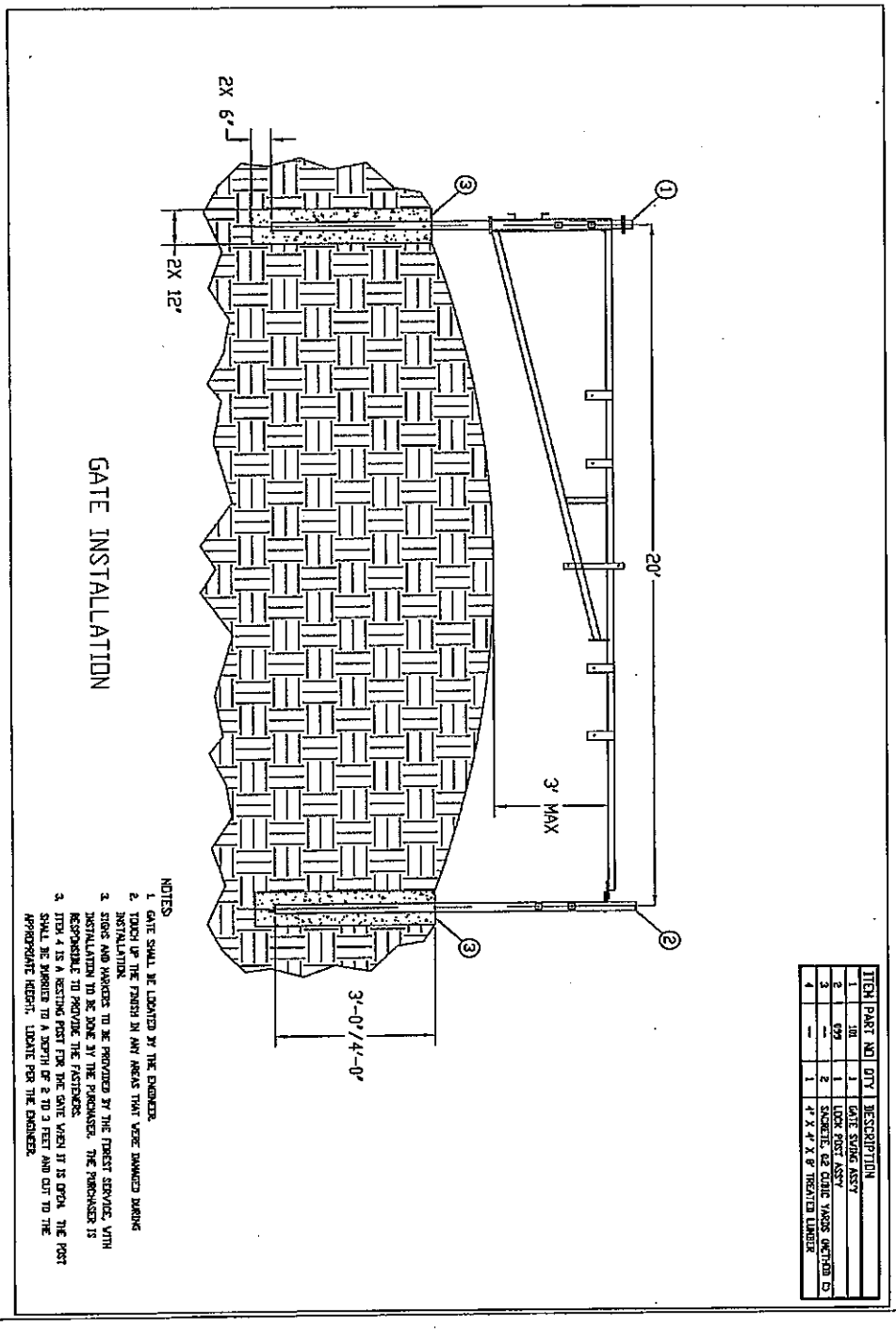

PROSPECTUS ATTACHMENT

ROAD MAINTENANCE REQUIREMENTS

Garden PL **CT5.31# Special Provisions**

T-8620 **Miscellaneous Maintenance (continued)**

Gate Specifications, page 8 of 8

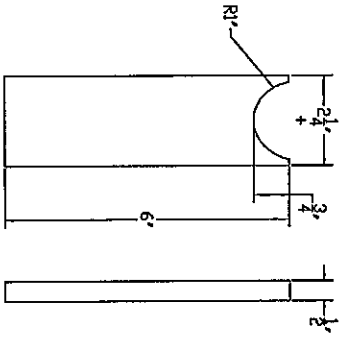

PART #007 - ARM SUPPORT

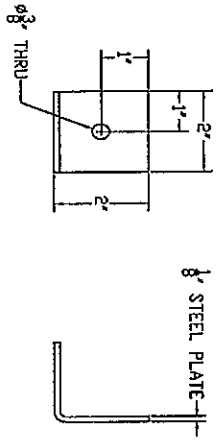

PART #008 - SIGN BRACKET

USDA - Forest Service

BID FOR ADVERTISED TIMBER
(Reference FSM 2430, FSH 2409.18, Section 57.2)

1. Sale Number:	2. Date and Time of Bid Opening:	3. Opened By:	4. In the Presence of:
21402	05/06/2014 11:00 AM		

5. Sale Name: Garden PL

6. National Forest: Chequamegon/Nicolet

7. Ranger District: Great Divide

8. Type of Bid:
a. [X] Sealed Bid
b. [ ] Confirmation of Oral Bid

9. To: (Title and address of Sale Officer receiving bids)	10. Name of Newspaper:	11. Date Published:
Glidden District Office Bid Custodian PO Box 126 Glidden, WI, WI 54527	Glidden Enterprise	04/02/2014
	12. City:	13. State:
	Glidden	Wisconsin

INSTRUCTIONS TO SALE OFFICER: Verify that TIM has completed applicable blanks before sending to prospective Bidders. Attach copy of sale advertisement. Entries are required in blocks 1, 2, 5, 6, 7, 8a or b, 9, 10, 11, 12, 13, 14a, b, c, d, e, f, h, & i, 15a, 19, and 20 and instruction 13 in all sales. Strike out spaces for entries in one or more columns e, h, or i, if not applicable to the sale.

************In Response to the Notice of Sale published in the newspaper specified above, and subject to the conditions attached hereto, the following bid is submitted and shall constitute a Firm Offer:************

14. Bid Information:

Species (a)	Product (b)	Unit of Measure (c)	Estimated Quantity (d)	Rates Per Unit of Measure: Base Rate (e)	Advertised Rate (f)	Bid Rate (g)	Additional Deposits for Slash Disposal (h)	Base Indices (i)
Mixed Hardwood	Sawtimber	CCF	64.00	$18.73	$35.92		$0.00	N/A
Oak	Sawtimber	CCF	367.00	$19.64	$36.88		$0.00	N/A
Sugar Maple	Sawtimber	CCF	117.00	$25.27	$48.35		$0.00	N/A
Aspen	Pulpwood	CCF	890.00	$14.41	$28.30		$0.00	N/A
Mixed Conifer	Pulpwood	CCF	68.00	$5.92	$11.01		$0.00	N/A
Mixed Hardwood	Pulpwood	CCF	3,677.00	$7.53	$14.29		$0.00	N/A
Oak	Pulpwood	CCF	880.00	$7.76	$14.76		$0.00	N/A

15. BID GUARANTEE:

a. The minimum guarantee which must accompany this bid is $11,300.00.
b. The form of guarantee accompanying this bid is a(n) _____ in the amount of $ _____ (See Instruction 6 for acceptable forms of payment.)

16. BIDDER RESPONSIBILITY CERTIFICATION: Subject to the penalties prescribed in 18 USC 1001, Bidder certifies, by signing this bid form, that to the best of Bidder's knowledge that the following representations are accurate and complete:

a. That the Bidder has not employed or retained any company or person (other than a full-time bona fide employee working solely for the Bidder) to solicit or secure a contract for this timber or forest product.

b. That the Bidder has not paid or agreed to pay any company or person (other than a full-time bona fide employee working solely for the Bidder) any fee, commission, percentage or brokerage fee, contingent upon or resulting from the award of contract for this timber or forest product, and agrees to furnish information relating thereto as requested by the Contracting Officer.

c. That the Bidder meets the requirements in 36 CFR 223.101 regarding determination of purchaser responsibility.

d. That if awarded this contract that Bidder will complete the timber sale contract to its terms and any modifications thereof including requirements to purchase, cut, and remove the included timber or forest product by the termination date.

16a. BIDDER CERTIFICATION REGARDING DEBARMENT, SUSPENSION, AND OTHER RESPONSIBILITY MATTERS: Subject to the penalties prescribed in 18 USC 1001, Bidder certifies, by signing this bid form, that to the best of Bidder's knowledge that the following representations are accurate and complete.

a. That the Bidder and its principals are not presently debarred, suspended, proposed for debarment, declared ineligible, or voluntarily excluded from timber sales (covered transactions) by any Federal department or agency.

b. That the Bidder and its principals have not within a 3-year period preceding this bid been convicted of or had a civil judgment rendered against them for commission of fraud or a criminal offense in connection with obtaining, attempting to obtain, or performing a public (Federal, State, or local) transaction or contract under a public transaction; violation of Federal or State antitrust statutes or commission of embezzlement, theft, forgery, bribery, falsification or destruction of records, making false statements, or receiving stolen property.

c. That the Bidder and its principals are not presently indicted for or otherwise criminally or civilly charged by a governmental entity (Federal, State, or local) with commission of any of the offenses enumerated in paragraph b of this certification.

d. That the Bidder and its principals have not within a 3-year period preceding this bid had one or more public transactions (Federal, State, or local) terminated for breach or default of a timber or forest product contract.

Bidders that cannot certify this block, in whole or in part, shall submit an explanation with their bid (See Instruction 16.).

16b. BIDDER INFORMATION REQUIREMENTS: Subject to the penalties prescribed in 18 USC 1001, Bidder certifies, by signing this bid form, that to the best of Bidder's knowledge that the following information is accurate.

a. That the Bidder [ ] has, [ ] has not participated in a previous contract subject to the provision of section 202 of Executive Order 11246 (Non-discrimination in Employment) of 9/24/65, as amended; and that the Bidder [ ] has, [ ] has not submitted required compliance reports under such previous contracts.

b. That the Bidder together with its affiliates employs the following number of persons and is classified as:
[ ] 1-25 [ ] 26-500 [ ] Over 500 **and** a: [ ] Manufacturer [ ] Nonmanufacturer of sawtimber

17. CERTIFICATE OF INDEPENDENT PRICE DETERMINATION: Subject to the penalties prescribed in 18 USC 1001, Bidder certifies and represents, by signing this bid form, that the following representations are accurate and complete:

a. By submission of this bid each Bidder also certifies, and in the case of a joint bid each party thereto certifies as to its own organization, that in connection with this sale:

(1) The prices in this bid have been arrived at independently, without consultation, communication, or agreement, as to any matter relating to such prices with any other Bidder or with any potential competitor;
(2) The prices which have been quoted in this bid have not been knowingly disclosed by the Bidder and will not knowingly be disclosed by the Bidder prior to opening of bid, directly or indirectly to any other Bidder or to any potential competitor; and
(3) No attempt has been made or will be made by the Bidder to induce any other person or firm to submit or not to submit a bid.

b. Each person signing this bid or proposal certifies that:

(1) The Signer is the person in the Bidder's organization responsible within that organization for the decision as to the prices bid herein and that the Signer has not participated, and will not participate, in any action contrary to a(1) through a(3) above; or
(2) The Signer is not the person in the Bidder's organization responsible within that organization for the decision as to prices bid herein but that the Signer has been authorized in writing to act as agent for the persons responsible for such decision in certifying that such persons have not participated, and will not participate, in any action contrary to a(1) through a(3) above, and as their agent does hereby so certify; and that the Signer has not participated, and will not participate, in any action contrary to a(1) through a(3) above.

c. A bid will not be considered for award where any portion of a or b above has been deleted or modified. Where these provisions have been deleted or modified, the bid will not be considered for award unless Bidder furnishes with the bid a sworn statement which sets forth in detail the circumstances of the disclosure and the Chief, Forest Service, or the Chief's designee, determines that such disclosure was not made for the purpose of restricting competition.

18. ROAD CONSTRUCTION OPTION:
Not applicable.

19. CONTRACT, DOWNPAYMENT, AND BOND: The Bidder whose bid is accepted will, within 30 days of the award letter's date, or any written extension thereof by the Forest Service, execute a timber sale contract which shall be provided by the Forest Service and be based on the sample contract referenced in the prospectus. Simultaneously, Bidder shall submit a downpayment and furnish a satisfactory performance bond, in accordance with the provisions of such timber sale contract, in the penal sum as prescribed in the prospectus for this sale, and otherwise complete the process described on this form and pages attached hereto. The rate of interest for a late downpayment is 1 percent. Bidder agrees that its failure to comply with this paragraph shall result in a termination of this contract for breach under provisions of instruction 9 of the Instructions to Bidders portion of this form.

20. DOWNPAYMENT: Pursuant to 36 CFR 223.49, the Bidder to whom award is made must make a downpayment at the time the contract is signed by the Bidder and returned to the Forest Service in the amount of:

[X] Ten percent of the advertised value, plus 20 percent of the total bid premium..
[ ] ___ percent or the advertised value, plus ___ percent of the total bid premium, based on the Chief's determination that this amount is necessary to deter speculation.

NOTICE: The indicated downpayment amount shall be increased to 20 percent of the total advertised value and 40 percent of the total bid premium if the Contracting Officer determines that the Bidder meets the criteria for additional downpayment established by 36 CFR 223.49.

21. FIRM OFFER: Subject to the penalties prescribed in 18 USC 1001, the Bidder hereby agrees not to withdraw this bid after the bid opening. Signing this bid form binds the Bidder to accept award under the terms of the sample contract and this bid form if its bid is accepted within 90 days after bid opening. The period for acceptance may be extended by written notice from Bidder. If Bidder qualifies as a small business and elects road construction by the Forest Service, then the Bidder agrees that its offer shall remain open through the period stated in the prospectus although that period may exceed 90 days.

22. TERMS OF BIDDER'S OFFER: Bidder certifies and represents that the Bidder has read and understands each and every provision of this bid form (together with any attachments thereto) and the sample sale contract. The Bidder agrees that it assumes the responsibility to clarify any questions before signing this form. The Bidder agrees that the written provisions of this bid form (together with any attachments) and the sample sale contract constitute the entire agreement of the parties until a written contract is executed and neither the bid form (and any attachments) nor the sample contract can be orally modified. The Bidder expressly adopts the terms of this bid form and the sample contract as material parts of the Bidder's offer for the advertised timber or forest product.

23. DISCLAIMER OF ESTIMATES AND BIDDER'S WARRANTY OF INSPECTION: Before submitting this bid, the Bidder is advised and cautioned to inspect the sale area, review the requirements of the sample sale contract, and take other steps as may be reasonably necessary to ascertain the location, estimated volumes, construction estimates, and operating costs of the offered timber or forest product. Failure to do so will not relieve the Bidder from responsibility for completing the contract.

The Bidder warrants that this bid/offer is submitted solely on the basis of its examination and inspection of the quality and quantity of the timber or forest product offered for sale and is based solely on its opinion of the value thereof and its costs of recovery, without any reliance on Forest Service estimates of timber or forest product quality, quantity or costs of recovery. Bidder further acknowledges that the Forest Service: (i) expressly disclaims any warranty of fitness of timber or forest product for any purpose; (ii) offers this timber or forest product as is without any warranty of quality (merchantability) or quantity and (iii) expressly disclaims any warranty as to the quantity or quality of timber or forest product sold except as may be expressly warranted in the sample contract.

The Bidder further holds the Forest Service harmless for any error, mistake, or negligence regarding estimates except as expressly warranted against in the sample contract.

24. CERTIFICATION OF COMPLIANCE WITH EXPORT AND SUBSTITUTION RESTRICTIONS: The Bidder certifies, by signing this bid form, that the Bidder is in compliance with applicable prohibitions against export and substitution prescribed in the Forest Resources Conservation and Shortage Relief Act of 1990, as amended (16 USC 620, *et seq.*). In Alaska, exports of logs, cordwood or primary products derived from included timber may not be transported from Alaska without Regional Forester approval (See instruction 15).

25. SMALL BUSINESS SET-ASIDE SALE:
Not applicable.

26. SPECIAL SALVAGE SALE TIMBER SALE PROGRAM SET-ASIDE SALE:
Not applicable.

27. CERTIFICATION OF NON-AFFILIATION:
Not applicable.

28. CERTIFICATION OF AFFILIATION: The Bidder certifies that a complete listing of Bidder's affiliates who are primarily engaged in the logging of forest products is included with this bid: (Add additional pages if needed; See Instructions 10 and 14):

Full Name of All Partners & Affiliates (Type or Print)	Tax Identification Number
	When requested by Contracting Officer in notice of tentative award, bidder agrees to furnish tax identification number of each partner and affiliate listed herein.

Before signing this bid, review the attached instructions to Bidders and fill in the applicable blanks in boxes 14g, 15b, 16b, 18, and 28.

Name of Bidder: (Type or Print)	By: (Signature in ink)	
Tax Identification No. :	Title: (Type or Print)	Date:

Business Name Address and Phone Number: (Include Zip Code and Area Code) (Type or Print)

Public reporting burden for this collection is estimated to be 34 hours per response, including time for reviewing instructions, searching existing data sources, gathering and maintaining the data needed, and completing and reviewing the collection of information. Under the Paperwork Reduction Act of 1995, an agency shall not conduct or sponsor, and no persons are required to respond to, a collection of information unless it displays a valid OMB control number. The valid OMB control number for this collection of information is 0596-0066.

Deposits will be returned to unsuccessful Bidders by certified mail unless deposits are returned personally.

Receipt for Returned Deposits:

Check Number_____ in the amount of $_____dated _____ was returned to

_____

Signature: _____ Date:_____

INSTRUCTIONS TO BIDDERS

1. BIDDER'S QUALIFICATIONS: Before a bid is considered for award, the Bidder may be required to submit a statement regarding the Bidder's previous experience in performing comparable work, business affiliates and technical organizations, financial resources, intended product processing facilities and its timber exporting history.

2. PREPARATION OF SEALED BIDS: Bids shall be manually signed, bid prices entered into each block of the Bid Column (Block 14g) for all material subject to bidding and all fill-in blanks completed. If erasures or other changes appear on the forms, the person signing the bid must initial each erasure or change.

3. SUBMISSION OF SEALED BIDS: Sealed bids, with the accompanying bid guarantee, must be submitted to the Sale Officer, designated by the advertisement as the receiving officer, at or prior to the time established by the advertisement. Such bids must be enclosed in a sealed envelope addressed to the designated receiving officer. The envelope should show on the outside (a) that it is a "Bid for Timber," and (b) the sale name or number, and the date and time of opening bids as shown by the advertisement. Bids received after the time specified in the sale advertisement are late bids, Forest Service Handbook 2409.18, Chapter 60 will govern acceptance of such bids.

4. PUBLIC OPENING OF SEALED BIDS: Sealed bids will be publicly opened and posted at the time and place set for opening in the advertisement.

5. ORAL AUCTION BIDDING: Not applicable.

6. BID GUARANTEE: A bid guarantee in the form of a bid bond on form FS-6500-13 (4/82 or later version), certification of annual bid bond allocation on form FS-6500-13a (4/82 or later version), an irrevocable letter of credit, the format of which has been pre-approved by the Forest Service Regional Forester, a certified check, official bank check, bank draft, cashier's check, bank or postal money order payable to the Forest Service, USDA, or cash, in an amount no less than that specified in item 15(a), must accompany each sealed bid. Failure to submit an acceptable bid guarantee with the sealed bid will require rejection of the bid as non-responsive unless there is no other acceptable bid, or unless the Forest Service, in its sole discretion, decides to briefly delay a sale advertised for sealed bids followed by oral bids in order to allow any Bidder to cure any deficiency in its bid guarantee prior to oral bidding. Bid bonds must be accompanied by a power of attorney indicating that the person signing the bond for the surety has the power to do so. The Bidder acknowledges that bid guarantee shall be retained, in whole or in part, by the Forest Service to satisfy any damages that may be assessed if the bid is accepted and Bidder subsequently fails to furnish a cash downpayment or return the executed contract and performance bond as required (See instruction 9.); and that the bid guarantee may be retained, in whole or in part, if the bid is accepted and Bidder has failed to abide by the terms of the bid or sample contract violating the False Statements Act including not meeting the requirements in 36 CFR 223.101, determination of purchaser responsibility, and Bidder has made a false statement (block 16). Otherwise, the bid guarantee shall be returned to each Bidder whose bid is not accepted.

7. AWARD OF CONTRACT: Award of the contract will be made to that responsible Bidder whose bid, conforming to the invitation for bids, is most advantageous to the United States on the basis of total value. The Government may, when in its interest, reject any or all bids or waive any informality in bids received. A written award mailed (or otherwise furnished) to the successful Bidder shall be deemed to result in a binding contract without further action by either party. If timber is advertised as set-aside for competitive bidding by small businesses, award will be made to the highest Bidder qualified as a small business and who has not been determined by the SBA to be ineligible for preferential award of set-aside sales. If there are no qualified small business Bidders, Forest Service will advertise this sale without restrictions on bidder size. All small businesses qualified, as a small business by the SBA, shall be required to follow the small business set-aside provisions of the sample contract.

If an appeal or lawsuit is filed challenging the decision to award this contract or upon determination by the Regional Forester that conditions existing on this timber sale are the same as, or nearly the same as, conditions existing on other timber sale(s) in appeal or litigation, Contracting Officer may delay award or reject all bids. If delay in award is for 10 days or more during Normal Operating Season after bid opening, Contracting Officer shall, upon award, adjust the contract term to include additional calendar days in one or more Normal Operating Seasons equal to the actual time lost.

8. DOWN PAYMENT: The Bidder to whom award is made must make a downpayment at the time the

Bidder signs the contract and returns the contract to the Forest Service. The amount of the downpayment will be calculated as shown in block 20 of this bid for advertised timber. Only cash may be used to meet this requirement. Cash deposited must be in the form of bank draft, certified, official bank, or cashier's check, bank or postal money order, or company check. After receipt of downpayment and executed contract with required performance bond, the bid guarantee will be returned to the successful Bidder.

Bidder's failure to make the downpayment in conformance with the terms, conditions, and requirements contained in Contracting Officer's letter of award shall constitute repudiation of bid pursuant to instruction 9. Bidder shall have 3 days from the required date of execution to make the downpayment at the location designated by Forest Service. Bidder shall pay interest on the unpaid downpayment for the period within the 3 days in which the downpayment is late. The rate of interest is stated in block 19 of this bid for advertised timber. In the event Bidder fails to make payment within the 3 days, Bidder's bid guarantee shall be retained by Forest Service and applied toward damages. If the amount of the bid guarantee exceeds the amount of damages, the balance will be refunded to Bidder.

9. DAMAGES: Bidder acknowledges that this contract shall be terminated for breach pursuant to blocks 16, 16a, 16b, 19, 21, 24, 25, 26, 27, and/or 28 of this bid form if: (a) the Bidder fails to execute a timber sale contract, furnish a downpayment within 3 days of the required date of execution, or furnish a satisfactory performance bond, within the number of days listed in block 19, or any written extension thereof by Forest Service; or (b) the Bidder is found to have violated the False Statements Act in making any statement or certification on this bid form, including not meeting purchaser responsibility requirements. The Bidder acknowledges that the Bidder shall not be entitled to cure this breach and that it will pay damages pursuant to the following terms:

Damages due the United States shall be determined in the following manner: (a) The costs, as described in this instruction, incurred by Forest Service in contacting the other qualified bidders regarding accepting the award of the contract at the high Bidder's repudiated rate or (b) If another qualified bidder does not accept award of the contract at the high Bidder's repudiated rate:

(i) If the repudiated contract is reoffered within 6 months of the date of repudiation, damages shall be the difference between the total resale bid value and the total value of Bidder's repudiated bid, plus costs described in this instruction or
(ii) If there are no responsive bids on the reoffered contract, damages shall be the difference between the reoffered appraised value and the total value of Bidder's repudiated bid, plus costs described in this instruction or
(iii) If the repudiated contract will not be reoffered or the reoffer is not made within 6 months of Bidder's repudiation, damages shall be the difference between the appraised value of this contract as of the date of Bidder's repudiation and the total value of Bidder's repudiated bid, plus the costs described in this instruction.

The costs to be included in damages are the costs the Government incurs in making the reoffer, including, but not limited to, salary costs, document preparation and duplication costs, mailing costs, and timber sale advertisement costs.

Damages will also include interest measured by interest at the Current Value of Funds Rate established by the Secretary of the Treasury, on the difference between Bidder's retained bid guarantee and the downpayment amount and other deposits required at award. Interest will be calculated from the date of Bidder's repudiation to the date of award of the reoffered contract or to the date a determination is made not to reoffer the repudiated contract or for 6 months, whichever comes first.

Bidder and Forest Service agree that Bidder's bid guarantee shall be retained by Forest Service and applied toward damages due the United States for Bidder's failure to execute this contract.

10. PRIVACY ACT: All personal information is requested on a voluntary basis; however, if you do not provide this personal information, your bid will not be accepted and the contract will not be awarded to you. Solicitation of this information is necessary for the government to conduct its sale program and thus is authorized under the National Forest Management Act of 1976, (16 USC 472a). The principal purpose for collecting this information is to allow for proper award of a timber sale contract and to provide for administration of that contract after award. Other routine uses of this data include: (1) compilation of Small Business data to determine needs for set-aside sales, (2) determination of volume purchased in any specific time period by a single purchaser, and (3) determination of volume under contract by a purchaser.

11. ROAD COMPLETION DATE: Not applicable.

12. ELECTION OF ROAD OPTION AND CERTIFICATE OF SMALL BUSINESS STATUS: Not applicable.

13. ELECTION OF ROAD OPTION: Not applicable.

14. DEFINITIONS:
Affiliates: Business concerns or individuals are affiliates of each other if, directly or indirectly, (a) either one controls or has the power to control the other; or (b) a third party controls or has the power to control both.
Bidder: A Bidder is any individual, organization, or other legal entity that submits a bid for, or may be expected to submit a bid for, a National Forest timber sale.
Covered Transactions: A primary or lower tier covered transaction. A primary covered transaction is any nonprocurement transaction between an agency and a person. A lower tier covered transaction is any transaction between a participant and a person other than a procurement contract unless the procurement contract is greater than $25,000.
Participant: Any person who submits a proposal for, enters into, or reasonably may be expected to enter into a covered transaction. This term also indicates any person who acts on behalf of or is authorized to commit a participant in a covered transaction as an agent or representative of another participant.
Sale Officer: An individual delegated responsibility for any specific aspect or task in the bidding or awarding process for timber sales.
Small Business: In sales of National Forest timber a Small Business is a concern that: (1) is primarily engaged in the logging and forest products industry; (2) is independently owned and operated; (3) is not dominant in its field of operation; and (4) together with its affiliates does not employ more than 500 persons.

15. CERTIFICATION OF COMPLIANCE WITH EXPORT RESTRICTIONS: Certain restrictions on the purchase and export of unprocessed logs cut from National Forest timber apply in various parts of the country. Pursuant to the Forest Resources Conservation and Shortage Relief Act of 1990, as amended (16 USC 620, *et seq.*), the Bidder acknowledges that the Bidder is aware of the applicable export restrictions. The Bidder is aware that these restrictions affect the disposition of the included timber and is aware that the restrictions may reduce the potential value of the timber.

16. CERTIFICATION REGARDING DEBARMENT, SUSPENSION, PROPOSED DEBARMENT, AND OTHER RESPONSIBILITY MATTERS-TIMBER SALE TRANSACTIONS: The inability of a person to provide the certifications in block 16 will not necessarily result in denial of participation in this timber sale (covered transaction). The Bidder shall submit an explanation of why it cannot provide the certification. The certification or explanation will be considered in connection with the Forest Service's determination whether to enter into this timber sale. However, failure of the Bidder to furnish a certification or an explanation shall disqualify such person from participation in this timber sale.

The certification is a material representation of fact upon which reliance was placed when the Forest Service determined to enter into this timber sale. If it is later determined that the Bidder knowingly rendered an erroneous certification, in addition to other reme-dies available to the Federal Government, the Forest Service may terminate this timber sale for cause or default.

The Bidder shall provide immediate written notice to the Forest Service officer, to whom this bid is submitted, if at any time the Bid-der learns that its certification was erroneous when submitted or has become erroneous by reason of changed circumstances.

The terms 'covered transaction,' 'debarred,' 'suspended,' 'ineligible,' 'lower tier covered transaction,' 'participant,' 'person,' 'primary covered transaction,' 'principal,' 'proposal,' and 'voluntarily excluded,' as used in this clause, have the meanings set out in the Defini-tions and Coverage sections of the rules implementing Executive Order 12549. You may contact the Forest Service for assistance in obtaining a copy of those regulations.

The Bidder agrees by submitting this bid that, should the proposed timber sale transaction be entered into, it shall not knowingly en-ter into any subcontractor transaction (lower tier covered transaction) with a person who is proposed for debarment under 48 CFR 9.4, debarred, suspended, declared ineligible, or voluntarily excluded from participation in this timber sale, unless authorized by the Forest Service's non-procurement Debarring and Suspending Official.

The Bidder further agrees by submitting this bid that it will provide the addendum titled 'Subcontractor Certification

Regarding De-barment, Suspension, Ineligibility, and Voluntary Exclusion,' without modification, to all subcontractors and in all solicitations for sub-contractors.

17. SUBCONTRACTOR CERTIFICATION REGARDING DEBARMENT, SUSPENSION, INELIGIBILITY, AND VOLUNTARY EXCLUSION: Pursuant to 7 CFR 3017.510 each timber sale purchaser shall require subcontractors to include a certification for it and its principals in any proposal submitted in connection with this timber sale. Purchasers shall keep the certifications on file until the termination date of the contract.

A participant in a timber sale may rely upon a certification of a prospective subcontractor that it is not proposed for debarment under 48 CFR 9.4, debarred, suspended, ineligible, or voluntarily excluded from the timber sale, unless it knows that the certification is erroneous. A timber sale purchaser may decide the method and frequency by which it determines the eligibility of its principals. Each timber sale purchaser may, but is not required to, check the List of Parties Excluded from Federal Procurement and Nonprocurement Programs.

Nothing contained in the foregoing shall be construed to require establishment of a system of records in order to render in good faith the certification required by this provision. The knowledge and information of a timber sale purchaser is not required to exceed that which is normally possessed by a prudent person in the ordinary course of business dealings.

Except for transactions authorized under paragraph 5 of these instructions, if a timber sale purchaser knowingly enters into a subcontractor transaction with a person who is proposed for debarment under 48 CFR 9.4, suspended, debarred, ineligible, or voluntarily excluded from participation in this timber sale, in addition to other remedies available to the Federal Government, the Forest Service may terminate this timber sale for cause or default and/or pursue suspension and/or debarment. The instructions and certification follow:

INSTRUCTIONS FOR:
Subcontractor Certification
Regarding Debarment, Suspension, Ineligibility, and Voluntary Exclusion

1. By signing and submitting this proposal, the prospective subcontractor (lower tier participant) is providing the certification set out below:

2. The certification is a material representation of fact upon which reliance was placed when this transaction was entered into. If it is later determined that the prospective subcontractor knowingly rendered an erroneous certification, in addition to other remedies available to the Federal Government, the Forest Service, with which this transaction originated, may pursue available remedies, including suspension and/or debarment.

3. The prospective subcontractor shall provide immediate written notice to the person to whom this proposal is submitted if at any time the prospective subcontractor learns that its certification was erroneous when submitted or has become erroneous by reason of changed circumstances.

4. The terms 'covered transaction,' 'debarred,' 'suspended,' 'ineligible,' 'lower tier covered transaction,' 'participant,' 'person,' 'primary covered transaction,' 'principal,' 'proposal,' and 'voluntarily excluded,' as used in this clause, have the meanings set out in the Definitions and Coverage sections of the rules implementing Executive Order 12549. You may contact the Forest Service for assistance in obtaining a copy of those regulations.

5. The subcontractor agrees by submitting this certification that, should the proposed subcontract be entered into, it shall not knowingly enter into any other subcontract with a person who is proposed for debarment under 48 CFR 9.4, debarred, suspended, declared ineligible, or voluntarily excluded from participation in this timber sale, unless authorized by the Forest Service.

6. The subcontractor further agrees by submitting this certification that it will include this certification titled "Subcontractor Certification Regarding Debarment, Suspension, Ineligibility and Voluntary Exclusion," without modification, and instructions in all subcontracts and in all solicitations for its subcontracts.

Subcontractor Certification
Regarding Debarment, Suspension, Ineligiblity, and Voluntary Exclusion

Sale Name: Garden PL

National Forest: Chequamegon/Nicolet

The prospective subcontractor (participants in lower tier covered transactions) certifies, by submission of this proposal, that neither it nor its principals is presently debarred, suspended, proposed for debarment, declared ineligible, or voluntarily excluded from participation in this timber sale by any Federal department or agency.

Where the prospective subcontractor is unable to certify to any of the statements in this certification, such prospective subcontractor shall attach an explanation to this proposal.

Name of Subcontractor: _____

Business Address: _____
_____
_____

_____ _____
Date Signature

BIDDER BOND INFORMATION

Region: 09 Eastern Forest: 13 Chequamegon-Nicolet

Sale Name:

Bidder Name:_____ Bid Date: Time:

If awarded this sale, I, the purchaser, request my cash equivalent bid guarantee be applied towards my Down Payment deposit requirement.

Yes _____ No _____

For the Performance Guarantee coverage, I plan to use (check one):

- ☐ Unknown
- ☐ Cash
- ☐ Letter of Credit
- ☐ Assignment of Savings
- ☐ Assignment of Certificate of Deposit
- ☐ Negotiable Securities
- ☐ Corporate Surety
  - Name: _____
  - Address: _____
  - City/State/Zip: _____

For the Payment Guarantee coverage (check one):

- ☐ I will not use a Payment guarantee
  - I will be making advance cash payments as needed.
- ☐ Unknown
- ☐ Payment Bond (applicable to this sale only)
  - In the amount of $_____
- ☐ Blanket Payment Bond
  - Add this sale to existing Blanket Payment Bond
    - Bond #: _____
- ☐ I will be executing a new Blanket Bond

My payment guarantee coverage will be secured by the following (check one):

- ☐ Unknown
- ☐ Letter of Credit
- ☐ Assignment of Savings
- ☐ Assignment of Certificate of Deposit
- ☐ Negotiable Securities
- ☐ Corporate Surety
  - Name: _____
  - Address: _____
  - City/State/Zip: _____

_____ _____

Purchaser or Authorized Representative Date

NOTE: Collection of the above information is for the purposes of tailoring the award documents specific to your company needs. **Completion is strictly optional**. Without the above information, the full range of forms will be made available and you will be allowed to choose the guarantee type(s) that best meet your needs. **Please return with bid form.**

This form is available electronically.

Form Approved – OMB No. 0505-0025
Expiration Date: 02/29/2016

AD-3030-FS

U.S. DEPARTMENT OF AGRICULTURE

REPRESENTATIONS REGARDING FELONY CONVICTION AND TAX DELINQUENT STATUS FOR CORPORATE APPLICANTS

Note: You only need to complete this form if you are a corporation. A corporation is any entity that has filed articles of incorporation in one of the 50 States, the District of Columbia, or the various territories of the United States including American Samoa, Federated States of Micronesia, Guam, Midway Islands, Northern Mariana Islands, Puerto Rico, Republic of Palau, Republic of the Marshall Islands, or the U.S. Virgin Islands. Corporations include both for profit and non-profit entities.

The following statement is made in accordance with the Privacy Act of 1974 (5 U.S.C. 552(a), as amended). The authority for requesting the following information is sections 433 and 434 of the Consolidated Appropriations Act, 2012, P.L. 112-74, and subsequent similar provisions. The information will be used to confirm applicant status concerning entity conviction of a felony criminal violation, and/or unpaid Federal tax liability status.

According to the Paperwork Reduction Act of 1985 an agency may not conduct or sponsor, and a person is not required to respond to a collection of information unless it displays a valid OMB control number. The valid OMB control number for this information collection is 0505-0025. The time required to complete this information collection is estimated to average 15 minutes per response, including the time for reviewing instructions, searching existing data sources, gathering and maintaining the data needed, and completing and reviewing the collection of information.

1. APPLICANT'S NAME	2. APPLICANT'S ADDRESS *(Including Zip Code)*	3. TAX ID NO. *(Last 4 digits)*

4A. Has the Applicant been convicted of a felony criminal violation under Federal law in the 24 months preceding the date of application? ☐ YES ☐ NO

4B. Has any officer or agent of Applicant been convicted of a felony criminal violation for actions taken on behalf of Applicant under Federal law in the 24 months preceding the date of application? ☐ YES ☐ NO

4C. Does the Applicant have any unpaid Federal tax liability that has been assessed, for which all judicial and administrative remedies have been exhausted or have lapsed, and that is not being paid in a timely manner pursuant to an agreement with the authority responsible for collecting the tax liability? ☐ YES ☐ NO

Providing the requested information is voluntary. However, failure to furnish the requested information will make the applicant ineligible to enter into a contract, memorandum of understanding, grant, loan, loan guarantee, or cooperative agreement with USDA.

PART B – SIGNATURE

5A. APPLICANT'S SIGNATURE (BY)	5B. TITLE/RELATIONSHIP OF THE INDIVIDUAL IF SIGNING IN A REPRESENTATIVE CAPACITY	5C. DATE SIGNED *(MM-DD-YYYY)*

The U.S. Department of Agriculture (USDA) prohibits discrimination in all of its programs and activities on the basis of race, color, national origin, age, disability, and where applicable, sex, marital status, familial status, parental status, religion, sexual orientation, political beliefs, genetic information, reprisal, or because all or part of an individual's income is derived from any public assistance program. (Not all prohibited bases apply to all programs.) Persons with disabilities who require alternative means for communication of program information (Braille, large print, audiotape, etc.) should contact USDA's TARGET Center at (202) 720-2600 (voice and TDD). To file a complaint of discrimination, write to USDA, Assistant Secretary for Civil Rights, Office of the Assistant Secretary for Civil Rights, 1400 Independence Avenue, S.W., Stop 9410, Washington, DC 20250-9410, or call toll-free at (866) 632-9992 (English) or (800) 877-8339 (TDD) or (866) 377-8642 (English Federal-relay) or (800) 845-6136 (Spanish Federal-relay). USDA is an equal opportunity provider and employer.