FLATHEAD NATIONAL FOREST
CONSTRUCTION DRAWINGS FOR:
FIRE FIGHTER ROADS

INDEX TO SHEETS

SHEET NO.	DESCRIPTION
1	TITLE SHEET & VICINITY MAPS
2-3	PROJECT AREA MAP
4	SUMMARY OF ESTIMATED QUANTITIES
5-6	CULVERT LISTING SHEET
7-14	TYPICAL SECTIONS & GENERAL NOTES
15-18	RD. #38B RECONSTRUCTION ROAD LOG
19-32	RD. #896 RECONSTRUCTION ROAD LOG
33	RD. #896F RECONSTRUCTION ROAD LOG
34	RD. #896G RECONSTRUCTION ROAD LOG
35 - 39	RD. #1621 RECONSTRUCTION. ROAD LOG
40	RD. #1621A RECONSTRUCTION ROAD LOG
41-42	RD. #1623 RECONSTRUCTION ROAD LOG
43 - 46	RD. #5317 RECONSTRUCTION ROAD LOG
47 - 50	RD. #11042 RECONSTRUCTION ROAD LOG
51	RD. #11042A RECONSTRUCTION ROAD LOG

VICINITY MAPS

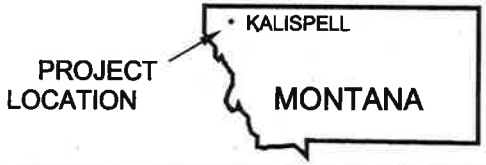

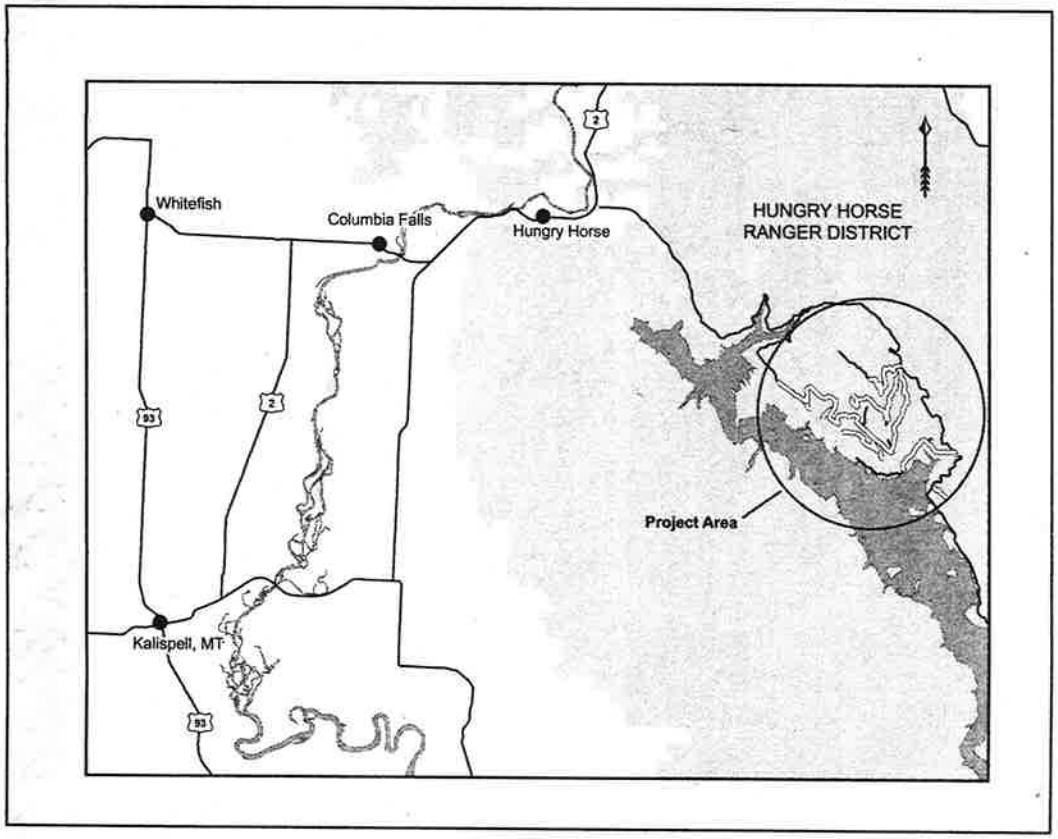

Submitted By:

Ryan Roark — *3/24/2014*

Project Engineer — Date

Recommended By:

Hungry Horse District Ranger — Date

Reviewed By:

Forest Engineer — Date

Approved By:

Forest Supervisor — Date

U.S. DEPARTMENT OF AGRICULTURE
FOREST SERVICE
R-1
NORTHERN REGION

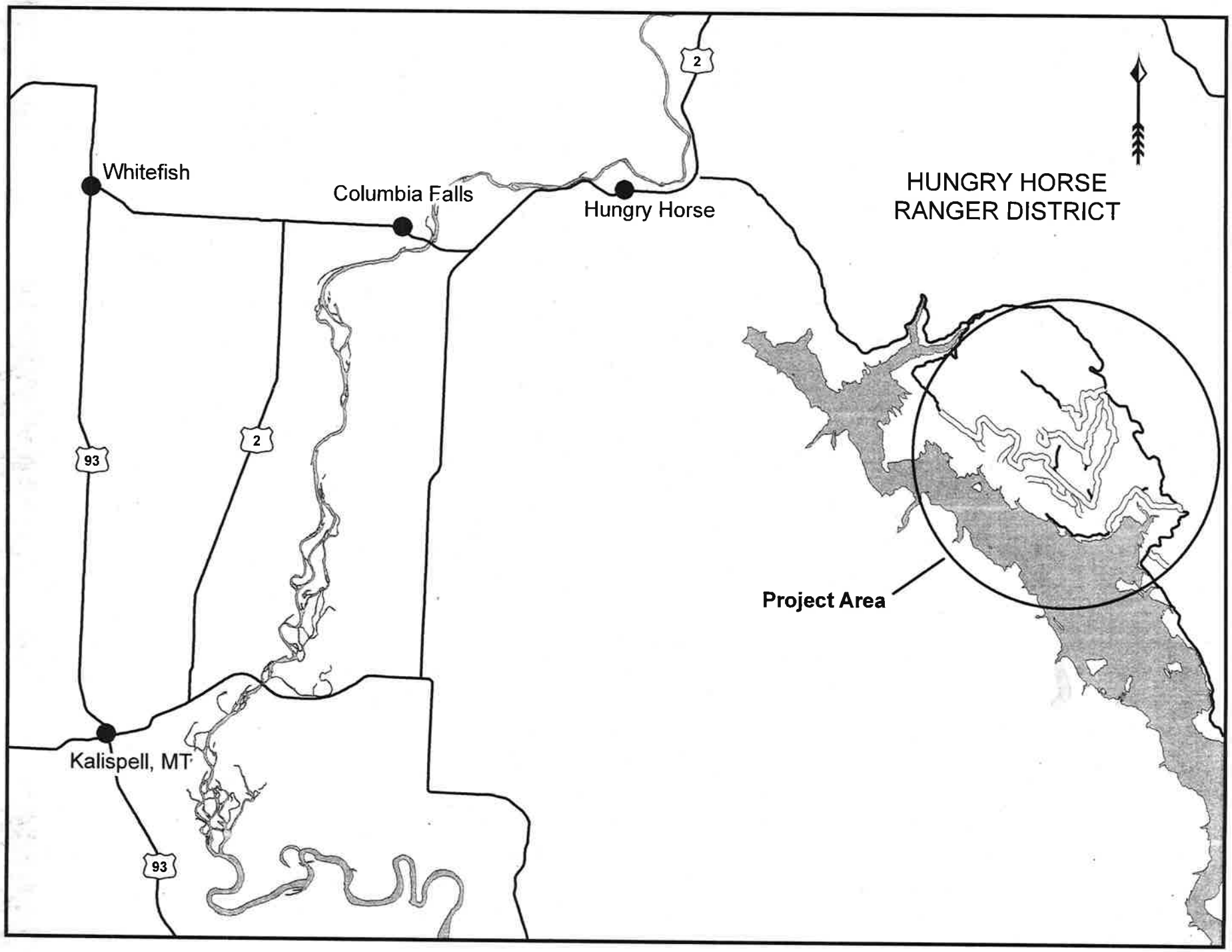
Whitefish
Columbia Falls
Hungry Horse
HUNGRY HORSE
RANGER DISTRICT
2
93
2
Project Area
Kalispell, MT
93

FIREFIGHTER

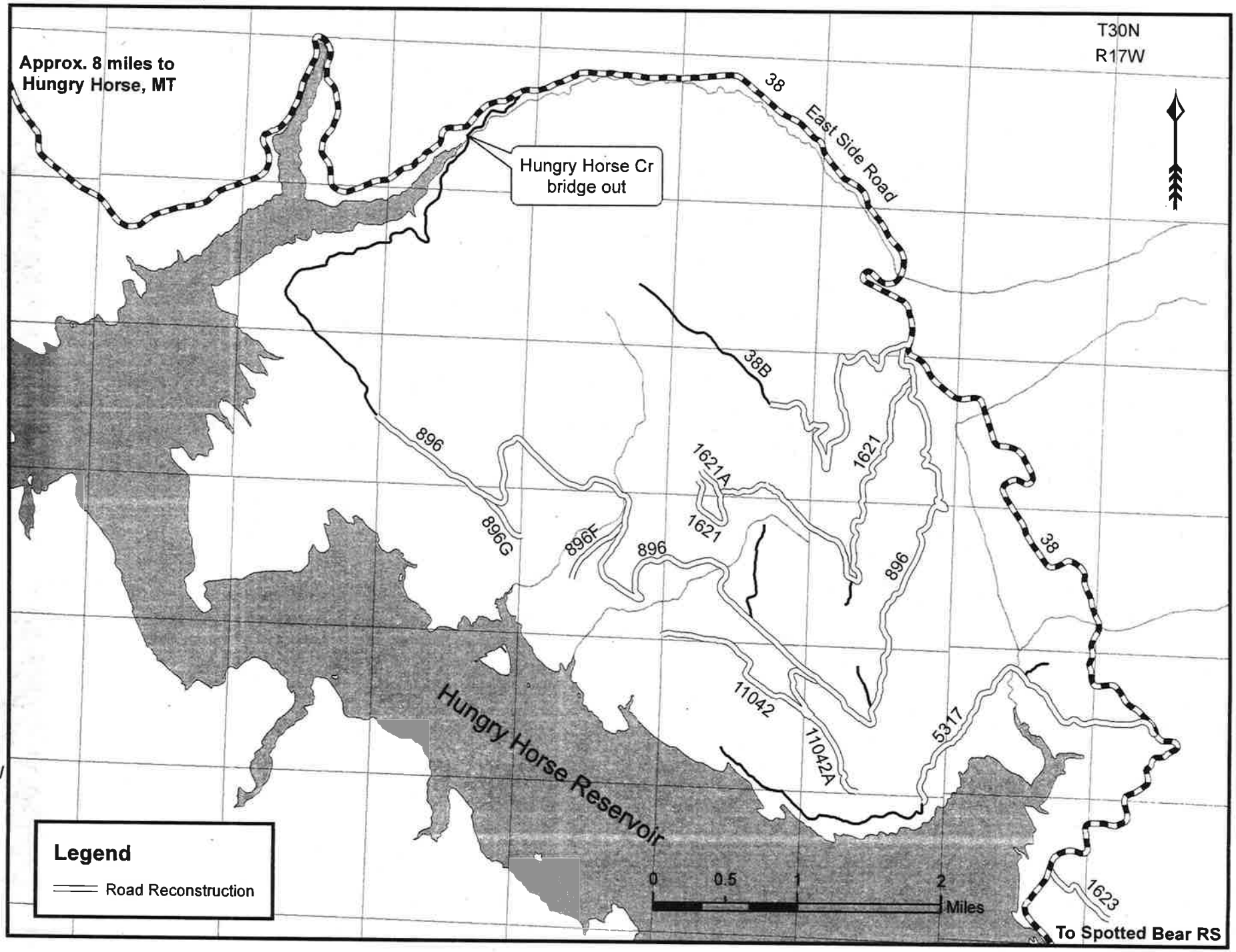

SUMMARY OF ESTIMATED QUANTITIES

PROJECT: FIREFIGHTER		ROAD NO.		38B	896	896F	896G	1621	1621A	1623	5317	11042	11042A
	ROAD LENGTH IN MILES			2.543	9.00	0.174	0.147	3.400	0.147	0.800	2.500	2.445	0.303
ITEM NO.	ITEM DESCRIPTION	MEASUREMENT METHOD	MEASUREMENT UNIT										
201(02)	BRUSHING	DQ	MILE		9.00	0.174	0.147	3.400	0.147	0.800	2.500	2.445	0.303
203(08)	UNCLASSIFIED BORROW	DQ	C.Y.	31				14			12		80
203(17)DS	DRAINAGE EXCAVATION, TYPE DRAIN SAG	AQ	EACH	4	11	1		7		14		5	1
203(17)DD	DRAINAGE EXCAVATION, TYPE DRAIN DIP	AQ	EACH	35	58	1		19	1		22	29	3
203(17)CB	DRAINAGE EXCAVATION, TYPE CATCH BASIN	AQ	EACH	2	18			6			6	2	
203(17)D	DRAINAGE EXCAVATION, TYPE DRAINAGE DITCH	DQ	L.F.	1,612	1,324			117			317		
203(17)FL	DRAINAGE EXCAVATION, TYPE FLAPPER	AQ	EACH					3					
252(01)	MECHANICALLY PLACED ROCK RETAINING WALL	LSQ	L.S.					1					
306(01)	RECONDITIONING OF ROADBED, COMPACTION A	DQ	MILE		9.00	0.174	0.147	3.400	0.147	0.800	2.500	2.445	0.303
557(01)	TIMBER STRUCTURES --BRIDGE REPAIR (TENT CR.)	LSQ	L.S.								.1		
618(01)	CLEAN CULVERT INLET / OUTLET	LSQ	L.S.	6	36			4			8	2	
601(01)	MOBILIZATION	AQ	L.F.	1	1	1	1	1	1	1	1	1	1
603(01)18	18-IN. CORRUGATED STEEL PIPE, 0.064-IN. THICKNESS	AQ	L.F.	34	440	32		214			176		
603(01)24	24-IN. CORRUGATED STEEL PIPE, 0.064-IN. THICKNESS	AQ	L.F.		148			78			66		
603(01)36	36-IN. CORRUGATED STEEL PIPE, 0.064-IN. THICKNESS	AQ	L.F.		130						84		
603(01)48	48-IN. CORRUGATED STEEL PIPE, 0.064-IN. THICKNESS	AQ	L.F.		56						74		
625(02)	SEEDING, FERTILIZING, AND MULCHING, DRY METHOD	LSQ	L.S.	1	1	1	1	1	1	1	1	1	1

CULVERT LISTING

ROAD NO.	STATION	LENGTH FEET	STEEL --- 2-⅔" X ½" CORRUGATIONS		SKEW	CATCH BASIN	DITCH BLOCK	REMARKS
			SIZE	THICKNESS				
38 B	0.233	34'	18"	0.064"	75°	X	X	Use Material From Excavation Of Ditch To Fill Over CMP
896	0.160	34'	36"	0.064"	To Channel			Small Stream — 18" Pipe Replacement (Skew To Channel)
896	0.260	44'	36"	0.064"	To Channel			Small Stream — 18" Pipe Replacement (Skew To Channel)
896	0.678	32'	18"	0.064"	45°			
896	0.866	30'	18"	0.064"	To Channel	X	X	Construct 10' Outlet Ditch
896	0.900	52'	36"	0.064"	To Channel	X	X	Small Stream — 18" Pipe Replacement (Set 2' Below Exist.)
896	0.980	28'	18"	0.064"	To Channel	X	X	Cross Drain
896	1.010	56'	48"	0.064"	To Channel	X	X	
896	1.210	30'	18"	0.064"	To Channel	X	X	Cross Drain — * 18" Pipe Replacement (Same Skew)
896	1.310	40'	18"	0.064"	To Channel	X	X	
896	1.330	56'	24"	0.064"	To Channel			Small Stream — 18" Pipe Replacement (Set 3' Below Exist.)
896	1.720	32'	24"	0.064"	To Channel			Small Stream — 18" Pipe Replacement
896	1.751	32'	18"	0.064"	70°	X	X	Cross Drain
896	2.040	36'	18"	0.064"	To Channel			Cross Drain — * 18" Pipe Replacement (Same Skew)
896	2.227	36'	18"	0.064"	To Channel	X	X	Cross Drain — * 18" Pipe Replacement (Same Skew)
896	2.690	28'	18"	0.064"	To Channel	X		Cross Drain
896	2.880	30'	18"	0.064"	To Channel	X		Cross Drain
896	4.233	36'	18"	0.064"	To Channel	X	X	Cross Drain
896	4.760	30'	24"	0.064"	To Channel			Cross Drain
896	4.913	28'	18"	0.064"	To Channel	X		Cross Drain
896	6.457	24'	18"	0.064"	To Channel	X		Cross Drain
896	6.573	30'	18"	0.064"	To Channel	X		Cross Drain

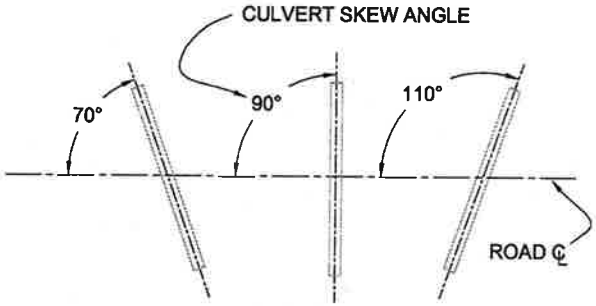

FOR ALL PIPE INSTALLATIONS, CONSERVE ROCK FROM THE PIPE AND/OR CATCH BASIN EXCAVATION AND PLACE AS RIPRAP AT PIPE INLETS & OUTLETS. ARMOR CATCH BASINS WHEN SHOWN ON THE DRAWINGS. (CONSERVING & PLACING RIPRAP IS CONSIDERED INCIDENTAL TO PIPE INSTALLATION).

CULVERT LISTING (Cont.)

ROAD NO.	STATION	LENGTH FEET	STEEL --- 2-⅔" X ½" CORRUGATIONS		SKEW	CATCH BASIN	DITCH BLOCK	REMARKS
			SIZE	THICKNESS				
896	6.660	30'	24"	0.064"	To Channel			
896 F	0.073	32'	18"	0.064"	To Channel	X		
1621	0.270	28'	18"	0.064"	To Channel			
1621	0.310	26'	18"	0.064"	To Channel	X	X	
1621	0.360	28'	18"	0.064"	To Channel			
1621	0.426	22'	18"	0.064"	To Channel	X		
1621	0.670	28'	18"	0.064"	To Channel	X	X	
1621	0.730	48'	24"	0.064"	To Channel			
1621	0.755	26'	18"	0.064"	To Channel	X	X	
1621	0.948	26'	18"	0.064"	To Channel	X		
1621	1.050	30'	24"	0.064"	To Channel			
1621	2.846	30'	18"	0.064"	To Channel	X		
5317	0.404	36'	24"	0.064"	To Channel	X	X	
5317	0.920	36'	18"	0.064"	To Channel	X	X	
5317	0.940	48'	36"	0.064"	To Channel			
5317	1.290	74'	48"	0.064"	To Channel			
5317	1.550	30'	18"	0.064"	To Channel	X	X	
5317	1.580	42'	18"	0.064"	To Channel			
5317	1.770	34'	24"	0.064"	To Channel			
5317	1.822	24'	18"	0.064"	To Channel	X	X	
5317	1.860	32'	24"	0.064"	To Channel			
5317	2.090	24'	18"	0.064"	To Channel	X	X	
5317	2.310	20'	18"	0.064"	To Channel	X	X	

TYPICAL SECTIONS & GENERAL NOTES

TYPICAL BRUSHING & RECONDITIONING LIMITS

Not to Scale

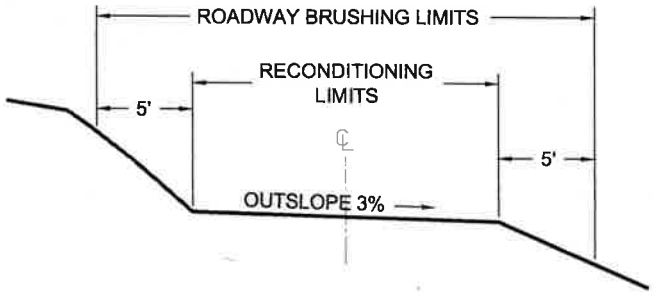

ROAD SECTIONS WITHOUT DITCH

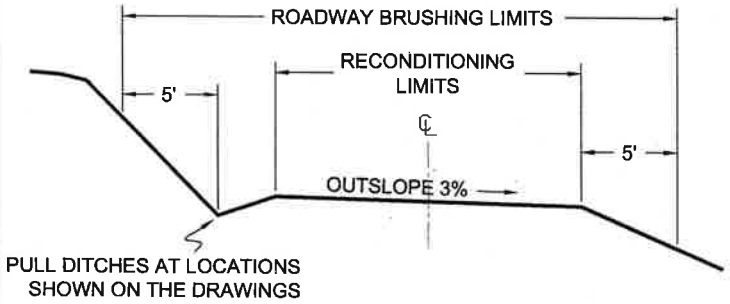

ROAD SECTIONS WITH DITCH

DRAIN DIP

NO SCALE

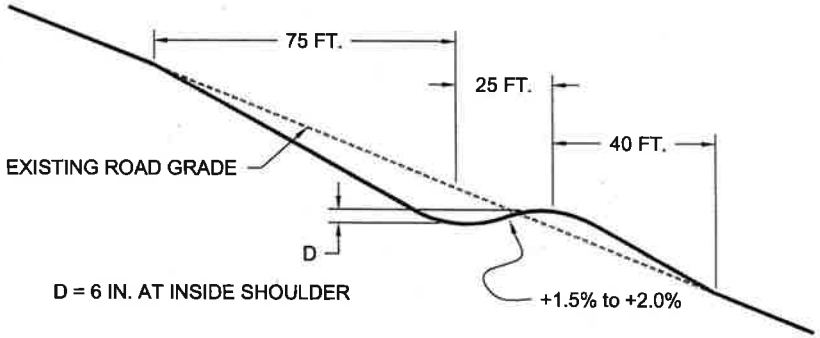

1. CONSTRUCTED DRAIN DIPS SHALL NOT HAVE PROTRUSIONS OR DEPRESSIONS GREATER THAN 2 IN. FROM THE TYPICAL SECTION --- (MOTOR GRADER FINISH).

2. SKEW TROUGH AND CREST OF THE DIP 10 DEGREES FROM PERPENDICULAR TO THE ROAD CENTERLINE.

3. CROSS DRAIN SLOPE OF THE DIP SHALL BE OUTSLOPED 5% TO 8%.

4. ALL DIP TRANSITIONS SHALL BE SHAPED SMOOTH AND UNIFORM AS DIRECTED.

5. CONSERVE ROCK FROM DIP EXCAVATION AND PLACE AT DIP OUTFALL TO SERVE AS ENERGY DISSIPATER.

6. UNLESS SHOWN OTHERWISE ON THE DRAWINGS, ON DITCHED ROADS DO NOT INTERCEPT THE DITCH LINE WITH THE DRAIN DIPS.

TYPICAL SECTIONS & GENERAL NOTES

GENERAL NOTES

1. ITEM 202(01) — ALL CORRUGATED METAL PIPE DESIGNATED FOR REMOVAL SHALL BECOME THE PROPERTY OF THE CONTRACTOR AND SHALL BE REMOVED FROM NATIONAL FOREST LANDS.

2. ITEM 306(01) — RECONDITION ROADBEDS TO A "MOTOR GRADER FINISH" — (SCARIFICATION NOT REQUIRED). SHAPE AND GRADE ALL EXISTING DRAIN DIPS AND DRAIN SAGS TO EFFECTIVELY DRAIN WATER FROM THE ROAD SURFACE (5% OUTSLOPE). DISPOSE OF WASTE, OVERSIZE, AND UNSUITABLE MATERIAL ALONG ADJACENT FILL SLOPES.

3. ITEM 625(02) — APPLY SEED, FERTILIZER, AND MULCH AT THE RATES SPECIFIED TO ALL DISTURBED AREAS OUTSIDE OF THE ROAD SHOULDER (INCLUDES FILL SLOPES, CUT SLOPES, DRAIN DIP OUTLETS, ETC.). CARE SHALL BE TAKEN NOT TO DISTRIBUTE ANY FERTILIZER INTO STREAMS.

CATCH BASIN & DITCH BLOCK TYPICAL

Not to Scale

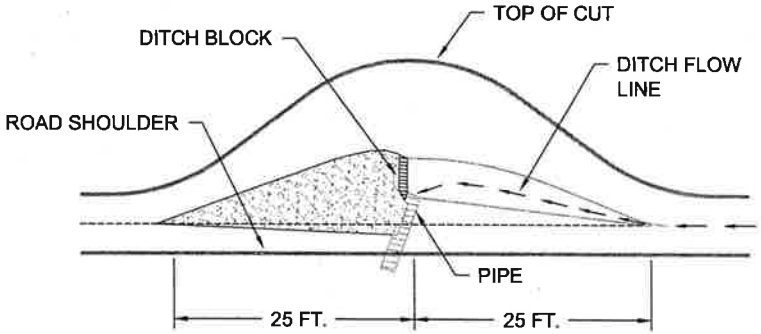

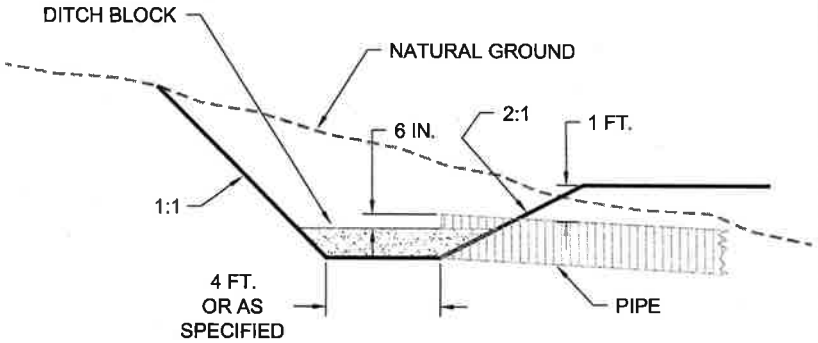

FOR ALL PIPE INSTALLATIONS, CONSERVE ROCK FROM THE PIPE AND/OR CATCH BASIN EXCAVATION AND PLACE AS RIPRAP AT PIPE INLETS & OUTLETS. ARMOR CATCH BASINS WHEN SHOWN ON THE DRAWINGS. (CONSERVING & PLACING RIPRAP IS CONSIDERED INCIDENTAL TO PIPE INSTALLATION).

TYPICAL SECTIONS & GENERAL NOTES

UNTREATED TIMBER WITH RUBBER BELT

Not to Scale

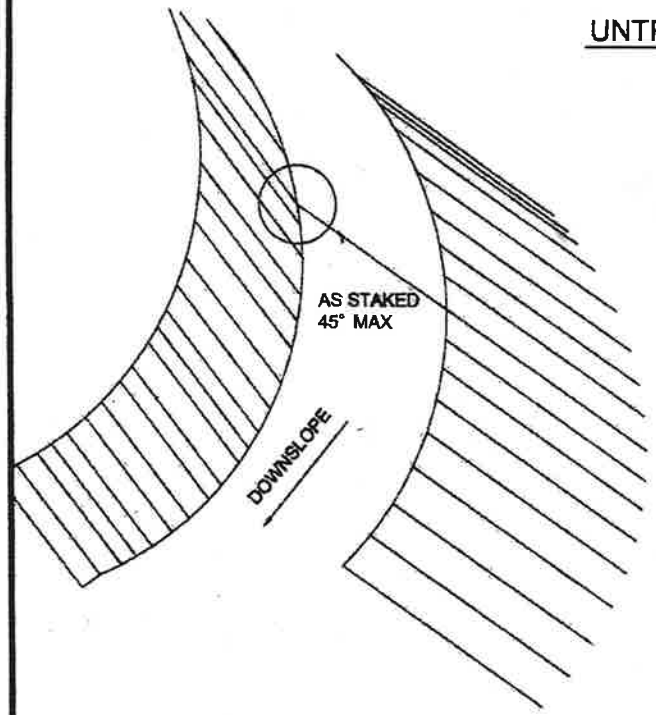

ELEVATION

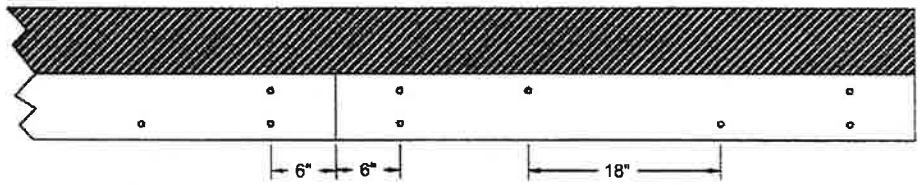

SECTION

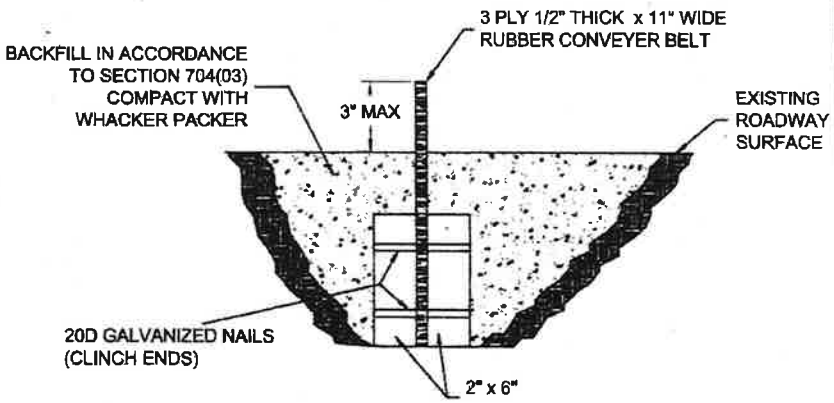

NOTES

1. ALL #2 LUMBER FOR RUBBER BELTS IS TO BE UNTREATED DUOUGLAS FIR OR WESTERN LARCH, S4S. 2 PIECES MAY BE USED ON EACH SIDE. MINIMUM LENGTH OF LUMBER IS 8 FEET, STAGGER JOINTS A MINIMUM OF 4 FEET.
2. ADJUST INSTALLATION ANGLE ON THE GROUND SO THE FULL LENGTH OF THE CROSS DRAIN IS UTILIZED, AND NO MORE THAN 6 INCHES EXTENDS BEYOND THE ROAD SHOULDER.
3. ALL BELTS ARE TO BE 3 PLY RATED AND 1/2" THICK AND BE INSTALLED WITHOUT SPLICES.

ROCK RETAINING WALL TYPICAL

(NOT TO SCALE) NFSR # 1621

NOTE: – HAUL AND PLACEMENT OF ROCK IS CONSIDERED INCIDENTAL TO CONSTRUCTION.

-- FILL MATERIAL REQUIRED FOR BACK FILL AND WIDENING OF ROAD MAY BE OBTAINED FROM ADJACENT CUT SLOPE.

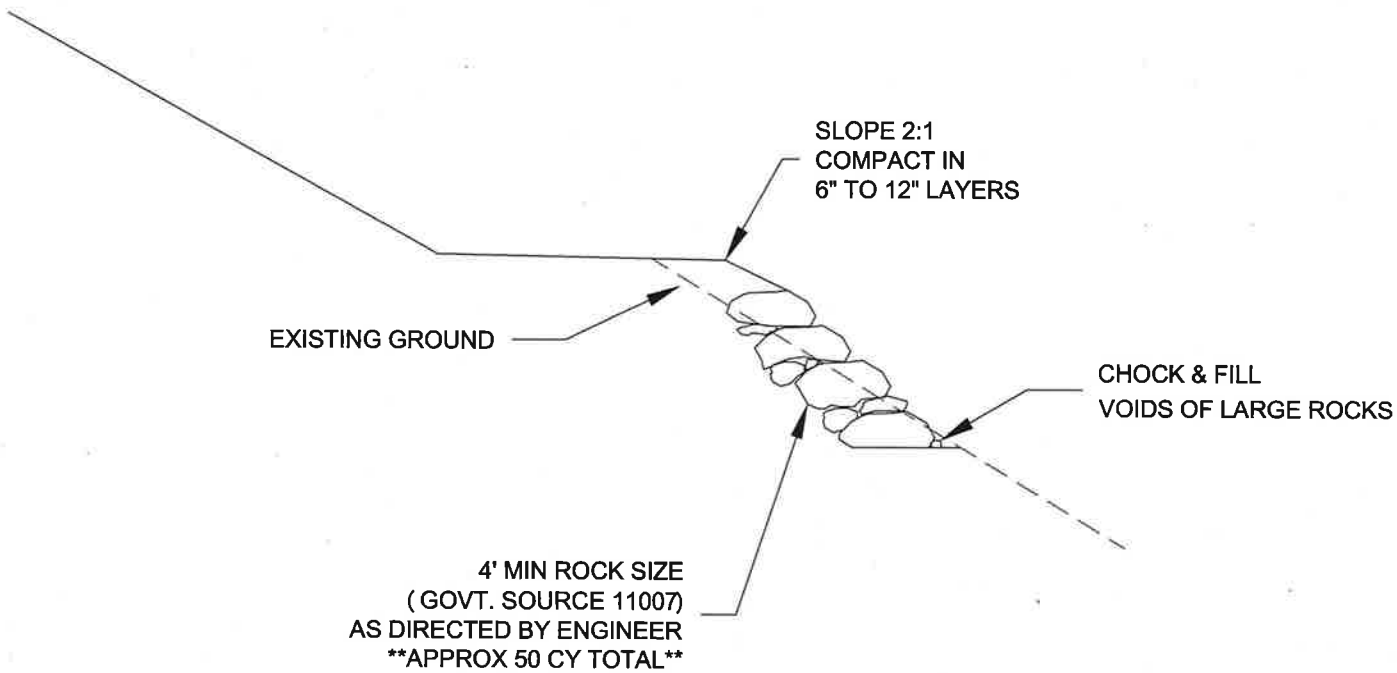

ROCK RETAINING WALL

(NOT TO SCALE) NFSR # 1621 MP. 2.564

0+10

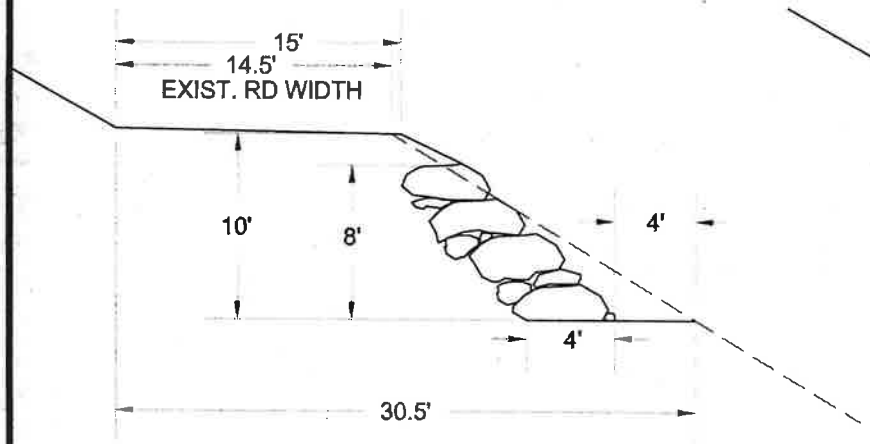

0+20

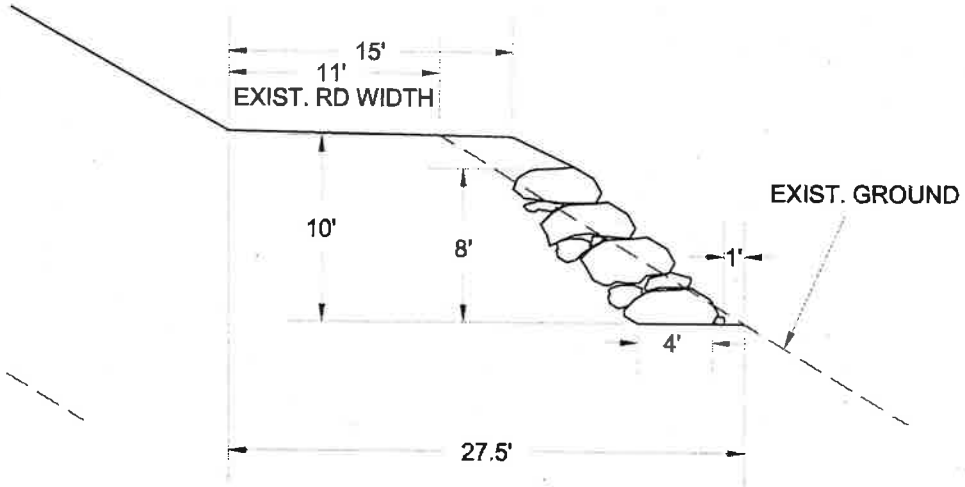

0+30

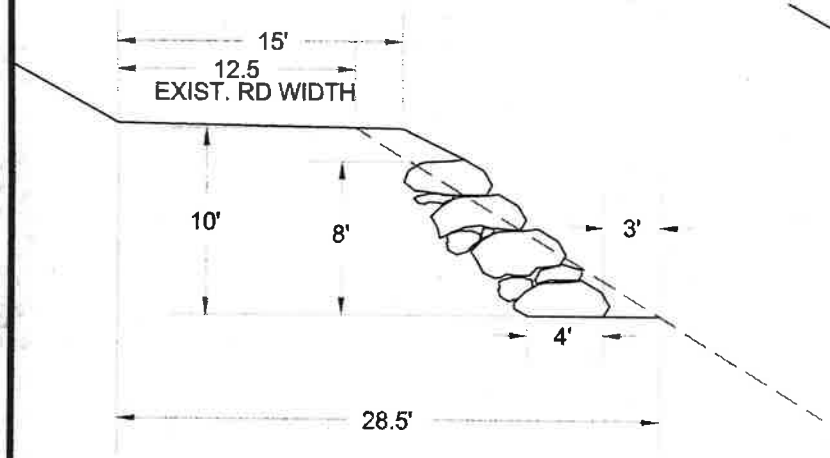

0+40

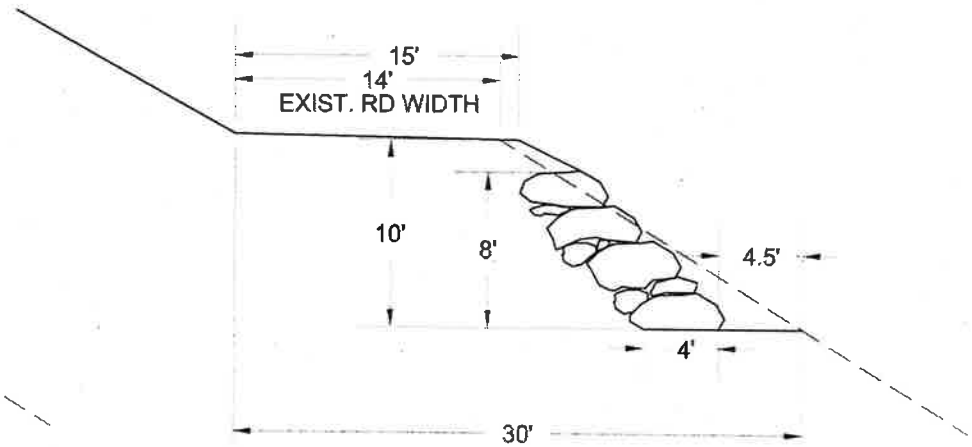

Tent Cr. Bridge Repair

NFSR 5317 MP 1.23

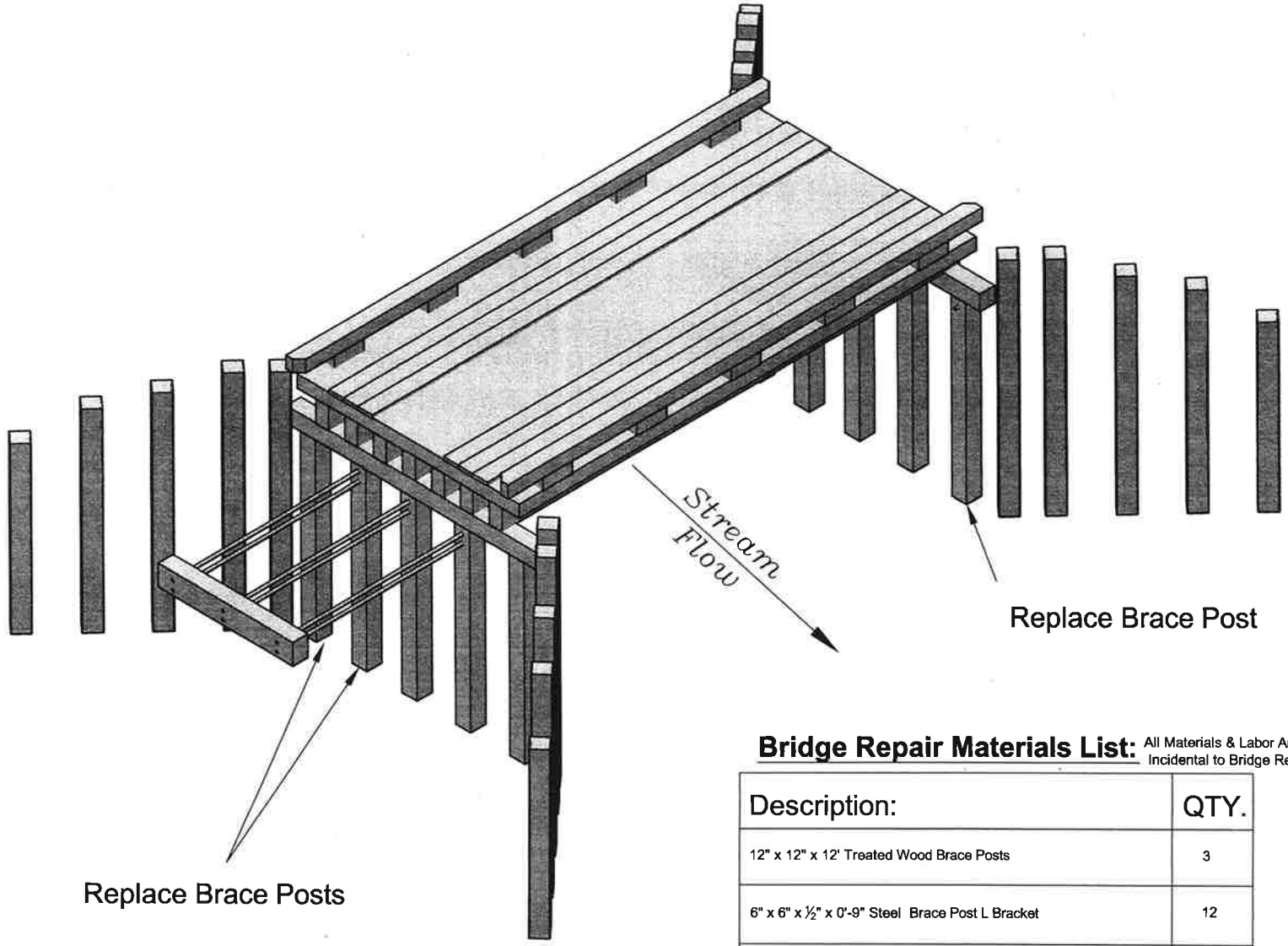

Bridge Repair Materials List: All Materials & Labor Are Incidental to Bridge Repair Pay Item

Description:	QTY.
12" x 12" x 12' Treated Wood Brace Posts	3
6" x 6" x ½" x 0'-9" Steel Brace Post L Bracket	12
¾" Ø x 4" Lag Bolts (*For L Bracket*)	48

Tent Cr. Bridge Repair

NFSR 5317 MP 1.23

Notes

-- All bridge work is to be completed prior to hauling or transporting heavy equipment across bridge.

-- Clearing And Constructing a Path To Access Brace Posts And Divert Stream Flow w/equiptment may be Required.

-- All Areas Disturbed By Bridge Repair Activity Shall be Rehabilitated As Directed By Engineer.

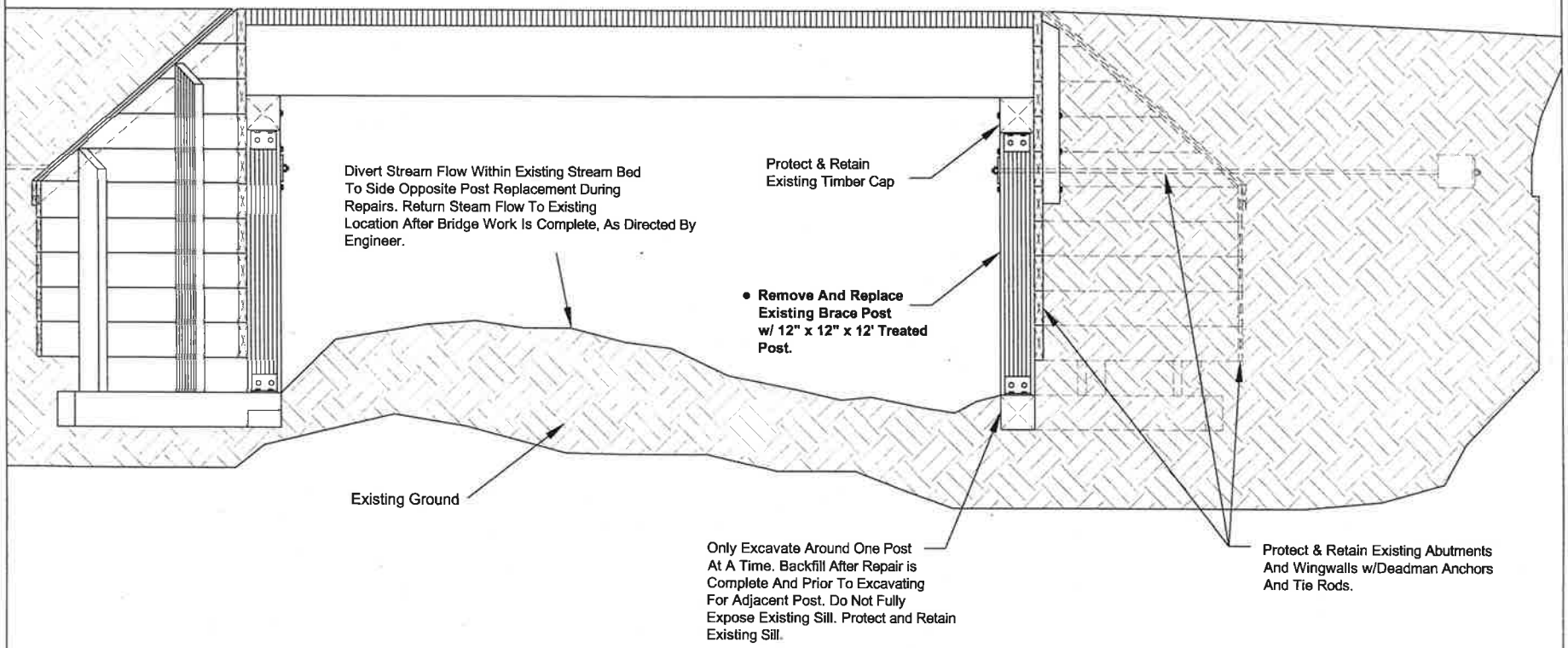

Tent Cr. Bridge Repair Details

NFSR 5317 MP 1.23

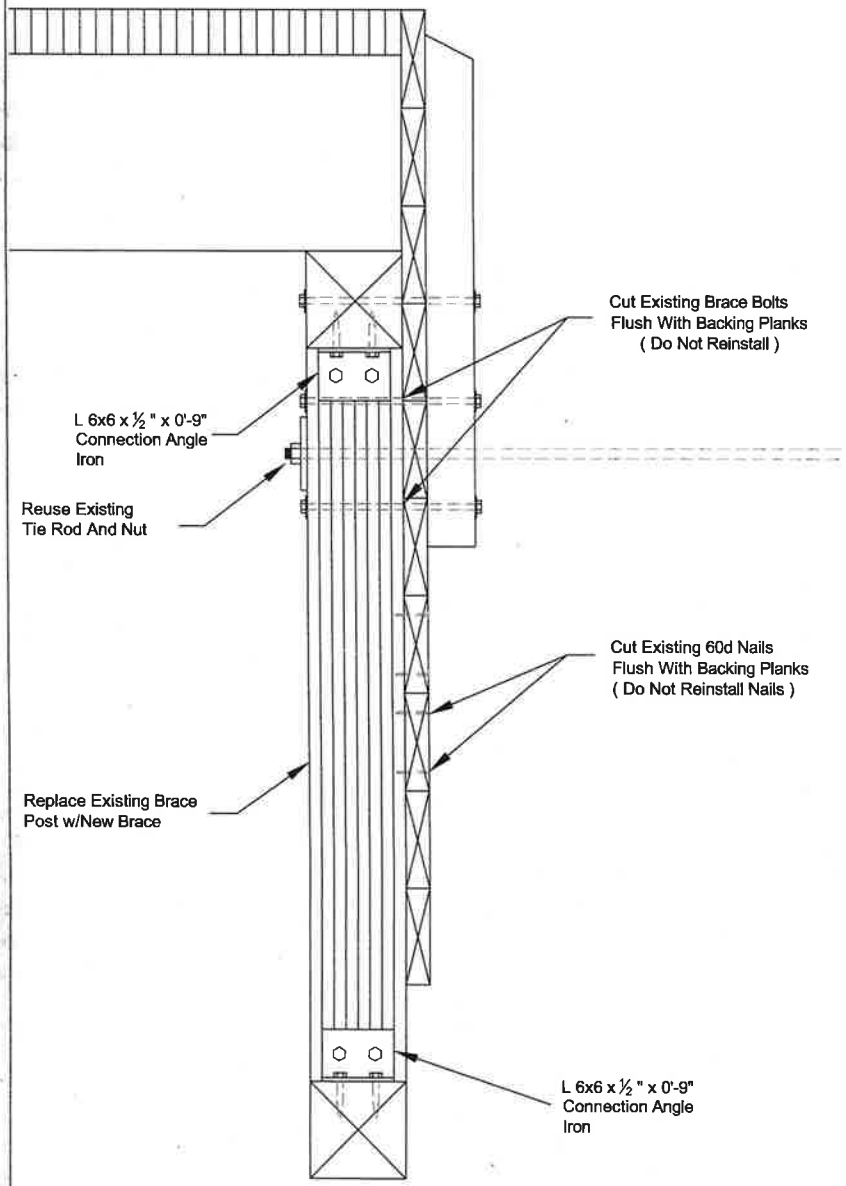

Brace Post Replacement Detail

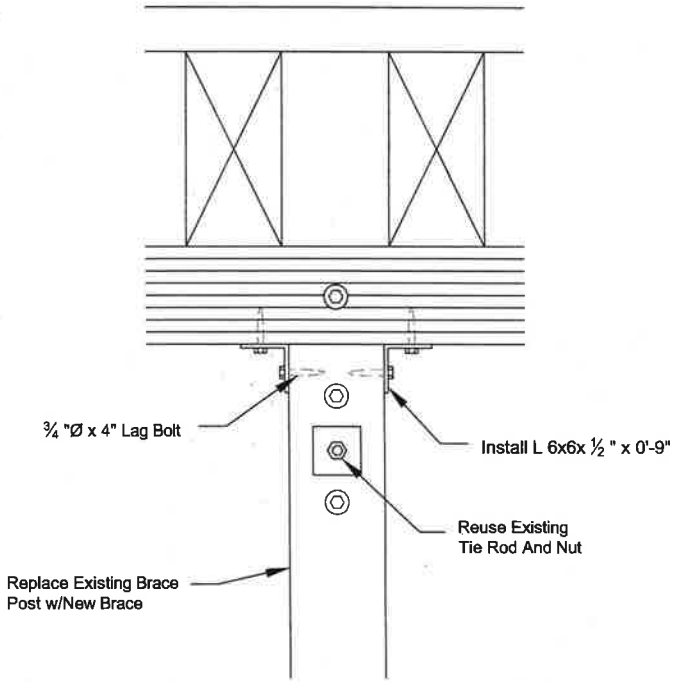

Brace Post Connection Detail

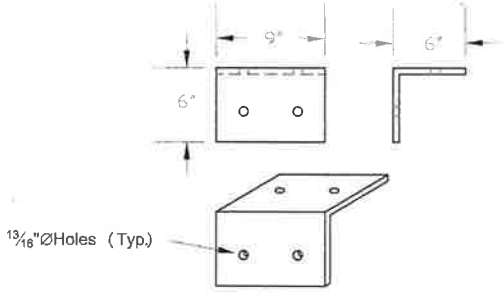

Brace Post L Bracket Detail

L 6" x 6" x ½ " x 0'-9"

RECONSTRUCTION ROAD LOG

PROJECT: FIRE FIGHTER ---------- ROAD #38B

MILE POST	WORK DESCRIPTION	203(17) Ditch	203(17) DS	203(17) DD	203(17) CB	203(08) Borrow	618(01) Clean CMP	603(01) 18" CMP					
0.00	BEGIN PROJECT — Junct. with Road #38												
0.017	Existing Gate (Preserve)												
0.080	Existing 18" CMP— Clean Inlet & Outlet Begin Pulling Ditch on Right						1						
0.085	Construct Drain Dip			1									
0.133	Construct Drain Dip			1									
0.157	Reconstruct Drain Sag — Outslope 4%		1										
0.210	Reconstruct Drain Sag — Outslope 4%		1										
0.226	Construct Drain Dip			1									
		1,267'											
0.233	Install 18" x 34' CMP — Skew 75 Construct Catch Basin & Ditch Block — (Rock Inlet & Outlet) Begin Reconstructing Ditch Conserve Excavation from Ditch To Be Used As Fill Over CMP Place 10 CY of Crushed Aggregate Over CMP(Govt.Source #11007).				1	10		34					
0.270	Existing 18" CMP— Clean Inlet & Outlet Reconstruct Catch Basin				1		1						
0.280	Construct Drain Dip			1									
0.320	Construct 30' Wing Ditch Left End Pulling Ditch on Right Begin Constructing Ditch on Left												
0.325	Construct Ditch Left — Construct Sag— Inslope 4% Remove Material on Road Shoulder to Allow Proper Drainange.	135'	1										
0.340	End Constructing Ditch on Left												
0.368	Construct Drain Dip			1									

RECONSTRUCTION ROAD LOG

PROJECT: FIRE FIGHTER ---------- ROAD #38B

MILE POST	WORK DESCRIPTION	203(17) Ditch	203(17) DS	203(17) DD	203(17) CB	203(08) Borrow	618(01) Clean CMP	603(01) 18" CMP					
0.480	Place 20 CY Borrow to Fill Depression in Road.					20							
0.516	Place 1 CY Rock to Armor Ditch on Right.					1							
0.535	Construct Drain Dip — Drain Left Construct 20' Outlet Ditch	20'		1									
0.650	Construct Drain Dip			1									
0.712	Construct Drain Dip			1									
0.787	****Rock Source****												
0.797	Construct Drain Dip			1									
0.849	Construct Drain Dip			1									
0.937	Construct Drain Dip			1									
0.996	Construct Drain Dip			1									
1.060	Existing 18" CMP — Clean Outlet						1						
1.083	Construct Drain Dip			1									
1.150	Construct Drain Dip			1									
1.243	Construct Drain Dip			1									
1.310	Construct Drain Dip			1									
1.367	Construct Drain Dip			1									
1.400	Existing 24" CMP — Clean Inlet & Outlet						1						
1.452	Reconstruct Drain Dip			1									
1.481	Reconstruct Drain Dip			1									
1.566	Construct Drain Dip			1									

RECONSTRUCTION ROAD LOG

PROJECT: FIRE FIGHTER ---------- ROAD #38B

MILE POST	WORK DESCRIPTION	203(17) Ditch	203(17) DS	203(17) DD	203(17) CB	203(08) Borrow	618(01) Clean CMP	603(01) 18" CMP					
1.610	****Rock Source****												
1.630	Reconstruct Drain Sag — Outslope 4%		1										
1.656	Construct Drain Dip			1									
1.728	Construct Drain Dip			1									
1.769	Construct Drain Dip			1									
1.822	Reconstruct Drain Dip			1									
1.878	Reconstruct Drain Dip			1									
1.892	Existing 18" CMP — Clean Inlet & Outlet						1						
1.919	Construct Drain Dip			1									
1.966	Construct Drain Dip			1									
2.010	Existing Rd 11050 Jct. Right												
2.044	Construct Drain Dip			1									
2.108	Construct Drain Dip			1									
2.120	Existing 18" CMP — Clean Outlet (Outlet Burried)						1						
2.138	Construct Wing Ditch off Switchback on Left Begin Pulling Ditch Left	190'											
2.174	End Pulling Ditch Left												
2.188	Reconstruct Drain Dip			1									
2.216	Construct Drain Dip			1									
2.344	Construct Drain Dip			1									
2.392	Reconstruct Drain Dip			1									

RECONSTRUCTION ROAD LOG

PROJECT: FIRE FIGHTER ---------- ROAD #38B

MILE POST	WORK DESCRIPTION	203(17) Ditch	203(17) DS	203(17) DD	203(17) CB	203(08) Borrow	618(01) Clean CMP	603(01) 18" CMP					
2.448	Reconstruct Drain Dip			1									
2.472	Construct Drain Dip			1									
2.543	End Project												
	ROAD #38B TOTALS												
	203(17) DITCH	1,612 LF											
	203(17)DS DRAIN SAG		4 EA										
	203(17)DD DRAIN DIP			35 EA									
	203(17)CB CATCH BASIN				2 EA								
	203(08) BORROW MATERIAL					31 Yd							
	618(01) CLEAN CMP						6 EA						
	603(01)18 --- 18" CMP							34 LF					

RECONSTRUCTION ROAD LOG

PROJECT: FIRE FIGHTER ---------- ROAD #896

MILE POST	WORK DESCRIPTION	201(02) Brushing	203(17) Ditch	203(17) DS	203(17) DD	203(17) CB	203(08) Class III	306(01) Recond.	618(01) Clean CMP	603(01) 18" CMP	603(01) 24" CMP	603(01) 36" CMP	603(01) 48" CMP
0.000	BEGIN PROJECT — Junct. with Road #38B & #38 Begin Road Reconditioning & Brushing	Road Brushing						Road Reconditioning					
0.014 (13.086)	Existing Gate — (Preserve)												
0.060 (13.040)	Existing 18" CMP — Clean Inlet / Outlet								1				
0.134 (12.966)	Construct Drain Dip— (Drain Left)				1								
0.160 (12.940)	Remove Existing 18" CMP Install 36" x 34' CMP — (Rock Inlet & Outlet)											34	
0.230 (12.870)	Reshape Existing Drain Sag — Outslope 4% (Drain Left)												
0.260 (12.840)	Remove Existing 18" CMP Install 36" x 44' CMP — (Rock Inlet & Outlet)											44	
0.299 (12.801)	Existing 18" CMP — Remove 6" Damaged Inlet												
0.300 (12.800)	Road Jct Right (#1621)												
0.358 (12.742)	Construct Drain Dip				1								
0.397 (12.703)	Construct Drain Dip				1								
0.450 (12.650)	Existing 18" CMP — Clean Inlet / Outlet								1				
0.490 (12.610)	Construct Drain Dip				1								
0.573 (12.527)	Reshape Existing Drain Sag — Outslope 4%												
0.678 (12.422)	Install 18" x 28' CMP Skew 45° Construct Catch Basin & Ditch Block — (Rock Inlet & Outlet)					1				28			

RECONSTRUCTION ROAD LOG

PROJECT: FIRE FIGHTER ---------- ROAD #896

MILE POST	WORK DESCRIPTION	201(02) Brushing	203(17) Ditch	203(17) DS	203(17) DD	203(17) CB	203(08) Class III	306(01) Recond.	306(01) Clean CMP	603(01) 18" CMP	603(01) 24" CMP	603(01) 36" CMP	603(01) 48" CMP
0.686 (12.414)	Construct Drain Dip	Road Brushing			1			Road Reconditioning					
0.710 (12.390)	Existing 18" CMP — Clean Inlet / Outlet								1				
0.770 (12.330)	Existing 18" CMP — Clean Inlet / Outlet								1				
0.800 (12.234)	Construct Drain Dip				1								
0.866 (12.234)	Construct Drain Dip Install 18" x 30' CMP Construct 10' Outlet Ditch—Aligned with Pipe Construct Catch Basin & Ditch Block — (Rock Inlet & Outlet)		10		1	1				30			
0.900 (12.200)	Remove Existing 18" CMP Install 36" x 52' CMP At Stream Grade—(Approx. 2' Below Existing)											52	
0.980 (12.120)	Construct Drain Dip Install 18" x 28' CMP Construct Catch Basin & Ditch Block — (Rock Inlet & Outlet)				1	1				28			
1.010 (12.090)	Remove Existing 36" CMP Install 48" x 56' CMP At Stream Grade—(Approx 6' Below Existing)												56
1.210 (11.890)	Remove Existing 18" CMP Install 18" x 30' CMP Construct Catch Basin & Ditch Block — (Rock Inlet & Outlet)					1				30			
1.310 (11.790)	Construct Drain Dip Install 18" x 40' CMP Construct Catch Basin & Ditch Block — (Rock Inlet & Outlet)				1	1				40			
1.330 (11.770)	Remove Existing 18" CMP Install 24" x 56' CMP At Stream Grade—(Approx 3' Below Existing)										56		
1.430 (11.670)	Existing 18" CMP — Clean Inlet / Outlet								1				

RECONSTRUCTION ROAD LOG

PROJECT: FIRE FIGHTER ---------- ROAD #896

MILE POST	WORK DESCRIPTION	201(02) Brushing	203(17) Ditch	203(17) DS	203(17) DD	203(17) CB	203(08) Class III	306(01) Recond.	618(01) Clean CMP	603(01) 18" CMP	603(01) 24" CMP	603(01) 36" CMP	603(01) 48" CMP
1.440 (11.660)	Junct. with Rd. #896A Left												
1.470 (11.630)	Construct Drain Dip—Drain Right				1								
1.550 (11.550)	Existing 18" CMP — Clean Inlet / Outlet								1				
1.580 (11.520)	Construct Drain Dip				1								
1.623 (11.477)	Construct Drain Dip				1								
1.700 (11.400)	Construct Drain Dip				1								
1.720 (11.380)	Remove Existing 18" CMP Install 24" x 32' CMP Construct Catch Basin & Ditch Block — (Rock Inlet & Outlet)	Road Brushing				1		Road Reconditioning			32		
1.751 (11.349)	Construct Drain Dip Install 18" x 32' CMP Construct Catch Basin & Ditch Block — (Rock Inlet & Outlet)				1	1				32			
1.800 (11.300)	Existing 18" CMP — Clean Inlet / Outlet								1				
1.869 (11.231)	Construct Drain Dip				1								
1.910 (11.190)	Existing 18" CMP — Clean Inlet / Outlet Reconstruct Catch Basin — (Rock Inlet & Outlet)					1			1				
1.990 (11.110)	Existing 18" CMP — Clean Inlet / Outlet Place 2 Cu Yd Rip Rap at Outlet						2		1				
2.010 (11.060)	Construct Drain Dip				1								

RECONSTRUCTION ROAD LOG

PROJECT: FIRE FIGHTER ---------- ROAD #896

MILE POST	WORK DESCRIPTION	201(02) Brushing	203(17) Ditch	203(17) DS	203(17) DD	203(17) CB	203(08) Class III	306(01) Recond.	618(01) Clean CMP	603(01) 18" CMP	603(01) 24" CMP	603(01) 36" CMP	603(01) 48" CMP
2.040 (11.060)	Install 18" x 36' CMP Construct Catch Basin & Ditch Block — (Rock Inlet & Outlet)					1				36			
2.090 (11.010)	Existing 18" CMP — Reconstruct Catch Basin					1							
2.125 (10.975)	Construct Drain Dip				1								
2.220 (10.880)	Existing 18" CMP Place 2 Cu Yd Rip Rap at Outlet						2						
2.227 (10.873)	Construct Drain Dip Install 18" x 36' CMP Construct Catch Basin & Ditch Block — (Rock Inlet & Outlet) Pull Ditch 50' Right		50		1	1				36			
2.300 (10.800)	Construct Drain Sag — Outslope 4%	Road Brushing		1				Road Reconditioning					
2.490 (10.610)	Reconstruct Drain Dip				1								
2.511 (10.511)	Construct Drain Dip				1								
2.690 (10.410)	Install 18" x 28' CMP Construct Catch Basin — (Rock Inlet & Outlet) Pull Ditch 40'		40			1				28			
2.747 (10.353)	Reconstruct Drain Sag — Outslope 4%			1									
2.787 (10.313)	Reconstruct Drain Sag — Outslope 4%			1									
2.856 (10.244)	Reconstruct Drain Sag — Outslope 4%			1									

RECONSTRUCTION ROAD LOG

PROJECT: FIRE FIGHTER ---------- ROAD #896

MILE POST	WORK DESCRIPTION	201(02) Brushing	203(17) Ditch	203(17) DS	203(17) DD	203(17) CB	203(08) Class III	306(01) Recond.	618(01) Clean CMP	603(01) 18" CMP	603(01) 24" CMP	603(01) 36" CMP	603(01) 48" CMP
2.880 (10.220)	Install 18" x 30' CMP					1				30			
	Construct Catch Basin — (Rock Inlet & Outlet)												
	Begin Pulling Ditch												
2.921 (10.179)	Construct Drain Dip				1								
2.969 (10.131)	Existing Drain Sag — Construct 5' Outlet Ditch		Pull Ditch 1,214'										
3.037 (10.063)	Construct Drain Dip				1								
3.095 (10.005)	Construct Drain Dip				1								
3.110 (9.990)	Junct. with Rd. #896D Right												
	End Pulling Ditch	Road Brushing						Road Reconditioning					
3.133 (9.967)	Construct Drain Dip				1								
3.226 (9.874)	Construct Drain Dip				1								
3.302 (9.798)	Construct Drain Dip				1								
3.400 (9.700)	Existing Gate — (Preserve)												
3.479 (9.621)	Construct Drain Dip				1								
3.500 (9.600)	Existing 18" CMP — Clean Inlet / Outlet								1				
3.550 (9.550)	Construct Drain Dip				1								

RECONSTRUCTION ROAD LOG

PROJECT: FIRE FIGHTER ---------- ROAD #896

MILE POST	WORK DESCRIPTION	201(02) Brushing	203(17) Ditch	203(17) DS	203(17) DD	203(17) CB	203(08) Class III	306(01) Recond.	618(01) Clean CMP	603(01) 18" CMP	603(01) 24" CMP	603(01) 36" CMP	603(01) 48" CMP
3.580 (9.520)	Existing 18" CMP — Clean Inlet / Outlet	Road Brushing						Road Reconditioning	1				
3.640 (9.460)	Junct. with Rd. #11042 Left												
3.700 (9.400)	Construct Drain Dip				1								
3.890 (9.210)	Existing 18" CMP — Clean Inlet / Outlet								1				
3.909 (9.191)	Reconstruct Drain Sag — Outslope 4%			1									
3.950 (9.150)	Existing 18" CMP — Clean Inlet / Outlet								1				
4.004 (9.096)	Reshape Drain Dip												
4.106 (8.994)	Reconstruct Drain Dip				1								
4.170 (8.930)	Junct. with Rd. #896E Right Existing 18" CMP — Reconstruct Catch Basin					1							
4.194 (8.906)	Reconstruct Drain Dip				1								
4.230 (8.870)	Construct Drain Dip				1								
4.233 (8.867)	Install 18" x 36' CMP Construct Catch Basin & Ditch Block — (Rock Inlet & Outlet)					1				36			
4.270 (8.830)	Existing 18" CMP — Clean Inlet / Outlet								1				

RECONSTRUCTION ROAD LOG

PROJECT: FIRE FIGHTER ---------- ROAD #896

MILE POST	WORK DESCRIPTION	201(02) Brushing	203(17) Ditch	203(17) DS	203(17) DD	203(17) CB	203(08) Class III	306(01) Recond.	618(01) Clean CMP	603(01) 18" CMP	603(01) 24" CMP	603(01) 36" CMP	603(01) 48" CMP
4.320 (8.780)	Existing 18" CMP — Clean Inlet / Outlet	Road Brushing						Road Reconditioning	1				
4.370 (8.730)	Reconstruct Drain Sag — Outslope 4%			1									
4.420 (8.680)	Existing 18" CMP — Clean Inlet / Outlet								1				
4.522 (8.578)	Construct Drain Dip				1								
4.550 (8.550)	Existing 18" CMP — Clean Inlet / Outlet								1				
4.600 (8.500)	Construct Drain Dip				1								
4.650 (8.450)	Existing 18" CMP — No Work Needed												
4.720 (8.380)	Existing 18" CMP — Clean Inlet / Outlet								1				
4.722 (8.378)	Construct Drain Dip				1								
4.740 (8.360)	Existing 48" CMP — Clean Inlet / Outlet								1				
4.760 (8.340)	Remove Existing 24" CMP Install 24" x 30' CMP										30		
4.810 (8.290)	Existing 57" x 33' CMP — No Work Needed												
4.825 (8.275)	Construct Drain Dip				1								