BATTLE THIN STWD

LIST OF INCLUDED ROAD MAINTENANCE SPECIFICATIONS

Pursuant to K-F.3.1# - Road Maintenance Requirements (09/2004)

Region 6

SPEC#	SUBJECT DESCRIPTION	DATE
T-811	Blading	10/07/2007
T-813	Surfacing	10/07/2007
T-831	Ditch Maintenance	10/07/2007
T-832	Remove And End Haul Materials	05/07/2007
T-834	Drainage Structure Maintenance	10/07/2007
T-838	Maintenance for High Clearance Vehicle Use	05/07/2007
T-839	Maintenance for Project Use	05/07/2007
T-841	Vegetation Establishment	05/07/2007
T-842	Cutting Roadway Vegetation	10/07/2007
T-851	Logging Out	05/07/2007
T-854	Treatment and Disposal of Danger Trees	05/07/2007

Siuslaw National Forest

SPEC#	SUBJECT DESCRIPTION	DATE
T-835-F12-1	Posthaul Roadway Drainage Maintenance	8/99
T-835-F12-2	Posthaul Roadway Drainage Maintenance	7/02
Road Closure - Earth Mound Typical		
Drainage Construction Details		
Water Bar Placement and Construction Guide		2/23/98

T-811 BLADING (10/07)

811.01 Description

This work consists of surface blading the traveled way to a condition that facilitates traffic and provides proper drainage. Blading includes shaping the crown or slope of travel way, berms, and drainage dips in accordance with this specification. Compaction is required when shown on the ROAD LISTING.

811.02 Maintenance Requirements

A. Timing - Perform surface blading during the contract period as often as needed to conditions stated for the maintenance level of the road.

B. General

1. Blade and shape the existing traveled way and shoulders, including turnouts, to produce a surface which is uniform, consistent to grade, and crowned or cross-sloped as indicated by the character of the existing surface, unless otherwise shown in the ROAD LISTING, to at least ½ inch per 1 foot of width, but not more than ¾ inch per 1 foot of width. Thoroughly loosen surfacing material to no less than 2 inches depth or the depth of potholes or corrugations. Scarification to facilitate cutting to the full depth of potholes or corrugations may be elected, but will be considered incidental to blading. Do not scarify to a depth that will cause contamination of the surfacing.

2. Apply water during blading when sufficient moisture is not present to prevent segregation. Supply, haul, and apply water in accordance with Section T-891.

3. Shape existing native rock or aggregate surfaced drainage dips to divert surface runoff to existing outlet devices, ditches, or discharge locations.

4. Establish a blading pattern which provides a uniform driving surface, retains the surfacing on the roadbed, and provides a thorough mixing of the materials within the completed surface width. Upon final blading, no disturbed rock shall protrude more than 2 inches above the adjacent surface unless otherwise provided in the contract. Remove and place outside the roadbed, material not meeting this dimension so as not to obstruct drainage ways or structures. This material may be scattered off the roadbed if there is free drainage.

5. Where DESIGNATED ON THE GROUND, included in the ROAD LISTING, SHOWN ON THE DRAWINGS or as ordered by the Contracting Officer invasive species of concern prevention practices shall be followed as listed below.

Invasive Species of Concern Prevention Practices
Unless otherwise directed, avoid blading through infestations of Scotch broom and blackberry marked on the ground by the Forest Service prior to maintenance activities

T-811 Blading - continued

C. Routine Blading

1. Conform to the dimensions SHOWN ON THE DRAWINGS or designated in the SUPPLEMENTAL SPECIFICATIONS upon completion of blading.

2. Shape roadbed width in excess of the dimensions shown only as needed to provide drainage away from the traveled way. Do not remove established grasses and other vegetation from the excess width except as incidental to providing drainage or unless otherwise provided in the contract.

D. Compaction

Roads requiring compaction will be included in the ROAD LISTING. Unless Compaction Method B is designated in the ROAD LISTING, all traveled ways compaction may be compacted by Method A. Compaction shall commence immediately following blading. Compaction methods are:

Compaction Method A: Breaking track while operating equipment on the traveled way.

Compaction Method B: 7-10 ton pneumatic, steel, or equivalent vibratory roller, operated to cover the full width two (2) times.

E. Undercutting - Undercutting roadway back slope is not permitted.

F. Intersections

1. At intersections, blade the roadbeds of side roads which are not closed or restricted from vehicular use to ensure smooth transitions.

2. Signing, cross ditching in the road surface (traveled way), earth berms, or other devices placed to discourage or eliminate use by passenger cars, are field evidence of road closure or restriction. Roads listed for work under Sections T-835, T-836, T-838, or T-839 are considered restricted.

3. Side roads listed for work under this Section are not restricted.

G. Cleaning of Structures - Do not allow materials resulting from work under this Section to remain on or in structures, such as bridges, culverts, cattle guards, or drainage dips.

H. Berms - Maintain existing berms to the condition of adjacent segments. Do not new berms.

I. Smooth Blading - Smooth blading may be used as an interim measure to remove loose surfacing material from the wheel paths, and store removed materials in a recoverable windrow, until blade processing as described in this section is feasible. Watering will not be required for smooth blading. Accomplish smooth blading without distorting the existing cross-slope or crown of the traveled way.

Move and store loose surfacing materials on the high side of super-elevated curves and sections with uniform inslope or outslope. In crowned sections, store the material on either or both sides as elected. Windrow and place stored materials to provide not less than 12 feet of smooth traveled way on one-lane segments, or 20 feet of smooth traveled way on two-lane segments, or segments with turnouts. Cut holes through windrows, which may collect water on the road, for drainage at least every 500 feet.

T-813 SURFACING (10/07)

813.01 Description

This work consists of placing surface aggregate as DESIGNATED ON THE GROUND, or as ordered by the Contracting Officer. It includes preparing the area, furnishing, hauling, and placing all necessary materials and other work necessary to blend with the adjacent road cross section.

813.02 Materials

A. Materials will be Government-furnished when stated in the supplemental specifications.

B. Materials furnished by the Contractor shall conform to the gradation and quality requirements of Section 703 of the "Standard Specifications for Construction of Roads and Bridges on Federal Highway Projects FP-03 U.S. Customary Units" and FS supplements to the FP-03.

C. All materials transported onto National Forest System land shall be free of invasive species of concern. Written documentation of methods used to determine the invasive species of concern free status of any and all materials furnished by the Contractor shall be submitted to the Contracting Officer before transport of any materials onto National Forest System land.

The Contracting Officer shall have 5 days, excluding weekends and Federal holidays, to review the methods and inspect the materials after the required written documentation is provided by the Contractor. After satisfactory review and inspection or after such 5 day period, the Contractor may transport the material onto National Forest System land.

Material or methods appropriate for establishing invasive species of concern free status for the particular invasive species of concern are listed below.

Invasive Species of Concern and Acceptable Methods specific to this project:

Invasive Species of Concern	**Acceptable Methods**
Not Applicable	

813.03 Maintenance Requirements

A. Thoroughly loosen the area to be surfaced to a minimum depth of 1 inch prior to placement of aggregate.

B. Mixing and Placing

When scheduled coincidentally with work under Section T-811, and included in the SUPPLEMENTAL SPECIFICATIONS, mix surfacing and existing aggregate with water until a uniform mixture is obtained prior to final shaping and compaction.

Otherwise, spread the material on the prepared area in layers no more than 4 inches in depth. When more than one (1) layer is required, shape and compact each layer before the succeeding layer is placed. Upon completion, the surfacing shall reasonably conform to the adjacent cross section and provide smooth transitions in the road profile.

T-813 Surfacing - continued

Compaction Methods:

Compaction Method A: Breaking track while operating equipment on the traveled way.

Compaction Method B: 7-10 ton pneumatic, steel, or equivalent vibratory roller, operated to cover the full width two (2) times.

Either Method A or B may be used unless Method B is designated in the ROAD LISTING.

T-831 DITCH MAINTENANCE (10/07)

831.01 Description

This Section provides for routine maintenance of various types of ditches to provide a waterway which is unobstructed, as shown on the ROAD LISTING or DESIGNATED ON THE GROUND.

831.02 Maintenance Requirements

A. Maintain ditches by removing rock, soil, wood, and other materials. Maintained ditches shall function to meet the intent of the original design.

B. Undercutting backslopes during removal operations is not permitted.

C. Suitable material up to 4 inches in greatest dimension removed from the ditches may be blended into existing native road surface and shoulder or placed in designated berm.

D. Do not blend material from ditch cleaning operations into aggregate surfaced roads. Do not blade material across aggregate or bituminous surfaced roads, unless approved in writing by the Contracting Officer.

E. Haul material in excess of 831.02 D or subject to 831.02 E to a designated waste area under Section T-832. Remove excess materials temporarily stored on the ditch slope or edge of the shoulder daily.

F. Remove limbs and wood chunks in excess of 12 inches in length or 3 inches in diameter from ditches and place outside the roadway.

G. Clean paved surfaces of all materials resulting from ditch maintenance work.

H. Shape lead-off ditches to drain away from the traveled way.

I. Where DESIGNATED ON THE GROUND, included in the ROAD LISTING, SHOWN ON THE DRAWINGS or as ordered by the Contracting Officer invasive species of concern prevention practices shall be followed as listed below.

Invasive Species of Concern Prevention Practices
Unless otherwise directed, avoid working in infestations of Scotch Broom and Blackberry marked on the ground by the Forest Service prior to maintenance activities.

T-832 REMOVE AND END HAUL MATERIALS (05/07)

832.01 Description

Work consists of loading, hauling, and placing of slide, slough, or excess materials such as rock, soil, vegetation, and other materials to designated disposal sites.

832.02 Maintenance Requirements

A. Remove, end haul, and dispose of excess materials generated by work under other Sections of this contract.

B. Remove the slide and slough materials in the area extending approximately 6 feet vertically above the road surface and not more than 3 feet down slope from the roadbed. Dispose of material at designated sites as SHOWN ON THE DRAWINGS, identified in SUPPLEMENTAL SPECIFICATIONS, or as ordered by the Contracting Officer.

   Reshape the slope which generated the slide material as nearly as practical to its original condition by equipment operating from road surface. Reshaping of roadside ditches in slide area shall be in accordance with Section T-831.

C. When approved by the Contracting Officer, fill slumps by compacting selected materials into roadway depressions. Compaction is by Method 2.

D. Place all materials in disposal sites as specified in the SUPPLEMENTAL SPECIFICATIONS, as SHOWN ON THE DRAWINGS, or as ordered by the Contracting Officer.

   1. Method 1 - Side Casting and End Dumping. Material may be placed by side casting and end dumping. Where materials include large rocks, provide a solid fill by working smaller pieces and fines into voids. Shape the finished surfaces to drain.

   2. Method 2 Layer Placement - Step or roughen surfaces on which materials are to be placed prior to placing any material. Place materials in approximately horizontal layers no more than 12 inches thick. Compact each layer by operating hauling and spreading equipment over the full width of each layer.

E. Repair any damage to existing aggregate or pavement surfaces.

T-834 DRAINAGE STRUCTURE MAINTENANCE (10/07)

834.01 Description

This work consists of cleaning and reconditioning culverts and other drainage structures.

834.02 Maintenance Requirements

A. Clean drainage structures, inlet structures, culverts, catch basins, and outlet channels specified in the SUPPLEMENTAL SPECIFICATIONS. Clean catch basins by removing the material within the area SHOWN ON THE DRAWINGS.

B. Clean the transition from the ditch line to the catch basin a distance of 10 feet from the catch basin. Clean outlet channels and lead-off ditches a distance of 6 feet. Remove and place debris and vegetation so as to not enter the channel or ditch, or obstruct traffic. Haul debris and vegetation to a designated disposal area in accordance with Section T-832.

C. Hydraulic flushing of drainage structures is not allowed unless provided for in the SUPPLEMENTAL SPECIFICATIONS.

D. Cleaning and reconditioning are limited to the first 3 feet of inlet and outlet, determined along the top of the structure. Recondition culvert inlet and outlet by field methods such as jacking out or cutting away damaged metal which obstructs flow. Treat cut edges with a zinc rich coating, in accordance with AASHTO M 36M and ASTM A 849.

E. Where DESIGNATED ON THE GROUND, included in the ROAD LISTING, SHOWN ON THE DRAWINGS or as ordered by the Contracting Officer invasive species of concern prevention practices shall be followed as listed below.

Invasive Species of Concern Prevention Practices
Unless otherwise directed, avoid working in infestations of Scotch Broom and Blackberry marked on the ground by the Forest Service prior to maintenance activities.

T-838 MAINTENANCE FOR HIGH CLEARANCE VEHICLE USE (05/07)

838.01 Description

This work consists of making limited use roads passable for project use by Contractor and providing drainage from the traveled way and roadbed.

838.02 Maintenance Requirements

A. Traveled Way

Contractor may smooth or fill existing cross ditches and water bars and as approved by the Contracting Officer modify existing road junctions to enable vehicle access. The Contractor may perform the following work prior to beginning haul and resumption of haul after an extended stoppage:

1. Remove brush, fallen trees, rocks, and other debris from traveled way, including turnouts, turnarounds, and other locations that interfere with needed maintenance as follows:

   a. No object extending over 4 inches above the road surface shall remain within the 12 feet usable traveled way. Center the usable width on the roadbed or position away from the fill slope.

   b. Cut and remove standing or down trees, logs, brush, and limbs from within the area described in 1(a). Remove encroaching limbs to a height of 14 feet above the traveled way surface. Scatter material not meeting utilization standards outside and below the roadbed on the fill side. Limb and remove timber that meets utilization standards or deck at locations approved by the Contracting Officer.

   c. Place all removed materials away from drainages.

   d. During use, maintain drainage structures including dips, ditches and culverts in a usable condition.

2. Clean and recondition drainage facilities in accordance with Section T-831 and T-834.

B. Slough and Slides

1. Slough and slides may be left in place, provided surface drainage is provided and at least 12 feet of width is available for vehicle passage.

2. Contractor may reposition or ramp over slides and slough when the traveled way width is less than 12 feet providing the material is capable of supporting vehicles. Limit out slope to no more than six percent.

3. Reposition slough or slide materials, which are not capable of supporting a vehicle, on the roadbed to provide the 12 feet width. When directed by the Contracting Officer, slough or slide material will be removed under Section T-832.

T-838 Maintenance For High Clearance Vehicle Use - continued

C. Slumps and Washouts

1. Drain the roadbed immediately upgrade of slumps and longitudinal cracks to prevent water from entering slump area.

2. Slumps and longitudinal cracks at the edge of the roadbed shall not be considered a part of the usable width. Usable width may be reduced to 10 feet in the area of the slump.

3. Unless the Contracting Officer approves material being placed on slumps, ramp the slumps on both ends into undisturbed roadbed to provide at least 10 feet usable width. Use removed materials to guide vehicles to the ramp location or to aid in draining the area.

4. Washouts may be filled with suitable material.

D. Post haul

At the end of hauling or prior to entering into seasonal shutdowns or a period of extended inactivity:

1. Shape the traveled way and disturbed roadbed to provide functional drainage.

2. Reinstall removed cross ditches and water bars and provide any additional drainage structures necessary to offset changes caused through use and maintenance.

3. Leave roads useable for high clearance vehicles. Remove or reshape Contractor modifications at road junctions to leave the entrance as it was before use, or as agreed at the time of improvement.

T-839 MAINTENANCE FOR PROJECT USE (05/07)

839.01 Description

Work consists of providing minimum access required for Contractor's Operations and associated Forest Service contract administration and preventing unacceptable resource or road damage.

839.02 Maintenance Requirements

A. Contractor is authorized to perform the following maintenance to provide vehicle passage and drainage:

1. Removing log, earth, and rock barriers and/or improving existing road junctions to enable vehicle access as mutually agreed.

2. Smoothing or filling existing cross ditches and water bars.

3. Installing Contractor-furnished culverts or other temporary drainage structures for shallow stream crossings as approved by the Contracting Officer.

4. Removing brush, fallen trees, rocks, and other materials from the traveled way and other locations that interfere with needed maintenance:

   a. Place all removed materials away from drainages.

   b. Limb and remove timber which meets utilization standards or deck at locations approved by the Contracting Officer. Scatter other woody materials, including limbs, off of and below the roadbed without creating concentrations.

5. Clean and recondition drainage structures in accordance with Section T-831 and Section T-834.

6. Reposition or ramp over slough and slides to provide adequate width of traveled way material.

7. Provide traveled way drainage above slumps and seal cracks in slump area. Ramp the slumps on both ends into undisturbed roadbed to provide usable width unless otherwise ordered by the Contracting Officer.

B. During use, the traveled way shall not channel water along the road. Prior to seasonal periods of anticipated rains and runoff, perform the following work:

1. Shape the traveled way and roadbed to drain.

2. Reinstall removed cross ditches and water bars and provide any additional drainage structures necessary to offset changes through use and maintenance.

3. Perform work outlined in 839.02 A (5), (6), and (7).

4. During periods of non use, replace original barrier or provide and maintain standard MUTCD, Type 3, barricades unless alternate type barriers are approved by the Contracting Officer.

T-839 Maintenance For Project Use - continued

839.03 Post Haul Requirements

A. Upon completion of project use perform such work as needed to reasonably conform to the character of the existing road prior to Contractor's maintenance for project use, unless otherwise provided in the SUPPLEMENTAL SPECIFICATIONS or the Road Listing. Work shall be in addition to requirements of 839.02 B and in accordance with 839.03 B and C.

B. Roads designated in the Road Listing to be blocked shall conform to the requirements of Section T-835. Unless otherwise approved by the Contracting Officer, remove Contractor-installed temporary structures from National Forest System land. Associated commercially-obtained materials shall remain the property of the Contractor.

C. Remove or reshape Contractor improvements at road junctions, as approved by the Contracting Officer at the time of improvement.

T-842 CUTTING ROADWAY VEGETATION (10/07)

842.01 Description

This work consists of cutting all vegetative growth, including trees and other vegetation less than 4 inches in diameter measured 6 inches above the ground, on roadway surfaces and roadsides.

842.02 Maintenance Requirements

A. General

1. Cut brush, trees, and other vegetation within each area treated to a maximum height of 6 inches above the ground surface or obstruction such as rocks or existing stumps. When work is performed under this Section, remove all limbs which extend into the treated area, or over the roadbed, to a height of 14 feet above the traveled way surface elevation.

2. Items to remain will be DESIGNATED ON THE GROUND.

3. Work may be performed either by hand or mechanically unless specifically shown in the Road Listing. Self-propelled equipment is not allowed on cut and fill slopes or in ditches.

4. Correct damage to trunks of standing trees caused by Contractor's operation either by treatment with a commercial nursery sealer or by removing the tree as directed by the Contracting Officer.

5. Limb trees within the cutting limits which are over 4 inches -measured at 6 inches above the ground in lieu of cutting.

6. When trees are limbed, cut limbs within 4 inches of the trunk.

B. Cutting Side Vegetation

1. Show the width of vegetation to be removed in the Road Listing.

2. Unless otherwise included in the SUPPLEMENTAL SPECIFICATIONS or DESIGNATED ON THE GROUND:

   a. Commence work at the edge of the traveled way and proceed away from the road centerline.

   b. Roads without a defined traveled way: The starting point for cutting will be marked on the ground or defined in the SUPPLEMENTAL SPECIFICATIONS.

3. The points for establishing cutting limits are as follows:

   a. Fill and daylighted (wide roadbed) section cutting commences at the edge of the traveled way and proceeds away from the road center line.

   b. Drainage ditched section cutting commences at the bottom of the existing ditch and proceeds away from the road center line. Cutting on ditch foreslopes is not required.

c. Unditched cut section cutting commences at the intersection of the cutbank and the roadbed and proceeds away from center line.

4. Provide transitions between differing increments of cutting width. Accomplish transitions in a taper length of not less than 50 feet nor more than 70 feet.

C. Debris

1. Materials resulting from the cutting operation in excess of 12 inches in length or 3 inches in diameter is not allowed to remain on roadway slopes within the treated area, in ditches, or within water courses.

2. Remove limbs and chunks in excess of 3 inches in any dimension from the traveled way and shoulders.

3. Materials may be scattered down slope from the roadbed, outside of the work area and drainages unless otherwise listed in D. Invasive Species of Concern.

D. Invasive Species of Concern

Where DESIGNATED ON THE GROUND, included in the ROAD LISTING, SHOWN ON THE DRAWINGS or as ordered by the Contracting Officer invasive species of concern prevention practices shall be followed as listed below.

Invasive Species of Concern Prevention Practices
Not Applicable

T-851 LOGGING OUT (5/07)

851.01 Description

This work consists of removal of fallen trees and snags which encroach into the roadway or the 3 feet of roadside abutting the roadway on the cut side.

851.02 Maintenance Requirements

A. Limb and remove timber which meets Utilization Standards, or deck at locations designated by the Contracting Officer.

B. Limb other material cut into lengths for handling. Deck outside ditches and drainages, off the traveled way and turnouts, or at staked locations. The clearing width is to the edge of the roadway for public use roads, except limited use roads. The clearing width for limited use roads is shown in the specifications.

C. Notwithstanding C(T).3, blowdown timber outside Contract Area required to be removed, which meets Utilization Standards in A(T).2, when designated by the Contracting Officer is Included Timber subject to requirements of C(T).2.

D. Do not leave woody debris and slash in excess of 12 inches in length or 3 inches in diameter, or concentrations which may plug ditches or culverts, in ditches, drainage channels, or on backslopes, traveled way, shoulders, or turnouts.

T-854 - TREATMENT AND DISPOSAL OF DANGER TREES (5/07)

854.01 Description

This work consists of felling and disposal of designated live or dead danger trees sufficiently tall to reach roads used by the Contractor. Any removal of logs is subject to prior agreement between the Contractor Officer and the Contractor.

854.02 Requirements

A. Designation of danger trees.

Danger trees to be felled will be designated in advance by the Contracting Officer. Trees to be removed will be Marked.

B. Falling, bucking and treatment for disposal.

Use controlled felling to ensure the direction of fall and prevent damage to property, structures, roadway, residual trees, and traffic. Stump heights, measured on the side adjacent to the highest ground, must not exceed 12 inches or 1/3 of the stump diameter, whichever is greater. Higher stump heights are permitted when necessary for safety.

Felled snags and trees, which are not Marked for removal, will be left in a stable condition such that they will not roll or slide. Position logs away from standing trees so they will not roll, are not on top of one another, and are located out of roadway and drainage structures.

Fell, limb and, remove trees, which are Marked for removal, that equal or exceed the utilization standards as listed in the Timber Contract or SUPPLEMENTAT SPECIFICATIONS. Dispose of merchantable timber designated for removal in accordance with C(T).3.2 Construction Clearing, of the Stewardship Contract, or as described in SUPPLEMENTAL SPECIFICATIONS.

C. Slash treatment.

Within the roadway, remove limbs, chunks, and debris in excess of 12 inches in length and 3 inches in diameter, and concentrations that may plug ditches or culverts, and water courses.

Dispose of slash by scattering outside the roadway limits without damaging trees, or improvements.

Large accumulations of slash may be ordered hauled under T-832.

Special Project Specification 835-F12-1 (8/99)

T-835 POSTHAUL ROADWAY DRAINAGE MAINTENANCE (7/91)

1. DESCRIPTION

This work consists of providing posthaul drainage for closed roads.

2. MAINTENANCE REQUIREMENTS

a. Drainage - Delete this section and substitute the following:

(1) Upon completion of work, the roadway shall be shaped to provide for removal of surface water, but need not be passable to vehicles.
Waterbars, Type 1. and barriers shall be constructed according to *Typical Sections and Waterbar Placement and Construction Guide for Siuslaw National Forest.*

(2) Continuous blade shaping of the roadbed is not normally required under this specification.

(3) Work to be done at staked locations shall be as indicated on the stake and/or stated in Special Project Specifications.

(4) Drainage structures located in throughfills and natural watercourses shall be fully functional without obstructions, including inlet and outlet channel within twenty (20) feet of the structure.

(5) In addition to spacing guidelines, Type 1 waterbars shall be placed adjacent to culverts and other fabricated structures providing drainage from road ditches. Removed structures shall become Purchaser's property to be removed from National Forest. Purchaser installed temporary drainage structures shall be removed and replaced with a waterbar.

b. Slides, Slumps and Slough

Slides and slough may be left in place provided they do not potentially impound water or divert water from watercourses. Reshaping of the various surfaces shall be done as necessary to provide drainage.

c. Entrance Devices

Delete this section and substitute the following:

Upon completion of work, entrance barricade as shown in *Typical Sections* shall be placed to effectively eliminate access by motorized vehicles having four (4) wheels and a width in excess of forty (40) inches.

d. Seeding

All disturbed areas shall be seeded and fertilized in accordance with requirements set forth in Section T-841.

Special Project Specification 835-F12-2 (7/02)

T-835 POSTHAUL ROADWAY DRAINAGE MAINTENANCE (7/91)

1. DESCRIPTION

This work consists of providing posthaul drainage for closed roads.

2. MAINTENANCE REQUIREMENTS

a. Drainage - Delete this section and substitute the following:

(1) Upon completion of work, the roadway shall be shaped to provide for removal of surface water. Leave roads useable for high clearance vehicles. Purchaser modifications at road junctions shall be removed or reshaped to leave the entrance as it was before use, or as agreed at the time of improvement.
Waterbars, Type II, shall be constructed according to *Typical Sections and Waterbar Placement and Construction Guide for Siuslaw National Forest.*

(2) Continuous blade shaping of the roadbed is not normally required under this specification.

(3) Work to be done at staked locations shall be as indicated on the stake and/or stated in Special Project Specifications.

(4) Drainage structures located in throughfills and natural watercourses shall be fully functional without obstructions, including inlet and outlet channel within twenty (20) feet of the structure.

(5) In addition to spacing guidelines, Type II waterbars shall be placed adjacent to culverts and other fabricated structures providing drainage from road ditches. Removed structures shall become Purchaser's property to be removed from National Forest. Purchaser installed temporary drainage structures shall be removed and replaced with a waterbar.

b. Slides, Slumps and Slough

Slides and slough may be left in place provided they do not potentially impound water or divert water from watercourses. Construct cross drains (or water bars) as needed on the upper and lower end of the slump or slide to divert water from the area. Reshaping of the various surfaces shall be done as necessary to provide drainage.

c. Entrance Devices

Delete this section.

d. Seeding

All disturbed areas shall be seeded and fertilized in accordance with requirements set forth in Section T-841.

ROAD CLOSURE – EARTH MOUND TYPICAL

PROJECT	SHEET	TOTAL SHEETS

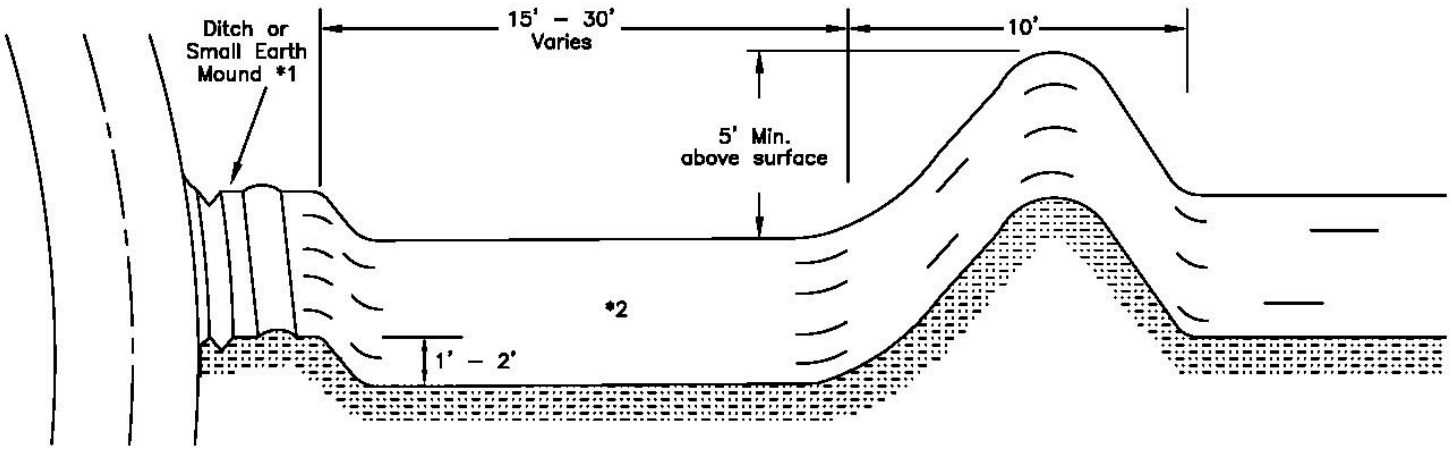

ISOMETRIC VIEW

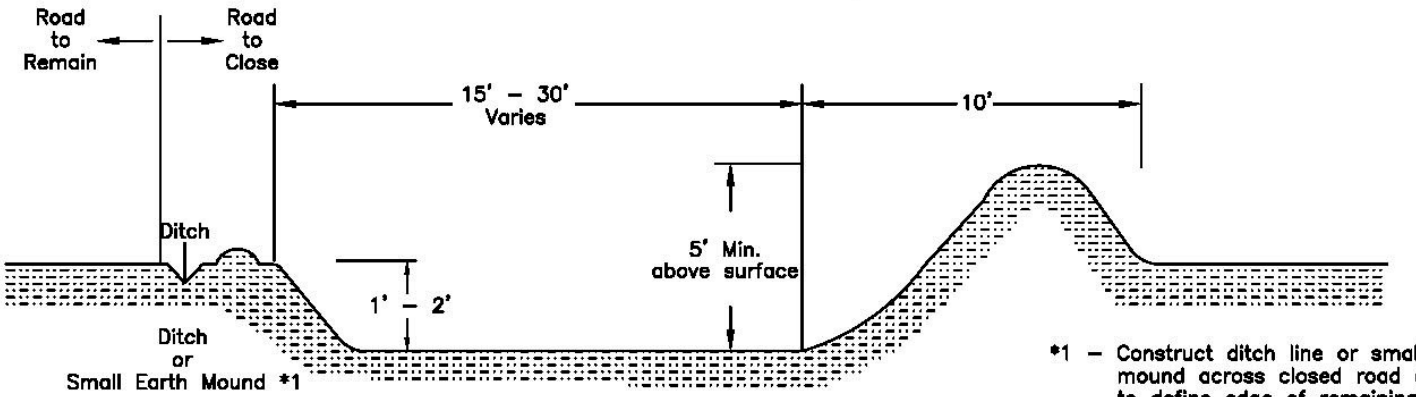

*1 – Construct ditch line or small earth mound across closed road entrance to define edge of remaining road.

*2 – Slope Excavation area to drain

PROFILE VIEW

6–15–05

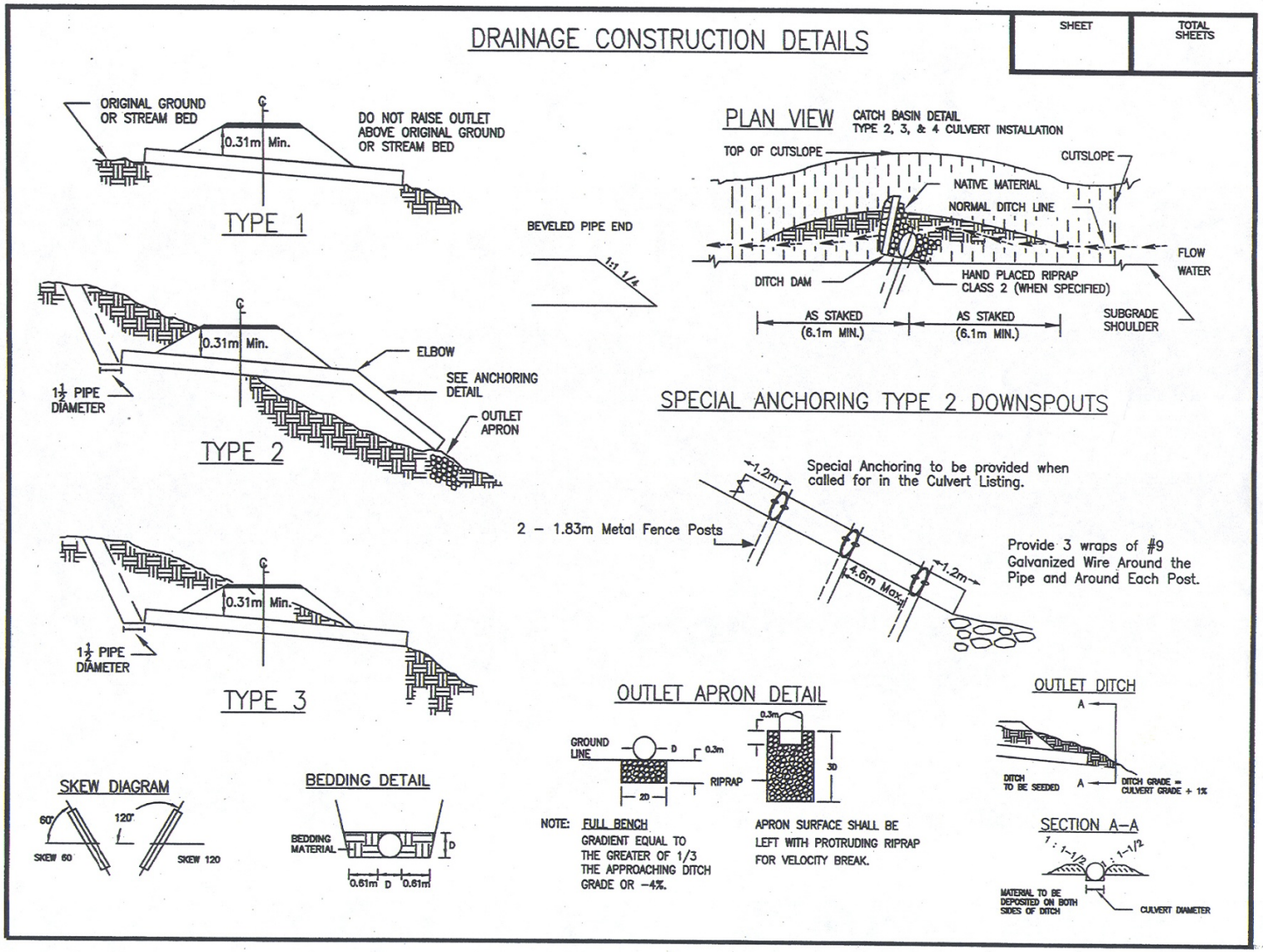
DRAINAGE CONSTRUCTION DETAILS
SHEET
TOTAL SHEETS
ORIGINAL GROUND OR STREAM BED
0.31m Min.
DO NOT RAISE OUTLET ABOVE ORIGINAL GROUND OR STREAM BED
TYPE 1
BEVELED PIPE END
1:1 1/4
PLAN VIEW
CATCH BASIN DETAIL
TYPE 2, 3, & 4 CULVERT INSTALLATION
TOP OF CUTSLOPE
CUTSLOPE
NATIVE MATERIAL
NORMAL DITCH LINE
FLOW
WATER
DITCH DAM
HAND PLACED RIPRAP
CLASS 2 (WHEN SPECIFIED)
AS STAKED
(6.1m MIN.)
AS STAKED
(6.1m MIN.)
SUBGRADE
SHOULDER
0.31m Min.
ELBOW
SEE ANCHORING DETAIL
OUTLET APRON
1½ PIPE DIAMETER
TYPE 2
SPECIAL ANCHORING TYPE 2 DOWNSPOUTS
Special Anchoring to be provided when called for in the Culvert Listing.
1.2m
2 – 1.83m Metal Fence Posts
4.6m Max.
1.2m
Provide 3 wraps of #9 Galvanized Wire Around the Pipe and Around Each Post.
0.31m Min.
1½ PIPE DIAMETER
TYPE 3
OUTLET APRON DETAIL
GROUND LINE
D
0.3m
RIPRAP
2D
0.3m
3D
NOTE: FULL BENCH
GRADIENT EQUAL TO THE GREATER OF 1/3 THE APPROACHING DITCH GRADE OR –4%.
APRON SURFACE SHALL BE LEFT WITH PROTRUDING RIPRAP FOR VELOCITY BREAK.
OUTLET DITCH
A
DITCH TO BE SEEDED
A
DITCH GRADE = CULVERT GRADE + 1%
SKEW DIAGRAM
60°
120°
SKEW 60
SKEW 120
BEDDING DETAIL
BEDDING MATERIAL
D
0.61m D 0.61m
SECTION A–A
1 : 1–1/2
1 : 1–1/2
MATERIAL TO BE DEPOSITED ON BOTH SIDES OF DITCH
CULVERT DIAMETER