# STANDARD SPECIFICAIONS
# FOR CONSTRUCTION OF
# ROADS AND BRIDGES
# ON FEDERAL HIGHWAY PROJECTS
# FP-03
# US CUSTOMARY UNITS

**Project Name:** **THE END TIMBER SALE ROAD RECONSTRUCTION**

**Date:** **04/03/2014**

| | |
|---|---|
| **ID LABEL** | **1** |
| **ROAD NO.** | **2258050**<br>**Reconst.** |
| **Terminus Begin** | **MP 0.00** |
| **Terminus End** | **MP 0.36** |
| **Construction (C) Reconstruction (R)** | **R** |

| | | | **Title** | **Revised Date** | **1** |
|---|---|---|---|---|---|
| | | | **Preface** | 03/15/2004 | X |
| **100 General Requirements** | | | | | |
| | **101 - Terms, Format, and Definitions** | | | | |
| | | | FLH FP-03 Corrections | 07/25/2005 | |
| | | X | Meaning of Terms | 01/22/2009 | X |
| | | X | Meaning of Terms | 01/22/2009 | X |
| | | X | Abbreviations and Symbols | 06/16/2006 | X |

| | | | | | |
|---|---|---|---|---|---|
| | | 04 | Symbols | 03/29/2007 | X |
| | | 04 | Definitions | 11/06/2007 | X |
| **102 - Bid, Award, and Execution of Contract** | | | | | |
| | | 00 | Delete 102 in its entirety | 02/16/2005 | X |
| | **103 - Scope of Work** | | | | |
| | | 00 | Intent of Contract | 02/16/2005 | X |
| | **104 - Control of Work** | | | | |
| | | 00 | Deletions to 104 | 06/16/2006 | X |
| | | 03 | Specifications and Drawings | 02/22/2005 | |
| | | 03 | Specifications and Drawings | 01/22/2009 | X |
| | | 03 | Specifications and Drawings | 02/22/2005 | |
| | | 06 | Use of Roads by Contractor | 02/17/2005 | X |
| | | 07 | Other Contracts | 02/17/2005 | X |
| | **105 - Control of Material** | | | | |
| | | 02 | Material Sources | 02/17/2005 | |
| | | 02 | Material Sources | 02/17/2005 | |
| | | 02 | Material Sources | 01/18/2007 | X |
| | | 02 | Material Sources | 02/17/2005 | X |
| | | 02 | Material Sources | 02/17/2005 | |
| | | 02 | Government-provided sources | 03/29/2005 | |
| | | 02 | Contractor-provided material sources | 03/08/2007 | X |
| | | 05 | Use of Material Found in the Work | 05/12/2004 | X |
| | **106 - Acceptance of Work** | | | | |
| | | 01 | Conformity with contract requirements | 07/31/2007 | |

| | | | | | |
|---|---|---|---|---|---|
| | | 01 | Conformity with contract requirements | 07/31/2007 | X |
| | | 07 | Partial and Final Acceptance | 05/11/2004 | X |
| | **107 - Legal Relations and Responsibility To the Public** | | | | |
| | | 02 | Protection and Restoration of Property and Landscape | 02/17/2005 | |
| | | 05 | Responsibility for Damage Claims | 05/11/2004 | X |
| | | 06 | Contractor Responsibility for Work | 06/16/2006 | X |
| | | 08 | Sanitation, Health, and Safety | 05/11/2004 | |
| | | 08 | Sanitation, Health & Safety | 03/29/2005 | X |
| | | 09 | Legal Relationship of the Parties | 06/16/2006 | X |
| | | 10 | Environmental Protection | 06/16/2006 | X |
| | | 11 | Protection of Forests, Parks, and Public Lands | 02/17/2005 | |
| | **108 - Prosecution and Progress** | | | | |
| | | 00 | Delete Section 108 in entirety | 02/16/2005 | X |
| | **109 - Measurement and Payment** | | | | |
| | | 00 | Deletions | 02/17/2005 | X |
| | | 02 | Measurement Terms and Definitions | 06/16/2006 | X |
| | | 03 | Weighing Procedures and Devices | 02/17/2005 | |
| | | 03 | Weighing Procedures and Devices | 03/29/2005 | |
| **150 Project Requirements** | | | | | |
| | **151 – Mobilization** | | | | |
| | | 03 | Payment | 08/05/2005 | |
| | **152 - Construction Survey and Staking** | | | | |
| | | 00 | Construction Survey and Staking | 08/05/2005 | |
| | **153 - Contractor Quality Control** | | | | |

| | | | | | |
|---|---|---|---|---|---|
| | | 02 | Contractor Quality Control Plan | 02/17/2005 | X |
| | | 04 | Records | 10/24/2007 | X |
| | **154 - Contractor Sampling and Testing** | | | | |
| | | 01 | Description | 05/24/2005 | |
| | **155 - Schedules for Construction Contracts** | | | | |
| | | 00 | Contractor Quality Control Plan, Records | 05/11/2004 | X |
| | **156 - Public Traffic** | | | | |
| | | 00 | Complete specification | 04/17/2007 | X |
| | | 03 | Accommodating Traffic During Work | 02/24/2005 | |
| | | 04 | Maintaining Roadways During Work | 02/24/2005 | |
| | | 08 | Traffic and Safety Supervisor | 02/24/2005 | |
| | **157 - Soil Erosion Control** | | | | |
| | | 03 | General | 02/24/2005 | X |
| | **170 - Develop Water Supply and Watering** | | | | |
| | | 00 | Complete Specification | 03/30/2005 | |
| | **171 - Weed and Disease Prevention** | | | | |
| | | 00 | Complete Specification | 03/30/2005 | X |
| | **183 - P Line Survey** | | | | |
| | | 00 | Complete Specification | 03/30/2005 | |
| | **185 - Low Volume Road Design** | | | | |
| | | 00 | Complete Specification | 02/24/2005 | |
| **200 Earthwork** | | | | | |
| | **201 - Clearing and Grubbing** | | | | |
| | | 00 | Deletions | 08/05/2009 | X |

| | | | | | |
|---|---|---|---|---|---|
| | | 01 | Description | 02/18/2005 | X |
| | | 04 | Clearing | 02/18/2005 | |
| | | 04 | Clearing | 02/22/2005 | X |
| | | 04 | Clearing | 03/03/2005 | X |
| | | 06 | Disposal | 02/18/2005 | X |
| | | 06 | Disposal | 02/23/2005 | |
| | | 06 | Disposal | 02/23/2005 | |
| | | 06 | Disposal | 11/04/2004 | X |
| | | 06 | Disposal | 05/12/2004 | |
| | | 06 | Disposal | 11/09/2005 | X |
| | **203 - Removal of Structures and Obstructions** | | | | |
| | | 01 | Description | 02/25/2005 | X |
| | | 02 | Material | 02/18/2005 | |
| | | 04 | Removing Material | 02/18/2005 | X |
| | | 05 | Disposing of Material | 02/24/2005 | |
| | | 05 | Disposing of Material | 02/18/2005 | |
| | | 05 | Disposing of Material | 02/18/2005 | X |
| | | 08 | Payment | 02/24/2005 | |
| | **204 - Excavation and Embankment** | | | | |
| | | 00 | Complete Specification | 03/26/2009 | X |
| | | 05 | Conservation of Topsoil | 02/18/2005 | |
| | | 06 | Roadway Excavation | 03/02/2005 | |
| | | 06 | Roadway Excavation | 03/02/2005 | |
| | | 06 | Roadway Excavation | 03/02/2005 | |

| | | | | | |
|---|---|---|---|---|---|
| | | 09 | Preparing Foundation for Embankment Construction | 03/02/2005 | |
| | | 10 | Embankment Construction | 03/02/2005 | |
| | | 11 | Compaction | 04/11/2005 | |
| | | 13 | Sloping, Shaping, and Finishing | 03/02/2005 | |
| | | 13 | Sloping, Shaping, and Finishing | 03/02/2005 | |
| | | 14 | Disposal of Unsuitable or Excess Material | 03/02/2005 | |
| | | 15 | Acceptance | 02/07/2007 | |
| | **205 - Rock Blasting** | | | | |
| | | 02 | Regulations | 05/13/2004 | |
| | | 06 | Preblast condition survey and vibration monitoring and control | 05/12/2004 | |
| | | 07 | Test Blasting | 05/12/2004 | |
| | | 08 | Controls | 05/12/2004 | |
| | **209 - Structure Excavation and Backfill** | | | | |
| | | 00 | Complete Spec. 209A; Exc & Backfill for selected Minor Structures. NOT a Replacement for 209. | 03/24/2008 | |
| | | 10 | Backfill | 10/23/2007 | |
| | | 11 | Compacting | 02/24/2005 | |
| | **211 – Roadway Obliteration** | | | | |
| | | 01 | Description | 03/30/2005 | |
| | | 01 | Description | 03/30/2005 | |
| | | 02 | Construction Requirements | 02/25/2005 | |
| | **212 – Linear Grading** | | | | |
| | | 00 | Complete Specification (composite road construction) | 05/19/2005 | |

| | | | | | |
|---|---|---|---|---|---|
| | **213 – Subgrade Stabilization** | | | | |
| | | 02 | FLH FP-03 Correction metric | 09/06/2005 | |
| **250 Structural Embankments** | | | | | |
| | **251 – Riprap** | | | | |
| | | 03 | General | 06/18/2007 | |
| | **252 – Special Rock Embankment and Rock Buttress** | | | | |
| | | 02 | Material – Placing Rock | 05/13/2004 | |
| | **255 – Mechanically Stabilized Earth Walls** | | | | |
| | | 02 | Material – Acceptance | 02/25/2005 | |
| | **262 – Reinforced Soil Embankment** | | | | |
| | | 00 | Complete Specification | 05/14/2004 | |
| | | 01 | Table 262-1 Sampling & Testing Requirements | 05/14/2004 | |
| **300 Aggregate Courses** | | | | | |
| | **301 – Untreated Aggregate Courses** | | | | |
| | | 00 | Title Change | 03/03/2005 | |
| | | 01 | Work | 03/03/2005 | |
| | | 02 | Material | 05/16/2005 | |
| | | 03 | General | 09/14/2005 | |
| | | 04 | Mixing and Spreading | 03/03/2005 | |
| | | 05 | Compacting | 05/17/2005 | |
| | | 06 | Surface Tolerance | 03/03/2005 | |
| | | 08 | Acceptance | 03/03/2005 | |
| | | 08 | Acceptance | 03/03/2005 | |
| | | 08 | Acceptance | 03/30/2005 | |

| | | | | | |
|---|---|---|---|---|---|
| | | 09 | Measurement | 07/07/2005 | |
| | | 10 | Payment | 03/03/2005 | |
| | **302 - Treated Aggregate Courses** | | | | |
| | | 00 | Deletes 302 in its entirety | 02/16/2005 | |
| | | 03 | FLH FP-03 Corrections metric | 08/12/2004 | |
| | **303 - Road Reconditioning** | | | | |
| | | 01 | Description | 03/02/2005 | |
| | | 06 | Aggregate Surface Reconditioning | 05/17/2005 | |
| | | 07 | Roadway Reconditioning | 03/02/2005 | |
| | | 11 | Measurement | 03/29/2005 | |
| | **306 - Dust Palliative** | | | | |
| | | 03 | General | 03/02/2005 | |
| | | 04 | Preparation and Application | 03/02/2005 | |
| | | 06 | Acceptance | 03/02/2005 | |
| | | 10 | Table 306-1 Sampling & Testing | 03/02/2005 | |
| | **320 - Stockpiled Aggregates** | | | | |
| | | 00 | Complete Specification | 03/02/2005 | |
| | **321 - Major Aggregate Courses** | | | | |
| | | 00 | Complete Specification | 12/19/2005 | |
| | **322 - Minor Aggregate Courses** | | | | |
| | | 00 | Complete Specification | 10/14/2011 | X |
| **400 Asphalt Pavements and Surface Treatments** | | | | | |
| | **401 - Superpave Hot Asphalt Concrete Pavement** | | | | |
| | | 01 | FLH FP-03 Correction metric uscu | 08/12/2004 | |

| | | | | | |
|---|---|---|---|---|---|
| | | 04 | FLH FP-03 Correction uscu | 08/12/2004 | |
| | **402 - Hot Asphalt Concrete Pavement by Hveem or Marshall Mix Design Method** | | | | |
| | | 03 | FLH FP-03 Correction metric uscu | 08/12/2004 | |
| | **403 - Hot Asphalt Concrete Pavement** | | | | |
| | | 06 | Surface Preparation | 05/17/2005 | |
| | | 16 | Pavement Smoothness & Testing | 03/02/2005 | |
| | | 17 | Acceptance | 03/02/2005 | |
| | | 17 | Acceptance | 03/02/2005 | |
| | **404 - Minor Hot Asphalt Concrete** | | | | |
| | | 02 | Composition of Mix (Job-Mix Formula) | 03/02/2005 | |
| | | 04 | Weather Limitations | 03/02/2005 | |
| | | 06 | Placing | 03/02/2005 | |
| | | 07 | Compacting (a) | 03/02/2005 | |
| | | 07 | Compacting (b) | 03/02/2005 | |
| | | 09 | Acceptance | 03/02/2005 | |
| | **409 - Asphalt Surface Treatment** | | | | |
| | | 02 | Material | 05/12/2004 | |
| | | 06 | Weather, date, time | 05/12/2004 | |
| | | 08 | Application | 06/21/2005 | |
| | | 10 | FLH FP-03 Corrections uscu | 08/12/2004 | |
| | | 11 | table409-2 | 12/18/2004 | |
| | | 12 | FLH FP-03 Correction uscu | 08/12/2004 | |
| | | 13 | Acceptance & Testing | 05/13/2004 | |

| | | | | | |
|---|---|---|---|---|---|
| | **411 - Asphalt Prime Coat** | | | | |
| | | 06 | Application | 05/12/2004 | |
| | **414 - Asphalt Pavement Crack and Joint Sealing** | | | | |
| | | 02 | Material | 05/12/2004 | |
| | | 05 | Cleaning & Sealing | 05/12/2004 | |
| | **430 - Asphalt Pavement Patching** | | | | |
| | | 00 | Complete Specification | 05/12/2004 | |
| **550 Bridge Construction** | | | | | |
| | **552 - Structural Concrete** | | | | |
| | | 13 | FLH FP-03 Correction metric uscs | 08/12/2004 | |
| | **571 - Prefabricated Bridges** | | | | |
| | | 00 | Complete Specification | 03/15/2005 | |
| | **572 - Log Stringer Bridges** | | | | |
| | | 00 | Complete Specification | 05/12/2004 | |
| | **573 - Bridge Repair** | | | | |
| | | 00 | Complete Specification | 05/12/2004 | |
| **600 Incidental Construction** | | | | | |
| | **601 - Minor Concrete** | | | | |
| | | 00 | Replace Specification | 05/14/2004 | |
| | | 02 | Table 601-2 Sampling & Testing | 03/02/2005 | |
| | **602 - Culverts and Drains** | | | | |
| | | 03 | General | 09/06/2005 | |
| | | 06 | Laying Plastic Pipe | 08/05/2009 | |
| | **603 - Structural Plate Structures** | | | | |

| | | | | | |
|---|---|---|---|---|---|
| | | 03 | General | 03/02/2005 | |
| | | 04 | Erecting | 03/02/2005 | |
| | **607 - Cleaning, Reconditioning, and Repairing Existing Drainage** | | | | |
| | | 04 | Cleaning Culverts in Place | 03/02/2005 | |
| | **625 - Turf Establishment** | | | | |
| | | 03 | General | 02/25/2005 | |
| | | 03 | General | 07/02/2007 | X |
| | | 04 | Preparing Seedbed | 02/25/2005 | |
| | | 05 | Watering | 03/30/2005 | |
| | | 05 | Watering | 03/02/2005 | |
| | | 07 | Seeding | 02/25/2005 | |
| | **633 - Permanent Traffic Control** | | | | |
| | | 02 | Material | 03/03/2005 | |
| | | 03 | General | 03/03/2005 | |
| | | 05 | Panels | 03/03/2005 | |
| | **634 - Permanent Pavement Marking** | | | | |
| | | 03 | General | 03/03/2005 | |
| | **635 - Temporary Traffic Control** | | | | |
| | | 03 | General | 05/13/2004 | X |
| | **648 - Stream Simulation** | | | | |
| | | 00 | Complete Specification | 03/15/2005 | |
| | **650 - Road Closure Devices** | | | | |
| | | 00 | Complete Specification | 06/28/2007 | |
| | **651 - Development of Pits & Quarries** | | | | X |

| | | | | | |
|---|---|---|---|---|---|
| | | 00 | Complete Specification | 03/02/2005 | X |
| **700 Material** | | | | | |
| | **703 – Aggregate** | | | | |
| | | 05 | Subbase, Base, & Surface Course Aggregate | 08/14/2009 | X |
| | | 06 | Flakiness Index and Adherent Coatings | 03/02/2005 | |
| | | 07 | FLH FP-03 Correction metric uscu | 03/02/2005 | |
| | | 10 | FLH FP-03 Correction | 03/02/2005 | |
| | **704 - Soil** | | | | |
| | | 02 | FLH FP-03 Correction Bedding Material | 03/02/2005 | |
| | | 02 | FLH FP-03 Modification - Bedding Material metric uscu | 03/02/2005 | |
| | **705 – Rock** | | | | |
| | | 02 | Riprap Rock | 08/05/2009 | |
| | **712 - Joint Material** | | | | |
| | | 01 | Sealants, Fillers, Seals, and Sleeves | 03/02/2005 | |
| | **713 - Roadside Improvement Material** | | | | |
| | | 05 | Mulch | 03/02/2005 | X |
| | **714 - Geotextile and Geocomposite Drain Material** | | | | |
| | | 03 | Geogrids | 02/25/2005 | |
| | **718 - Traffic Signing and Marking Material** | | | | |
| | | 02 | Protective Overlay Film and Edge Film | 03/02/2005 | |
| | | 05 | Aluminum Panels | 02/25/2008 | X |
| | | 08 | FLH FP-03 Correction metric | 03/27/2007 | |
| | | 14 | FLH FP-03 Correction metric uscu | 03/02/2005 | |
| | | 15 | FLH FP-03 Corrections metric | 03/27/2007 | |

| | | | | | |
|---|---|---|---|---|---|
| | | 15 | FLH FP-03 Correction metric | 03/27/2007 | |
| | **725 - Miscellaneous Material** | | | | |
| | | 02 | Calcium Chloride, Calcium Chloride Flakes and Magnesium Chloride | 03/02/2005 | |

# Table of Contents


Table of Contents ..... 14

Preface ..... 17

101 - Terms, Format, and Definitions ..... 18

101.01 Meaning of Terms ..... 18

101.01 Meaning of Terms ..... 18

101.03 Abbreviations. ..... 18

101.04 Definitions ..... 18

101.04 Definitions. ..... 22

102 - Bid, Award, and Execution of Contract ..... 23

102 Bid, Award, and Execution of Contract ..... 23

103 - Scope of Work ..... 24

Deletions ..... 24

104 - Control of Work ..... 25

Deletions ..... 25

104.03 ..... 25

104.06 Use of Roads by Contractor ..... 25

104.07 Other Contracts. ..... 25

105 - Control of Material ..... 26

105.02 Material Sources. ..... 26

105.02(a) Government-provided sources. ..... 26

105.02(a) Government Provided Sources. ..... 26

105.02 Material Sources. ..... 26

105.02(a) Contractor-provided sources. ..... 26

105.05 Use of Material Found in the Work. ..... 26

106 - Acceptance of Work ..... 28

106.01 Conformity with Contract Requirements. ..... 28

106.07 Delete ..... 30

107 - Legal Relations and Responsibility to the Public ..... 31

107.05 Responsibility for Damage Claims. ..... 31

107.06 Contractor's Responsibility for Work. ..... 31
107.08 Sanitation, Health, and Safety ..... 31
107.09 Legal Relationship of the Parties. ..... 31
107.10 Environmental Protection. ..... 31
108 - Prosecution and Progress ..... 33
108 Delete. ..... 33
109 - Measurement and Payment ..... 34
109 Deletions ..... 34
109.02 Measurement Terms and Definitions. ..... 34
153 - Contractor Quality Control ..... 35
153.02 Contractor Quality Control Plan. ..... 35
153.04 Records. ..... 35
155 - Schedules for Construction Contracts ..... 36
155 Delete. ..... 36
156 - Public Traffic ..... 37
157 - Soil Erosion Control ..... 40
157.03 General ..... 40
171 - Weed and Disease Prevention ..... 41
201 - Clearing and Grubbing ..... 43
201.02 Material: ..... 43
201.01 Description ..... 43
201.04 Clearing. (c) ..... 43
201.04 Clearing. ..... 44
201.06 Disposal. ..... 44
201.06 Disposal ..... 45
203 - Removal of Structures and Obstructions ..... 46
203.01 Description. ..... 46
203.04 Removing Material. ..... 46
203.05 Disposing of Material. ..... 46
204 - Excavation and Embankment ..... 48
322 - Minor Aggregate Courses ..... 60

625 - Turf Establishment ..... 67
625.03 General. ..... 67
625.04 Preparing Seedbed. ..... 67
625.05 Watering ..... 67
625.06 Fertilizing. ..... 67
625.07 Seeding. ..... 68
625.08 Mulching. ..... 69
625.09 Protecting and Caring for Seeded Areas ..... 69
625.11 Measurement. ..... 69
635 - Temporary Traffic Control ..... 70
635.03 General. ..... 70
651 – Development of Pits and Quarries ..... 71
703 – Aggregate ..... 72
713 - Roadside Improvement Material ..... 77
713.05 Mulch. ..... 77
718 - Traffic Signing and Marking Material ..... 78
718.05 Aluminum Panels ..... 78

# Preface

Preface_wo_03_15_2004_m

Delete all but the first paragraph and add the following:

The Forest Service, US Department of Agriculture has adopted FP-03 for construction of National Forest System Roads.

# 101 - Terms, Format, and Definitions

101.00_nat_us_07_25_2005

101.01_nat_us_01_22_2009

## 101.01 Meaning of Terms

Delete all references to the TAR (Transportation Acquisition Regulations) in the specifications.

101.01_nat_us_01_22_2009

## 101.01 Meaning of Terms

Delete all references to the FAR (Federal Acquisition Regulations) in the specifications.

101.03_nat_us_06_16_2006

## 101.03 Abbreviations.

Add the following to (a) Acronyms:

| | |
|---|---|
| AFPA | American Forest and Paper Association |
| MSHA | Mine Safety and Health Administration |
| NIST | National Institute of Standards and Technology |
| NESC | National Electrical Safety Code |
| WCLIB | West Coast Lumber Inspection Bureau |

.

Add the following to (b) SI symbols:

| | |
|---|---|
| mp | Milepost |
| ppm | Part Per Million |

101.04_nat_us_03_29_2007

## 101.04 Definitions.

Delete the following definitions and substitute the following:

**Bid Schedule**--The Schedule of Items.

**Bridge**--No definition.

**Contractor**--The individual or legal entity contracting with the Government for performance of prescribed work. In a timber sale contract, the contractor is the "purchaser".

**Culvert**--No definition.

**Right-of-Way**--A general term denoting (1) the privilege to pass over land in some particular line (including easement, lease, permit, or license to occupy, use, or traverse public or private lands), or (2) Real property necessary for the project, including roadway, buffer areas, access, and drainage areas.

Add the following:

**Adjustment in Contract Price**--"Equitable adjustment," as used in the Federal Acquisition Regulations, or "construction cost adjustment," as used in the Timber Sale Contract, as applicable.

**Change**--"Change" means "change order" as used in the Federal Acquisition Regulations, or "design change" as used in the Timber Sale Contract.

**Design Quantity**--"Design quantity" is a Forest Service method of measurement from the FS-96 *Forest Service Specifications for the Construction of Roads and Bridges*. Under these FP specifications this term is replaced by the term "Contract Quantities".

**Forest Service**--The United States of America, acting through the Forest Service, U.S. Department of Agriculture.

**Neat Line**--A line defining the proposed or specified limits of an excavation or structure.

**Pioneer Road**--Temporary construction access built along the route of the project.

**Purchaser**--The individual, partnership, joint venture, or corporation contracting with the Government under the terms of a Timber Sale Contract and acting independently or through agents, employees, or subcontractors.

**Protected Streamcourse**--A drainage shown on the plans or timber sale area map that requires designated mitigation measures.

**Road Order**--An order affecting and controlling traffic on roads under Forest Service jurisdiction. Road Orders are issued by a designated Forest Officer under the authorities of 36 CFR, part 260.

**Schedule of Items**--A schedule in the contract that contains a listing and description of construction items, quantities, units of measure, unit price, and amount.

**Utilization Standards**--The minimum size and percent soundness of trees described in the specifications to determine merchantable timber.

Add Figure 101-1—Illustration of road structure terms:

Figure 101-1—Illustration of road structure terms.

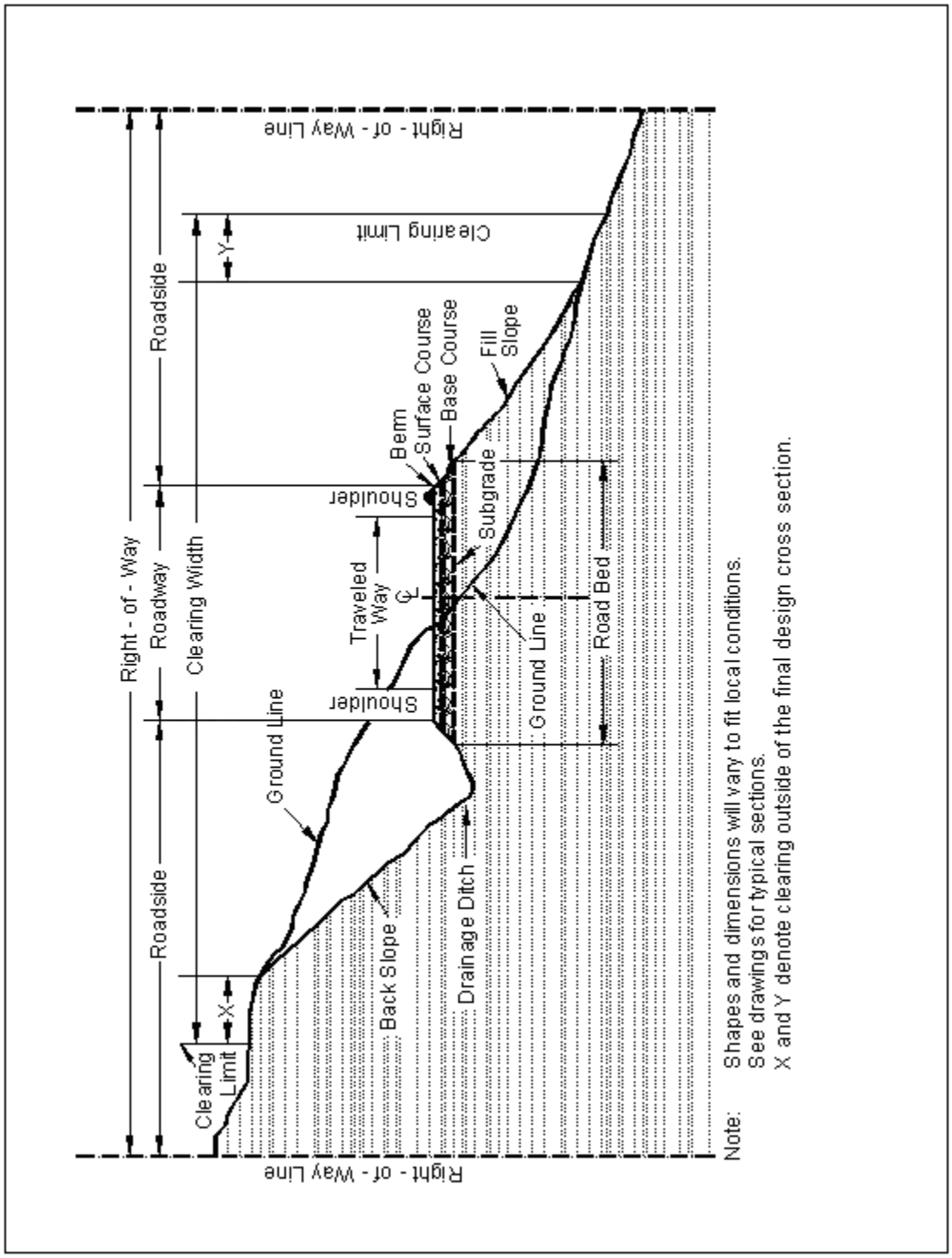

**101.04 Definitions.**

Delete the following definitions:

Contract Modification

Day

Notice to Proceed

Solicitation

# 102 - Bid, Award, and Execution of Contract

102.00_nat_us_02_16_2005

## 102 Bid, Award, and Execution of Contract

Delete Section 102 in its entirety.

# 103 - Scope of Work

103.00_nat_us_02_16_2005

## Deletions

Delete all but subsection 103.01 Intent of Contract.

# 104 - Control of Work

104.00_nat_us_06_16_2006

## Deletions

Delete Sections 104.01, 104.02, and 104.04.

104.03_nat_us_01_22_2009

## 104.03 Specifications and Drawings.

Delete 104.03.

104.06_nat_us_02_17_2005

Add the following subsection:

## 104.06 Use of Roads by Contractor

The Contractor is authorized to use roads under the jurisdiction of the Forest Service for all activities necessary to complete this contract, subject to the limitations and authorizations designated in the Road Order(s) or described in the contract, when such use will not damage the roads or national forest resources, and when traffic can be accommodated safely.

104.07_nat_us_02_17_2005

Add Subsection.

## 104.07 Other Contracts.

**Forest Service** is administering and is intending to award other contracts within the area of this project or within the Haul Route area. Schedule activities to assure no delays or interference to the operations of the U.S. Forest Service contracts.

# 105 - Control of Material

105.02_nat_us_01_18_2007

## 105.02 Material Sources.

### 105.02(a) Government-provided sources.

Add the following:

Comply with the requirements of 30 CFR 56, subparts B and H. Use all suitable material for aggregate regardless of size unless otherwise designated. When required, re-establish vegetation in disturbed areas according to section 625.

105.02_nat_us_02_17_2005

### 105.02(a) Government Provided Sources.

There is no charge for material taken from **FS Pit ( FSR - 2258050)**.

105.02_nat_us_03_08_2007

## 105.02 Material Sources.

### 105.02(a) Contractor-provided sources.

Add the following:

All material (e.g., soil, gravel, sand, borrow, aggregate, etc.) transported onto National Forest System land or incorporated into the work will be weed-free. The Contracting Officer may request written documentation of methods used to determine the weed-free status of any and all materials furnished by the contractor. Contractor-provided expertise and methods to establish weed-free status must be appropriate for the weeds of concern in the local area. The following applies to this contract:

A Forest Service weed specialist will inspect proposed sources to determine weed-free status. Provide the Contracting Officer written notification of proposed material sources __14__ days prior to use. Written approval of the specific source will be provided to the contractor. If weed species are present in the proposed source, appropriate mitigation measures may allow conditional use of the source as required by the Contracting Officer.

105.05_nat_us_05_12_2004

## 105.05 Use of Material Found in the Work.

Delete 105.05 (a) and (b) and the last sentence of the second paragraph and substitute the following:

Materials produced or processed from Government lands in excess of the quantities required for performance of this contract are the property of the Government. The Government is not obligated to make reimbursement for the cost of producing these materials.

# 106 - Acceptance of Work

106.01_nat_us_07_31_2007

## 106.01 Conformity with Contract Requirements.

Delete Subsection 106.01 and substitute the following:

References to standard test methods of AASHTO, ASTM, GSA, and other recognized standard authorities refer to the methods in effect on the date of solicitation for bids.

Perform all work to the lines, grades, cross-sections, dimensions, and processes or material requirements shown on the plans or specified in the contract.

Incorporate manufactured materials into the work according to the manufacturer's recommendations or to these specifications, whichever is more strict.

Plan dimensions and contract specification values are the values to be strived for and complied with as the design values from which any deviations are allowed. Perform work and provide material that is uniform in character and reasonably close to the prescribed value or within the specified tolerance range. The purpose of a tolerance range is to accommodate occasional minor variations from the median zone that are unavoidable for practical reasons.

When standard manufactured items are specified (such as fence, wire, plates, rolled shapes, pipe conduits, etc., that are identified by gauge, unit mass, section dimensions, etc.), the identification will be considered to be nominal masses or dimensions. Unless specific contract tolerances are noted, established manufacturing tolerances will be accepted.

The Government may inspect, sample, or test all work at any time before final acceptance of the project. When the Government tests work, copies of test reports are furnished to the Contractor upon request. Government tests may or may not be performed at the work site. If Contractor testing and inspection is verified by the Government, the Contractor's results may be used by the Government to evaluate work for acceptance. Do not rely on the availability of Government test results for process control.

Acceptable work conforming to the contract will be paid for at the contract unit bid price. Four methods of determining conformity and accepting work are described in Subsections 106.02 to 106.05 inclusive. The primary method of acceptance is specified in each Section of work. However, work may be rejected at any time it is found by any of the methods not to comply with the contract.

Remove and replace work that does not conform to the contract, or to prevailing industry standards where no specific contract requirements are noted, at no cost to the Government.

(a) Disputing Government test results. **If the accuracy of Government test results is disputed, promptly inform the CO. If the dispute is unresolved after reasonable steps are taken to resolve the dispute, further evaluation may be obtained by written request. Include a narrative describing the dispute and a proposed resolution protocol that addresses the following:**

**(1)** Sampling method;

**(2)** Number of samples;
**(3)** Sample transport;
**(4)** Test procedures;
**(5)** Testing laboratories;
**(6)** Reporting;
**(7)** Estimated time and costs; and
**(8)** Validation process.

If the evaluation requires additional sampling or testing be performed, mutually agree with the Government on witnessing procedures and on sampling and testing by a third party laboratory. Use a third party laboratory accredited by the AASHTO accreditation program. Provide proof of the laboratory's accreditation for the test procedures to be used. Do not use the same laboratory that produced the disputed Government test results or that produced the test results used as a basis for the dispute.

The CO will review the proposed resolution protocol and may modify it before final approval and execution.

The Government will use the approved resolution protocol test results to determine the validity of the disputed testing. If the Government test results are validated, the Contractor will be responsible for all costs associated with developing and performing the resolution protocol. If the Government test results are not validated, the Government will be responsible for all costs associated with developing and performing the resolution protocol. If the validity of the Government test results cannot be determined, the Contractor and Government will equally share all costs associated with developing and carrying out the resolution protocol.

**(b) Alternatives to removing and replacing non-conforming work.** As an alternative to removal and replacement, the Contractor may submit a written request to:

**(1)** Have the work accepted at a reduced price; or

**(2)** Be given permission to perform corrective measures to bring the work into conformity.

The request must contain supporting rationale and documentation. Include references or data justifying the proposal based on an evaluation of test results, effect on service life, value of material or work, quality, aesthetics, and other tangible engineering basis. The CO will determine disposition of the nonconforming work.

106.07_nat_us_05_11_2004

## 106.07 Delete

Delete subsection 106.07.

# 107 - Legal Relations and Responsibility to the Public

107.05_nat_us_05_11_2004

## 107.05 Responsibility for Damage Claims.

Delete the entire subsection.

107.06_nat_us_06_16_2006

## 107.06 Contractor's Responsibility for Work.

Delete the following from the first paragraph.

"except as provided in Subsection 106.07".

107.08_nat_us_03_29_2005

## *107.08 Sanitation, Health, and Safety*

Delete the entire subsection.

107.09_nat_us_06_16_2006

## 107.09 Legal Relationship of the Parties.

Delete the entire subsection.

107.10_nat_us_06_16_2006

## 107.10 Environmental Protection.

Add the following:

Design and locate equipment repair shops, stationary refueling sites, or other facilities to minimize the potential and impacts of hazardous material spills on Government land.

Before beginning any work, submit a Hazardous Spill Plan. List actions to be taken in the event of a spill. Incorporate preventive measures to be taken, such as the location of mobile refueling facilities, storage and handling of hazardous materials, and similar information. Immediately notify the CO of all hazardous material spills. Provide a written narrative report form no later than 24 hours after the initial report and include the following:

- Description of the item spilled (including identity, quantity, manifest number, and other identifying information).
- Whether amount spilled is EPA or state reportable, and if so whether it was reported, and to whom.

- Exact time and location of spill including a description of the area involved.
- Containment procedures.
- Summary of any communications the Contractor had with news media, Federal, state and local regulatory agencies and officials, or Forest Service officials.
- Description of clean-up procedures employed or to be employed at the site including final disposition and disposal location of spill residue.

When available provide copies of all spill related clean up and closure documentation and correspondence from regulatory agencies.

The Contractor is solely responsible for all spills or leaks that occur during the performance of this contract. Clean up spills or leaks to the satisfaction of the CO and in a manner that complies with Federal, state, and local laws and regulations.

# 108 - Prosecution and Progress

108.00_nat_us_02_16_2005

## 108 Delete.

Delete Section 108 in its entirety.

# 109 - Measurement and Payment

109.00_nat_us_02_17_2005

## 109 Deletions

Delete the following entire subsections:

**109.06 Pricing of Adjustments.**

**109.07 Eliminated Work.**

**109.08 Progress Payments.**

**109.09 Final Payment.**

109.02_nat_us_06_16_2006

## 109.02 Measurement Terms and Definitions.

**(b) Contract quantity**.

Add the following:

Contract quantities will be adjusted only when there are errors in the original design of 15% or more.

Change the following:

"(b) Cubic yard" to "(c) Cubic yard".

Add the following definition:

**(p) Thousand Board Feet (Mbf).** 1,000 board feet based on nominal widths, thickness, and extreme usable length of each piece of lumber or timber actually incorporated in the job. For glued laminated timber, 1,000 board feet based on actual width, thickness, and length of each piece actually incorporated in the job.

# 153 - Contractor Quality Control

153.02_nat_us_02_17_2005

## 153.02 Contractor Quality Control Plan.

Add the following:

Submit written proposals for approval of alternate AASHTO or State approved test methods. Alternate methods may be allowed based on documented equivalence to the specified method.

153.04_nat_us_10_24_2007

## 153.04 Records.

Delete all but the first sentence

# 155 - Schedules for Construction Contracts

155.00_nat_us_05_11_2004

## 155 Delete.

Delete Section 155 in its entirety.

# 156 - Public Traffic

156.00_nat_us_04_17_2007

Delete Section 156 in its entirety and replace with the following:

## Description

**156.01** This work consists of controlling and protecting public traffic adjacent to and within the project.

## Material

**156.02** Conform to the MUTCD and the following Sections and Subsections:

| | |
|---|---|
| Construction sign panels | 633 |
| Retro-reflective sheeting | 718.01 |
| Temporary concrete barrier | 618 |
| Temporary plastic fence | 710.11 |
| Temporary traffic control devices | 718.22 |

**156.03 General.** Unless otherwise provided for in Table 156-1, keep existing roads open to all traffic during road improvement work, and maintain them in a condition that will adequately accommodate traffic. Delays may not exceed _N/A__ minutes at any one time followed by an open period of no less than _N/A__ minutes.

Perform no work that interferes or conflicts with traffic or existing access to the roadway surface until a traffic control plan has been approved. Post construction signs and traffic control devices in conformance with MUTCD. All required signs will be in place and approved prior to beginning work on project.

If the Contractor agrees in writing to allow public traffic to use a new road being constructed prior to completion, it will be considered an existing road for traffic control purposes.

**156.04 Temporary Traffic Control.** Install and maintain temporary traffic control devices adjacent to and within the project as required by the approved traffic control plan and the MUTCD. Install and maintain traffic control devices as follows:

**(a)** Furnish and install traffic control devices before the start of construction operations.
**(b)** All detours outside of clearing limits will be approved in writing by the Contracting Officer as part of the traffic control plan.
**(c)** Install only those traffic control devices needed for each stage or phase.
**(d)** Relocate temporary traffic control devices as necessary.
**(e)** Remove devices that no longer apply to the existing conditions.
**(f)** Immediately replace any device that is lost, stolen, destroyed, or inoperative.
**(g)** Keep temporary traffic control devices clean.
**(h)** Remove all temporary traffic control devices upon contract completion or when approved.
**(i)** When required, use flaggers certified by the American Traffic Safety Services Association, the National Safety Council, the International Municipal Signal Association, a state agency, or other acceptable organization. Perform the work described under MUTCD Part 6. Use type III, VII, VIII, or IX retroreflective sheeting on flagger paddles. Do not use flags. Flaggers must wear high visibility safety apparel as required by MUTCD 6E.02.

**156.05 Temporary Closures.** Road segments may be closed as shown in Table 156-1. The maximum consecutive days of closure shall be followed by a minimum number of consecutive days open to traffic as shown. Maintain traffic control devices during closure period(s). Appropriate barricades and signs will be erected and maintained as shown in the traffic control plan or as otherwise designated.

Prior to closing roads during construction, give written notice to the Contracting Officer at least 10 days in advance.

**Table 156-1**

**Temporary Road Closures**

| Road Number | From Terminus | To Terminus | Maximum Consecutive Days of Closure | Minimum Consecutive Days Open |
|---|---|---|---|---|
| 2258050 | 0.00 | 0.36 | Close to the Public for the length of the sale. | Close to the Public for the length of the sale. |

**156.06 Acceptance.** Public traffic work will be evaluated under Subsection 106.02.

## Measurement and Payment

**156.07** Do not measure Public Traffic for payment. Compensation is made as an indirect payment.

# 157 - Soil Erosion Control

157.03_nat_us_02_24_2005

## 157.03 General

Delete the entire subsection and replace with the following:

Prior to the start of construction, submit a written plan that provides permanent and temporary erosion control measures to minimize erosion and sedimentation during and after construction. Do not begin work until the necessary controls for that particular phase of work have been implemented. Do not modify the type, size, or location of any control. An alternate erosion control plan with all necessary permits may be submitted 30 days before intended use.

Incorporate all permanent erosion control features into the project at the earliest practicable time, as outlined in the approved plan.

When erosion control measures are not functioning as intended, immediately take corrective action.

# 171 - Weed and Disease Prevention

171.00_nat_us_03_30_2005

## Description

**171.01** This work consists of washing and treating construction equipment to remove seeds, plants, and plant fragments from the equipment before the equipment is used on National Forest System lands.

## Material

**171.02** Conform to the following Subsection:

| | |
|---|---|
| Water | 725.01 |

## Construction Requirements

**171.03 General .** Notify the CO in writing at least 15 days before moving any construction equipment onto National Forest System lands. Construction equipment does not include cars, pickup trucks, and other vehicles that regularly travel between the construction site and areas outside of National Forest System lands.

Perform all work at a location designated on the plans or other locations approved in writing. Provide the CO with an opportunity to monitor the washing and inspection.

**171.04 Equipment.** Use a high pressure washing system.

For work on National Forest System lands, use a washing system that traps all wash water and either stores it for removal from National Forest System lands or recycles the water for continued

use. If the equipment recycles the water, provide adequate filters for seed removal. Dispose of the filter material and removed seeds in an approved manner. Do not mix soaps, detergents, or other chemicals with the wash water.

For work at a commercial washing facility, use an approved facility.

**171.05 Washing.** Wash the sides, tops, and undercarriages of all construction equipment. Remove all seeds, plants, plant fragments, dirt, and debris from the construction equipment.

**171.06 Inspection.** Inspect the washed construction equipment, including the undercarriage, to ensure that the washing removed the dirt, debris, and seeds from the construction equipment. Rewash the construction equipment as necessary or as directed.

**171.07 Acceptance.** Weed prevention will be evaluated under Subsection 106.02.

## Measurement

**171.**08 Do not measure weed prevention for payment.

## Payment

**171.09** Include all costs associated with the Section 171-Weed Prevention in the unit price for Section 151-Mobilization.

# 201 - Clearing and Grubbing

201.00_nat_us_08_05_2009

## 201.02 Material:

Delete Tree wound dressing material reference.

**201.03 General.**

Delete the last sentence.

**201.04 Clearing.**

Delete the last sentence of (d).

201.01_nat_us_02_18_2005

## 201.01 Description

Replace with the following

This work consists of clearing and grubbing within clearing limits and other designated areas.

201.04_nat_us_02_22_2005

## 201.04 Clearing. (c)

Delete paragraph (c) and replace with the following:

> (c) In areas outside the excavation, embankment, and slope rounding limits, cut stumps to within 12 inches or one-third of the stump diameter of the ground, whichever is higher, measured on the side adjacent to the highest ground. For timber sales, stump heights will meet the requirements of the Timber Sale contract.

**201.04 Clearing.**

Delete subsection (d) and replace with the following:

(d) Do not cut vegetation less than 3 feet tall and less than 3 inches in diameter, that is within the clearing limits but beyond the roadway and not in a decking area, and that does not interfere with sight distance along the road.

Add the following:

(e) Trim branches of remaining trees or shrubs to give a clear height of 14 feet above the roadbed unless otherwise indicated. Trim tree limbs as near flush with the trunk as practicable.

(f) Remove brush from log decks. Deck logs so that logs are piled parallel to one another; can be removed by standard log loading equipment; will not damage standing trees; will not interfere with drainage, and will not roll. Keep logs in log decks free of brush and soil.

201.04_nat_us_03_03_2005

## 201.04 Clearing.

Add the following:

Utilization standards for merchantable timber are listed below. Fall and buck merchantable material into lengths not to exceed __40___ feet. Pieces (logs) meet utilization standards when such pieces would have met Utilization Standards if bucking lengths were varied to include such material.

**Minimum Utilization Standards**

| Length | Diameter (Inside Bark) at Small End | __40___% Net Scale in % of Gross Scale |
|---|---|---|
| __12__feet | _____6_____inches | |

201.06_nat_us_02_18_2005

## 201.06 Disposal.

Delete the first sentence of this subsection and substitute the following:

Dispose of merchantable timber designated for removal according to the provisions of the timber sale contract.

201.06_nat_us_11_09_2005

## 201.06 Disposal

Delete the first sentence of this paragraph and substitute the following:

Limb and deck logs that meet utilization standards at locations approved by the CO or otherwise designated. Deck logs according to 201.04 (f).

201.06_nat_us_11_04_2004

## 201.06 Disposal.

Delete the first sentence of this subsection and substitute the following:

Merchantable timber removed from Forest Service land is subject to the Forest Resources Conservation and Shortage Relief Act of 1990 (PL 101-382; 104 Stat. 714-726; 16 USC 620 et. seq.). Do not export timber from the United States or use in direct or indirect substitution for unprocessed timber exported from the United States, from private lands by Purchaser, or any person as defined in Section 493 (16 USC 620e) of the Act.

Unless Forest Service determines that circumstances warrant a written waiver or adjustment, (1) hammer brand all products on both ends with an assigned contract brand before removal from the project site, (2) hammer brand each product exempt from domestic processing on both ends with an exempt brand registered for use on exempt logs from National Forest, and (3) paint all domestic processing products on both ends with 2 inch circle of yellow paint according to Interim Specification 2400-400 (available upon request). Paint or brand products before removing them from project site unless approved by the CO. Brands and yellow paint must remain on logs until they are processed.

Contractor may remanufacture logs into different log lengths as approved. Repaint or rebrand all remanufactured pieces. Pay all surveillance costs except that Forest Service may waive such payment if such costs are minor and part of normal remanufacturing operations.

# 203 - Removal of Structures and Obstructions

203.01_nat_us_02_25_2005

## 203.01 Description.

Delete and replace with the following:

This work consists of disposing of construction slash and debris, salvaging, removing, and disposing of buildings, fences, structures, pavements, culverts, utilities, curbs, sidewalks, and other obstructions.

203.04_nat_us_02_18_2005

## 203.04 Removing Material.

Replace the fourth and fifth paragraphs with the following:

Where part of an existing culvert is removed, remove the entire culvert upstream from the removal. The remaining downstream culvert may be left in place if no portion of the culvert is within 12 inches of the subgrade, embankment slope, or new culvert or structure; and the culvert ends are sealed with concrete.

Remove structures and obstructions in the roadbed to 12 inches below subgrade elevation. Remove structures and obstructions outside the roadbed to 12 inches below finished ground or to the natural stream bottom.

203.05_nat_us_02_18_2005

## 203.05 Disposing of Material.

Add the following:

**(e) Windrowing Construction Slash**. Place construction slash outside the roadway in neat, compacted windrows approximately parallel to and along the toeline of embankment slopes. Do not permit the top of the windrows to extend above subgrade. Use construction equipment to matt down all material in a windrow to form a compact and uniform pile. Construct breaks of at least 15 feet at least every 200 feet in a windrow. Do not place windrows against trees. Obtain approval for pioneer roads. A pioneer road may be constructed to provide an area for placement of windrows, provided the excavated material is kept within the clearing limits and does not adversely affect the road construction.

**(f) Scattering.** Scatter construction slash outside the clearing limits without damaging trees. Limb all logs. Place logs and stumps away from trees, positioned so they will not roll, and are not on top of one another. Limb and scatter other construction slash to reduce slash concentrations.

**(g) Chipping or Grinding.** Use an approved chipping machine to grind slash and stumps greater than 3 inches in diameter and longer than 3 feet. Deposit chips or ground woody material on embankment slopes or outside the roadway to a loose depth less than 6 inches. Minor amounts of chips or ground woody material may be permitted within the roadway if they are thoroughly mixed with soil and do not form a layer.

**(h) Debris Mat.** Use tree limbs, tops, cull logs, split stumps, wood chunks, and other debris to form a mat upon which construction equipment is operated. Place stumps upside down and blend stumps into the mat.

**(i) Decking Firewood Material.** Remove brush from decks. Limb and deck logs that do not meet Utilization Standards according to Subsection 201.04 as directed by the CO. Cut logs to lengths less than 30 feet. Ensure that logs stacks are stable and free of brush and soil.

**(j) Removal to designated locations.** Remove construction slash to designated locations.

**(k) Piling.** Pile construction slash in designated areas. Place and construct piles so that if the piles are burned, the burning will not damage remaining trees. Keep piles free of dirt from stumps. Cut unmerchantable logs into lengths of less than 20 feet.

**(l) Placing Slash on Embankment Slopes**. Place construction slash on completed embankment slopes to reduce soil erosion. Place construction slash as flat as practicable on the completed slope. Do not place slash closer than 2 feet below subgrade. Priority for use of available slash is for: (1) through fills; (2) insides of curves; and (3) ditch relief outlets.

**(m) Hydrological Sensitive Placement**. Where required use this method in combination with other designated methods to dispose of material to reduce erosion and to aid in re-vegetation:

1. Place windrow segments on contours, wrap in type I geotextile.
2. Place logs as log erosion barriers on contours. Place logs so that 80% of their length is on the ground surface.
3. Scatter slash on bare or disturbed areas within or outside the clearing limits as directed.
4. Scatter chips or ground woody material on bare or disturbed areas within or outside the clearing limits as directed.

Place stumps in swales or on sites to form planting pockets. Place windrow segments on contours, wrap in type I geotextile.

# 204 - Excavation and Embankment

204.00_nat_us_03_26_2009

**Replace Section 204 in its entirety with the following:**

**Description**

**204.01** This work consists of excavating material and constructing embankments. This includes furnishing, hauling, stockpiling, placing, disposing, sloping, shaping, compacting, and finishing earthen and rocky material.

**204.02 Definitions.**

**(a) Excavation.** Excavation consists of the following:

**(1) Roadway excavation.** All material excavated from within the right-of-way or easement areas, except subexcavation covered in (2) below and structure excavation covered in Sections 208 and 209. Roadway excavation includes all material encountered regardless of its nature or characteristics.

**(2) Subexcavation.** Material excavated from below subgrade elevation in cut sections or from below the original groundline in embankment sections. Subexcavation does not include the work required by Subsections 204.05, 204.06(b), and 204.06(c).

**(3) Borrow excavation.** Material used for embankment construction that is obtained from outside the roadway prism. Borrow excavation includes unclassified borrow, select borrow, and select topping.

**(b) Embankment construction.** Embankment construction consists of placing and compacting roadway or borrow excavation. This work includes:

**(1)** Preparing foundation for embankment;
**(2)** Constructing roadway embankments;
**(3)** Benching for side-hill embankments;
**(4)** Constructing dikes, ramps, mounds, and berms; and
**(5)** Backfilling subexcavated areas, holes, pits, and other depressions.

**(c) Conserved topsoil.** Excavated material conserved from the roadway excavation and embankment foundation areas that is suitable for growth of grass, cover crops, or native vegetation.

**(d) Waste.** Excess and unsuitable roadway excavation and subexcavation that cannot be used.

## Material

**204.03** Conform to the following Subsections:

| | |
|---|---|
| Backfill material | 704.03 |
| Select borrow | 704.07 |
| Select topping | 704.08 |
| Topping | 704.05 |
| Unclassified borrow | 704.06 |
| Water | 725.01 |

## Construction Requirements

**204.04 Preparation for Roadway Excavation and Embankment Construction.** Clear the area of vegetation and obstructions according to Sections 201 and 203.

**204.05 Reserved.**

**204.06 Roadway Excavation.** Excavate as follows:

**(a) General.** Do not disturb material and vegetation outside the construction limits. Incorporate only suitable material into embankments. Replace any shortage of suitable material caused by premature disposal of roadway excavation. Dispose of unsuitable or excess excavation material according to Subsection 204.14.

At the end of each day's operations, shape to drain and compact the work area to a uniform cross-section. Eliminate all ruts and low spots that could hold water.

Retrieve material deposited outside of the clearing limits as directed by the CO. Place unsuitable material in designated areas.

**(b) Rock cuts.** Blast rock according to Section 205. Excavate rock cuts to 6 inches below subgrade within the roadbed limits. Backfill to subgrade with topping or with other suitable material. Compact the material according to Subsection 204.11

**(c) Earth cuts.** Scarify earth cuts to 6 inches below subgrade within the roadbed limits. Compact the scarified material according to Subsection 204.11.

**(d) Pioneer Roads**. Road pioneering, slash disposal, and grubbing of stumps may proceed concurrently with excavation. Conduct excavation and placement operations so material to be treated under Section 201 will not be incorporated into the roadway unless specified in the slash treatment method. Maintain drainage during pioneering operations.

Remove snow and ice in advance of the work and deposit beyond the roadway limits in a manner that will not waste material or generate sediment. Do not incorporate snow and ice into embankments. Place snow or ice in a manner to prevent resource damage.

**204.07 Subexcavation.** Excavate material to the limits designated by the CO. Take cross-sections according to Section 152. Prevent unsuitable material from becoming mixed with the backfill. Dispose of unsuitable material according to Subsection 204.14. Backfill the subexcavation with topping, or other suitable material. Compact the material according to Subsection 204.11.

**204.08 Borrow Excavation.** Use all suitable roadway excavation in embankment construction. Do not use borrow excavation when it results in excess roadway excavation. Deduct excess borrow excavation from the appropriate borrow excavation quantity.

Obtain borrow source acceptance according to Subsection 105.02. Develop and restore borrow sources according to Subsection 105.03. Do not excavate beyond the established limits. When applicable, shape the borrow source to permit accurate measurements when excavation is complete.

**204.09 Preparing Foundation for Embankment Construction.** Prepare foundation for embankment construction as follows:

**(a) Embankment less than 4 feet high over natural ground.** When designated, remove topsoil and break up the ground surface to a minimum depth of 6 inches by plowing or scarifying. Compact the ground surface according to Subsection 204.11.

**(b) Embankments over an existing asphalt, concrete, or gravel road surface.** Scarify gravel roads to a minimum depth of 6 inches. Scarify or pulverize asphalt and concrete roads to 6 inches below the pavement. Reduce all particles to a maximum size of 6 inches and produce a uniform material. Compact the surface according to Subsection 204.11.

**(c) Embankment across ground not capable of supporting equipment.** Dump successive loads of embankment material in a uniformly distributed layer to construct the lower portion of the embankment. Limit the layer thickness to the minimum depth necessary to support the equipment.

**(d) Embankment on an existing slope steeper than 1V:3H.** Cut horizontal benches in the existing slope to a sufficient width to accommodate placement and compaction operations and equipment. Bench the slope as the embankment is placed and compacted in layers. Begin each bench at the intersection of the original ground and the vertical cut of the previous bench.

**204.10 Embankment Construction.** Incorporate only suitable roadway excavation material into the embankment. When the supply of suitable roadway excavation is exhausted, furnish unclassified borrow to complete the embankment. Obtain written approval before beginning construction of embankments over 6 feet high at subgrade centerline. Construct embankments as follows:

**(a) General.** At the end of each day's operations, shape to drain and compact the embankment surface to a uniform cross-section. Eliminate all ruts and low spots that could hold water.

During all stages of construction, route and distribute hauling and leveling equipment over the width and length of each layer of material.

Compact embankment side slopes flatter than 1V:1.75H with a tamping type roller or by walking with a dozer. For slopes 1V:1.75H or steeper, compact the slopes as construction of the embankment progresses.

Where placing embankment on one side of abutments, wing walls, piers, or culvert headwalls, compact the material using methods that prevent excessive pressure against the structure.

Where placing embankment material on both sides of a concrete wall or box structure, conduct operations so compacted embankment material is at the same elevation on both sides of the structure.

Where structural pilings are placed in embankment locations, limit the maximum particle size to 4 inches.

**(b) Embankment within the roadway prism**. Place embankment material in horizontal layers not exceeding 12 inches in compacted thickness. Incorporate oversize boulders or rock fragments into the 12-inch layers by reducing them in size or placing them individually as required by (c) below. Compact each layer according to Subsection 204.11 before placing the next layer.

Material composed predominately of boulders or rock fragments too large for 12-inch layers may be placed in layers up to 24 inches thick. Incorporate oversize boulders or rock fragments into the 24-inch layer by reducing them in size or placing them individually according to (c) below. Place sufficient earth and smaller rocks to fill the voids. Compact each layer according to Subsection 204.11 before placing the next layer.

**(c) Individual rock fragments and boulders.** Place individual rock fragments and boulders greater than 24 inches in diameter as follows:

**(1)** Reduce rock to less than 48 inches in the largest dimension.
**(2)** Distribute rock within the embankment to prevent nesting.
**(3)** Place layers of embankment material around each rock to a depth not greater than that permitted by (b) above. Fill all the voids between rocks.
**(4)** Compact each layer according to Subsection 204.11 before placing the next layer.

**(d) Embankment outside of roadway prism.** Where placing embankment outside the staked roadway prism, place material in horizontal layers not exceeding 24 inches in compacted thickness. Compact each layer according to Subsection 204.11.

**204.11 Compaction.** Compact the embankment using one of the following methods as specified:

**(a) <u>Compaction A.</u>** Use AASHTO T 27 to determine the amount of material retained on a Number 4 sieve. If there is more than 80 percent retained on the No. 4 sieve use procedure (1).

If there is 50 to 80 percent retained on the No. 4 sieve use procedure (2). If there is less than 50 percent retained on the No. 4 sieve use procedure (3).

**(1)** Adjust the moisture content to a level suitable for compaction. Fill the interstices around rock with earth or other fine material as practical. Use compression-type rollers at speeds less than 6feet per second and vibratory rollers at speeds less than 3 feet per second. Compact each layer of material full width with one of the following and until there is no visible evidence of further consolidation.

*(a)* Four roller passes of a vibratory roller having a minimum dynamic force of 40,000 pounds impact per vibration and a minimum frequency of 1000 vibrations per minute.
*(b)* Eight roller passes of a 20-ton compression-type roller.
*(c)* Eight roller passes of a vibratory roller having a minimum dynamic force of 30,000 pounds impact per vibration and a minimum frequency of 1000 vibrations per minute.

Increase the compactive effort for layers deeper than 12 inches as follows:

- For each additional 6 inches or fraction thereof, increase the number of roller passes in (a) above by four passes.
- For each additional 6 inches or fraction thereof, increase the number of roller passes in (b) and (c) above, by eight passes.

**(2)** Use AASHTO T 99 to determine the optimum moisture content of the portion of the material passing a No. 4 sieve. Multiply this number by the percentage of material passing a No. 4 sieve, and add 2 percent to determine the optimum moisture content of the material. Adjust the moisture content of material classified A-1 through A-5 to a moisture content suitable for compaction. Adjust the moisture content of material classified A-6 and A-7 to within 2 percent of the optimum moisture content.

Use compression-type rollers at speeds less than 6 feet per second and vibratory rollers at speeds less than 3 feet per second. Compact each layer of material full width according to (1) above.

**(3)** Classify the material according to AASHTO M 145. For material classified A-1 or A-2-4, determine the maximum density according to AASHTO T 180, method D. For other material classifications, determine the optimum moisture content and maximum density according to AASHTO T 99, method C.

Adjust the moisture content of material classified A-1 through A-5 to a moisture content suitable for compaction. Adjust the moisture content of material classified A-6 and A-7 to within 2 percent of the optimum moisture content.

Use compression-type or vibratory rollers. Compact each layer of material full width to at least 95 percent of the maximum density. Determine the in-place density and moisture content according to AASHTO T 310 or other approved test procedures. When required, use AASHTO T 224 to correct for coarse particles.

**(b) <u>Compaction B.</u>** Place material by end dumping to the minimum depth needed for operation of spreading equipment. Adjust the moisture content of the material to obtain a mass that will not visibly deflect under the load of the hauling and spreading equipment. Operate compaction equipment over the full width of each layer until there is no visible evidence of further consolidation or, if when a sheepsfoot roller is used, the roller "walks out" of the layer. Make at least three complete passes.

**(c) <u>Compaction C.</u>** Place material by end dumping to the minimum depth needed for operation of spreading equipment. Level and smooth each embankment layer before placing the next layers. Operate hauling and spreading equipment uniformly over the full width of each layer. Construct a solid embankment with adequate compaction by working smaller rock and fines in with the larger rocks to fill the voids, and by operating hauling and spreading equipment uniformly over the full width of each layer as the embankment is constructed.

**204.12 Ditches.** Slope, grade, and shape ditches. Remove all projecting roots, stumps, rock, or similar matter. Maintain all ditches in an open condition and free from leaves, sticks, and other debris.

Form furrow ditches by plowing or using other acceptable methods to produce a continuous furrow. Place all excavated material on the downhill side so the bottom of the ditch is approximately 18 inches below the crest of the loose material. Clean the ditch using a hand shovel, ditcher, or other suitable method. Shape to provide drainage without overflow.

**204.13 Sloping, Shaping, and Finishing.** Complete slopes, ditches, culverts, riprap, and other underground minor structures before placing aggregate courses. Slope, shape, and finish as follows:

**(a) Sloping.** Leave all earth slopes with uniform roughened surfaces, except as described in (b) below, with no noticeable break as viewed from the road. Except in solid rock, round tops and bottoms of all slopes including the slopes of drainage ditches. Round material overlaying solid rock to the extent practical. Scale all rock slopes. Slope rounding is not required on tolerance class D though M roads.

If a slide or slipout occurs on a cut or embankment slope, remove or replace the material, and repair or restore all damage to the work. Bench or key the slope to stabilize the slide. Reshape the cut or embankment slope to an acceptable condition.

**(b) Stepped slopes.** Where required by the contract, construct steps on slopes of 1⅓V:1H to 1V:2H. Construct the steps approximately 18 inches high. Blend the steps into natural ground at the end of the cut. If the slope contains nonrippable rock outcrops, blend steps into the rock. Remove loose material found in transitional area. Except for removing large rocks that may fall, scaling stepped slopes is not required.

**(c) Shaping.** Shape the subgrade to a smooth surface and to the cross-section required. Shape slopes to gradually transition into slope adjustments without noticeable breaks. At the ends of

cuts and at intersections of cuts and embankments, adjust slopes in the horizontal and vertical planes to blend into each other or into the natural ground.

**(d) Finishing.** Finish the roadbed to be smooth and uniform, and shaped to conform to the typical sections. Remove unsuitable material from the roadbed and replace it with suitable material. Finish roadbeds to the tolerance class shown in table 204-2.Ensure that the subgrade is visibly moist during shaping and dressing. Scarify to 6 inches below the bottom of low sections, holes, cracks, or depressions and bring back to grade with suitable material. Maintain proper ditch drainage.

For surfaced roads, remove all material larger than 6 inches from the top 6 inches of the roadbed.

For unsurfaced roads, use one of the following methods to finish the roadbed:

**(1)** **Method A**. Remove all material larger than 6 inches from the top 6 inches of the roadbed and replace with suitable material.
**(2)** **Method B**. Use a vibratory grid roller or approved equal with a minimum weight of 10 tons. Roll at least 5 full-width passes or until there is no visible evidence of further consolidation.
**(3)** **Method C**. For roads designated as Construction Tolerance Class K, L, or M, finish the roadbed by spreading the excavation. Eliminate rock berms.

**204.14 Disposal of Unsuitable or Excess Material.** Dispose of unsuitable or excess material at designated sites or legally off of the project.

When there is a pay item for waste, shape and compact the waste material in its final location. Do not mix clearing or other material not subject to payment with the waste material.

**204.15 Acceptance.** See Table 204-1 for sampling and testing requirements.

Material for embankment and conserved topsoil will be evaluated under Subsections 106.02 and 106.04.

Excavation and embankment construction will be evaluated under Subsections 106.02 and 106.04.

Clearing and removal of obstructions will be evaluated under Sections 201 and 203.

## Measurement

**204.16** Measure the Section 204 items listed in the bid schedule according to Subsection 109.02 and the following as applicable.

**(a) Roadway excavation.** Measure roadway excavation in its original position as follows:

**(1)** Include the following volumes in roadway excavation:
*(a)* Roadway prism excavation;

*(b)* Rock material excavated and removed from below subgrade in cut sections;
*(c)* Unsuitable material below subgrade and unsuitable material beneath embankment areas when a pay item for subexcavation is not shown in the bid schedule;
*(d)* Ditches, except furrow ditches measured under a separate bid item;
*(e*Topsoil;
*(f)* Borrow material used in the work when a pay item for borrow is not shown in the bid schedule;
*(g)* Loose scattered rocks removed and placed as required within the roadway;
*(h)* Conserved material taken from stockpiles and used in Section 204 work; and
*(i)* Slide and slipout material not attributable to the Contractor's method of operation.

**(2)** Do not include the following in roadway excavation:
*(a)* Overburden and other spoil material from borrow sources;
*(b)* Overbreakage from the backslope in rock excavation;
*(c)* Water or other liquid material;
*(d)* Material used for purposes other than required;
*(e)* Roadbed material scarified in place and not removed;
*(f)* Material excavated when stepping cut slopes;
*(g)* Material excavated when rounding cut slopes;
*(h)* Preparing foundations for embankment construction;
*(i)* Material excavated when benching for embankments;
*(j)* Slide or slipout material attributable to the Contractor's method of operation;
*(k)* Conserved material taken from stockpiles constructed at the option of the Contractor; and
*(l)* Material excavated outside the established slope limits.

**(3)** When both roadway excavation and embankment construction pay items are shown in the bid schedule, measure the following as roadway excavation only:
*(a)* Unsuitable material below subgrade in cuts and unsuitable material beneath embankment areas when a pay item for subexcavation is not shown in the bid schedule;
*(b)* Slide and slipout material not attributable to the Contractor's method of operations; and
*(c)* Drainage ditches, channel changes, and diversion ditches.

**(b) Unclassified borrow, select borrow, and select topping.** When measuring by the cubic yard measure in its original position. If borrow excavation is measured by the cubic yard in place, take initial cross-sections of the ground surface after stripping overburden. Upon completion of excavation and after the borrow source waste material is returned to the source, retake cross-sections before replacing the overburden.
Do not measure borrow excavation used in place of excess roadway excavation.

**(c) Embankment construction.** Measure embankment construction in its final position. Do not make deductions from the embankment construction quantity for the volume of minor structures.

**(1)** Include the following volumes in embankment construction:
*(a)* Roadway embankments;
*(b)* Material used to backfill subexcavated areas, holes, pits, and other depressions;
*(c)* Material used to restore obliterated roadbeds to original contours; and
*(d)* Material used for dikes, ramps, mounds, and berms.

**(2)** Do not include the following in embankment construction:
*(a)* Preparing foundations for embankment construction;
*(b)* Adjustments for subsidence or settlement of the embankment or of the foundation on which the embankment is placed; and
*(c)* Material used to round fill slopes.

**(d) Rounding cut slopes**. Measure rounding cut slopes horizontally along the centerline of the roadway if a pay item for slope rounding is included in the bid schedule. If a pay item for slope rounding is not included in the bid schedule slope rounding will be considered subsidiary to excavation.

**(e) Waste.** Measure waste by the cubic yard in its final position. Take initial cross-sections of the ground surface after stripping over burden. Upon completion of the waste placement, retake cross-sections before replacing overburden.

**(f) Slope scaling.** Measure slope scaling by the cubic yard in the hauling vehicle.

## Payment

**204.17** The accepted quantities will be paid at the contract price per unit of measurement for the Section 204 pay items listed in the bid schedule. Payment will be full compensation for the work prescribed in this Section. See Subsection 109.05.

**Table 204-1**
**Sampling and Testing Requirements**

| Material or Product | Type of Acceptance (Subsection) | Characteristic | Category | Test Methods Specifications | Sampling Frequency | Point of Sampling | Split Sample | Reporting Time |
|---|---|---|---|---|---|---|---|---|
| Topping (704.05) & unclassified borrow (704.06) | Measured and tested for conformance (106.04) | Classification | — | AASHTO M 145 | 1 per soil type | Processed material before incorporating in work | Yes, when requested | Before using in work |
| | | Moisture-density | — | AASHTO T 180, method D[1] or T 99, method C[1] | 1 per soil type but not less than 1 per | " | " | " |
| | | Compaction | — | AASHTO T 310 or other approved procedures | 1 per 6000 $yd^2$ but not less than 1 per layer | In-place | — | Before placing next layer |
| Select borrow (704.07 & Select topping (704.08) | Measured and tested for conformance (106.04) | Classification | — | AASHTO M 145 | 1 per soil type but not less than 1 for each day of production | Processed material before incorporating | Yes, when requested | Before using in work |
| | | Gradation | — | AASHTO T 27 | " | " | " | " |
| | | Liquid limit | — | AASHTO T 89 | " | " | " | " |
| | | Moisture-density | — | AASHTO T 180, method D[1] or T 99, method C[1] | 1 per soil type but not less than 1 per | " | " | " |
| | | Compaction | — | AASHTO T 310 or other approved procedures | 1 per 6000 $yd^2$ but not less than 1 per layer | In-place | — | Before placing next layer |

(1) Minimum of 5 points per proctor

**Table 204-1 (continued)**
**Sampling and Testing Requirements**

| Material or Product | Type of Acceptance (Subsection) | Characteristic | Category | Test Methods Specifications | Sampling Frequency | Point of Sampling | Split Sample | Reporting Time |
|---|---|---|---|---|---|---|---|---|
| Earth embankment (204.11, Compaction A) | Measured and tested for conformance (106.04) | Classification | — | AASHTO M 145 | 1 per soil type | Source of Material | Yes, when requested | Before using in work |
| | | Moisture-density | — | AASHTO T 180, method D[1] or T 99, method C[1] | 1 per soil type but not less than 1 per 13,000 $yd^3$ | " | " | " |
| | | Compaction | — | AASHTO T 310 or other approved procedures | 1 per 3500 $yd^2$ but not less than 1 per layer | In-place | — | Before placing next layer |
| Top of subgrade (204.11 Compaction A) | Measured and tested for conformance (106.04) | Compaction | — | AASHTO T 310 or other approved procedures | 1 per 2500 $yd^2$ | In-place | — | Before placing next layer |

(1) Minimum of 5 points per proctor.

**Table 204-2**
**Construction Tolerances**

| | Tolerance Class [a] | | | | | | | | | | | | |
|---|---|---|---|---|---|---|---|---|---|---|---|---|---|
| | **A** | **B** | **C** | **D** | **E** | **F** | **G** | **H** | **I** | **J** | **K** | **L** | **M** |
| Roadbed width (ft) | +0.5 | +0.5 | +1.0 | +1.0 | +1.0 | +1.0 | +1.5 | +1.0 | +2.0 | +2.0 | +2.0 | +2.0 | +2.0 |
| Subgrade elevation (ft) | ±0.1 | ±0.2 | ±0.2 | ±0.5 | ±0.5 | ±1.0 | ±1.0 | ±1.5 | ±2.0 | ±3.0 | ±2.0 | ±3.0 | (c) |
| Centerline alignment (ft) | ±0.2 | ±0.2 | ±0.5 | ±0.5 | ±1.0 | ±1.0 | ±1.5 | ±1.5 | ±2.0 | ±3.0 | ±3.0 | ±5.0 | (c) |
| Slopes, excavation, and embankment (% slope[b]) | ±3 | ±5 | ±5 | ±5 | ±5 | ±5 | ±10 | ±10 | ±10 | ±10 | ±20 | ±20 | ±20 |

(a) Maximum allowable deviation from construction stakes and drawings.
(b) Maximum allowable deviation from staked slope measured from slope stakes or hinge points.
(c) Unless otherwise shown the centerline alignment and subgrade elevation, as built, have no horizontal curves with a radius of less than 80 feet, and no vertical curves with a curve length of less than 80 feet when the algebraic difference in the grade change is less than 10 percent, or a curve length of less than 100 feet when the algebraic difference of the grade change is greater than or equal to 10 percent. The centerline grade is not to exceed 20 percent in 100 feet of length.

# 322 - Minor Aggregate Courses

322.00_nat_us_10_14_2011

## Description

**322.01** This work consists of constructing one or more courses of aggregate on a prepared surface. Work includes producing aggregate by grid rolling, screening, or crushing methods, or placing pit-run or Government-furnished aggregate.

Surface aggregate grading is designated as shown in Table 703-3.

Subbase and base aggregate grading is designated as shown in Table 703-2.

Screened aggregate grading is designated as shown in Table 703-16.

## Material

**322.02** Conform to the following Subsections:

| | |
|---|---|
| Aggregate | 703.05 |
| Water | 725.01 |

## Construction Requirements

**322.03 General.** Prepare the surface on which the aggregate course is placed according to Section 204 or 303 as applicable.

Request approval of the roadbed in writing before placing aggregate.

Develop, haul, and apply water in accordance to Section 170.

Submit target values within the gradation ranges shown in Table 703-2 or 703-3 for the required grading. After reviewing the proposed target values the CO will determine the final values for the gradation and notify the Contractor in writing.

No quality requirements or gradation other than maximum size will be required for pit run and grid-rolled material. For grid rolling, use all suitable material that can be reduced to maximum size.

After processing on the road, remove all oversize material from the road and dispose of it as directed by the CO.

If the aggregate is produced and stockpiled before placement, handle and stockpiled according to Section 320. Establish stockpile sites at approved locations.

**322.04 Mixing and Spreading.** Mix the aggregate and adjust the moisture content to obtain a uniform mixture with a moisture content suitable for the specified compaction method. Spread and shape the mixture on the prepared surface in a uniform layer with no segregation of size, and to a loose depth that will provide the required compacted thickness.

Do not place in layers exceeding 6 inches in compacted thickness for aggregate base and surface courses or twice the maximum particle size for screened aggregate. When more than one layer is necessary, compact each layer according to Subsection 322.05 before placing the next layer. Route hauling and leveling equipment uniformly over the full width.

When placing aggregate over geotextile, place aggregate in a single lift to the full depth specified.

**322.05 Compacting.** Compact each layer full width. Roll from the sides to the center, parallel to the centerline of the road. Along curbs, headers, walls, and all places not accessible to the roller, compact the material with approved tampers or compactors.

Compact the aggregate using one of the following methods as specified:

**Compaction A**. Operating spreading and hauling equipment over the full width of the travelway.

**Compaction B**. Operate rollers and compact as specified in Subsection 204.11(a)(1).

**Compaction C**. Moisten or dry the aggregate to a uniform moisture content between 5 and 7 percent based on total dry weight of the mixture. Operate rollers and compact as specified in Subsection 204.11(a)(1).

**Compaction D**. Compact to a density of at least 95 percent of the maximum density, as determined by AASHTO T 99, method C or D.

**Compaction E**. Removed.

**Compaction F**. Compact to a density of at least 95 per-cent of the maximum density, as determined by AASHTO T 180, method C or D.

**Compaction G**. Removed.

For all compaction methods, blade the surface of each layer during the compaction operations to remove irregularities and produce a smooth, even surface. When a density requirement is specified, determine the in place density and moisture content according to AASHTO T 310 or other approved test procedures.

**322.06 Construction Tolerance.** If grade finishing stakes are required, finish the surface to within ±0.10 feet from staked line and grade elevation.

If grade finishing stakes are not required, shape the surface to the required template and check the surface with a 10-foot straightedge. Defective areas are surface deviations in excess of 1/2 inch in 10 feet between any two contacts of the straightedge with the surface.

Correct all defective areas by loosening the material, adding or removing material, reshaping, and compacting.

Ensure that the compacted thickness is not consistently above or below the specified thickness. The maximum variation from the compacted specified thickness is ½ inch.

Ensure that the compacted width is not consistently above the specified width. The maximum variation from the specified width will not exceed +12 inches at any point.

**322.07 Maintenance.** Maintain the aggregate course to the correct line, grade, and cross-section by blading, watering, rolling, or any combination thereof until placement of the next course. Correct all defects according to Subsection 322.06.

**322.08 Acceptance.** See Table 322-1 or Table 322-2 as applicable, for sampling and testing requirements.

Aggregate gradation and surface course plasticity index will be evaluated under Subsection 106.04. If the aggregate is obtained from a Government stockpile then the above characteristics will be evaluated under Subsection 106.02. Other aggregate quality properties will be evaluated under Subsections 106.02 and 106.04. Placement of aggregate courses will be evaluated under Subsections 106.02 and 106.04.

The allowable upper and lower aggregate gradation limits are the Target Value plus or minus the allowable deviations shown in Tables 703-2 and 703-3.

The allowable upper and lower Plasticity index limits for surface courses are stated in 703.05(b).

Preparation of the surface on which the aggregate course is placed will be evaluated under Section 204 or 303 as applicable.

## Measurement

**322.09** Measure the Section 322 items listed in the bid schedule according to Subsection 109.02 and the following as applicable.

Measure square yard width horizontally to include the top of aggregate width including designed widening. Measure the square yard length horizontally along the centerline of the roadway.

If the measurement for aggregate is by cubic yard using contract quantities then measure aggregate by the cubic yard in-place once compacted, otherwise measurement for aggregate by the cubic yard is measured by the cubic yard in the hauling vehicle.

Measure thickness perpendicular to the grade of the travelway.

Measure width perpendicular to the centerline.

## Payment

**322.10** The accepted quantities will be paid at the contract price per unit of measurement for the Section 322 pay items listed in the bid schedule. Payment will be full compensation for the work prescribed in this Section. See Subsection 109.05.

**Table 322-1**
**Sampling and Testing Requirements**

| Material or Product | Type of Acceptance (Subsection) | Characteristic | Category | Test Methods Specifications | Sampling Frequency | Point of Sampling | Split Sample | Reporting Time |
|---|---|---|---|---|---|---|---|---|
| Aggregate source quality 703.05 | Measured and tested for conformance (106.04 & 105) | LA abrasion (coarse) | — | AASHTO T 96 | 1 per type & source of material | Source of material | Yes, when requested | Before using in work |
| | | Sodium sulfate soundness loss (coarse & fine) | — | AASHTO T 104 | " | " | " | " |
| | | Durability index (coarse & fine) | — | AASHTO T 210 | " | " | " | " |
| | | Fractured faces | — | ASTM D 5821 | " | " | " | " |
| Subbase, Base, and Surface courses | Measured and tested for conformance (106.04) | Sample | — | AASHTO T 2 | 2 per day | From windrow or roadbed after processing or from approved crusher sampling device | Yes | 48 hours |

**Table 322-1 (continued)**
**Sampling and Testing Requirements**

| Material or Product | Type of Acceptance (Subsection) | Characteristic | Category | Test Methods Specifications | Sampling Frequency | Point of Sampling | Split Sample | Reporting Time |
|---|---|---|---|---|---|---|---|---|
| Subbase, Base, and Surface | Measured and tested for conformance (106.04) | Moisture-density Method D | — | AASHTO T 99 (1) | 1 per type and source of material | Source of material | Yes, when requested | Before using in work |
| | | | — | | " | " | " | " |
| | | Moisture-density Method F | — | AASHTO T 180(1) | " | " | " | " |
| | | | — | | " | " | " | " |
| | | In-place density & moisture content | — | AASHTO T 310 or other approved procedures | 3 per day | In-place | — | Before placing next layer |

**Table 322-2**
**Sampling and Testing Requirements**

| Material or Product | Type of Acceptance (Subsection) | Characteristic | Category | Test Methods Specifications | Sampling Frequency | Point of Sampling | Split Sample | Reporting Time |
|---|---|---|---|---|---|---|---|---|
| Screened Aggregate | Measured and tested for conformance (106.04 ) | Sample | — | AASHTO T 2 | 2 per day | From windrow or roadbed after processing or from approved crusher sampling device | Yes | 48 hours |

# 625 - Turf Establishment

625.03_nat_us_07_02_2007

## 625.03 General.

Delete this subsection and replace with the following:

Apply turf establishment to prepared ground or any disturbed area between ***06/01*** and ***10/31***. Apply turf establishment to the areas shown on the plans or worklists within ***7*** days after completion of ground disturbing activities. Unless otherwise specified in writing by the CO apply turf establishment after each ***2,000*** foot section of road has been constructed to template lines. Seeded areas damaged by construction activities shall be reseeded within 10 days of the damage. Do not seed during windy weather or when the ground is excessively wet, frozen, or snow covered.

Assure that all seed and mulch used in the work conforms to the weed free requirements of Section 713.

## 625.04 Preparing Seedbed.

Delete entire subsection and replace with the following:

Ensure that the surface soil is in a roughened condition favorable for germination and growth.

## 625.05 Watering

Delete entire subsection.

## 625.06 Fertilizing.

Delete entire subsection and replace with the following:

Apply fertilizer having a chemical analysis as listed below by the following methods.

**(a) Dry Method.** Apply the fertilizer with approved mechanical equipment. Hand operated methods are satisfactory on areas inaccessible to mechanical equipment.

**(b) Hydraulic method.** Use hydraulic-type equipment capable of providing a uniform application using water as the carrying agent. Add fertilizer to the slurry and mix before adding seed. Add the tracer material when designated by the CO.

**Fertilizer.** Apply fertilizer at the rate of ***XXXX*** pounds per acre. Insure that the fertilizer meets the following chemical analysis:

| Nutrient | Percent |
|---|---|
| Nitrogen, N . . . . . | ***XXXXXX*** |
| Phosphorus, $P_2 0_5$ . . . . . | ***XXXXXX*** |
| Potassium, K . . . . . | ***XXXXXX*** |

**625.07 Seeding.**

Delete the first sentence and add the following.

Apply seed mix by the following methods**:**

**(a) Dry method.** Delete the third sentence.

Add the following after subsection (b).

**Seed Mix**. Furnish and apply the following kinds and amounts of pure live seed:

| Type of Seed | Quantity of Pure Live Seed (Lbs/Acre) |
|---|---|
| 1. Government Furnished | 15 Lbs / Acre |
| 2. | |
| 3. | |
| 4. | |
| 5. | |
| 6. | |
| 7. | |
| Total | 100 lbs |

Determine the pounds of seed to be furnished per acre by dividing the pounds of pure live seed required per acre by the product of the percent purity and percent germination.

## 625.08 Mulching.

Delete the entire subsection and replace with the following:

Apply Mulch within ***24*** hours after seeding by the following methods.

> **(a) Dry Method.** Apply mulch with a hand spreader or a spreader utilizing forced air at a rate of ***4,000*** pounds per acre. Anchor the mulch with an approved stabilizing emulsion tackifier at a rate of ***N/A*** gallons per acre. Do not mark or deface structure, pavements, utilities, or plant growth with tackifier.
>
> **(b) Hydraulic Method.** Apply mulch in a separate application from the seed using hydraulic-type equipment according to Subsection 625.07(b).
>
> Apply wood fiber or grass straw cellulose fiber mulch at a rate of ***N/A*** pounds per acre.
>
> Apply bonded fiber matrix hydraulic mulch at a minimum rate of ***N/A*** pounds per acre. Apply so no hole in the matrix is greater than 0.04 inches. Apply so that no gaps exist between the matrix and the soil.

Inaccessible areas may be mulched by hand. Apply mulch uniformly over the entire disturbed area.

## 625.09 Protecting and Caring for Seeded Areas

Delete the first sentence and add the following:

Protect and care for seeded areas until final acceptance.

## 625.11 Measurement.

Delete the entire Subsection and replace with the following:

Measure the Section 625 items listed in the bid schedule according to Subsection 109.02.

# 635 - Temporary Traffic Control

635.03_nat_us_05_13_2004

## 635.03 General.

Add the following:

Install temporary traffic control signs to temporary posts or approved temporary sign mounts.

# 651 – Development of Pits and Quarries

**651.01** This work consists of clearing, grubbing, stripping topsoil, removing overburden, constructing access roads, conducting restoration activities, and performing other incidental work required for pit or quarry development.

## Construction Requirements

**651.02 General.** Submit a plan of operations according to Section 105. Perform all work in accordance with Sections 105, 201, 203, 204, 625, and 635, landscape preservation requirements, and the approved pit and quarry development plan of operations. Perform the work in accordance with MSHA 30 CFR, part 56.

**651.03 Acceptance.** Developing pits and quarries will be evaluated under Subsections 106.02 and 106.04.

## Measurement

**651.04** Measure the Section 651 items listed in the bid schedule according to Subsection 109.02.

## Payment

**651.05** The accepted quantities will be paid at the contract price per unit of measurement for the Section 651 pay items listed in the bid schedule. Payment will be full compensation for the work prescribed in this Section. See Subsection 109.05.

# 703 – Aggregate

**Delete 703.05 and replace with the following:**

## 703.05 Subbase, Base, Surface Course, and Screened Aggregate.

**(a) Subbase or base aggregate.** Furnish hard, durable particles or fragments of crushed stone, crushed slag, or crushed gravel conforming the following:

| | |
|---|---|
| **(1)** Gradation | Table 703-2 |
| **(2)** Liquid limit, AASHTO T 89 | 25 max. |
| **(3)** Plastic limit, AASHTO T 90 | Nonplastic |
| **(4)** Los Angeles abrasion, AASHTO T 96 | 40% max. |
| **(5)** Sodium sulfate soundness loss (5 cycles), AASHTO T 104 | 12% max. |
| **(6)** Durability index (coarse), AASHTO T 210 | 35 min. |
| **(7)** Durability index (fine), AASHTO T 210 | 35 min. |
| **(8)** Fractured faces, ASTM D 5821 | 50% min. |
| **(9)** Free from organic matter and lumps or balls of clay | |

Do not use material that breaks up when alternately frozen and thawed or wetted and dried.

Obtain the aggregate gradation by crushing, screening, and blending processes as necessary. Fine aggregate, material passing the No. 4 sieve, shall consist of natural or crushed sand and fine mineral particles.

**(b) Surface course aggregate.** Furnish hard, durable particles or fragments of crushed stone, crushed slag, or crushed gravel conforming the following:

| | |
|---|---|
| **(1)** Gradation | Table 703-3 |
| **(2)** Liquid limit, AASHTO T 89 | 35 max. |
| **(3)** Plastic Index, AASHTO T 90 | |
| a) If the percent passing the No. 200 sieve is less than 12% | 2 to 9 |
| b) If the percent passing the No. 200 sieve is greater than 12% | Less than 2 |
| **(4)** Los Angeles abrasion, AASHTO T 96 | 40% max. |
| **(5)** Sodium sulfate soundness loss (5 cycles), AASHTO T 104 | 12% max. |
| **(6)** Durability index (coarse), AASHTO T 210 | 35 min. |
| **(7)** Durability index (fine), AASHTO T 210 | 35 min. |
| **(8)** Fractured faces, ASTM D 5821 | 75% min. |
| **(9)** Free from organic matter and lumps or balls of clay | |

Do not use material that breaks up when alternately frozen and thawed or wetted and dried.

Do not furnish material that contains asbestos fibers.

Obtain the aggregate gradation by crushing, screening, and blending processes as necessary. Fine aggregate, material passing the No. 4 sieve, shall consist of natural or crushed sand and fine mineral particles.

**(c) Screened aggregate –** Furnish hard, durable particles or fragments of stone, slag, or gravel conforming the following:

| | |
|---|---|
| **(1)** Gradation | Table 703-16 |
| **(2)** Plastic Index, AASHTO T 90 | Less than 9 |
| **(3)** Los Angeles abrasion, AASHTO T 96 | 55% max. |
| **(4)** Free from organic matter and lumps or balls of clay. | |

Do not use material that breaks up when alternately frozen and thawed or wetted and dried.

Obtain the aggregate gradation by crushing, screening, and blending processes as necessary.

**Delete Table 703-2 and replace with the following:**

**Table 703-2**
**Target Value Ranges for Subbase and Base Gradation**

| Sieve Size | Percent by Mass Passing Designated Sieve (AASHTO T 27 and T 11) | | | | |
|---|---|---|---|---|---|
| | Grading Designation | | | | |
| | A (Subbase) | B (Subbase) | C (Base) | D (Base) | E (Base) |
| 2½ inch | 100 | | | | |
| 2 inch | 97 – 100 | 100 | 100 | | |
| 1½ inch | | 97 – 100 | | | |
| 1 inch | 65 – 79 (6) | | 80 – 100 (6) | 100 | |
| 3/4 inch | | | 64 – 94 (6) | 86 – 100 (6) | 100 |
| 1/2 inch | 45 – 59 (7) | | | | |
| 3/8 inch | | | 40 – 69 (6) | 51 – 82 (6) | 62 – 90 (6) |
| No. 4 | 28 – 42 (6) | 40 – 60 (8) | 31 – 54 (6) | 36 – 64 (6) | 36 – 74 (6) |
| No. 40 | 9 – 17 (4) | | | 12 – 26 (4) | 12 – 26 (4) |
| No. 200 | 4.0 – 8.0 (3) | 4.0 – 12.0 (4) | 4.0 –7.0 (3) | 4.0 – 7.0 (3) | 4.0 – 7.0 (3) |

( ) The value in the parentheses is the allowable deviation (±) from the target values..

**Delete Table 703-3 and replace with the following:**

**Table 703-3**
**Target Value Ranges for Surface Gradation**

| Sieve Size | Percent by Mass Passing Designated Sieve (AASHTO T 27 and T 11) | | | | | |
|---|---|---|---|---|---|---|
| | Grading Designation | | | | | |
| | F | G | H | S | T | U |
| 1 1/2 inch | 100 | | | 100 | | |
| 1 inch | 97-100 | 100 | | 72 – 92 (6) | 100 | |
| 3/4 inch | 76-89 (6) | 97 - 100 | 97 - 100 | | | 100 |
| 1/2 inch | | | | | 71 – 91 (6) | |
| 3/8 inch | 56-68 (6) | 70 – 80 (6) | 80 – 92 (6) | 51 – 71 (6) | | 71 – 90 (6) |
| No. 4 | 43-53 (7) | 51 – 63 (7) | 58 – 70 (7) | 36 – 53 (7) | 43 – 60 (7) | 50 – 68 (7) |
| No. 8 | | | | 26 – 40 (6) | 30 – 46 (6) | 34 – 51 (6) |
| No. 16 | 23-32 (6) | 28 – 39 (6) | 28 – 40 (6) | | | |
| No. 40 | 15-23 (5) | 19 – 27 (5) | 16 – 26 (5) | 14 – 25 (5) | 16 – 28 (5) | 19 – 30 (5) |
| No. 200 | 10.0-16.0 (4) | 10.0 – 16.0 (4) | 9.0 – 14.0 (4) | 8.0 – 15.0 (4) | 8.0 – 15.0 (4) | 8.0 – 15.0 (4) |

( ) The value in the parentheses is the allowable deviation (±) from the target values.
If the plasticity index (PI) is greater than 0, the TV range for the No. 200 sieve size is 8-12 (4).

## Add Table 703-16:

**Table 703-16**

**Gradation Requirements for Screened Aggregate**

| Sieve Size | Percent by Mass Passing Designated Sieve (AASHTO T 27 and T 11) | | | | | | |
|---|---|---|---|---|---|---|---|
| | Grading Designation | | | | | | |
| | **L** | **M** | **N** | **O** | **P** | **Q** | **R** |
| 6 inch | 100 | 100 | | | | | |
| 4 inch | | | 100 | 100 | | | |
| 3 inch | | | | | 100 | 100 | |
| 2 inch | | | | | | | 100 |
| No. 4 | | 15-45 | | 15-45 | | 15-45 | |

# 713 - Roadside Improvement Material

713.05_nat_us_03_02_2005

## 713.05 Mulch.

Add the following:

Assure that mulch used on the project is certified noxious weed free by the appropriate authority in the jurisdiction of use.

# 718 - Traffic Signing and Marking Material

718.05_nat_us_08_05_2009

## 718.05 Aluminum Panels

Delete the third paragraph and replace with the following:

Clean, degrease and properly prepare the panels according to methods recommended by the sheeting manufacturer. Conversion coatings will conform to ASTM B-921 or ASTM B-449.

**PART I – SCHEDULE OF ITEMS**
**SECTION B – SERVICES AND PRICES**



Grouse Timber Sale, Road 2258050
Olympic National Forest
Pacific Ranger District
Grays Harbor County, Washington

**Rd. 2258050 MP 0.0 – 0.36**

| ITEM NO. | DESCRIPTION | UNIT | QUAN-TITY | UNIT PRICE | TOTAL |
|---|---|---|---|---|---|
| | | | | | |
| 15101 | Mobilization | LS | 1 | $ 3,000.00 | $ 3,000.00 |
| | | | | | |
| 15713 | Soil Erosion and Pollution Control | LS | 1 | $ 376.00 | $ 376.00 |
| | | | | | |
| 20105 | Clearing & Grubbing, disposal of tops & limbs F, logs F, stumps F | LS | 1 | $ 4,350.00 | $ 4,350.00 |
| | | | | | |
| 30322 | Road reconditioning, Compaction Method C | Mile | 0.36 | $ 2,805.56 | $ 1,010.00 |
| | | | | | |
| 32222 | Pit run, maximum size 3”, compaction method A | Cubic Yard | 45 | $ 21.00 | $ 945.00 |
| | | | | | |
| 62530 | Seeding and Mulching, Dry Method | LS | 1 | $ 530.00 | $ 530.00 |
| | | | | | |
| 65201 | Pits and Quarry Development | LS | 1 | $ 920.00 | $ 920.00 |
| | | | | | |
| | Road 2258050 | | | Total | $ 11,131.00 |

*USDA-Forest Service Region 6*

*Olympic National Forest*

*RECONSTRUCTION PLANS FOR:*

# *THE END TIMBER SALE*

| Road List | | | |
|---|---|---|---|
| Road No. | M.P. | Type of work | Units |
| 2258050 | 0.00 - 0.36 | Road Reconstruction | US Customary |

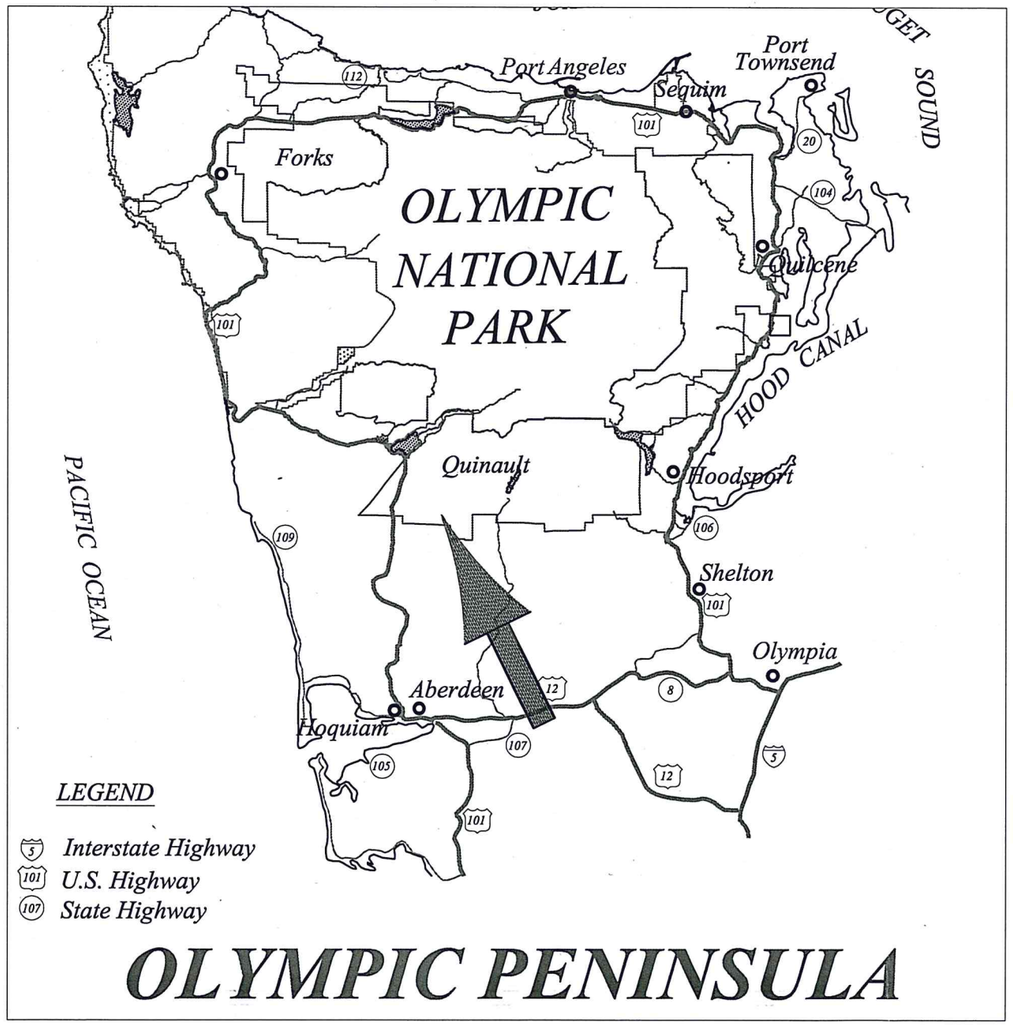


*INDEX TO SHEETS*



| SHEET NO. | SHEET TITLE |
|---|---|
| 1 Of 6 | Title Sheet |
| 2 Of 6 | Vicinity Map & Traffic Control Plan |
| 3 Of 6 | Estimate of Quantities |
| 4 Of 6 | General Notes & Temporary Erosion Control Details |
| 5 Of 6 | Road Reconstruction Details |
| 6 Of 6 | FSR 2258050 Work List |



| DESIGNED BY: | | |
|---|---|---|
| | EIT | 04/16/14 |
| NAME | TITLE | DATE |
| RECOMMENDED BY: | CIVIL ENG. TECH. | 4-16-14 |
| NAME | TITLE | DATE |
| APPROVED FOR TECHNICAL ADEQUACY: | | 4-16-14 |
| NAME | TITLE | DATE |
| APPROVED BY: | District Ranger | 4/22/14 |
| NAME | TITLE | DATE |

Refer To The STANDARD SPECIFICATIONS FOR CONSTRUCTION OF ROADS AND BRIDGES ON FEDERAL HIGHWAY PROJECTS / FP - 03 US Customary Units and The MUTCD

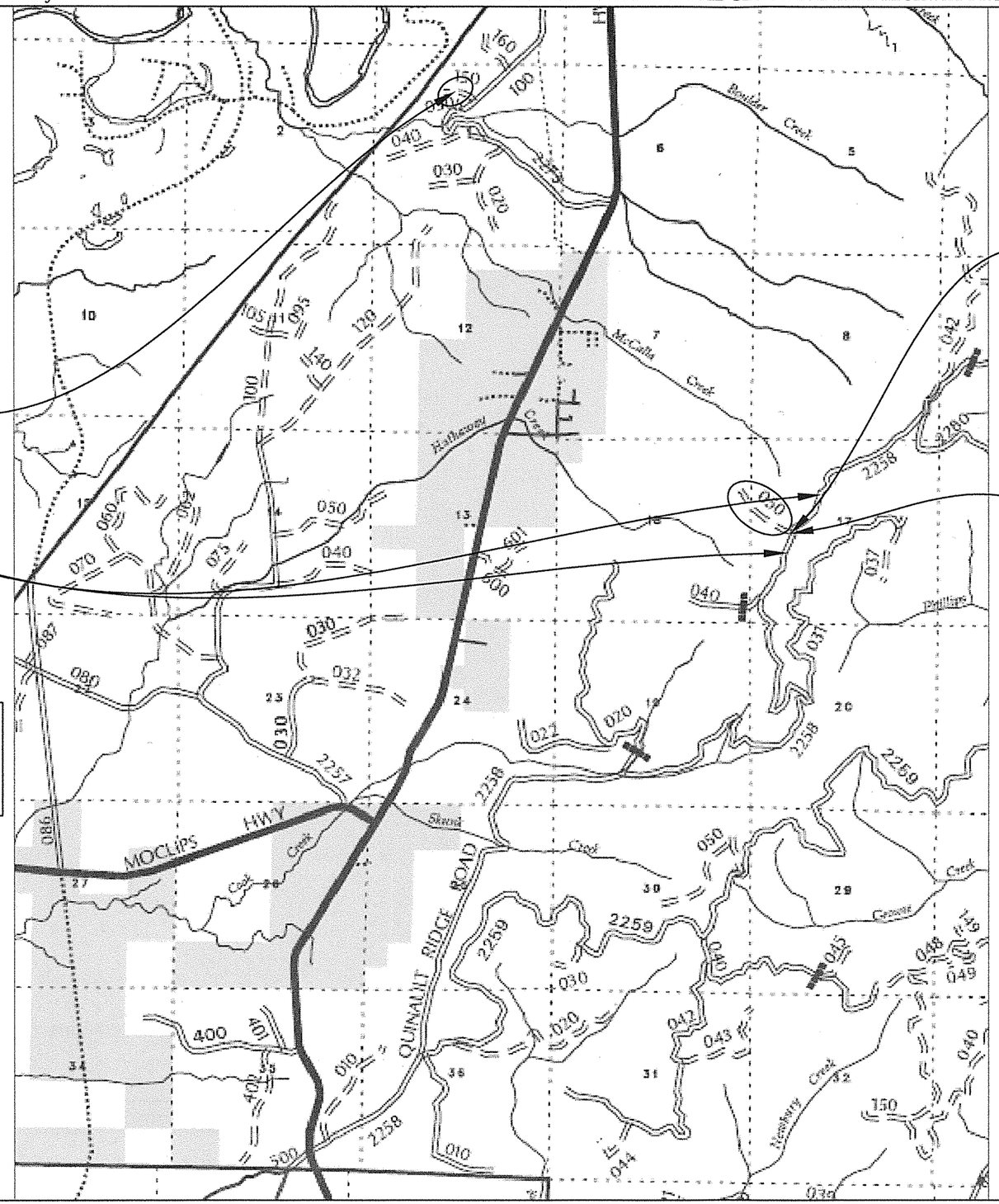


ROAD CLOSED

R11-2-48

NOTE:
Signs, locations, and installation details per MUTCD (2009 Edition)

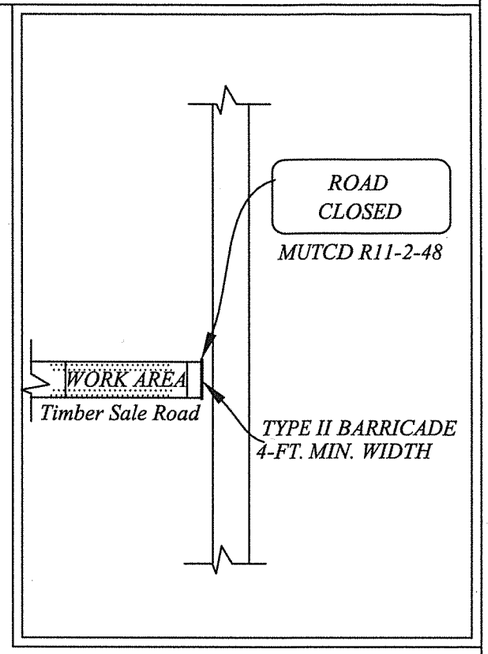


TRUCK CROSSING

W8-6-30

NOTE:
Signs, locations, and installation details per MUTCD (2009 Edition)

TRAFFIC CONTROL PLAN FOR ROAD CLOSURE

1) Notify CO 10 days before road closure under Supplemental Specification 156.05. Operations at all other times will accommodate traffic.

2) Traffic control devices shall be maintained for duration of closure.

3) All signs shall conform with MUTCD Sections 2A-11, through 2A-16, 6B-1, and 6B-2 of the 2009 Edition.

4) Post and maintain R11-2-48 sign on road 2258050 & at the beginning of the project.

5) Post and maintain W8-6-30 on FSR 2258, 500' on either side of the FSR 2258050 reconstruction for the duration of the construction.

| Unit / Region : | National Forest : | District : | Project Name : | Sheet Name : | Sheet Number : |
|---|---|---|---|---|---|
| USDA - Forest Service - R6 | Olympic | Pacific | The End Timber Sale Road Reconstruction FSR 2258050 | Vicinity Map & Traffic Control Plan | 2 Of 6 |

## ESTIMATE of QUANTITIES

| | | | | |
|---|---|---|---|---|
| Project Name: The End Timber Sale. FSR 2258050 | | | 2258050 | |
| | | MP-BOP | 0.00 | |
| | | MP-EOP | 0.36 | |
| ITEM NO. | DESCRIPTION | PAY UNIT | QUANTITIES | REMARKS |
| 15101 | Mobilization | Lump Sum | 1 | Includes all work needed to access sites. Cleaning of all equipment is required prior to entering National Forest Land. |
| 15713 | Soil Erosion & Pollution Control | Lump Sum | 1 | Maintenance for erosion control devices is an indirect cost to this pay item. |
| 20105 | Clearing & Grubbing, Disposal of Tops & Limbs F, Logs F, Stumps F | Lump Sum | 1 | |
| 30322 | Road Reconditioning, Compaction Method C | Mile | 0.36 | Opening road, removing road closure are an indirect cost to this pay item. Compaction required as specified in subsection 204.11. Ditchout is an indirect cost to this pay item. |
| 32222 | Pit Run Maximum size 3", Compaction Method A | Cubic Yard | 45 | Source, FSR 2258050 Sta. 12+00. Grading and shaping are indirect costs to this pay item. Equipment compaction as specified in subsection 322.05. Sorting/Screening maybe required to obtain specified material. |
| 62530 | Seeding & Mulching, Dry Method | Lump Sum | 1 | Seed will be government furnished @ 15 lbs/Ac. Notify F.S. 7 days prior to use. Mulch shall be certified weed free. |
| 65102 | Pits & Quarry Development | Lump Sum | 1 | This pay item is for development at FSR 2258050 Sta. 12+00 only. |

## GENERAL NOTES:

1) Should weather conditions during project operations generate and transport substantial sediment to the stream channel, cease operations until the weather conditions improve.

2) An erosion control plan shall be submitted by the Purchaser per Specification 15713. The erosion control plan shall include all necessary drawings and documentation to describe the Purchaser's ability to prevent sediment from reaching a live stream.

3) Item 62530, seed shall be applied prior to straw mulch. Seed will be furnished by the government and applied at a rate of 15 lbs/Acre. Mulching must also be certified weed free straw or mulch. Mulch at the rate of 4000 Ibs per acre. Seed and mulch in accordance with Specification 625 all areas disturbed by construction activities.

4) Utilize rock found on site during excavation if it meets specification.

5) Excavated areas and disposal sites shall be sloped to drain, seeded and mulched.

6) Have a hazardous spill clean-up kit on site available during equipment operation.

7) Merchantable timber removed during roadway cleaning operations shall be decked adjacent to roadway, decking areas shall be located by the CO. Utilizations standards are: all Douglas Fir, Hemlock, other coniferous species and Red Alder that are 12 feet long and a minimum 6 inch diameter inside the bark at the small end.

8) Clearing and Brushing - see specifications and supplemental specifications in section 201 for requirements.

## TEMPORARY EROSION CONTROL

DETAILS

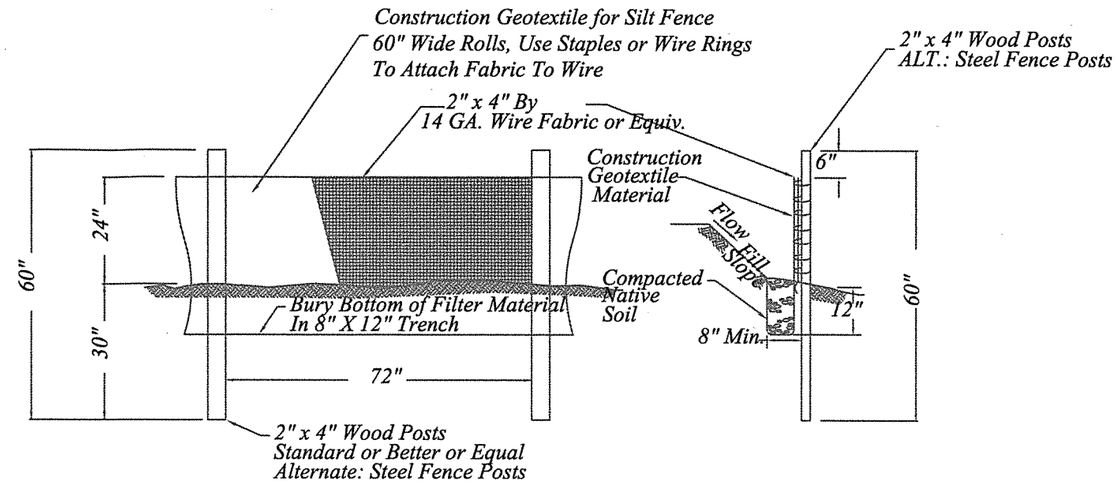


SILT FENCE STAKING DETAIL
NOT TO SCALE

NOTE:

1) Silt fence shall be installed at the locations where necessary to prevent silt runoff.

2) Minor grading may be utilized in lieu of silt fences at some locations to prevent silt runoff from leaving the project site. Work shall be an indirect cost to other items.

3) Silt fence joints shall be minimized. When neccessary, silt fence shall be spliced together only at a support post, with a minimum of 24" overlap.

4) Repair of damaged silt fence and removal of silts against fence shall be an indirect cost to soil erosion and pollution control.

5) Silt fence shall be installed concurrently with clearing and grubbing.

6) Work shall be done under dry conditions. A contingency plan will be submitted prior to beginning construction activities, along with an erosion control plan.

7) Contractor shall protect existing vegetation and shall confine excavation to within the clearing limits.

MATERIALS:

1) Construction geotextile for silt fence shall be Type V - C

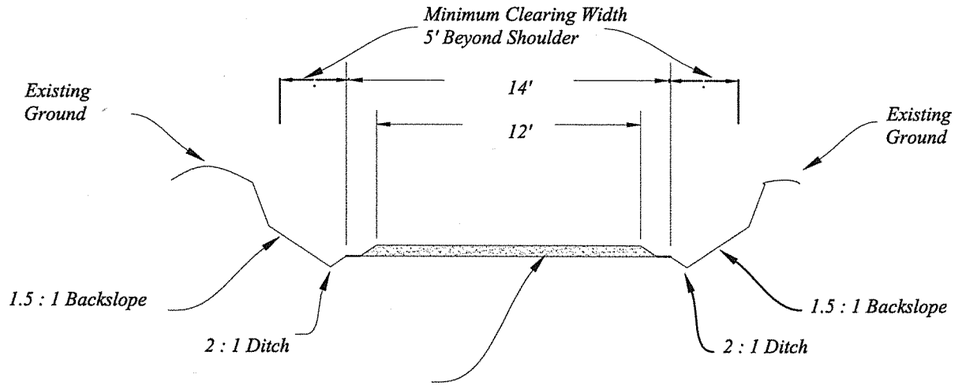


*Note: Minimum 2% if road crowning, inslope, or outslope is required.*

*Pay Item 30322, Roadbed Reconditioning.*
- *Repair soft and unstable areas to existing grade*
- *Equipment compaction required, See Subsection 204.11*

## TYPICAL GRADING DETAIL - SINGLE LANE

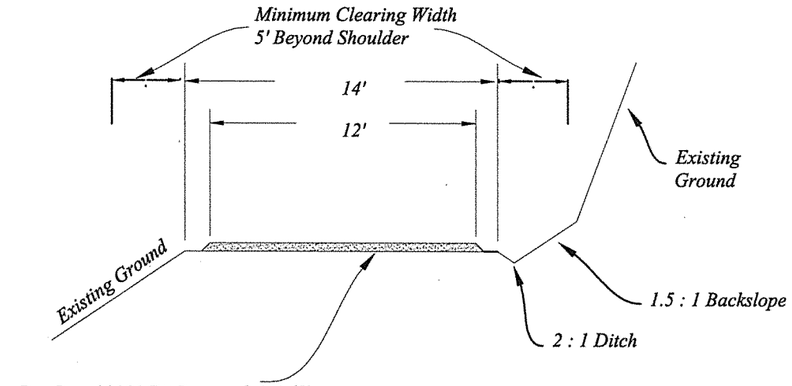


*Note: Minimum 2% if road crowning, inslope, or outslope is required.*
*Outsloped sections may/maynot require ditch construction, see worklist for requirement.*

*Pay Item 30322, Roadbed Reconditioning.*
- *Repair soft and unstable areas to existing grade*
- *Equipment compaction required, See Subsection 204.11*

## TYPICAL GRADING DETAIL - SINGLE LANE

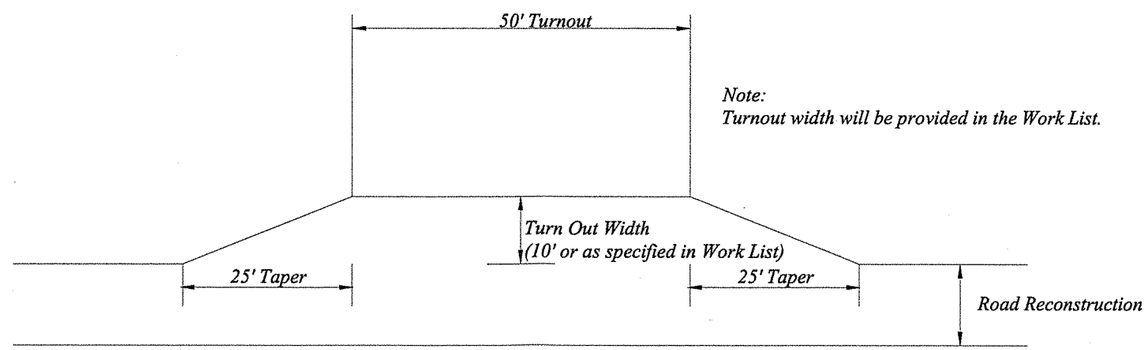


## ROAD TURN OUT DETAIL

| Unit / Region : | National Forest : | District : | Project Name : | Sheet Name : | Sheet Number : |
|---|---|---|---|---|---|
| USDA - Forest Service - R6 | Olympic | Pacific | The End Timber Sale Road Reconstruction FSR 2258050 | Road Reconstruction Details | 5 Of 6 |

| STATION | REQUIREMENT | Rock Quan. (C.Y.) | CULVERT INSTALLATION / IMPROVEMENTS | |
|---|---|---|---|---|
| | | Pit Run | Culvert Size | Riprap In/Out (C.Y.) |
| | Project Begins at approximately FSR 2258 M.P. 6.1 | | | |
| 0+00 | BOP, Begin reconstruction of FSR 2258050.<br>Begin brushing and clearing, grading and shaping, road reconditioning. 14' Subgrade, Compaction Method B (204.11).<br>Begin outsloping roadway. All rock placement, Compaction Method B (322.05 - refers to 204.11) | | | |
| 0+70 | Remove road closure berm | | | |
| 3+20 | Spot Rock | 10 | | |
| 10+00 - 11+00 | Construct 10' X 50' turnout left, w/25' tapers | 10 | | |
| 11+00 | End outslope, begin inslope | | | |
| 12+00 | Designated material source | | | |
| 12+80 | End inslope, begin outslope<br>Construct ditch out left to day light | | | |
| 14+70 - 15+20 | Place 4" lift of pit run rock | 10 | | |
| 15+37 - 15+67 | Retain rootwads, restore road prism to design width, compaction required | 15 | | |
| 16+00 - 16+30 | Remove berm on the right side of the road | | | |
| 16+30 | End outslope, begin crown | | | |
| 18+00 | Existing Landing, clear 50' W X 100' L landing, compact surface | | | |
| 19+00 | EOP, End reconstruction of FSR 2258050<br>End clearing and brushing, grading and shaping, and reconditioning.<br>Disposal of material shall be placed within the reconstruction area.<br>Location will be designated after the sale so disposal can't interfere with logging activities. | | | |