United States Department of Agriculture | **Forest Service** | **Chequamegon/Nicolet Medford/Park Falls Ranger District** | **1170 4th Avenue S. Park Falls , Wisconsin 54552**

Reply to: 2430
Date: May 21, 2015

Dear Prospective Bidder:

On 06/23/2015, at 11:00 AM, sealed bids will be opened in the Medford-Park Falls Ranger District, 1170 4th Ave. S., Park Falls, WI 54552 for the Foulds Springs Integrated Resource Timber (Stewardship) contract. This project is located in Price County, WI, T38N, R3E, Sections 2, 3, 4 and T39N, R3E, Sections 33, 34, 35. Integrated Resource Timber Contract 2400-13T will be used. The termination date for this contract is June 30, 2019.

The estimated quantities in the contract have been determined prior to felling. Forest Service encourages potential bidders to make their own inspection and estimate prior to bid submission. The Forest Service makes no representation, warranty, or guarantee of the accuracy of the following estimates:

Estimated Quantities and Rates per Unit of Measure						**Required Deposits**	
Species	**Product**	**Unit of Measure**	**Estimated Quantities**	**Advertised Rates**	**Base Rates**	**Slash Disposal**	**Road Maintenance**
Ash	Sawtimber	CCF	770.00	$79.09	$1.00	$0.00	$1.34/CCF
Basswood	Sawtimber	CCF	98.00	$72.90	$1.00	$0.00	$1.34/CCF
Softwood – Other	Sawtimber	CCF	152.00	$68.44	$1.00	$0.00	$1.34/CCF
Hardwood – Other	Sawtimber	CCF	18.00	$87.34	$1.00	$0.00	$1.34/CCF
Aspen	Pulpwood	CCF	524.00	$36.25	$1.00	$0.00	$1.34/CCF
Softwood – Other	Pulpwood	CCF	307.00	$37.16	$1.00	$0.00	$1.34/CCF
Hardwood – Other	Pulpwood	CCF	4,324.00	$28.88	$1.00	$0.00	$1.34/CCF
	Total	CCF	6,193.00			$0.00	$8,298.62

Mandatory Stewardship Service Items			
Project Number	Work Activity Description	Units of Measure	Estimated Quantity
1	Canopy gap site prep	Acres	410

There is no bid guarantee or downpayment required on this sale. A Performance Bond will be required prior to award. If you wish further information on this project, the prospectus, or a bid form, please call Russ Newman at 715-762-5716.

Sincerely,

BOB HENNES
District Ranger

Enclosure

INTEGRATED RESOURCE TIMBER CONTRACT PROSPECTUS

Stewardship Contract Name :	Foulds Springs Stewardship	**Type of Contract :**	Premeasured
National Forest :	Chequamegon/Nicolet	**Ranger District :**	Medford/Park Falls
Bidding Method :	Sealed Bid		
Location to Receive Offers :	Medford-Park Falls Ranger District, 1170 4th Ave. S., Park Falls, WI 54552		
Date : 06/23/2015	**Time :** 11:00 AM		

1. INTRODUCTION. This prospectus furnishes prospective offerors with information not contained in the published advertisement and is designed to enable offerors to decide whether or not to further investigate this stewardship project. The prospectus is not a legally binding document, but is offered to provide general information about a Stewardship Contract. The prospectus does not include descriptions, estimates, and other data that are contained in the sample contract, unless otherwise stated. In the event that the prospectus contains an error or contradicts the sample contract, the contract governs. Offerors are urged to examine the contract and make their own estimates. Contract 2400-13T will be used. Inspect the contract area and the sample contract before submitting an offer. Obtain the appraisal, other information on the contract and stewardship work items and conditions of offering at Forest Service offices listed above and in the advertisement.

This is a Stewardship End Results Contract authorized by 16 U.S.C. 2104 Note.

2. OFFERING. This is a Sealed Bid Stewardship Contract . Offerors must submit sealed offers on prepared forms they can obtain from Forest Service offices listed above and in the advertisement. The forms include instructions for offering and submission of the required certifications and technical proposals. The term "offer form" in this prospectus is the Bid for Integrated Resource Contract form. Also, the term "offeror" in this prospectus is identified as "offeror" in the Bid for Integrated Resource Contract form. **THE OFFERS WILL NOT BE PUBLICLY OPENED.**

The offeror is required to submit a technical and price proposal and comply with all other provisions stated on the offer form. The proposal should be practical and be prepared simply and economically, providing a straightforward, concise description of the Contractor's ability to meet the requirements of the contract. Upon contract award, this technical proposal will become a binding part of the contract. See Section 21, General for instructions for preparation of technical proposals and evaluation factors for award.

3. LOCATION AND DESCRIPTION OF INTEGRATED RESOURCE TIMBER. Refer to the sample contract and contract area map attached to the sample contract for legal location of contract area, location of payment units, location of cutting units, the acreage of contract area, the cutting unit acreage and location of stewardship work activities.

THE FOLLOWING GENERAL LOCATION, ROUTES OF ACCESS, ACREAGES, AND OTHER SPECIAL LOCATION DATA DO NOT SUPERSEDE THE CONTRACT AREA MAP OR SAMPLE CONTRACT.

Sale is located approximately 25 miles southeast of Park Falls, WI, or 20 miles northeast of Phillips, WI on the west side of Forest Road 132 (Sheep Rand Rd.). A few units are accessed via new specified road construction, while most others are accessed via existing roads requiring some maintenance work.

Total Sale Area is estimated at 932 acres, with cutting area estimated at 460 acres.
Payment Units 01, 02,, 02A, 03 & 04 are approximately 410 acres of hardwood selection.
Payment Units 05, 06, & 08 are approximately 50 acres of spruce salvage regeneration harvests..
Payment Unit 09 is the Specified Road Clearing unit.

"Softwood-Other" Sawtimber consists mostly of white spruce.
"Softwood-Other" Pulpwood consists mostly of white spruce, with lesser amounts of balsam fir.
"Hardwood-Other" Sawtimber consists mostly of sugar maple, with lesser amounts of oak, paper birch, and red maple.
"Hardwood-Other" Pulpwood consists mostly of sugar maple and ash, with lesser amounts of red maple, basswood, paper birch, and oak.

Refer to Section 20 of this prospectus for further information regarding the contract specifications

4. QUANTITIES AND RATES. The quality, size, cut per acre, and product suitability of the timber are estimates based on detailed

cruise information on file and available for inspection at the Forest Service offices listed above and in the advertisement. VOLUME QUANTITIES LISTED HEREIN ARE MADE AVAILABLE WITH THE UNDERSTANDING THAT VALUES SHOWN ARE FOREST SERVICE ESTIMATES AND ARE NOT GUARANTEED. For these reasons, offerors are urged to examine the contract area and make their own estimates.

Road Construction Costs. The estimated road construction cost has been included in the appraisal as a cost that the Contractor will incur. The Contractor will be responsible for the road construction cost and WILL NOT receive credit towards stumpage costs for this expense, i.e., THIS CONTRACT DOES NOT INCLUDE STEWARDSHIP CREDIT for the construction of specified roads and Contractors should consider the cost of specified road construction when developing their offers.

THE MINIMUM ACCEPTABLE BID RATE FOR THE MANDATORY TIMBER CUTTING UNITS IS STATED IN THE ATTACHED OFFER FORM. THESE RATES ARE EFFECTIVE AT THE TIME OF ADVERTISEMENT.

Mandatory Estimated Quantities and Rates per Unit of Measure

				Rates Per Unit of Measure			
Species	**Product**	**Unit of Measure**	**Estimated Quantities**	**Base Rate**	**Advertised Rate**	**Additional Deposits for Slash Disposal**	**Road Maintenance**
Mandatory Timber Cutting Units :							
Ash	Sawtimber	CCF	770.00	$1.00	$79.09	$0.00	$1.34
Basswood	Sawtimber	CCF	98.00	$1.00	$72.90	$0.00	$1.34
Softwood - Other	Sawtimber	CCF	152.00	$1.00	$68.44	$0.00	$1.34
Hardwood - Other	Sawtimber	CCF	18.00	$1.00	$87.34	$0.00	$1.34
Aspen	Pulpwood	CCF	524.00	$1.00	$36.25	$0.00	$1.34
Softwood - Other	Pulpwood	CCF	307.00	$1.00	$37.16	$0.00	$1.34
Hardwood - Other	Pulpwood	CCF	4,324.00	$1.00	$28.55	$0.00	$1.34
	TOTAL	CCF	6,193.00			$0.00	$8,298.62

Optional Estimated Quantities and Rates per Unit of Measure

				Rates Per Unit of Measure			
Species	**Product**	**Unit of Measure**	**Estimated Quantities**	**Base Rate**	**Advertised Rate**	**Additional Deposits for Slash Disposal**	**Road Maintenance**

Not Applicable

Timber Subject to Agreement

Species	**Product**	**Unit of Measure**	**Fixed Rates**	**Slash Disposal Deposits**	**Road Maintenance Deposits**
Combined Conifer	Grn Bio Cv	CCF	$1.50	$0.00	$1.34
Combined Hardwood	Grn Bio Cv	CCF	$1.50	$0.00	$1.34

Estimated Knutson-Vandenberg deposit for contract area improvement work in a total amount of $17,466.00 is included in total value.

All of the mandatory stewardship work items, as shown in A.4.3 or AT.4.4 of the sample contract, shall be performed. Optional stewardship work items, as shown in A.4.3 or AT.4.4 of the sample contract, shall be performed when authorized in writing by Contracting Officer. Such authorization may be for all or a portion of the quantity shown. Optional stewardship work items may be selected and authorized in any order. Upon written request of Contractor, additional stewardship work items shall be considered and authorized; however, Contracting Officer shall not be obligated to authorize additional stewardship work items if three or more authorized optional stewardship work items or any of the mandatory stewardship work items remain uncompleted. Contracting Officer shall not be obligated to authorize additional

stewardship work items at any time if Contracting Officer determines that there is insufficient value of remaining designated timber to cover the value of additional stewardship work items.

Stewardship Schedule of Work Items

Item Number (a)	Work Activity Description (b)	Unit of Measure (c)	Estimated Quantity (d)
Mandatory Stewardship Work Items			
1	Canopy gap site prep	Acres	410.00

5. PERIOD OF CONTRACT. The normal operating season covers the period between 12/01 and 03/15.
Contract termination date is 06/30/2019. Extensions of this contract may be granted only when the contractor has met specified conditions.
Upon acceptance by the Forest Service, the technical proposal is a binding part of the contract and shall include, but is not limited to, plan periods for and methods of work activities. The Contractor must also submit an annual schedule of operations before commencing operations. This schedule will include the anticipated major activities and needs for harvest. This annual schedule of operations does not require concurrence of the Forest Service.

6. PAYMENT. Payment for timber and any required deposits for slash disposal or road maintenance are required in advance of cutting. Contractor may earn stewardship credits or provide an acceptable payment guarantee prior to cutting. "Stewardship Credits" are credits that are earned and established when work described in K(T)-G(T).9# of the sample contract has been performed and accepted. Stewardship Credits shall be earned at the offer rate as shown in the awarded contract. Earned Stewardship Credits may be used to pay for Included Timber value in excess of Base Rates and Required Deposits. Base Rates and Required Deposits must be paid in cash.

7. PERFORMANCE BOND. A performance bond is required. The penal sum of the bond will be 10 percent of the total offer value for included timber, rounded up to the nearest $100 when the total offer value is $10,000 or less; and rounded up to the nearest $1000 when the total offer value exceeds $10,000; or $23400, whichever is greater.

8. SPECIFIED ROADS. The Forest Service has determined that the following National Forest System roads shall be constructed or paid for, in whole or in part, by the Contractor. Sufficient information to permit a prospective offeror to calculate the likely cost to be incurred for road construction is available at the Forest Supervisor's Office. See the sample contract for verification of specific details and information concerning construction specifications. CONSTRUCTION ESTIMATES AND INFORMATION CONTAINED HEREIN, TOGETHER WITH RELATED SPECIFICATIONS, ARE NOT GUARANTEED. The following roads are those that Forest Service considers necessary to remove the timber from this contract.

Road Number	Road Name	Traffic Service Level	Approximate Miles/Kilometers	Estimated Road Construction Cost	Type of Work *
132W	Forest Road 132W	D	0.04 / 0.06	$975.50	C
430A	Forest Road 430A	D	0.13 / 0.21	$2,855.10	C
430C	Forest Road 430C	D	0.4 / 0.64	$7,515.30	C

* C = Construction
R = Reconstruction

Total estimated road construction cost allowed in appraisal is $11,345.90

9. ROAD MAINTENANCE. Contractor shall perform or pay for road maintenance work, commensurate with Contractor's use, on roads controlled by Forest Service, and used by Contractor in connection with this contract. Road maintenance requirements are based

on the predicted haul route. Any change in the Contractor's actual haul route may necessitate a change in the roads to be maintained and/or in the amount of required deposit for road maintenance. Required deposits for road maintenance are listed in provision K(T)-F(T).3.2# in the sample contract. Maintenance specifications are in the sample contract.

10. INAPPLICABLE STANDARD PROVISIONS. See sample contract.

11. SPECIAL PROVISIONS. See sample contract.

12. SET-ASIDE CONTRACTS. Not Applicable.

13. LOG EXPORT AND SUBSTITUTION RESTRICTIONS. Not Applicable.

14. EQUAL EMPLOYMENT OPPORTUNITY COMPLIANCE REVIEW. If the total contract value for this contract exceeds $10 million, before award, the Forest Service shall request an equal employment opportunity compliance review of the Contractor to determine compliance with the provisions of Executive Order 11246 of September 24, 1965, as amended by Executive Order 11375 of October 13, 1967 and Executive Order No. 12086 of October 5, 1978.

15. AWARD. The Contracting Officer is required to make a determination of Contractor responsibility as stated in Title 36, Section 223.101, of the Code of Federal Regulations.
To determine a Contractor to be responsible, a Contracting Officer must find that:

a. The Contractor has adequate financial resources to perform the contract or the ability to obtain them;

b. The Contractor is able to perform the contract within the contract term taking into consideration all existing contracts and Governmental business commitments;

c. The Contractor has a satisfactory performance record on similar type contracts. A prospective Contractor that is or recently has been seriously deficient in contract performance shall be presumed not to be responsible, unless the Contracting Officer determines that the circumstances were beyond the Contractor's control and were not created through improper actions by the Contractor or affiliate, or that the Contractor has taken appropriate corrective action. Past failure to apply sufficient tenacity and perseverance to perform acceptably under a contract is strong evidence that a Contractor is not responsible. The Contracting Officer shall consider the number of contracts involved and extent of deficiency of each in making this evaluation;

d. The Contractor has a satisfactory record of integrity and business ethics;

e. The Contractor has or is able to obtain equipment and supplies suitable for completing the requirements of the contract;

f. The Contractor is otherwise qualified and eligible to receive an award under applicable laws and regulations.

Offerors, by signing the offer form, certify that, to the best of offeror's knowledge, the offeror will meet the requirements in 36 CFR 223.101, determination of Contractor responsibility, and if awarded this contract, that offeror will complete the contract and any modifications thereof in accordance with its terms including requirements to purchase, cut, and remove included timber or forest products and complete stewardship projects by the termination date.

16. FALSE STATEMENTS ACT. Offerors, by signing the offer form, certify that they are aware that offeror is subject to the penalties prescribed in 18 U.S.C. 1001, Chapter 47, Fraud and False Statements (P.L. 104-45). The Act states "whoever, in any matter within the jurisdiction of any department or agency of the United States knowingly and willfully falsifies, conceals or covers up by any trick, scheme, or device a material fact, or makes any false, fictitious or fraudulent statements or representations, or makes or uses any false writing or document knowing the same to contain any false, fictitious or fraudulent statement or entry, shall be fined under this title or imprisoned not more than 5 years, or both."

17. DAMAGES. This contract shall be terminated for breach if: 1) Contractor fails to execute this stewardship contract or furnish a satisfactory performance bond by the date required in the award letter, if required; or 2) offeror is found to have violated the False Statements Act in making any statement or certification on the offer form including not meeting responsibility requirements, and offeror has made a false statement.

18. SUSPENSION AND DEBARMENT CERTIFICATION. Non-procurement debarments and suspensions are governed by the Government-wide common rules (7 CFR 3017).
These rules require each contractor, to submit a certification for itself, its principals, and its affiliates when submitting an offer on stewardship contracts. The offeror must designate its status regarding debarment, suspension, and other matters as specified on the offer form. The offeror, by signing the offer, certifies this status. An explanation for not submitting a certification may be submitted. The Contracting Officer will determine whether the explanation provides sufficient reason for permitting participation in the competition. Also, as a Contractor enters into transactions with subcontractors, these subcontractors must certify their eligibility. The certification titled "Subcontractor Certification Regarding Debarment, Suspension, Ineligibility, and Voluntary Exclusion" must be provided to subcontractors, but completed certifications are not required to be submitted with the offer. Contractor must keep these subcontractor certification forms on file for review by the Forest Service, if requested.
The certification forms and instructions for subcontractors transactions are provided as an addendum to the offer form.

19. OCCUPATIONAL SAFETY AND HEALTH ADMINISTRATION (OSHA) REGULATIONS. Conduct of operations on this contract is subject to compliance with all OSHA requirements related to the various work activities. Inspection by OSHA may include inspection for compliance with the logging operations regulations at 29 CFR 1910.266. This standard is applicable to the entire logging industry wherever logging operations occur. Information is available to assist Contractors to ensure compliance with the logging operations regulations during conduct of this contract from the U.S. Department of Labor, Occupational Safety and Health Administration, OSHA, 1648 Tri Park Way Appleton, WI 54914, 920-734-4521.

20. GENERAL. Corporations submitting an offer under this solicitation must include form AD-3030-FS, Representations Regarding Felony Conviction and Tax Delinquent Status For Corporate Applicants. Copies of this form may be obtained from the Forest Service office shown on page 1 of this prospectus or electronically at:
http://www.ocio.usda.gov/policy-directives-records-forms/forms-management/approved-computer-generated-forms.

AT.17 MARKET-RELATED CONTRACT TERM ADDITION PRODUCER PRICE INDEX
The Producer Price Index is the Wood Chips Index. This index was established to reflect expected marketing of a majority of the products on this sale. Purchaser may request, prior to contract execution, the use of a different available index (Softwood Lumber Index or Hardwood Lumber Index) through a written request justifying why the change is being requested. This request will be forwarded to, and considered by, the Forest Supervisor for approval. If agreed upon, the change will become part of the executed contract. The index may not be changed once the contract has been executed.

AT.2 QUANTITY ESTIMATE AND UTILIZATION STANDARDS
Volume estimates were made from timber cruising that occurred between February and September of 2014. Hardwood Sawtimber volume estimates are the result of two slightly different cruising specifications for Hardwood Sawtimber: Eight foot sections cruised as Hardwood Sawtimber products with a small end DIB (Diameter Inside Bark) between 9.6" and 11.5" had a net scale in percent of gross scale of at least 95% (i.e. were considered to be at least 95% sound), while eight foot sections cruised as Hardwood Sawtimber products with a small end DIB over 11.5" DIB had a net scale in percent of gross scale of at least 50%. Estimated sawtimber CCF volumes can be converted to estimated MBF volumes by multiplying by 0.54; estimated pulpwood CCF volumes can be converted to estimated MBF volumes by multiplying by 0.633.

AT.6 HIGH STUMPS
Maximum Stump Heights shall be no more the 12 inches, measured from the high side of the stump.

AT.7 SPECIFIED ROADS
The Forest Service has appraised local material source from the Sieverson Pit in T39N, R3E, Section 35. See attached specified road documents for further information.

AT.12 TERMINATION DATE
Termination Date is set for June 30, 2019.

AT.13 NORMAL OPERATING SEASON
Normal Operating Season is December 01 to March 15.

KT-CT.3.5.2# DESIGNATION BY SPECIES AND DIAMETER
KT-CT.3.5.5# INDIVIDUAL TREES, CUT TREE MARKING
See attached documents.

KT-FT.1.0.3# APPROACHES TO SURFACED ROADS
Contractor shall apply and maintain 6 inches of pit run gravel on all Temporary Road approaches to surfaced roads for a distance of 100 feet back fromthe surfaced road. This requirement may be waived by the Forest Service if Temporary Road is used only during frozen ground conditions.

KT-FT.1.2# USE OF ROADS BY CONTRACTOR
Use of Forest Road 430 west of the Payment Unit 02 boundary and use of Forest Road 516 are prohibited.

KT-FT.3.1# ROAD MAINTENANCE REQUIREMENTS
See attached documents.

KT-FT.3.2# ROAD MAINTENANCE DEPOSIT SCHEDULE
In addition to stumage charges, Contractor will be billed $1.34/CCF for payment in lieu of Contractor's road maintenance for roads expected to be used for hauling but not listed in KT-FT.3.1#

KT-GT.2.4# SITE SPECIFIC SPECIAL PROTECTION MEASURES
Sale Area Map shows units where cultural and/or botanical protection areas exist within or near cutting boundaries. Forest Service will identify exact locations requiring protection prior to the start of Contractor's operations.

KT-GT.3.1.3# CUTTING SCHEDULE
Only five Payment Units may be released for operations at one time.

KT-GT.3.1.4# OPERATING RESTRICTIONS
Contractor's use of paint within Sale Area must be requested in writing and approved by the Contracting Officer.

Contractor's operations that result in high levels of ground disturbance may require revegetation efforts on behalf of the Contractor to establish acceptable erosion control. Location and timing of revegetation will be directed by the Forest Service to establish an acceptable grass or legume cover. Grass or legume seed, as well as any lime or fertilizer used, will need to be approved by the Forest Service in advance of application.

Contractor's operations in Payment Unit 05, 06, and 08 are restricted to frozen ground conditions and/or when average compacted snow depth is at least 12 inches due to soil resource concerns. Operations in Payment Units 01, 02, 02A, 03, and 04 are restricted to frozen ground conditions and/or when average compacted snow depth is at least 12 inches due to other biological resource concerns. Evidence of rutting, compaction, or erosion will be determining factors for not permitting or halting operations. Operations occurring during non-frozen conditions will require that no equipment be operated within 15 feet of any woodland pond or wetland.

Hauling of timber on Forest Service roads, including temporary roads, during times when load restrictions are in place for county or local roads, requires Forest Service approval.

All material not meeting minimum specification, as stated in AT2, shall be left on site. In Payment Units 01, 02, 02A, 03, 04, and 09 if harvesting of material not meeting the minimum specifications in AT2 is requested by Purchaser and approved by Forest Service, only the main bole may be removed and no further than up to a one-inch diameter, and a minium of 1 tree top for every 10 trees harvested will be left on site. In Payment Units 05, 06, and 08 if harvesting of material not meeting the minimum specifications in AT2 is requested by Purchaser and approved by Forest Service, only the main bole may be removed and no further than up to a one-inch diameter, and a minium of 1 tree top for every 7 trees harvested will be left on site. All material must be processed at the stump.

KT-GT.4.2# SKIDDING AND YARDING REQUIREMENTS
Protect existing downed logs greater than 10 inches in diameter during felling and skidding operations, when possible.

Skid trails and decking locations should avoid areas known to be infested with non-native invasive plant species. Skid trails that access open system roads or trails shall be rendered inaccessible to vehicle traffic. This may require scattering of slash and stumps and/or placement of berms.

Skidding on Forest Trails is only allowed at crossing locations designated by the Forest Service. Decking is not allowed on or adjacent to Forest Trails that are not also open system roads.

Landings will not be located within the road template, including the ditch line and back slope, of Forest Road 132 unless written permission from the Town is received by the Forest Service.

KT-GT.6.3# TEMPORARY ROAD CLOSURES

Temporary Roads will be closed by creating a berm 4-5 feet high and scattering slash behind the berm for 100' to effectively prevent motorized access behind the berm.

KT-GT.7# SLASH DISPOSAL MEASURES
All slash resulting from Contractor's operations shall not lie outside of Payment Unit boundaries.

SDZ(1)
Slash resulting from Contractor's operations within 100 feet from the cleared right-of-way (i.e. tree line) of Forest Road 132 shall lie no more than 2 feet above ground.

SDZ(2)
Slash resulting from Contractor's operations within 100 feet from the cleared right-of-way (i.e. tree line) of Snowmobile Trail 120 and Forest Roads 125, 125B, 125C, 132V, 132W, 430, 430A, 430C & 519 shall lie no more than 3 feet above ground.

SDZ(3)
Slash resulting from Contractor's operations within 150 feet from the cleared right-of-way (i.e. tree line) of the Foulds Springs Trail shall lie no more than 2 feet above ground.

KT-GT.9# STEWARDSHIP PROJECTS
See attached document.

The successful offeror shall register in the Central Contractor Registration (CCR) at www.ccr.gov.

INSTRUCTIONS FOR THE PREPARATION OF TECHNICAL AND PRICE PROPOSALS

(a) General Instructions. Proposals submitted shall be furnished in the following format with the numbers of copies as specified below.

(1) - The proposal must include a technical proposal and price proposal. Each of the parts shall be separate and complete so that evaluation of one may be accomplished independently from evaluation of the other. The technical proposal must not contain reference to cost.

(2) - Offerors may, at their discretion, submit alternate proposals or proposals which deviate from the requirement; provided, that an offeror also submit a proposal for performance of the work as specified in the statement of work. Any "alternate" proposal may be considered if overall performance would be improved or not compromised, and if it is in the best interest of the Government. Alternate proposals, or deviations from any requirement of this Request for Proposal (RFP), must be clearly identified.

OR

(2) Offerors must submit a proposal that meets all requirements specified in the sample contract. No alternate proposals will be accepted.

(3) - The Government will evaluate proposals in accordance with the evaluation criteria set forth below.

(4) - Offerors shall submit their proposal(s) in the following format and the quantities specified:

(i.) One copy of the completed, signed offer form FS-2400-14BV or FS-2400-14BVU provided by the Forest Service for this contract.

(ii.) Three copies of the technical proposal.

(iii.) One copy of the business/cost proposal.

(b) Technical Proposal Instructions. Technical proposals will be evaluated to determine the ability of the Contractor to meet the requirements of the Government. As a minimum, the proposal must clearly provide the following: See the attached Technical Proposal Form for the Evaluation Factors and Subfactors.

EVALUATION, NEGOTIATION AND AWARD PROCESS

Proposals will be evaluated and rated to determine which offerors are within a competitive range, price and other factors considered. Award may be made without further negotiations. Proposals should be submitted initially on the most favorable terms that the offeror can submit to the Government, from both price and technical standpoints. However the Government may, after evaluation of proposals, conduct further oral

or written discussions as appropriate, with all offerors whose proposals are within a competitive range. Proposals that do not address one or more criteria or subfactors, may not be considered further for award.

Firms lacking a past performance record (e.g., new firms or those with no relevant experience within their organization) will be treated as an unknown performance risk, receiving a neutral score in this criteria. A neutral score will be established as the average of all other competing offerors, or the average of the total score available, whichever is less.

EVALUATION CRITERIA

The evaluation factors for this contract and their relative importance are listed below in descending order of priority. All subfactors within a factor are equal in weight.

Factor	Approximate Weight
A. Price	50%
B. Technical Approach	5%
1. Plan of Operations	
2. Quality Control	
3. Contract Manager and On-the-Ground Supervisor(s)	
4. Equipment	
5. Production Capability	
C. Capability and Past Performance	25%
1. Key Personnel	
2. Subcontractors	
3. Past Contacts	
D. Utilization of Local Workforce	20%
E. Other	0%

Award Statement. One award will be made to the offeror (a) whose proposal is technically acceptable and (b) whose technical/price relationship is the most advantageous to the Government. All technical evaluation factors (B-D), when combined, are approximately equal to price (A). The critical factor in making any technical/price trade-off is not the spread between the technical ratings, but rather the significance of that difference. The significance of the spread in ratings will be determined on the basis of what that difference might mean in terms of performance and what it would cost the Government to take advantage of it. Award may not necessarily be made for technical capabilities that would appear to exceed those needed for fulfilling the requirements of this contract. The Government reserves the right to make cost/technical trade-offs that are in the best interest and to the advantage of the Government.

Price proposals will not be scored.

POSTAWARD DEBRIEFING OF OFFERORS

(a) (1) An offeror, upon its written request received by the agency within 3 days after the date on which that offeror has received notification of contract award in shall be debriefed and furnished the basis for the selection decision and contract award.

(2) To the maximum extent practicable, the debriefing should occur within 5 days after receipt of the written request.

(3) An offeror that was notified of exclusion from the competition, but failed to submit a timely request, is not entitled to a debriefing.

(4) (i) Untimely debriefing requests may be accommodated.

(ii) Government accommodation of a request for delayed debriefing, or any untimely debriefing request, does not automatically extend the deadlines for filing protests. Debriefings delayed could affect the timeliness of any protest filed subsequent to the debriefing.

(b) Debriefings of successful and unsuccessful offerors may be done orally, in writing, or by any other method acceptable to the Contracting Officer.

(c) The Contracting Officer should normally chair any debriefing session held. Individuals who conducted the evaluations shall provide support.

(d) At a minimum, the debriefing information shall include-

(1) The Government's evaluation of the significant weaknesses or deficiencies in the offeror's proposal, if applicable;

(2) The overall evaluated cost or price (including unit prices) and technical rating, if applicable, of the successful offeror and the debriefed offeror, and past performance information on the debriefed offeror;

(3) The overall ranking of all offerors, when any ranking was developed by the agency during the source selection;

(4) A summary of the rationale for award;

(5) For acquisitions of commercial items, the make and model of the item to be delivered by the successful offeror; and

(6) Reasonable responses to relevant questions about whether source selection procedures contained in the solicitation, applicable regulations, and other applicable authorities were followed.

(e) The debriefing shall not include point-by-point comparisons of the debriefed offeror's proposal with those of other offerors. Moreover, the debriefing shall not reveal any information prohibited from disclosure by Federal Acquisitions Regulations 24.202 or exempt from release under the Freedom of Information Act (5 U.S.C. 552) including-

(1) Trade secrets;

(2) Privileged or confidential manufacturing processes and techniques;

(3) Commercial and financial information that is privileged or confidential, including cost breakdowns, profit, indirect cost rates, and similar information; and

(4) The names of individuals providing reference information about an offeror's past performance.

(f) An official summary of the debriefing shall be included in the contract file.

Sale Name: Foulds Springs Stewardship

PROSPECTUS ATTACHMENT

DESIGNATION BY SPECIES AND DIAMETER, KT-CT.3.5.2#

Payment Unit(s)	Designated Species	More than Stump Diameter /1	Less than Stump Diameter /1
05	All Spruce, Aspen, and Fir EXCEPT those marked with ORANGE paint	N/A	N/A
06	All Spruce, Aspen, and Fir EXCEPT those marked with ORANGE paint	N/A	N/A
08	All Spruce, Aspen, and Fir EXCEPT those marked with ORANGE paint	N/A	N/A

/1 All trees containing at least one piece of Minimum Specifications, as stated in AT.2

NOTE: All Payment Unit Boundaries are marked with orange paint slashes above and below stump height, except that there are no Boundaries painted along Forest Roads 125, 132, 430, 516 and 519 where the extent of the merchantable trees along those corridors are considered the Boundaries.

NOTE: White and black paint is known to exist in or near some units and blue paint is known to exist in unit 08. This paint has no contractual implications. There is also some old orange paint found in or near some units – this, too, has not contractual implications.

Sale Name: Foulds Springs Stewardship

PROSPECTUS ATTACHMENT

INDIVIDUAL TREES, CUT TREE MARKING, KT-CT.3.5.5#

see also STUMP MARKS, KT-GT.4.1.2

Payment Unit(s)	Paint Color
01	Green
02	Blue
02A	Blue
03	Blue
04	Blue
09	Green

NOTE: All Payment Unit Boundaries are marked with orange paint slashes above and below stump height, except that there are no Boundaries painted along Forest Roads 125, 132, 430, 516 and 519 where the extent of the merchantable trees along those corridors are considered the Boundaries. The only exception is Payment Unit 09 (Specified Road corridors), where the extent of the Green cut-tree-mark paint is considered the Boundary.

NOTE: White and black paint is known to exist in or near some units. This paint has no contractual implications.

Sale Name: Foulds Springs Stewardship

PROSPECTUS ATTACHMENT
ROAD MAINTENANCE REQUIREMENTS
KT.FT.3.1# Special Provisions

T-8620 Miscellaneous Maintenance (continued)

Gate Specifications, page 1 of 8

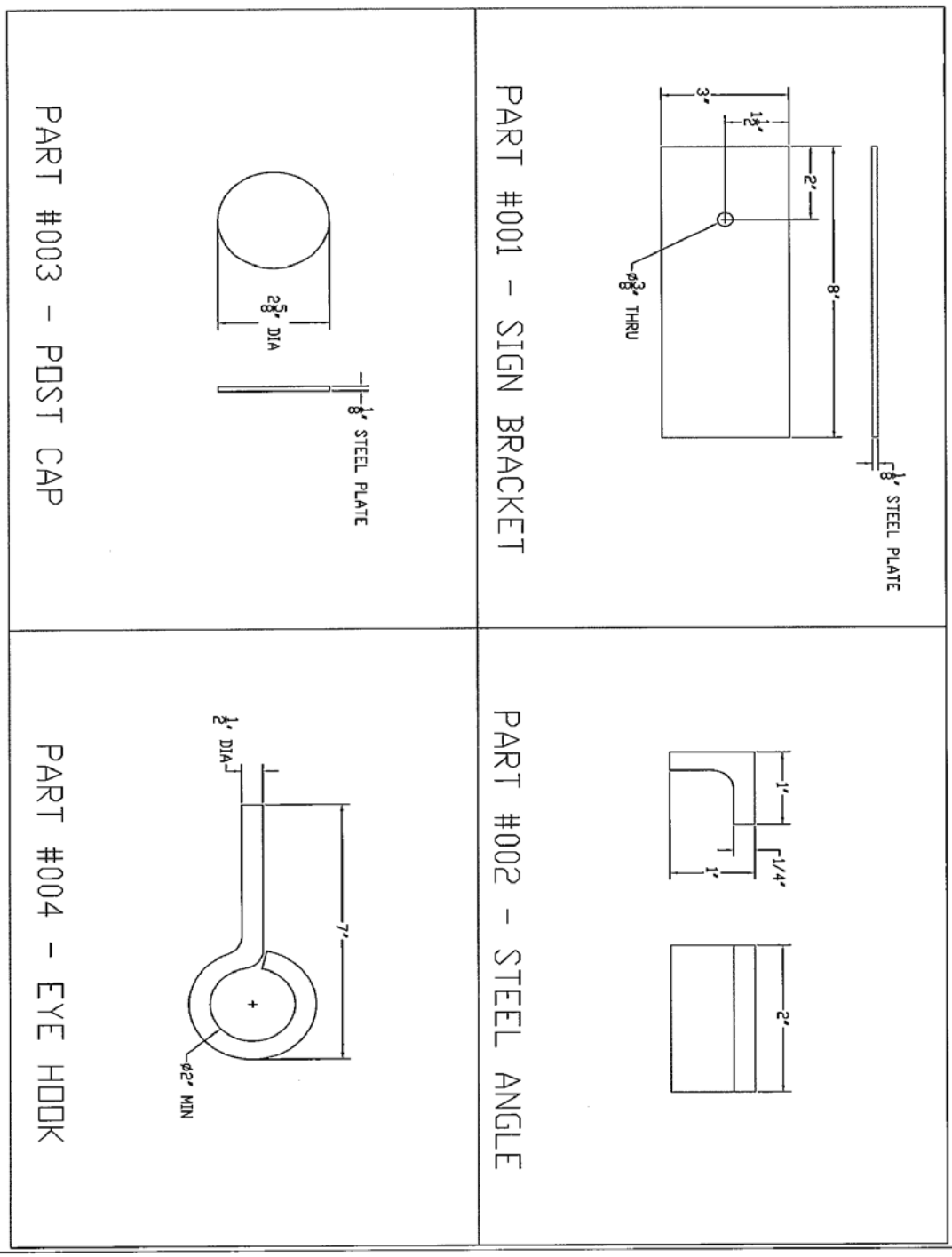

PROSPECTUS ATTACHMENT
ROAD MAINTENANCE REQUIREMENTS
KT.FT.3.1# Special Provisions

T-8620 Miscellaneous Maintenance (continued)

Gate Specifications, page 2 of 8

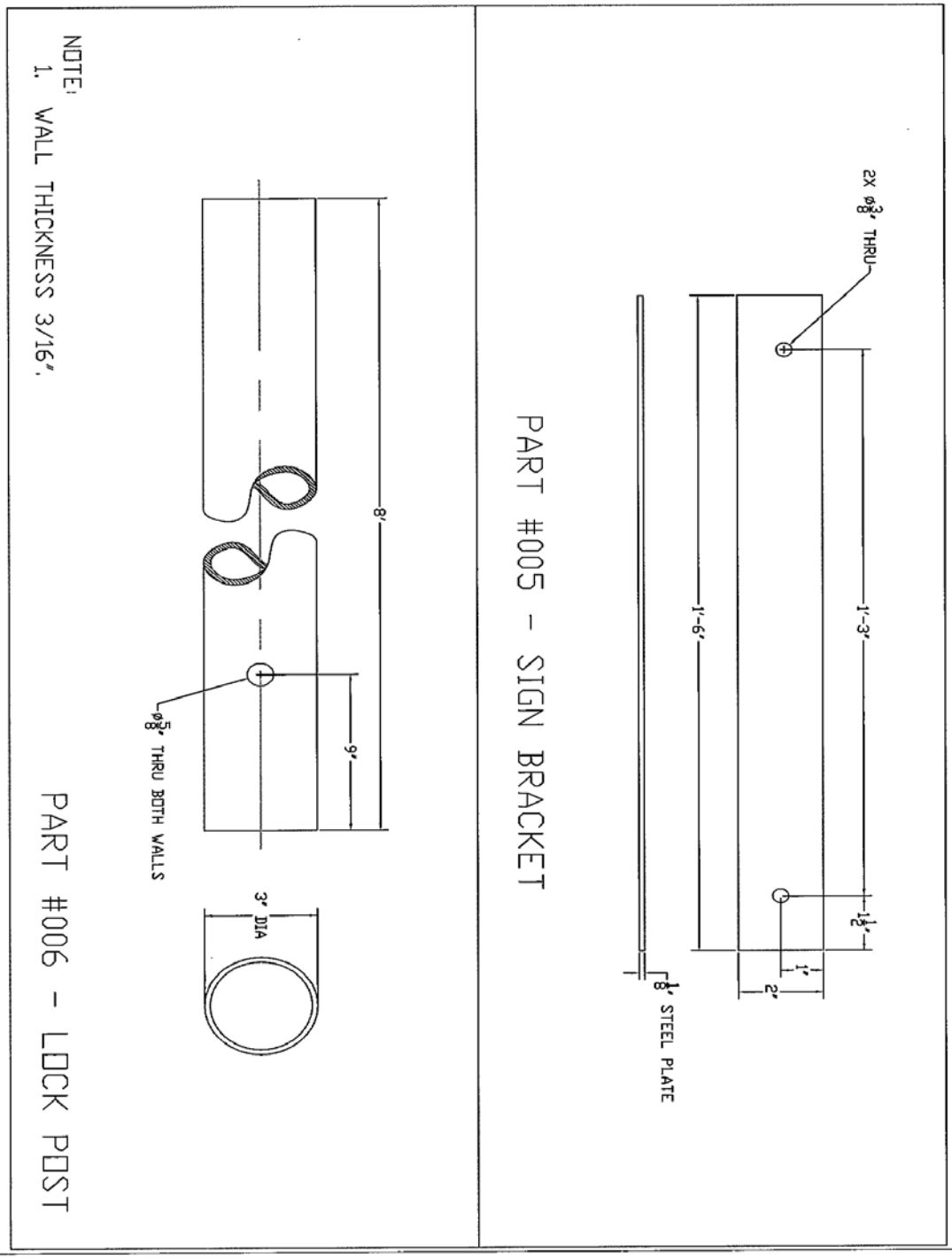

PROSPECTUS ATTACHMENT
ROAD MAINTENANCE REQUIREMENTS
KT.FT.3.1# Special Provisions

T-8620 Miscellaneous Maintenance (continued)

Gate Specifications, page 3 of 8

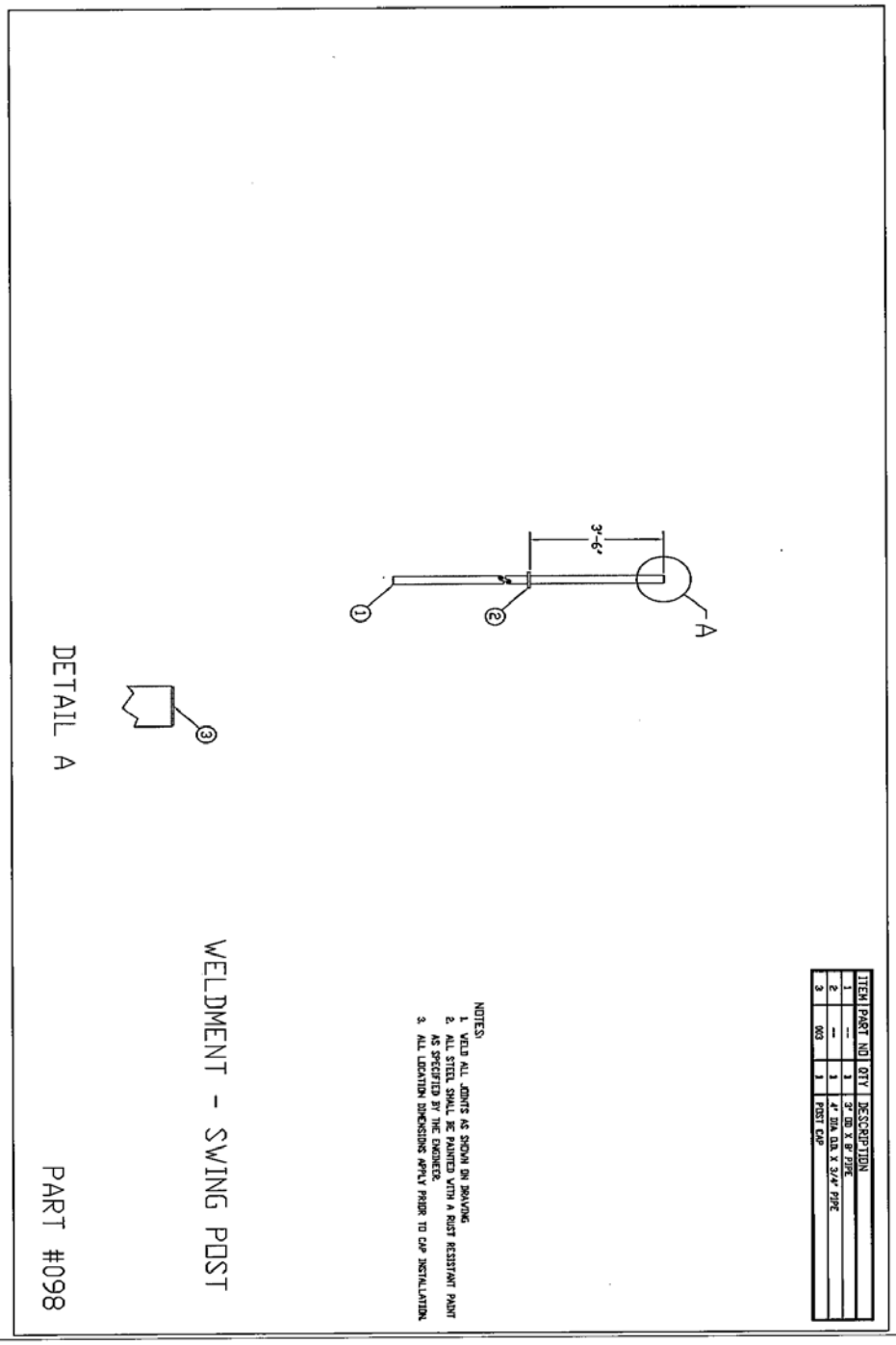

PROSPECTUS ATTACHMENT
ROAD MAINTENANCE REQUIREMENTS
KT.FT.3.1# Special Provisions

T-8620 Miscellaneous Maintenance (continued)

Gate Specifications, page 4 of 8

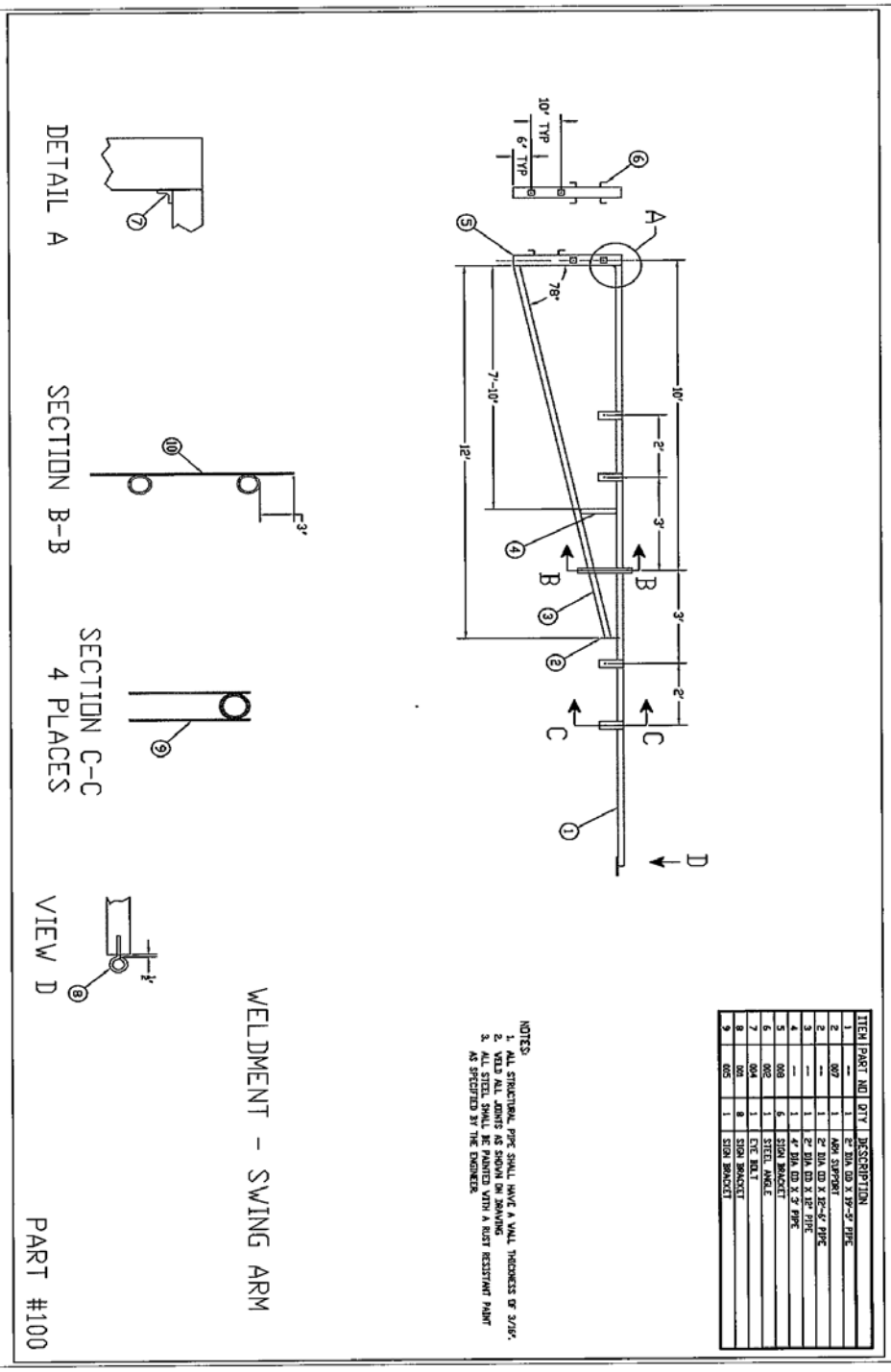

PROSPECTUS ATTACHMENT
ROAD MAINTENANCE REQUIREMENTS
KT.FT.3.1# Special Provisions

T-8620 Miscellaneous Maintenance (continued)

Gate Specifications, page 5 of 8

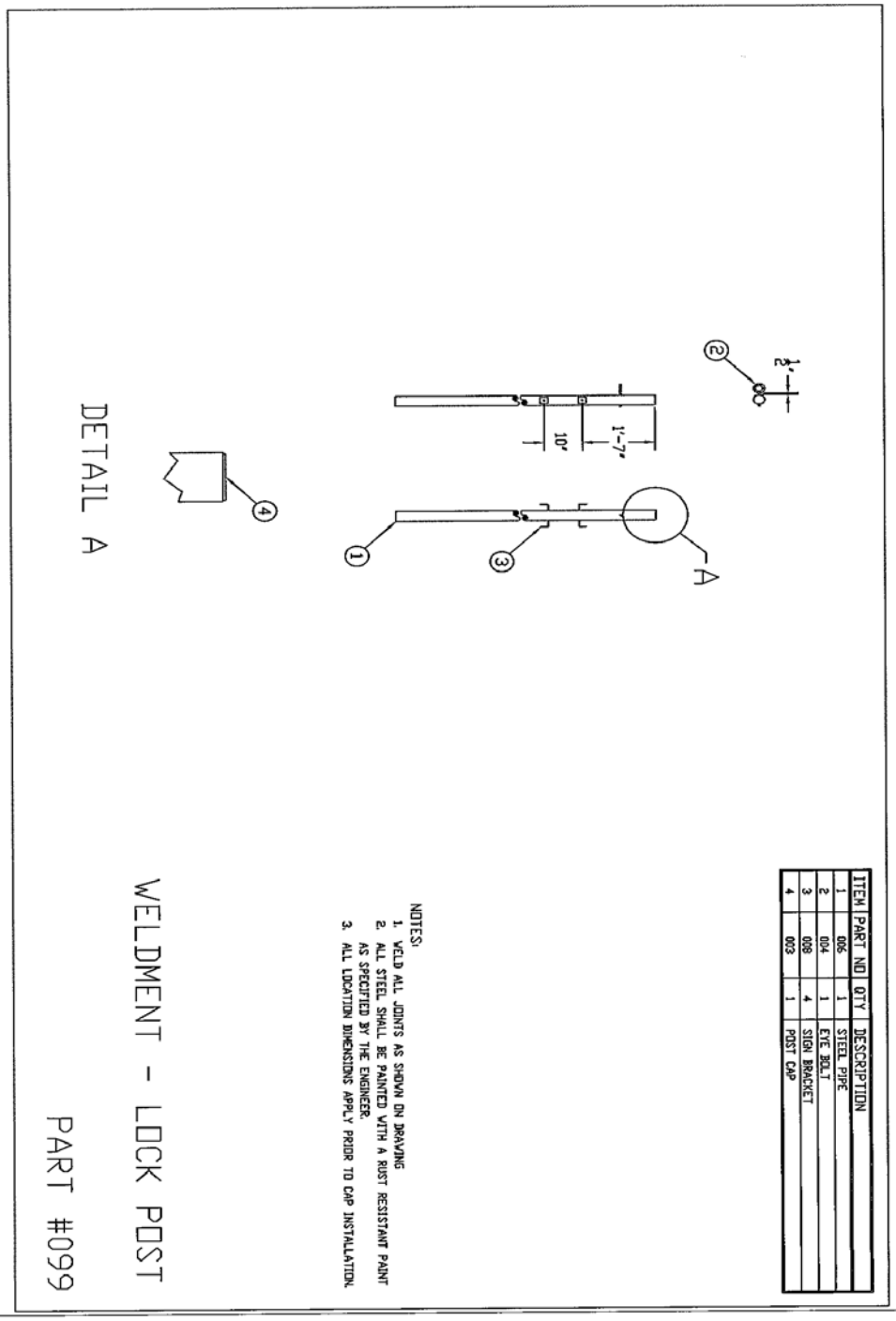

PROSPECTUS ATTACHMENT
ROAD MAINTENANCE REQUIREMENTS
KT.FT.3.1# Special Provisions

T-8620 Miscellaneous Maintenance (continued)

Gate Specifications, page 6 of 8

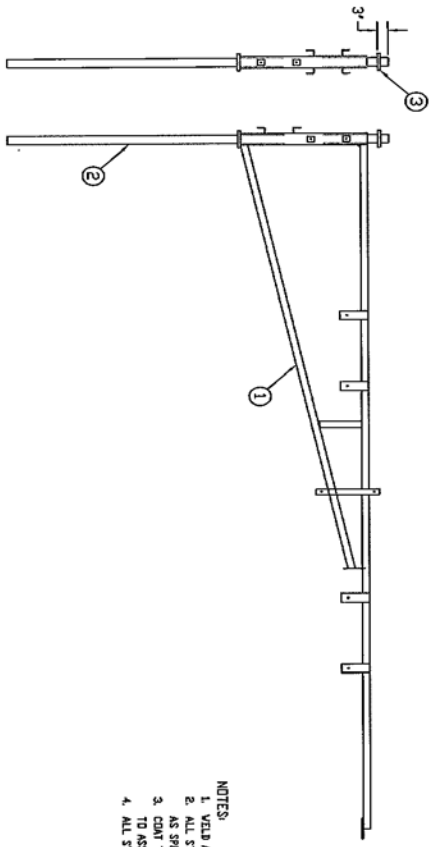

ITEM	PART NO	QTY	DESCRIPTION
1	098	1	SWING POST
2	100	1	SWING ARM
3	---	1	4" DIA OD X 3/4" PIPE

NOTES:
1. WELD ALL JOINTS AS SHOWN ON DRAWING
2. ALL STEEL SHALL BE PAINTED WITH A RUST RESISTANT PAINT AS SPECIFIED BY THE ENGINEER.
3. COAT THE MATING SURFACES OF ITEMS 1 AND 2 WITH GREASE PRIOR TO ASSEMBLY.
4. ALL STRUCTURAL PIPE SHALL HAVE A WALL THICKNESS OF 3/16".

GATE SWING ASSEMBLY

PART #101

PROSPECTUS ATTACHMENT
ROAD MAINTENANCE REQUIREMENTS
KT.FT.3.1# Special Provisions

T-8620 Miscellaneous Maintenance (continued)

Gate Specifications, page 7 of 8

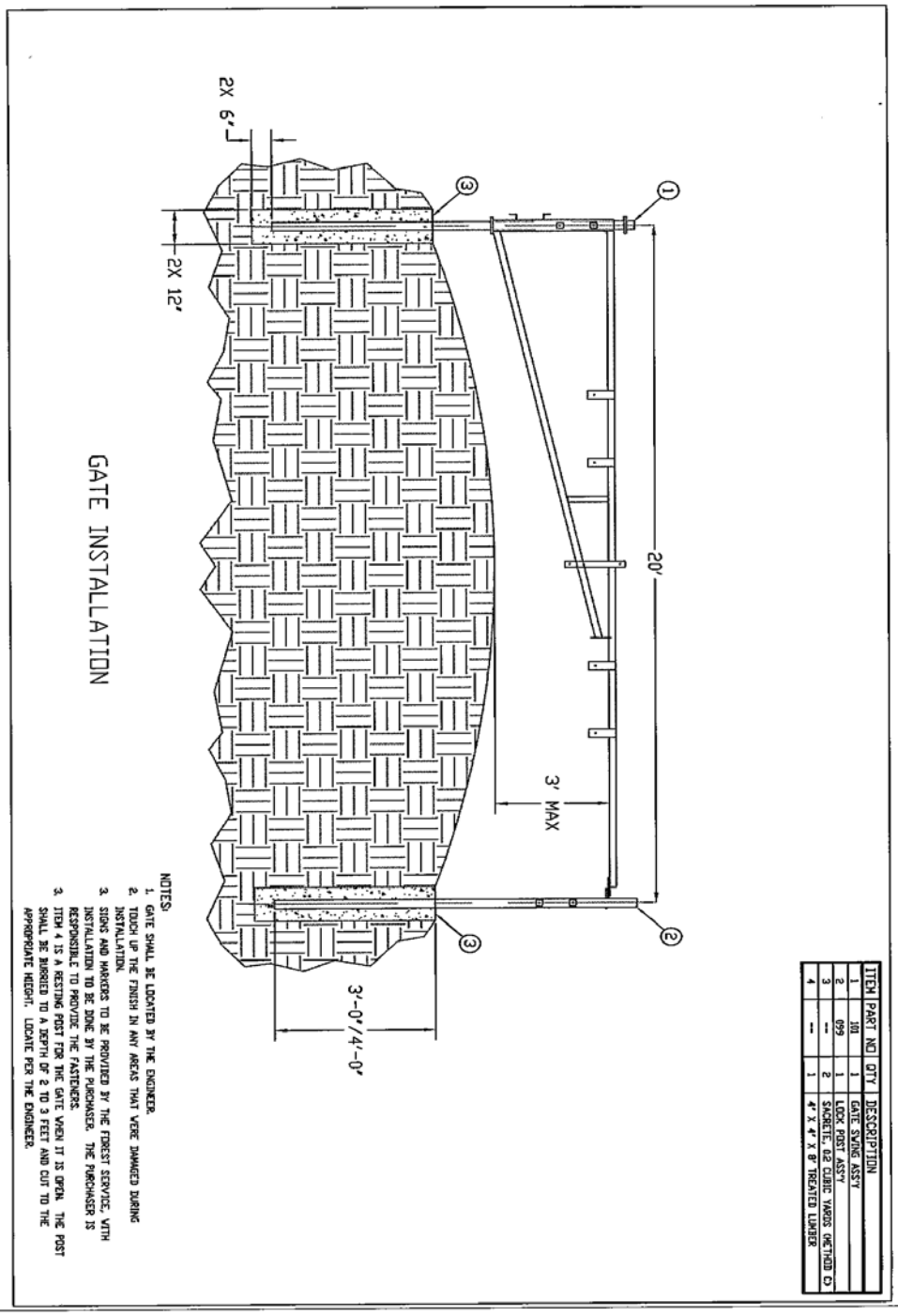

PROSPECTUS ATTACHMENT
ROAD MAINTENANCE REQUIREMENTS
KT.FT.3.1# Special Provisions

T-8620 Miscellaneous Maintenance (continued)

Gate Specifications, page 8 of 8

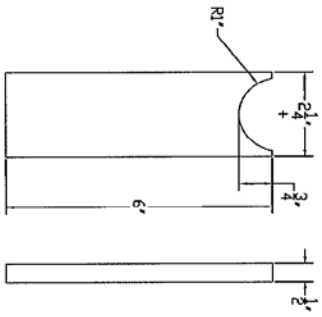

PART #007 - ARM SUPPORT

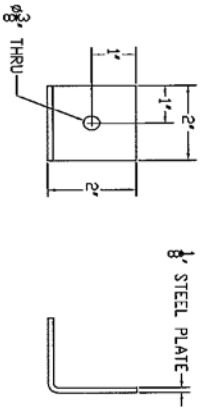

PART #008 - SIGN BRACKET

Sale Name: Foulds Springs Stewardship

PROSPECTUS ATTACHMENT
ROAD MAINTENANCE REQUIREMENTS
KT.FT.3.1# Special Provisions

SECTION 3. ROAD MAINTENANCE REQUIREMENTS SCHEDULE

Contract Road Maintenance Requirements Summary

Road	Termini		Miles	Applicable Prehaul Road Maintenance Specifications								
	From	To		T-8110	T-8130	T-8340	T-8420					
125	132	125B	0.9	P			P					
125B	125	End	0.2	P	P	P	P					
125C	125	End	0.2	P			P					
132V	132	End	0.1	P			P					
430	132	430C	0.7	P	P	P	P					
519	Town Rd	End	1.6	P	P	P	P					

Road	Termini		Miles	Applicable During Haul Road Maintenance Specifications								
	From	To		T-8110								
125	132	125B	0.9	P								
125B	125	End	0.2	P								
125C	125	End	0.2	P								
132V	132	End	0.1	P								
430	132	430C	0.7	P								
519	Town Rd	End	1.6	P								
132W*			0.1	P								
430A*			0.1	P								
430C*			0.4	P								

Road	Termini		Miles	Applicable Post Haul Road Maintenance Specifications								
	From	To		T-8110	T-8620							
125	132	125B	0.9	P								
125B	125	End	0.2	P								
125C	125	End	0.2	P								
132V	132	End	0.1	P								
430	132	430C	0.7	P								
519	Town Rd	End	1.6	P	P							
132W*			0.1	P								
430A*			0.1	P								
430C*			0.4	P								

P = Purchaser Performance Item, D = Deposit to Forest Service, D3 = Deposit to Third Party

***Specified Road. During & Post Haul Maintenance applicable after Specified Road work has been accepted.**

FOULDS SPRINGS TIMBER SALE

U.S. DEPT. OF AGRICULTURE
FOREST SERVICE

CHEQUAMEGON–NICOLET NATIONAL FOREST
PARK FALLS RANGER DISTRICT
PRICE COUNTY, WISCONSIN

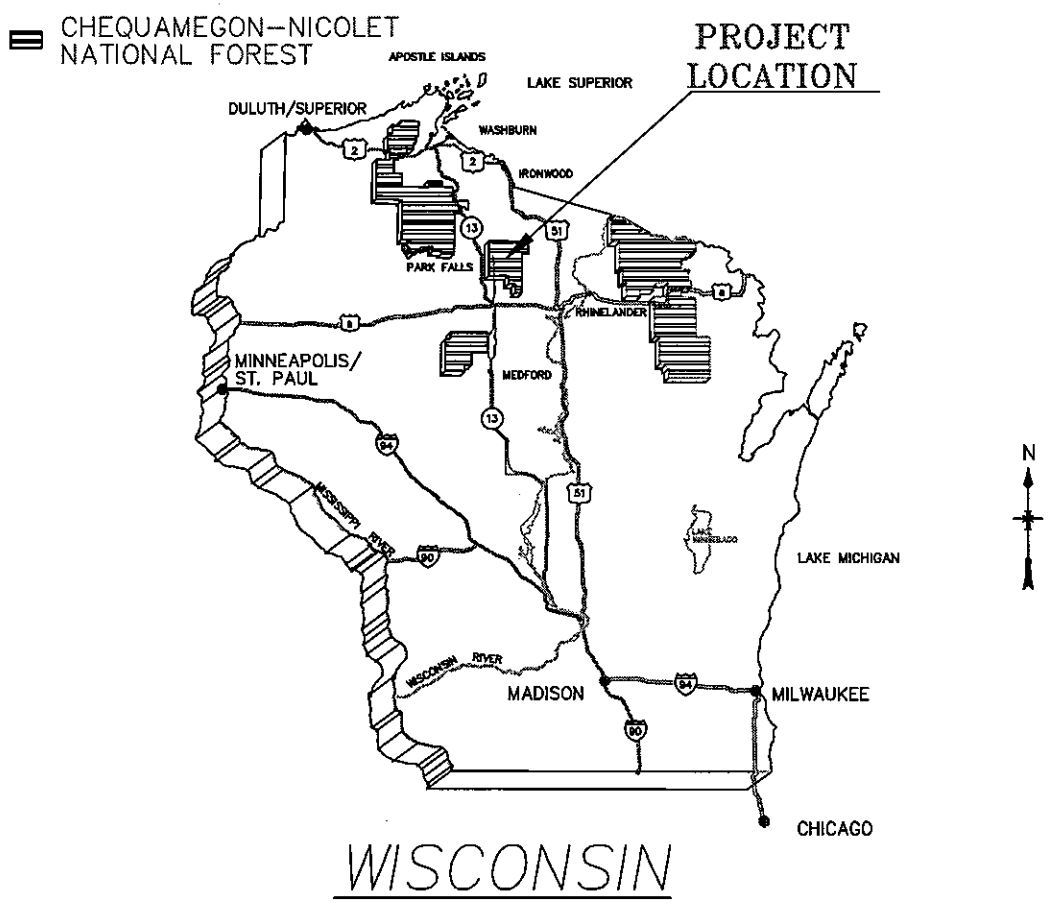

INDEX OF SHEETS

SHEET	CONTENTS
1	COVER SHEET
2	LOCATION MAP
3	ESTIMATE OF QUANTITIES
4	TYPICALS
5	TYPICALS
6	PLAN & PROFILE, FR 132W
7	PLAN & PROFILE, FR 430A
8–10	PLAN & PROFILE, FR 430C

APPROVED:

Chequamegon–Nicolet National Forest
Engineering–Supervisors Office

FOREST ENGINEER _____ DATE _____

These drawings comply with the Forest Plan and project specific NEPA documentation

Chequamegon–Nicolet National Forest
District Office–Park Falls

DISTRICT RANGER _____ DATE _____

LOCATION MAP

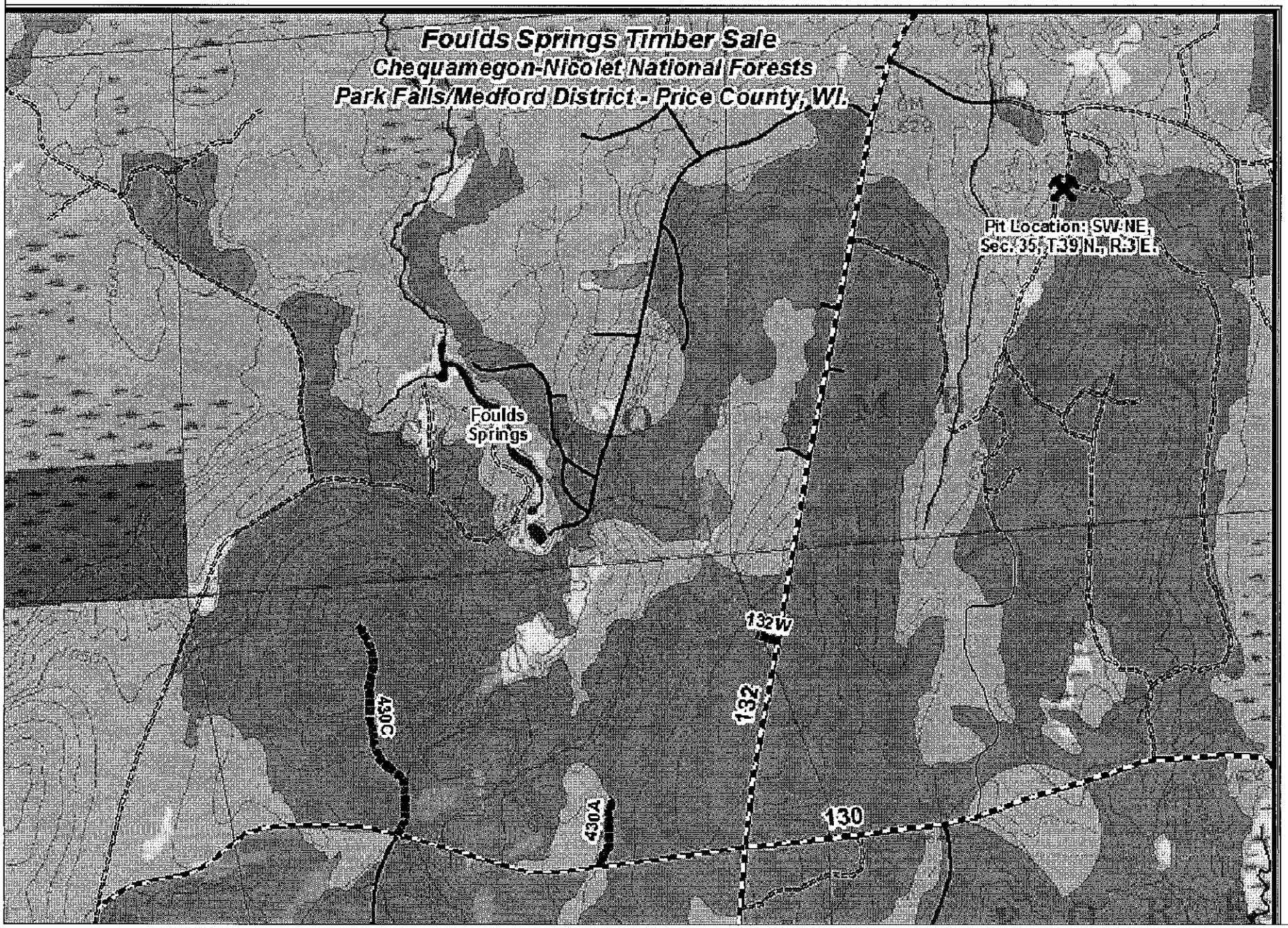

ESTIMATE OF QUANTITIES

PAY ITEM	PAY ITEM DESCRIPTION	QUANTITY FR 132W	QUANTITY FR 430C		QUANTITY FR 430A							UNIT
15101	Mobilization		1									EA
21202	Linear Grading	1	1		1							L.S.
30111	Aggregate Surface Course, Compaction Method "E", Government Furnished	50	50		50							CY
60201	12" Polyethylene Pipe, Type S, Dual Wall, Smooth Flow		64		68							L.F.

GENERAL NOTES

Rocks may be encountered during construction of the roadway. The cost for excavating & scattering them is included in item 21202, Linear Grading. Clearing & Grubbing, Excavation & Embankment, and Seeding&Fertilizing are also included in the cost for Item 21202. Slash Treatment Method C

All borrow excavation quantities are compacted in place quantities. Construct the roadway to the typical section before placing the borrow excavation. Prior to placement of borrow excavation the subgrade must be approved by the Engineer. Compact the borrow excavation by operating spreading and hauling equipment over the full width of the road.

Existing cleared areas within the clearing limits, areas adjacent to existing roads that feature brush and trees three inches in diameter or less are considered incidental to construction and are not included in the pay quantity for clearing and grubbing acres as covered under item 21202, Linear Grading.

The designated source for Aggregate for this project is a Government Pit, Sieverson Pit, located off FR 124, SW ¼ of NE ¼ Sec 35 T39N R3E, For estimating purposes costs were calculated from this pit. The contractor may at their option obtain all material from a commercial source. No adjustment in estimated costs shall be made for this choice however.

Pit development costs (reshaping) have been included in item 3012 Pitrun.

All Work Shall Be Done In Accordance With Wisconsin Best Management Practices .

WORK LIST FR 519A RECONSTRUCTION

1) MP 0.00, Begin Reconditioning Of Roadbed
2) MP 0.00, Place 20 CY of Aggregate at intersection
3) MP 0.14, End Reconditioning, End Of Project

WORK LIST FR 522 RECONSTRUCTION

1) MP 0.49 Begin Project, Begin Road Reconditioning
2)MP 0.49 To MP 0.945, Place 200 CY of Aggregate as needed/directed by the Engineer
3)MP 0.583, Install 17" x 13" x 30' CMPA
4) MP 0.945 End Road Reconditioning, End Of Project

WORK LIST FR 522E RECONSTRUCTION

1)MP 0.00, Begin Road Reconditioning,
2)MP 0.625 End Reconditioning Of Roadbed, Begin Linear Grading
3) MP 0.80 End Of Project, End Linear Grading

TYPICALS

A	Total Removal	0 - 10'
B	24" Max. Height	0 - 100'

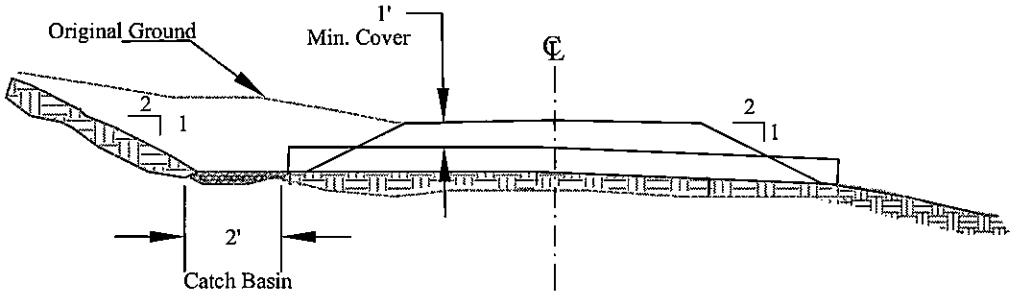

Typical Culvert Installation

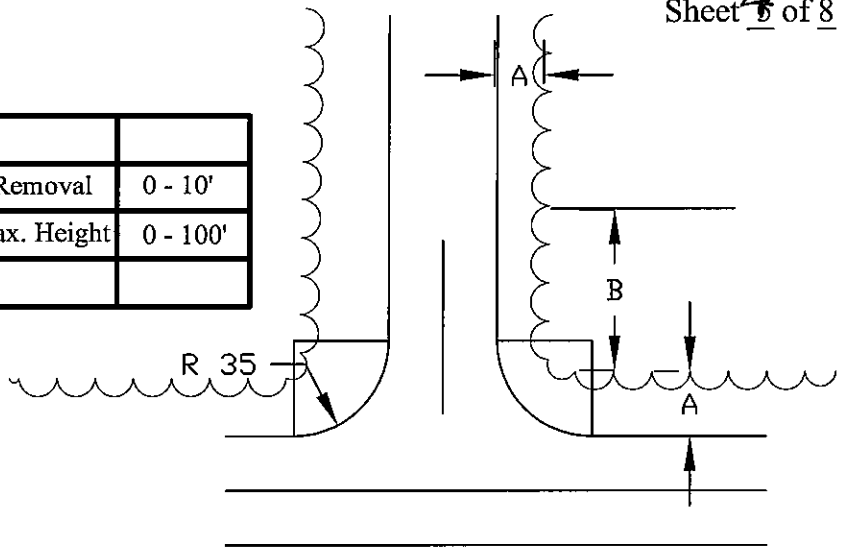

Treatment of Construction Slash

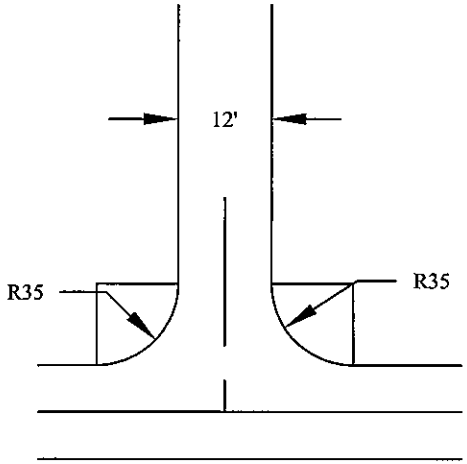

TYPICAL ENTRANCE

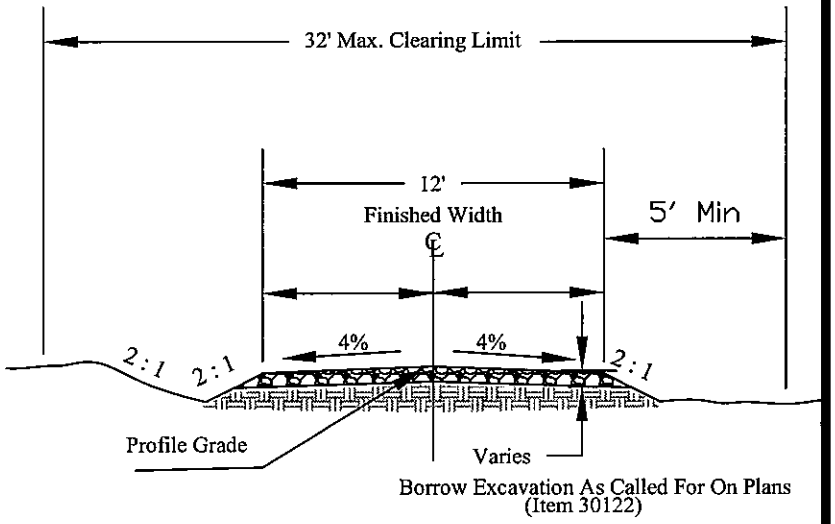

TYPICAL SECTION

Typical Single T Turnaround

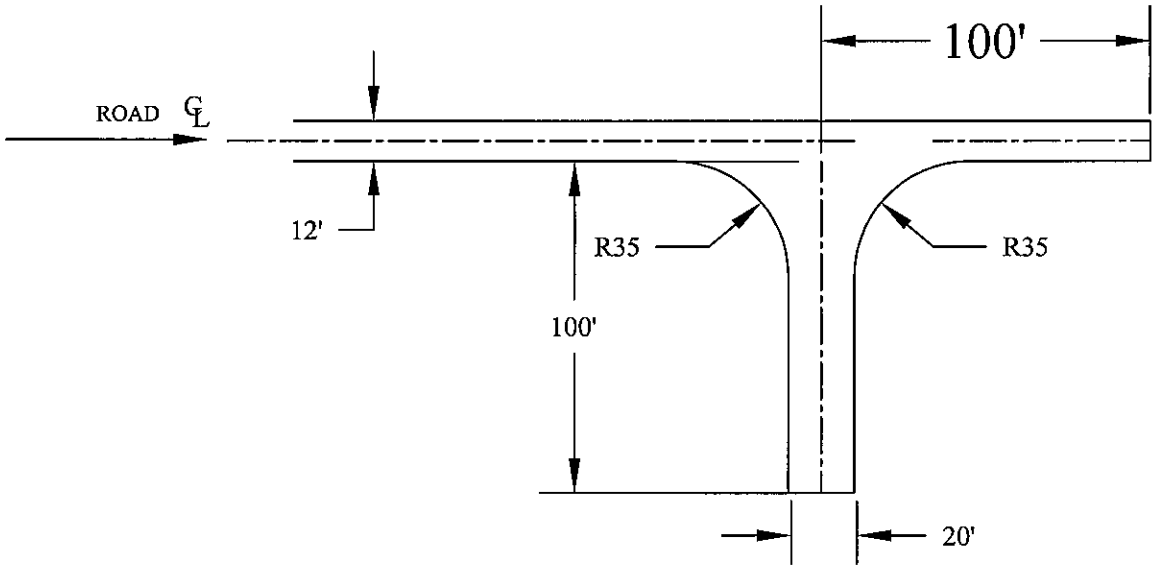

NOTE:

T Turnaround Construction
is incidental to Pay Item 299(03)

PLAN & PROFILE FR 132W

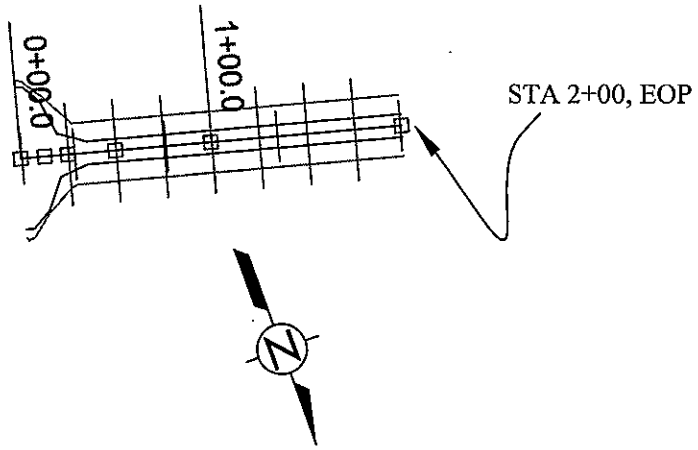

SCALE: 1"=100' HORIZONTAL
1"=10' VERTICAL

Place 50 CY of Aggregate at Intersection

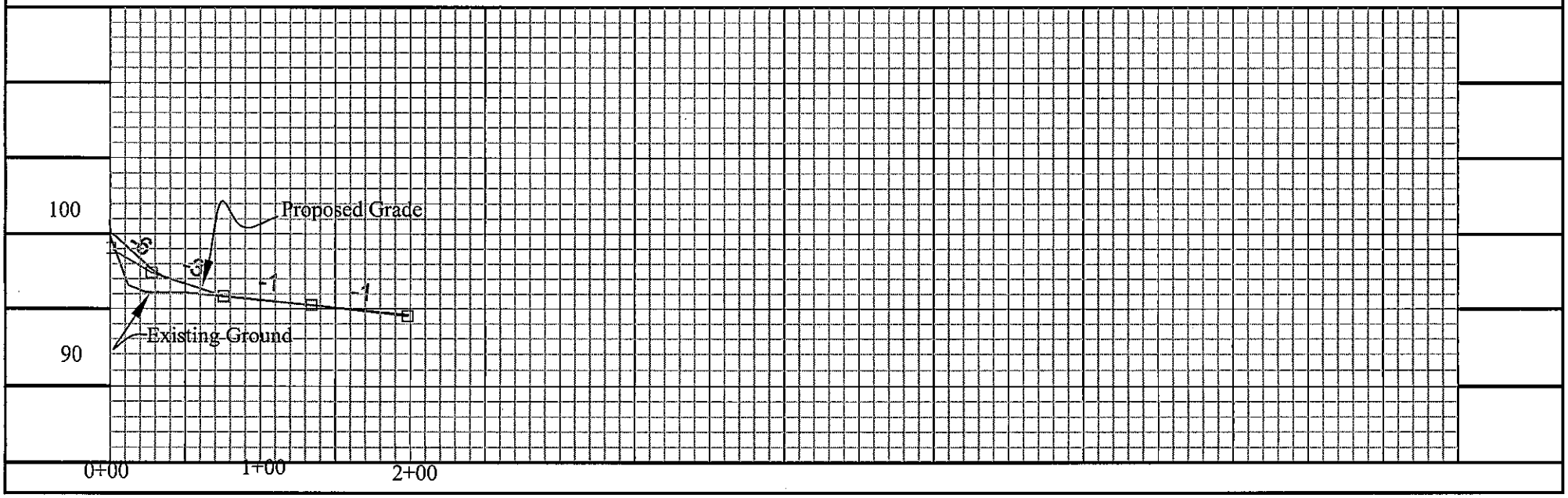

PLAN & PROFILE FR 430A

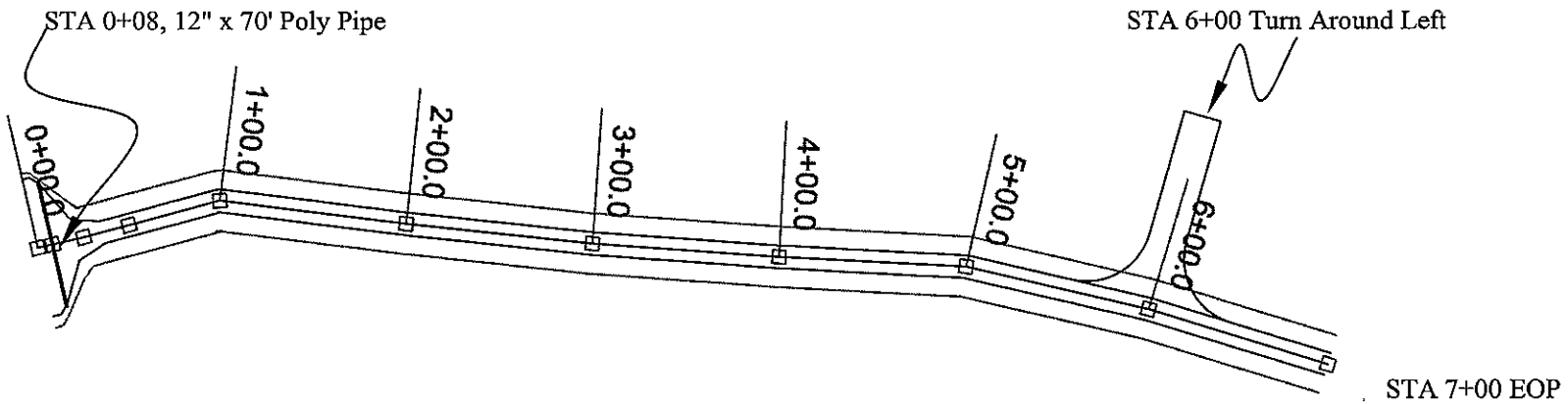

SCALE: 1"=100' HORIZONTAL
1"=10' VERTICAL

Place 50 CY of Aggregate at Intersection

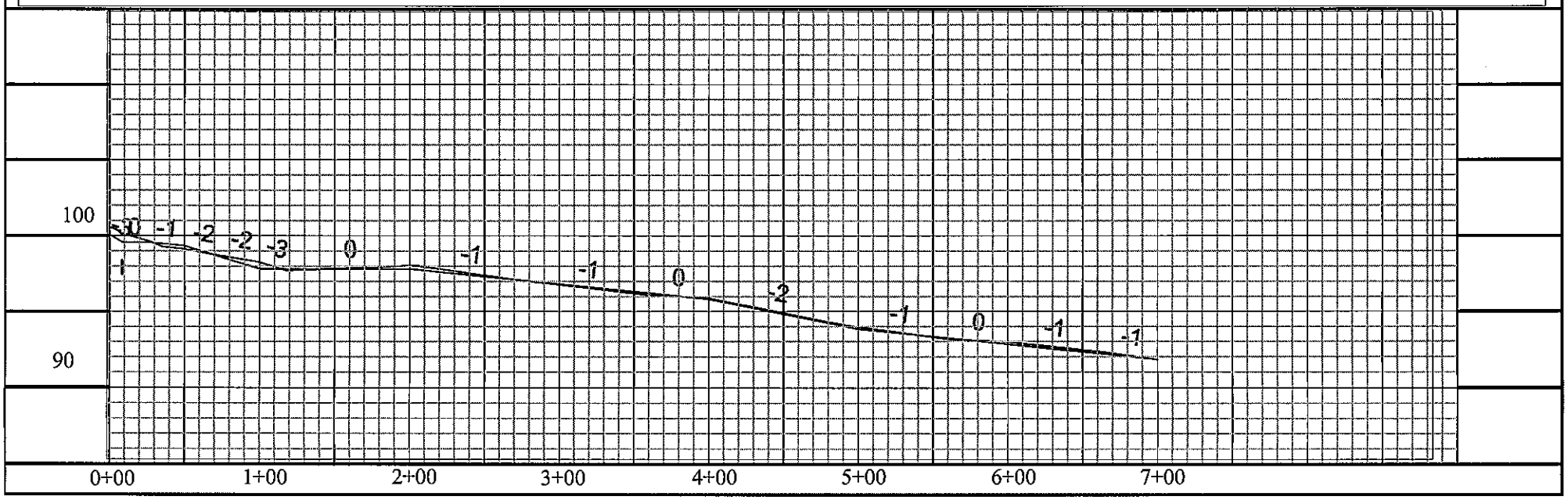

PLAN & PROFILE FR 430C

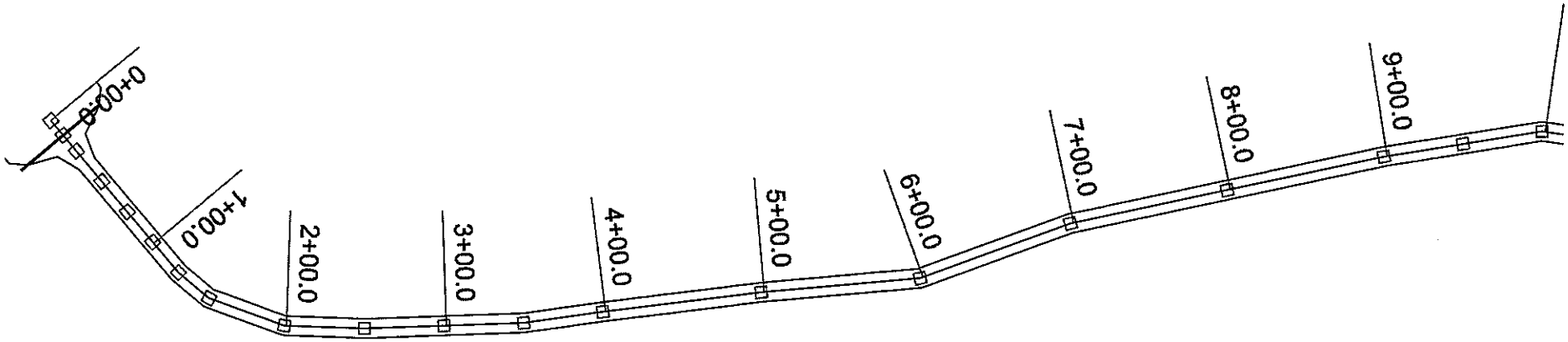

SCALE: 1"=100' HORIZONTAL
1"=10' VERTICAL

Place 50 CY of Aggregate at Intersection

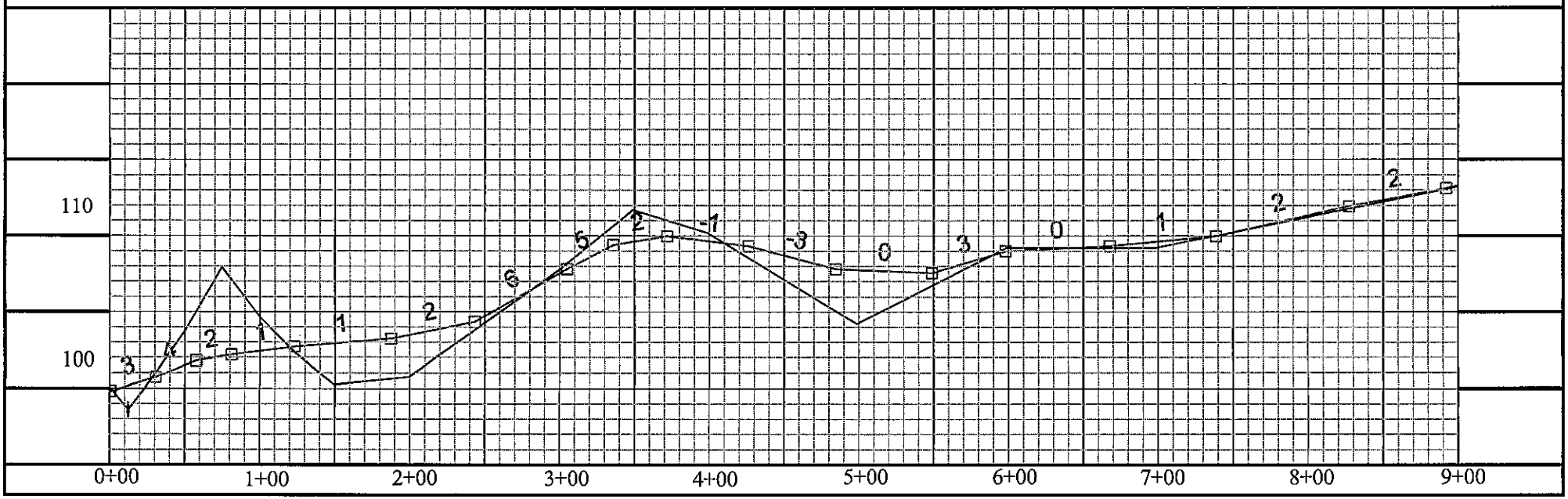

PLAN & PROFILE FR 430C

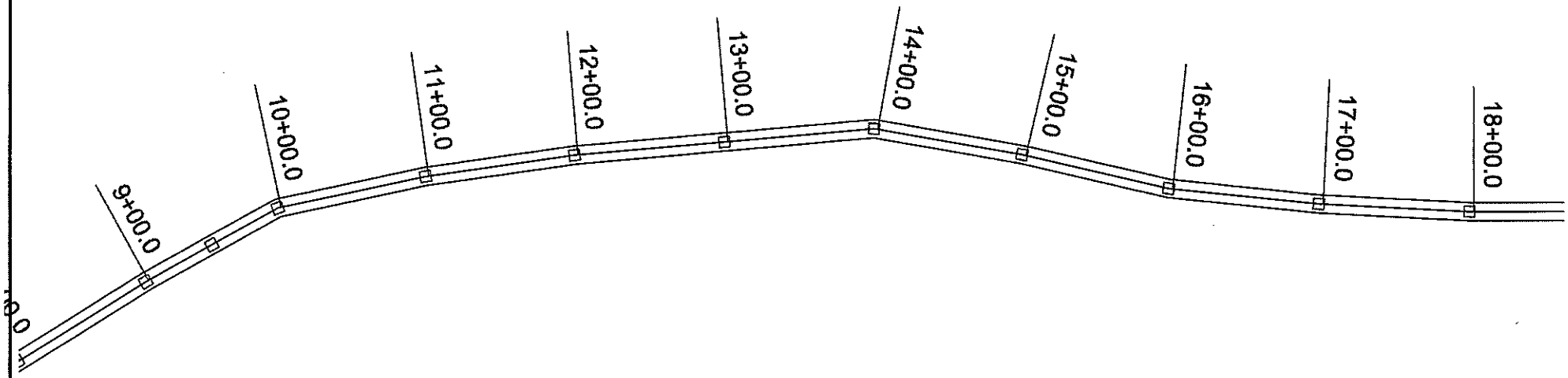

SCALE: 1"=100' HORIZONTAL
1"=10' VERTICAL

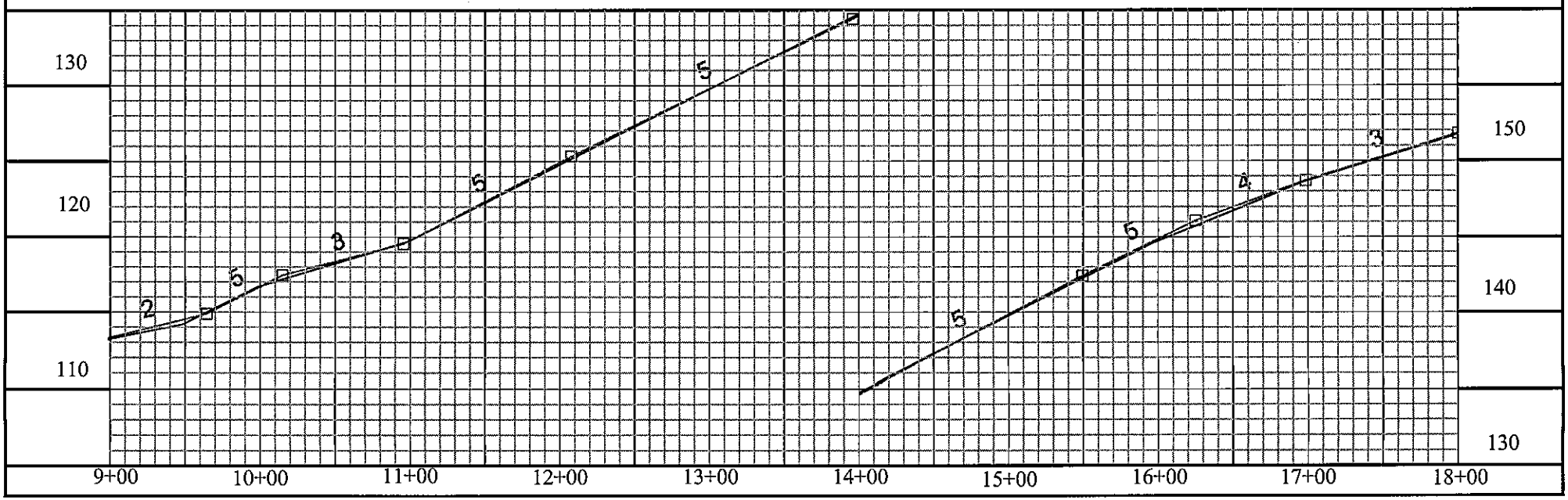

PLAN & PROFILE FR 430C

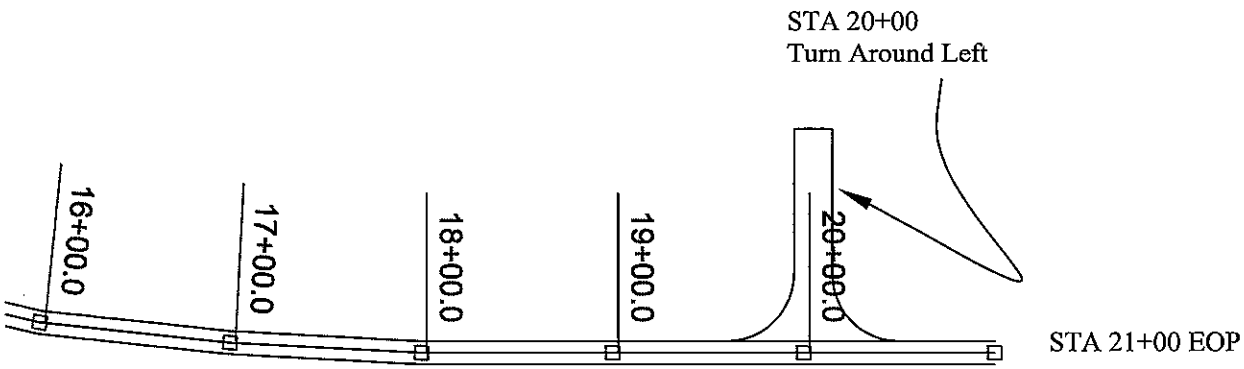

SCALE: 1"=100' HORIZONTAL
1"=10' VERTICAL

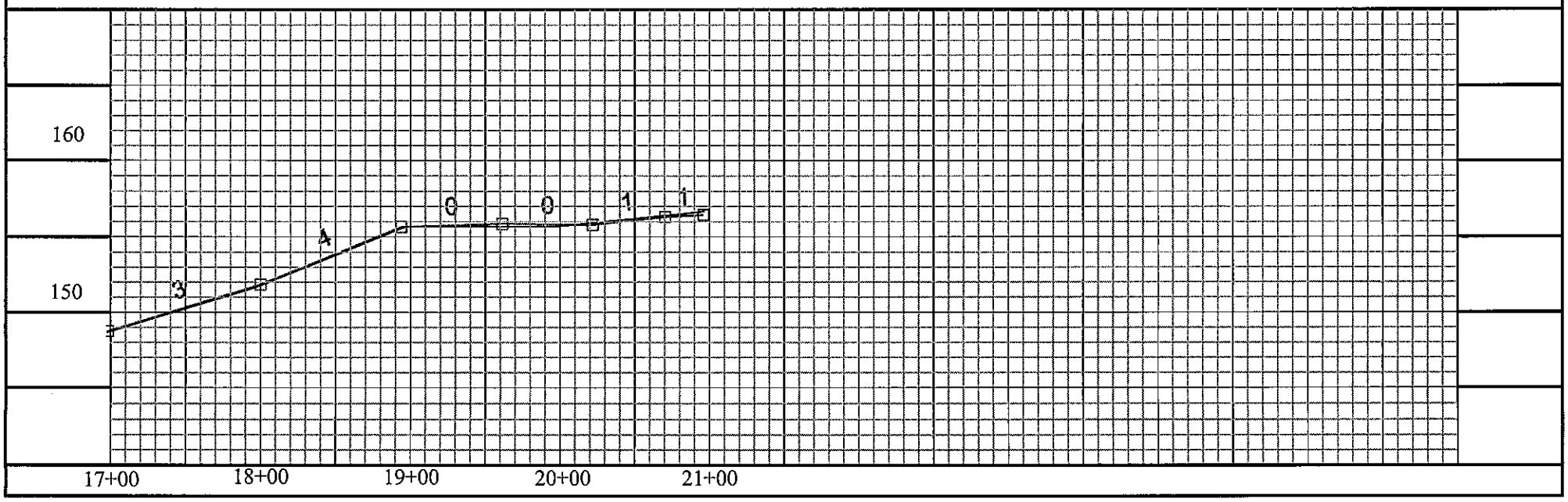

CONTRACT AREA MAP

Foulds Springs Integrated Resource Contract
Medford-Park Falls Ranger District
Chequamegon-Nicolet National Forest
T39N, R3E, Sections 33, 34, 35
T38N, R3E, Sections 2, 3, 4
Scale: 4 inch = 1 mile (1:15,840)
05/01/2015 AM
Sheet 1 of 1

0 0.125 0.25 0.5 Miles

N

Non-Forest Service Ownership
Waterbody
Sale Area Boundary, BT1.1
Payment Unit Boundary, BT1.1
Payment Unit Number, BT1.1
WL Wetlands Protection, GT.6.2
Existing Transportation System, FT.1.2
CN Specified Road, New Construction, FT.2
P Use of Road Prohibited, KT-FT.1.2
T Traffic Control Device, GT.3.3
Protect Improvement, Trail, GT.2.2
Protect Improvement, Gate, GT.2.2
Protect Known Survey Monument, GT.2.3

Payment Unit Number	Designation by Species and Diameter CT2.352#	Cut Tree Marking CT2.355#	Special Measures Area BT6.24	Slash Disposal Measures CT6.7#
01		CTM	SMA	SDZ(2)
02		CTM		SDZ(2)
02A		CTM		SDZ(2)(3)
03		CTM	SMA	SDZ(1)(2)
04		CTM		SDZ(2)
05	DxSPP			
06	DxSPP		SMA	SDZ(2)
08	DxSPP		SMA	SDZ(2)
09		CTM		SDZ(2)

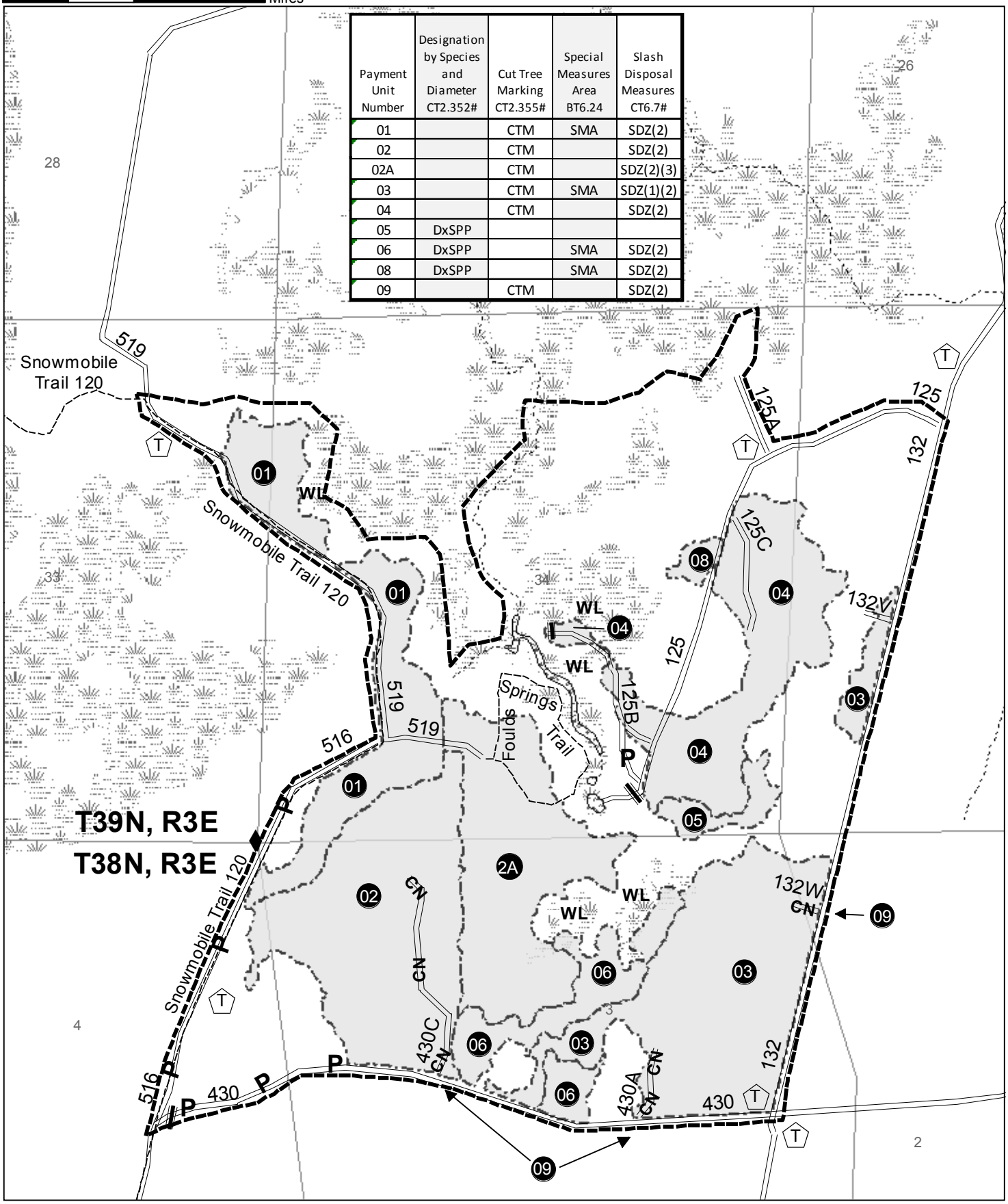

Sale Name: Foulds Springs Stewardship

PROSPECTUS ATTACHMENT
ROAD MAINTENANCE REQUIREMENTS
KT.FT.3.1# Special Provisions

SECTION 4. ROAD MAINTENANCE SPECIFICATIONS

INCLUDED SPECIFICATIONS

Specification No.	Specification Title
T-8110	Maintenance Blading/Grading
T-8130	Spot Surface Course Placement/Replenishment
T-8340	Drainage Structure Maintenance
T-8420	Cutting Roadway Vegetation
T-8620	Miscellaneous Maintenance

PROSPECTUS ATTACHMENT
ROAD MAINTENANCE REQUIREMENTS
KT.FT.3.1# Special Provisions

T-8110 Maintenance Blading/Grading

DESCRIPTION

1.1 Maintenance Blading/Grading is keeping an aggregate surfaced Roadbed in a condition to facilitate traffic and provide proper drainage. It includes maintaining the Crown, Inslope or Outslope of the Traveled Way, Turnouts, and Shoulder; repairing Berms; blending approach road intersections; and cleaning Drainage Dips and Lead-off Ditches.

EQUIPMENT

2.1 The equipment required to shape, spread, and compact surfacing is listed below.

Road Number	Road Termini - From	Road Termini - To	Equipment Description
ALL	Entire Length		Dozer, or other equipment approved by the Forest Service

REQUIREMENTS

3.1 Maintenance Blading/Grading shall be performed to facilitate traffic and proper drainage before, during, or after Purchaser's use as required by Section 3. Road Maintenance Requirements Schedule.

3.2 The surface blading shall preserve the existing cross-section. Surface irregularities shall be eliminated and the surface left in a smooth, free-draining state needed to facilitate traffic. Surface Course Material which has been displaced to the Shoulders or Turnouts shall be returned to the Traveled Way. The blading operation shall be conducted to conserve Surface Material and to provide for a thorough mixing of the Material being worked.

3.3 On aggregate surfaced roads Material generated from back slope Sloughing and ditch cleaning shall not be blended with Surface or Base Course Material unless agreed otherwise

3.4 Roadway back slopes shall not be undercut.

3.5 Drainage Dips and Lead-off Ditches shall be cleaned and maintained to retain the existing line, grade, and cross-section.

3.6 Intersecting roads shall be bladed for a distance of 50 feet to assure blending of the surfaces.

3.7 Rocks or other Material remaining on the Traveled Way after the final pass that are 4 inches in diameter or larger shall be removed. The unsuitable Material shall be disposed of by side casting unless agreed otherwise. Side casting into streams, lakes, or water courses will not be permitted.

3.8 Material resulting from this activity shall not remain on or in structures, such as Culverts, cattle guards, ditches, bridges, and Drainage Dips.

3.9 Material resulting from this activity, plus any accumulated debris, shall be removed from roadway structures, such as concrete low-water crossings or fords.

PROSPECTUS ATTACHMENT
ROAD MAINTENANCE REQUIREMENTS
KT.FT.3.1# Special Provisions

T-8130 Spot Surface Course Placement/Replenishment

DESCRIPTION

1.1 Spot Surface Course Placement/Replenishment includes Subgrade preparation, furnishing, hauling, spreading and shaping materials in accordance with the requirements.

MATERIALS

2.1 Surface Course Material will be in accordance with the subsection 3.2 of these specifications. Only commercial sources of aggregate will be accepted, except surfacing material may also be purchased from the government, where available, by filling out a form 2600, paying the required fees, and obtaining a permit.

REQUIREMENTS

3.1 Subgrade Preparation. Prepare Subgrade to receive Surface Course Material at locations as designated on-the-ground by the Forest Service on roads listed below. Prepare the Subgrade by shaping the Roadbed to approximately the original cross-section and consistent with adjacent sections.

3.2 Furnish, haul and spread Material at locations designated on the ground by the Forest Service (FS). Compact the aggregate by operating spreading and hauling equipment over the full width of each layer of the aggregate, or by other methods as specified below.

Road Number	Type Material	Finished Compacted Thickness Specified	Total Quantity (Tons or cu.yds.)	Compaction Method
125B	Pit Run Gravel	N/A	Approx. 60 cu.yds.	N/A
430	Pit Run Gravel	N/A	Approx. 60 cu.yds.	N/A
519	Pit Run Gravel	N/A	Approx. 90 cu.yds.	N/A

3.3 Variations. The Purchaser will be required to furnish weight tickets to the FS for each load of commercially obtained crushed aggregate prior to the final inspection. For aggregate purchased from the government, a count of truck loads will be required in addition to finished depth checks for the placed and compacted aggregate**.** Widths and lengths will be as staked or from schedule. When it is mutually agreed that all or part of the Surface Course Material is not needed, the estimated cost of surfacing not placed shall be charged to the Timber Sale Account in accordance with BT8.31.

Sale Name: Foulds Springs Stewardship

PROSPECTUS ATTACHMENT
ROAD MAINTENANCE REQUIREMENTS
KT.FT.3.1# Special Provisions

T-8340 Drainage Structure Maintenance

DESCRIPTION

1.1 This work consists of maintaining and/or installation/removal of Drainage Structures and related items such as: inlet and outlet channels, existing riprap, trash racks, necessary geotextiles, pipes, and drop-inlets.

MATERIALS

2.1 All Materials used in the maintenance and/or installation/removal of Drainage Structures shall conform by type and specification to the Material in the structure being maintained or as indicated in the subsection 3.3 below.

REQUIREMENTS

3.1 Drainage Structures and related items shall be cleared of all foreign Material deposited above the bottom of the structure and all vegetative growth which interferes with the water flow. Material removed that cannot be incorporated into maintenance work shall be uniformly placed on fill slopes unless agreed otherwise.

3.2 Perform maintenance to insure the proper functioning of the head walls, aprons, inlet assemblies, riprap, trash racks and other facilities related to the Drainage Structure.

3.3 Install/remove ditches, drainage dips, rock crossings and/or culverts as shown below, and as marked on the ground. Installation of structures shall not begin without the presence of a FSR unless agreed to in writing by the FSR.

Road Number	Location	Remove/ Install	Type of Structure	Size	Quantity
125B	Various locations	Install	Metal Culvert	N/A	3
519	Just north of PU 01	Remove	Culvert	N/A	1
		Install	Plastic Culvert	24” x 28’	1
	Between 2 blocks of PU 01	Remove	Culvert	N/A	1
		Install	Plastic Culvert	24” x 28’	1

3.4 Installation shall be in accordance with construction industry standards and practices.

3.5 Culverts designated for removal/disposal shall become the property of the Purchaser and shall be disposed of properly.

3.1 Temporary culverts provided by the USFS shall remain the property of the government.

3.7 Bridges. Any miscellaneous parts needing repair or replacement during normal use of any bridge during haul shall be considered maintenance. This includes minor items such as object markers, running planks that have loosened or cracked deck boards, or drainage structures which may become plugged. Bridge decks that are dirt and dust covered shall be cleaned to allow for proper drainage and for safety of the user.

Sale Name: Foulds Springs Stewardship

PROSPECTUS ATTACHMENT
ROAD MAINTENANCE REQUIREMENTS
KT.FT.3.1# Special Provisions

T-8420 Cutting Roadway Vegetation

DESCRIPTION

1.1 This work includes removal of brush, trees and other vegetative growth from within the clearing limits. This may include brush mowing of shoulders to prevent larger growth which would inhibit travel in the future.

EQUIPMENT

2.2 Equipment use may include farm tractor mounted mowing or brushing equipment.
If brushing equipment is required it must be of a size and power to cut off and masticate stems up to four inches in diameter. Larger growth may require hand clearing with a chainsaw or mechanized equipment able to handle larger trees.

REQUIREMENTS

3.1 Vegetative matter within the Roadway which impedes vehicular travel, and/or interferes with road maintenance operations, such as surface blading and ditch and culvert cleaning shall be removed. Downed timber meeting utilization standards shall be cut in appropriate lengths and decked in locations where agreed upon and the Traveled Way or sight distances will not be impaired.

3.2 Vegetative matter removed from the clearing limits shall be scattered outside the clearing limits at least _N/A_ feet perpendicular to the road surface.

3.3 Trim tree branches that extend over the road surface and shoulders to attain a clear height of 14 feet. Trim branches flush with the tree or as close as possible without causing damage or scarring to the bole. Area shall be left neatly trimmed.

3.4 Any stump removed shall be placed in an upright position out of the clearing limits.

3.5 Area shall not be left in an unsightly condition. The FSR shall have the final say over how the area is left.

Sale Name: Foulds Springs Stewardship

PROSPECTUS ATTACHMENT
ROAD MAINTENANCE REQUIREMENTS
KT.FT.3.1# Special Provisions

T-8620 Miscellaneous Maintenance

DESCRIPTION

1.1 Maintenance of miscellaneous structures includes cattle guards, gates (this includes all types of closure devices such as logs, rocks, dirt berms, dirt and slash berms, metal gates, etc), signs, and other similar structures that have been previously installed to insure safe and efficient operation of the road.

MATERIALS

2.1 Any Materials needed in the maintenance of miscellaneous structures shall be similar in type and quality to the Material in the structure being maintained.

REQUIREMENTS

3.1 Cattle guards. Loose rails shall be welded or bolted back in place.
Excess Material carried into the cattle guard shall be removed when drainage is blocked or when it reaches six inches from the bottom of the cattle guard frame. Drainage into and from the cattle guard shall be kept open.

3.2 Gates (and other closure devices). Gates shall be kept in good repair and made to swing easily. Hinges or latches shall be repaired if not operating properly. Brush and debris shall be removed from within the swinging radius. Weathered berms or wood piles shall be reconstructed to a height which discourages use and blocks the road.

3.3 Signs. Any signs needing repair or replacement shall be installed per sign placement detail or MUTCD direction. All roads shall have legible sign numbers. ML 3-5 roads shall have horizontal numbering and ML 1-2 roads shall have vertical numbers. The material used shall be as directed by the Forest Service Representative. All new signs must meet retroreflectivity requirements.

Road Number	Road Name	Location	Remove/ Install	Type of Item	Size	Quantity
519	519	North of Snowmobile Trail	Remove	Gate	N/A	1
		On Snowmobile Trail at Intersection with 519	Install	Gate*	N/A	1
		At intersection with 516	Install	Gate**	N/A	1
		At end of Road	Install	Gate**	N/A	1

***Install Gate that was removed North of Trail. If Gate is damaged during removal, Contractor will be responsible to replace in-kind at their expense.**

****See specifications for Gate to be furnished and installed by Contractor.**

PROSPECTUS ATTACHMENT

KT-GT.9# - STEWARDSHIP PROJECTS

Project Number	Project Description	Units of Measure	Quantity
1	**CANOPY GAP SITE PREP** **PAYMENT UNITS 01, 02, 02A, 03, 04,** Objective is to cut submerchantable stems (>1.0" DBH) within canopy gaps created during the harvest. Canopy gaps are defined as a space in the forest canopy created by the removal of one or more trees from the main stand of trees. They are measured from the edge of the tree crown along the edge of the opening to the edge of the tree crown across the opening. Gaps are generally created at a rate of 2 to 6 gaps per acre and range from 30 to 80' in diameter. They provide diversity and allow for regeneration of desirable tree species. Canopy gaps were identified during stand marking by marking some submerchantable stems within gap with marking paint; generally a an "X". All stems within gaps will be completely severed from the stump, at no more than 12 inches above the ground, and the cut face of the stump shall be no more than 15 degrees. Once felled, stems shall lie flat on the ground and shall not lie within riparian areas, stream courses, roads, or recreational trails. Work can be accomplished either during or after harvest of Included Timber with the mechanized equipment used for harvesting Included Timber. Chainsaws or brush saws are also acceptable for use in performing this work. Other mechanized equipment shall be used only by agreement with the Forest Service.	Acre	**410**

SOLICITATION AND OFFER FOR INTEGRATED RESOURCE CONTRACT

1. Contract Number: 11404	2. Date and Time for Receipt of Offers: 06/23/2015 11:00 AM	3. Opened By:	4. In the Presence of:

5. Contract Name: Foulds Springs Stewardship

6. National Forest: Chequamegon/Nicolet	7. Ranger District: Medford/Park Falls	8. Type of Offer: Best Value

9. To: (Title and address of Contracting Officer receiving offers)	10. Name of Newspaper:	11. Date Published:
Park Falls District Office Contracting Officer 1170 4th Ave. S. Park Falls, WI 54552	The Price County Review	05/21/2015
	12. City: ParkFalls, WI 54552	13. State: Wisconsin

INSTRUCTIONS TO CONTRACTING OFFICER: Verify that TIM has completed applicable blanks before sending to prospective Offerors. Attach copy of contract solicitation. Entries are required in blocks 1; 2; 5; 6; 7; 9; 10; 11; 12; 13; 14a, b, c, d, e, f, h, & i; 15a, b, c, & d; 19; and 24; and instructions 2, 5, and 10 for all contracts. Entries are required in block 14g for species with a fixed rate. Strike out spaces for entries in one or more of columns 14e, h, or i, if not applicable to the contract.

************In Response to the Notice of Integrated Resource Contract published in the newspaper specified above, and subject to the conditions attached hereto, the following offer is submitted and shall constitute a Firm Offer:************

14. Timber Offer Information:

Species (a)	Product (b)	Unit of Measure (c)	Estimated Quantity (d)	Rates Per Unit of Measure: Base Rate (e)	Advertised Rate (f)	Offer Rate (g)	Additional Deposits for Slash Disposal (h)	Base Indices (i)
Mandatory Timber Cutting Units								
Ash	Sawtimber	CCF	770.00	$1.00	$79.09		$0.00	N/A
Basswood	Sawtimber	CCF	98.00	$1.00	$72.90		$0.00	N/A
Softwood - Other	Sawtimber	CCF	152.00	$1.00	$68.44		$0.00	N/A
Hardwood - Other	Sawtimber	CCF	18.00	$1.00	$87.34		$0.00	N/A
Aspen	Pulpwood	CCF	524.00	$1.00	$36.25		$0.00	N/A
Softwood - Other	Pulpwood	CCF	307.00	$1.00	$37.16		$0.00	N/A
Hardwood - Other	Pulpwood	CCF	4,324.00	$1.00	$28.55		$0.00	N/A
Only the Fixed Rate Applies.						**Fixed Rate**		
Not Applicable								
Optional Timber Cutting Units (Offering Optional):								
Not Applicable								
Only the Fixed Rate Applies.						**Fixed Rate**		
Not Applicable								

15. Stewardship Project Offer Information:

Project Number (a)	Project Description (b)	Unit of Measure (c)	Estimated Quantity (d)	Rate per Unit (e)	Total Offer (d) x (e) (f)
Mandatory Stewardship Projects - Offeror must complete columns (e) and (f):					
1	Canopy gap site prep	Acres	410.00		
Optional Stewardship Projects (Offering Mandatory) - Offeror must complete columns (e) and (f):					
Not Applicable					

16. OFFEROR RESPONSIBILITY CERTIFICATION: Subject to the penalties prescribed in 18 USC 1001, Offeror certifies, by signing this offer form, that to the best of Offeror's knowledge that the following representations are accurate and complete:

a. That the Offeror has not employed or retained any company or person (other than a full-time bona fide employee working solely for the Offeror) to solicit or secure this contract.

b. That the Offeror has not paid or agreed to pay any company or person (other than a full-time bona fide employee working solely for the Offeror) any fee, commission, percentage, or brokerage fee, contingent upon or resulting from the award of this contract and agrees to furnish information relating thereto as requested by the Contracting Officer.

c. That the Offeror meets the requirements in 36 CFR 223.101 regarding determination of contractor responsibility.

d. That if awarded this contract that Offeror will complete the contract to its terms and any modifications thereof including requirements to purchase, cut, and remove the included timber or forest products and complete stewardship projects by the termination date.

16a. OFFEROR CERTIFICATION REGARDING DEBARMENT, SUSPENSION, AND OTHER RESPONSIBILITY MATTERS: Subject to the penalties prescribed in 18 USC 1001, Offeror certifies, by signing this offer form, that to the best of Offeror's knowledge that the following representations are accurate and complete.

a. That the Offeror and its principals are not presently debarred, suspended, proposed for debarment, declared ineligible, or voluntary excluded from contracts (covered transactions) by any Federal department or agency.

b. That the Offeror and its principals have not within a 3-year period preceding this offer been convicted of or had a civil judgment rendered against them for commission of fraud or a criminal offense in connection with obtaining, attempting to obtain, or performing a public (Federal, State, or local) transaction or contract under a public transaction; violation of Federal or State anti-trust statutes or commission of embezzlement, theft, forgery, bribery, falsification or destruction of records, making false statements, or receiving stolen property.

c. That the Offeror and its principals are not presently indicted for or otherwise criminally or civilly charged by a governmental entity (Federal, State, or local) with commission of any of the offenses enumerated in paragraph b of this certification.

d. That the Offeror and its principals have not within a 3-year period preceding this offer had one or more public transactions (Federal, State, or local) terminated for breach or default of a contract.

Offerors that cannot certify this block, in whole or in part, shall submit an explanation with their offer. (See instruction 13.)

16b. OFFEROR INFORMATION REQUIREMENTS: Subject to the penalties prescribed in 18 USC 1001, Offeror certifies, by signing this offer form, that to the best of Offeror's knowledge that the following information is accurate.

a. That the Offeror [ ] has, [ ] has not participated in a previous contract subject to the provision of section 202 of Executive Order 11246 (Non-discrimination in Employment) of 9/24/65, as amended; and that the Offeror [ ] has, [ ] has not submitted required compliance reports under such previous contracts.

b. That the Offeror together with its affiliates employs the following number of persons and is classified as:
[ ] 1-25 [ ] 26-500 [ ] Over 500 **and** a: [ ] Manufacturer [ ] Nonmanufacturer of sawtimber.

17. CERTIFICATE OF INDEPENDENT PRICE DETERMINATION: Subject to the penalties prescribed in 18 USC 1001, Offeror certifies and represents, by signing this offer form, that the following representations are accurate and complete:

a. By submission of this offer each offeror also certifies, and in the case of a joint offer each party thereto certifies as to its own organization, that in connection with this contract:
(i) The prices in this offer have been arrived at independently, without consultation, communication, or agreement, as to any matter relating to such prices with any other Offeror or with any potential competitor;
(ii) The prices which have been quoted in this offer have not been knowingly disclosed by the Offeror and will not knowingly be disclosed by the Offeror prior to opening of offer, directly or indirectly to any other Offeror or to any potential competitor; and
(iii) No attempt has been made or will be made by the Offeror to induce any other person or firm to submit or not to submit an offer.

b. Each person signing this offer or proposal certifies that:
(i) The Signer is the person in the Offeror's organization responsible within that organization for the decision as to the prices offered herein and that the Signer has not participated, and will not participate, in any action contrary to paragraphs a(i) through a(iii); or
(ii) The Signer is not the person in the Offeror's organization responsible within that organization for the decision as to prices offered herein but that the Signer has been authorized in writing to act as agent for the persons responsible for such decision in certifying that such persons have not participated, and will not participate, in any action contrary to paragraphs a(i) through a(iii), and as their agent does hereby so certify; and that the Signer has not participated, and will not participate, in any action contrary to paragraphs a(i) through a(iii).

c. An offer will not be considered for award where any portion of paragraph a or b has been deleted or modified. Where these provisions have been deleted or modified, the offer will not be considered for award unless Offeror furnishes with the offer a sworn statement which sets forth in detail the circumstances of the disclosure and the Chief, Forest Service, or the Chief's designee, determines that such disclosure was not made for the purpose of restricting competition.

18. ROAD CONSTRUCTION OPTION:
Not applicable.

19. CONTRACT AND BOND: The Offeror whose offer is accepted will, within 30 days of the award letter's date, or any written extension thereof by the Forest Service, execute a stewardship contract which shall be provided by the Forest Service and be based on the sample contract referenced in the prospectus. Simultaneously, Offeror shall furnish a satisfactory performance bond, in accordance with the provisions of such stewardship contract, in the penal sum as prescribed in the prospectus for this contract, and otherwise complete the process described on this form and pages attached hereto. Offeror agrees that its failure to comply with this paragraph shall result in a termination of this contract for breach under provisions of instruction 6 of the Instructions to Offeror's portion of this form.

20. FIRM OFFER: Subject to the penalties prescribed in 18 USC 1001, the Offeror hereby agrees not to withdraw this offer after the time for receipt of offers. Signing this offer form binds the Offeror to accept award under the terms of the sample contract, this offer form, and any accepted terms from Offeror's proposal, if its offer is accepted within 90 days after time for receipt of offers. The period for acceptance may be extended by written notice from Offeror. If Offeror qualifies as a small business and elects road construction by the Forest Service, then the Offeror agrees that its offer shall remain open through the period stated in the prospectus although that period may exceed 90 days.
If this solicitation is amended, all terms and conditions that are not amended remain unchanged. Offerors shall acknowledge receipt of any amendment to this solicitation by the date and time specified in the amendment(s). Offerors may submit modifications to their proposals at any time before the time for receipt of offers.

21. TERMS OF OFFER: Offeror certifies and represents that the Offeror has read and understands each and every provision of this offer form (together with any attachments thereto) and the sample contract. The Offeror agrees that it assumes the responsibility to clarify any questions before signing this form. The Offeror agrees that the written provisions of this offer form (together with any attachments), the sample contract, and any accepted terms from Offeror's proposal constitute the entire agreement of the parties until a written contract is executed and neither the offer form (and any attachments), the Offeror's proposal, nor the sample contract can be orally modified. The Offeror expressly adopts the terms of this offer form, the Offeror's proposal, and the sample contract as material parts of the Offeror's offer.

22. DISCLAIMER OF ESTIMATES AND OFFEROR'S WARRANTY OF INSPECTION: Before submitting this offer, the Offeror is advised and cautioned to inspect the contract area, review the requirements of the sample contract, and take other steps as may be reasonably necessary to ascertain the location, estimated quantities, construction requirements and estimates, and operating costs of the offered timber or forest products and stewardship projects. Failure to do so will not relieve the Offeror from responsibility for completing the contract.

The Offeror warrants that this offer is submitted solely on the basis of its examination and inspection of the quality and quantity of the timber or forest products offered for sale and operating costs of stewardship projects to be performed and is based solely on its opinion of the value thereof and its costs of recovery, without any reliance on Forest Service estimates. Offeror further acknowledges that the Forest Service: (a) expressly disclaims any warranty of fitness of timber or forest products for any purpose; (b) offers this timber or forest products, as is, without any warranty of quality (merchantability) or quantity, and (c) expressly disclaims any warranty as to the quantity or quality of timber or forest products sold, except as may be expressly warranted in the sample contract.

The Offeror further holds the Forest Service harmless for any error, mistake, or negligence regarding estimates, except as expressly warranted against in the sample contract.

23. CERTIFICATION OF COMPLIANCE WITH EXPORT AND SUBSTITUTION RESTRICTIONS:
The Offeror certifies, by signing this offer form, that the Offeror is in compliance with applicable prohibitions against export and substitution prescribed in the Forest Resources Conservation and Shortage Relief Act of 1990, as amended (16 USC 620, et seq.). In Alaska, exports of logs, cordwood, or primary products derived from included timber may not be transported from Alaska without Regional Forester approval. (See instruction 12.)

24. CERTIFICATION OF NON-AFFILIATION:
Not applicable.

25. CERTIFICATION OF AFFILIATION: The Offeror certifies that a complete listing of Offeror's affiliates who are primarily engaged in the logging of forest products is included with this offer. (Add additional pages if needed. See instructions 6 and 11.):

Full Name of All Partners & Affiliates (Type or Print)	When requested by the Contracting Officer, Offeror agrees to furnish the tax identification number of each partner and affiliate listed herein.

Before signing this offer, review the attached instructions to Offerors and fill in the applicable blanks in boxes 14g, 14l, 15e, 15f, 16b, 18, 25 and 26.

Name of Offeror: (Type or Print)	By: (Signature in ink)	
	Title: (Type or Print)	Date:

Business Name (Type or Print)

Public reporting burden for this collection is estimated to be between 24 and 60 hours per response, including time for reviewing instructions, searching existing data sources, gathering and maintaining the data needed, and completing and reviewing the collection of information. Under the Paperwork Reduction Act of 1995, an agency shall not conduct or sponsor, and no persons are required to respond to, a collection of information unless it displays a valid OMB control number. The valid OMB control number for this collection of information is 0596-0066.

26. PERSONAL IDENTIFICATION INFORMATION:
Business Name, Address and Phone Number (Include Zip Code and Area Code) (Type or Print)

Tax Identification Number: _____

Instructions to Forest Officer: Remove and shred this page after entering offeror's PII in the appropriate database.

INSTRUCTIONS TO OFFERORS

1. OFFEROR'S QUALIFICATIONS: Before an offer is considered for award, the Offeror may be required to submit a technical and price proposal, as described in instruction 2 and comply with all other provisions stated herein. The proposal should be practical and be prepared simply and economically, providing a straightforward, concise delineation of what it is the Offeror will do to satisfy the requirements of the contract. Upon contract award, this technical proposal will become a binding part of this contract.

2. PREPARATION OF PROPOSALS: Offers shall be manually signed, prices entered in block 14(g) for timber values and blocks 15(e) and 15(f) for the cost stewardship projects and all fill-in blocks, 16b, 18, 25, and 26 completed. The offer rates in column 14g for each species must be equal to or greater than the advertised rate for each species in column 14f. If erasures or other changes appear on the forms, the person signing the offer must initial each erasure or change.

Proposal Requirements. Proposals shall be submitted in two parts: a technical proposal and a price proposal.

a. Technical Proposal Instructions. The technical proposal will be used to make an evaluation and arrive at a determination as to whether the proposal will meet the requirements of the Government. Therefore, the technical proposal must present sufficient information to reflect a thorough understanding of the requirements and a detailed description of the techniques, procedures, and program for achieving the objectives of the specifications/statement of work. Proposals which merely paraphrase the requirements of the Government's specifications/statement of work, or use phrases such as "will comply" or "standard techniques will be employed" will be considered unacceptable and will not be further considered. Technical proposals will be evaluated and ranked on the basis of the following criteria. As a minimum, the proposal must clearly provide the following:

(i) Technical Approach

l. Describe your plan of operations for both timber harvest and stewardship project work. Include a timeline and the rationale for the work activities identified to ensure all contractual requirements will be completed by the termination date.

ll. Describe your quality control plan for both the harvesting and stewardship projects.

lll. Provide names and resumes for your contract manager and your on-the-ground supervisor(s).

lV. Describe the equipment you propose to use to accomplish this contract, including both harvest and stewardship projects.

V. Define your production capability to accomplish this contract within the contract period.

VI. Describe methods and plans to protect resources, maximize utilization of harvested material including both sawtimber and nonsawtimber, and to minimize the number of entries into stands to be treated.

(ii) Capability and Past Performance

l. Provide a list of the experience of your key personnel who will actually be working on this contract.

ll. Identify all subcontractors you propose to use for this contract and the work activities planned for subcontracting. Describe subcontractor's past performance using the criteria identified in (ii)lll. If any subcontractors are certified in their area of expertise, provide information as to when, what, and by whom they are certified.

lll. Submit a list of similar or related contracts that your firm has completed in the past 3 years. This listing must include the contract type; contract amount or contract size; location, the year completed, the Agency, company or individual contracted with, and a current telephone number.

(iii) Utilization of Local Work Force. Local labor is defined as Ashland, Bayfield, Florence, Forest, Langlade, Octono, Oneida, Price, Sawyer, Taylor, & Vilas counties.. Identify how you intend to utilize labor, subcontractors, and other workforce from the local area. Additional evaluation preference will be given for the use of labor or subcontractors located closest to the contract area.

b. Price Proposal. All Offerors must furnish offer prices in each block of the 'Offer Rate' column (block 14g) for all material subject to offering in the mandatory timber cutting units. If offer prices are entered for the optional timber cutting units, Offerors must furnish offer prices in each block of the 'Offer Rate' column (block 14g) for all material subject to offering, and timber removal will be required. In addition, Offerors must enter a rate per unit in Block 15(e) and a total offer in Block 15(f) for both the mandatory and optional stewardship projects.

3. SUBMISSION OF OFFERS: Offers must be submitted to the Contracting Officer, designated by the solicitation as the receiving officer, at or prior to the time for receipt of offers. Such offers must be enclosed in a sealed envelope addressed to the designated receiving officer. The envelope should show on the outside (a) that it is a "Best Value Offer," and (b) the contract name or number, and the date and time of offer closing, as shown by the offer form. Offers received after the time specified on the offer form are late offers. Forest Service Handbook 2409.18, Chapter 60 will govern acceptance of such offers.

4. OPENING OF OFFERS: The competitive proposal does not allow for public opening of offers. The

Government may disclose the following information in post-award debriefings to other Offerors: (a) the overall evaluated price and technical rating of the successful Offeror; (b) the overall ranking of all Offerors, when any ranking was developed by the Agency during source selection, (c) a summary of the rationale for award, and (d) for acquisitions of commercial items, the make and model of the item to be delivered by the successful Offeror.

5. EVALUATION OF PROPOSALS AND AWARD OF CONTRACT: One award will be made to the Offeror (a) whose proposal is technically acceptable and (b) whose technical/price relationship is the most advantageous to the Government. All technical evaluation factors including those listed in section 2a(i)-(iii) of these instructions and any additional factors listed in the prospectus when combined, are approximately equal to cost or price. The critical factor in making any technical/price trade-off is not the spread between the technical ratings, but rather the significance of that difference. The significance of the spread in ratings will be determined on the basis of what that difference might mean in terms of performance and what it would cost the Government to take advantage of it. Where technical proposals are determined to be substantially equal, any cost/price advantage to the Government may control award.

Proposals must be submitted initially on the most favorable terms from a technical and price standpoint which the Offeror can submit to the Government. Therefore, the Government reserves the right to award without discussions with the Offerors. However, after receipt of initial offers, written or oral discussions may be conducted with all responsible Offerors whose offers are determined to be in the competitive range. Discussions conducted after receipt of an offer do not constitute a rejection or counteroffer by the Government.

Firms lacking a past performance record (new firms or those with no relevant experience within their organization) will be treated as an unknown performance risk, and will receive a neutral rating in this criteria. A neutral rating will be established as the average of all other competing Offerors.

The selection official will base the award decision on a tradeoff between price and non-price factors, comparing the relative risk to the government of poor or non-performance posed by each of the offerors, and making a judgement as to whether or not reduced risk of performance is worth additional cost. In some cases this will result in award to a lower ranked but lower priced offer, in other cases award may be to a higher ranked but higher priced offer.

The Government may, when in its interest, reject any or all offers or waive any informality in offers received. A written award mailed (or otherwise furnished) to the successful Offeror shall be deemed to result in a binding contract without further action by either party.

If an appeal or lawsuit is filed challenging the decision to award this contract or upon determination by the Regional Forester that conditions existing on this stewardship contract are the same as, or nearly the same as, conditions existing on other contract(s) in appeal or litigation, Contracting Officer may delay award or reject all offers. If delay in award is for 10 days or more during Normal Operating Season after offer opening, Contracting Officer shall, upon award, adjust the contract term to include additional calendar days in one or more Normal Operating Seasons equal to the actual time lost.

6. DAMAGES: Offeror acknowledges that this contract shall be terminated for breach pursuant to blocks 16, 16a, 16b, 19, 20, 23, 24, 25,and/or 26 of this offer form if: (a) the Offeror fails to execute a stewardship contract, or furnish a satisfactory performance bond, within the number of days listed in block 19, of award letter's date; or (b) the Offeror is found to have violated the False Statements Act in making any statement or certification on this offer form, including not meeting contractor responsibility requirements. The Offeror acknowledges that the Offeror shall not be entitled to cure this breach and that it will pay damages pursuant to the following terms:

Damages due the United States shall be determined in the following manner: (a) The costs, as described in this instruction, incurred by Forest Service in contacting the other qualified offerors regarding accepting the award of the contract at the high Offeror's repudiated rate or (b) If another qualified offeror does not accept award of the contract at the high Offeror's repudiated rate:

(i) If the repudiated contract is reoffered within 6 months of the date of repudiation, damages shall be the difference between the total recontract value and the total value of Offeror's repudiated offer, plus costs described in this instruction or

(ii) If there are no responsive offers on the reoffered contract, damages shall be the difference between the reoffered appraised value and the total value of Offeror's repudiated offer, plus costs described in this instruction or

(iii) If the repudiated contract will not be reoffered or the reoffer is not made within 6 months of Offeror's repudiation, damages shall be the difference between the appraised value of this contract as of the date of Offeror's repudiation and the total value of Offeror's repudiated offer, plus the costs described in this instruction.

The costs to be included in damages are the costs the Government incurs in making the reoffer, including, but not limited to, salary costs, document preparation and duplication costs, mailing costs, and contract solicitation costs.

Damages will also include interest measured by interest at the Current Value of Funds Rate established by the Secretary of the Treasury. Interest will be calculated from the date of Offeror's repudiation to the date of award of the reoffered contract or to the date a determination is made not to reoffer the repudiated contract or for 6 months, whichever comes first.

7. PRIVACY ACT: All personal information is requested on a voluntary basis; however, if you do not

provide this personal information, your offer will not be accepted and the contract will not be awarded to you. Solicitation of this information is necessary for the Government to conduct its contracting program and thus is authorized under the National Forest Management Act of 1976, (16 USC 472a). The principle purpose for collecting this information is to allow for proper award of a stewardship contract and to provide for administration of that contract after award. Other routine uses of this data include: (a) compilation of small business data to determine needs for set-aside contracts, (b) determination of volume purchased in any specific time period by a single contractor, and (c) determination of volume under contract by a contractor.

8. ROAD COMPLETION DATE: The Offeror hereby acknowledges that the Offeror is aware of the road completion date in the sample contract. The Offeror also acknowledges that if the Offeror elects to have Forest Service construct specified roads, the Offeror is aware: (a) that the Forest Service expects to contract for road construction, (b) that the stewardship contract will not be awarded unless a satisfactory road construction bid is received and a road construction contract is awarded or, if the Forest Service fails to receive such a bid within a maximum period stated in the solicitation of the road contract, the Offeror agrees to perform road construction, (c) that the Forest Service may extend the maximum award delay time by the amount of time needed to confirm either contract or road Bidder's size status or by any time in excess of 40 days from offer opening needed to begin solicitation of construction bids, and (d) that if the Forest Service extends the maximum award delay period because solicitation of the road contract is delayed, the Offeror may withdraw its offer without penalty.

9. ELECTION OF ROAD OPTION AND CERTIFICATE OF SMALL BUSINESS STATUS: The National Forest Management Act of 1976 (16 USC 472h(i)) provides that the Secretary of Agriculture may permit offerors qualifying as small business concerns under the Small Business Act to elect, when submitting an offer, to have the Secretary build the specified roads. Offerors qualifying as a small business concern under the Small Business Act, as amended, and the regulations thereunder, may elect to have the Forest Service construct the Specified Roads required by this contract. The Offeror who does not elect agrees, if awarded the contract, to construct the roads in accordance with the contract. An Offeror who does elect acknowledges that Offeror is aware of and agrees to the conditions stated in instruction 8 and that the Offeror is a small business concern.

If you wish to elect Government construction, you must so indicate in block 18 on the offer form that you submit. You may not accept this election at a later time. If you do not elect Government construction on your original offer form and you receive contract award, you must construct needed specified roads. You must elect Government construction for all of the specified roads as a package. Election of Government construction of a portion of the roads constitutes a non-responsive offer. When you elect Government construction, you must certify your firm as a qualified small business concern and acknowledge your understanding that award of the contract cannot take place until the Forest Service ensures road construction.

Except in rare instances, and then only when indicated in the solicitation, the Forest Service must rely upon independent contractors to construct the roads when you request Government construction. The Forest Service shall make a good-faith effort to let a contract for the construction. Without receipt of a satisfactory bid under Federal Procurement Regulations, the Forest Service can only award the stewardship contract to you if you agree to perform the construction. This problem does not arise often, but you should consider the possibility when deciding upon your election.

The Act also requires that when the Offeror elects to have the Secretary build the roads, the price paid for the timber must include all of the estimated construction costs of the roads. The Offeror must pay the total cost of the road, regardless of the amount that the offer value exceeds base rate value. This means that you may be billed at a rate higher than the offer rate.

10. ELECTION OF ROAD OPTION: Not applicable.

11. DEFINITIONS:

Affiliates: Business concerns or individuals are affiliates of each other if, directly or indirectly, (a) either one controls or has the power to control the other; or (b) a third party controls or has the power to control both.

Offeror: An Offeror is any individual, organization, or other legal entity that submits an offer for, or may be expected to submit an offer for, a National Forest System contract.

Covered Transactions: Covered transactions include both non-procurement and procurement transactions. The primary tier is between a Federal Agency and a person. A lower tier transaction is between a participant in a covered transaction and another person. A procurement contract is a covered transaction if it is awarded to a participant in a non-procurement transaction and the amount of the contract is greater than $25,000.

Manufacturer: A concern with an existing sawmill, specialty mill (such as a cedar mill, shingle or shake plant, pole plant, or deadwood stud mill), veneer mill, or other manufacturing facility within an economic or logical haul distance, or with firm commitments and permits for construction of such facility. The purpose of this facility is processing the sawtimber component of timber sales.

Nonmanufacturer:

a. Any concern which manufactures, with its own or leased facilities, or contracts for manufacture less than 50

percent of its total annual sawlog production within an economic or logical haul distance to such facilities, including pulp and fiberboard mills without a contiguous integrated manufacturing facility for lumber, timbers, or veneer from a sawtimber component.

b. A specialty concern that does not have the capacity to manufacture 50 percent or more of its average annual sawlog production because of factors such as timber species or size.

c. Any concern purchasing National Forest timber outside an economic and logical haul distance to its manufacturing facility.

d. Any pulp mill, fiberboard mill, or chip plant that purchases sales with a sawtimber component when it has no manufacturing facility for lumber, timbers, or veneer.

Participant: Any person who submits a proposal for, enters into, or reasonably may be expected to enter into a covered transaction. This term also indicates any person who acts on behalf of or is authorized to commit a participant in a covered transaction as an agent or representative of another participant.

Contract Officer: An individual delegated responsibility for any specific aspect or task in the offering or awarding process for contracts.

Small Business: In contracts of National Forest timber a small business is a concern that: (a) is primarily engaged in the logging and forest products industry; (b) is independently owned and operated; (c) is not dominant in its field of operation; and (d) together with its affiliates does not employ more than 500 persons.

12. CERTIFICATION OF COMPLIANCE WITH EXPORT RESTRICTIONS: Certain restrictions on the purchase and export of unprocessed logs cut from National Forest timber apply in various parts of the country. Pursuant to the Forest Resources Conservation and Shortage Relief Act of 1990, as amended (16 USC 620, et seq.), the Offeror acknowledges that the Offeror is aware of the applicable export restrictions. The Offeror is aware that these restrictions affect the disposition of the included timber and is aware that the restrictions may reduce the potential value of the timber.

13. CERTIFICATION REGARDING DEBARMENT, SUSPENSION, PROPOSED DEBARMENT, AND OTHER RESPONSIBILITY MATTERS-CONTRACT TRANSACTIONS: The inability of a person to provide the certifications in block 16a will not necessarily result in denial of participation in this contract (covered transaction). The Offeror shall submit an explanation of why it cannot provide the certification. The certification or explanation will be considered in connection with the Forest Service's determination whether to enter into this contract. However, failure of the Offeror to furnish a certification or an explanation shall disqualify such person from participation in this contract.

The certification is a material representation of fact upon which reliance was placed when the Forest Service determined to enter into this contract. If it is later determined that the Offeror knowingly rendered an erroneous certification, in addition to other remedies available to the Federal Government, the Forest Service may terminate this contract for cause or default.

The Offeror shall provide immediate written notice to the Forest Service officer, to whom this offer is submitted, if at any time the Offeror learns that its certification was erroneous when submitted or has become erroneous by reason of changed circumstances.

The terms 'covered transaction,' 'debarred,' 'suspended,' 'ineligible,' 'lower tier covered transaction,' 'participant,' 'person,' 'primary covered transaction,' 'principal,' 'proposal,' and 'voluntarily excluded,' as used in this clause, have the meanings set out in the Definitions and Coverage sections of the rules implementing Executive Order 12549. You may contact the Forest Service for assistance in obtaining a copy of those regulations.

The Offeror agrees by submitting this offer that, should the proposed contract transaction be entered into, it shall not knowingly enter into any subcontractor transaction (lower tier covered transaction) with a person who is proposed for debarment under 48 CFR 9.4, or who is debarred, suspended, declared ineligible, or voluntarily excluded under 48 CFR 9.4, or under 2 CFR 180 or 417 from participation in this contract, unless authorized by the Forest Service's non-procurement Debarring and Suspending Official.

The Offeror further agrees by submitting this offer that it will provide the addendum titled 'Subcontractor Certification Regarding Debarment, Suspension, Ineligibility, and Voluntary Exclusion,' without modification, to all subcontractors and in all solicitations for subcontractors.

14. SUBCONTRACTOR CERTIFICATION REGARDING DEBARMENT, SUSPENSION, INELIGIBILITY, AND VOLUNTARY EXCLUSION: Pursuant to 2 CFR 180.335 each contractor shall require subcontractors to include a certification for it and its principals in any proposal submitted in connection with this contract. Contractors shall keep the certifications on file until the termination date of the contract.

A participant in a contract may rely upon a certification of a prospective subcontractor that it is not proposed for debarment under 48 CFR 9.4, or is not debarred, suspended, ineligible, or voluntarily excluded under 48 CFR 9.4, or under 2 CFR 180 or 417 from the contract, unless it knows that the certification is erroneous. A contractor may decide the method and frequency by which it determines the eligibility of its principals. Each contractor may, but is not required to, check for those listed as Excluded in the System for Award Management.

Nothing contained in the foregoing shall be construed to require establishment of a system of records in order to render in good faith the certification required by this provision. The knowledge and information of a contractor is not required

to exceed that which is normally possessed by a prudent person in the ordinary course of business dealings.

Except for transactions authorized in paragraph 5 of the instructions for certification, if a contractor knowingly enters into a subcontractor transaction with a person who is proposed for debarment under 48 CFR 9.4, or who is suspended, debarred, ineligible, or voluntarily excluded under 48 CFR 9.4, or under 2 CFR 180 or 417 from participation in this contract, in addition to other remedies available to the Federal Government, the Forest Service may terminate this contract for cause or default and/or pursue suspension and/or debarment. The instructions and certification follow:

INSTRUCTIONS FOR:
Subcontractor Certification
Regarding Debarment, Suspension, Ineligibility, and Voluntary Exclusion

1. By signing and submitting this proposal, the prospective subcontractor (lower tier participant) is providing the certification set out below.

2. The certification is a material representation of fact upon which reliance was placed when this transaction was entered into. If it is later determined that the prospective subcontractor knowingly rendered an erroneous certification, in addition to other remedies available to the Federal Government, the Forest Service, with which this transaction originated, may pursue available remedies, including suspension and/or debarment.

3. The prospective subcontractor shall provide immediate written notice to the person to whom this proposal is submitted if at any time the prospective subcontractor learns that its certification was erroneous when submitted or has become erroneous by reason of changed circumstances.

4. The terms 'covered transaction,' 'debarred,' 'suspended,' 'ineligible,' 'lower tier covered transaction,' 'participant,' 'person,' 'primary covered transaction,' 'principal,' 'proposal,' and 'voluntarily excluded,' as used in this clause, have the meanings set out in the Definitions and Coverage sections of the rules implementing Executive Order 12549. You may contact the Forest Service for assistance in obtaining a copy of those regulations.

5. The subcontractor agrees by submitting this certification that, should the proposed subcontract be entered into, it shall not knowingly enter into any other subcontract with a person who is proposed for debarment under 48 CFR 9.4, or who is debarred, suspended, declared ineligible, or voluntarily excluded under 48 CFR 9.4, or under 2 CFR 180 or 417 from participation in this contract, unless authorized by the Forest Service.

6. The subcontractor further agrees by submitting this certification that it will include this certification titled 'Subcontractor Certification Regarding Debarment, Suspension, Ineligibility, and Voluntary Exclusion,' without modification, and instructions in all subcontracts and in all solicitations for its subcontracts.

Subcontractor Certification
Regarding Debarment, Suspension, Ineligiblity, and Voluntary Exclusion

Contract Name: Foulds Springs Stewardship

National Forest: Chequamegon/Nicolet

The prospective subcontractor (participants in lower tier covered transactions) certifies, by submission of this proposal, that neither it nor its principals is presently debarred, suspended, proposed for debarment, declared ineligible, or voluntarily excluded from participation in this contract by any Federal department or agency.

Where the prospective subcontractor is unable to certify to any of the statements in this certification, such prospective subcontractor shall attach an explanation to this proposal.

Name of Subcontractor: _____

Business Address: _____
_____
_____

_____ _____
Date Signature

Attachment to Bid Form

TECHNICAL PROPOSAL – Fill out and attach to your Bid For Integrated Resource Contract
Instructions: See Item No. 11, remarks, if extra space is needed to answer any item below. Mark X in the appropriate boxes.

1. Contractors Name, Address & Telephone No. email address: _____	2. Type of Business __Corporation __ Partnership __ Individual __ Non-Profit __ Limited Liability Company

A. Technical Approach and Contract Management:

a. Describe your plan of operation for the timber removal, including a timeline and the rationale for work activities to ensure all contractual work will be completed by the termination date.

b. Describe your plan of operation for the stewardship project work, including a timeline and the rationale for work activities to ensure all contractual work will be completed by the termination date.

c. Describe your quality control plan for timber removal.

d. Describe your quality control plan for the stewardship work.

e. List the equipment you propose to use to accomplish the timber harvest.

f. List the equipment you propose to use to accomplish the stewardship work.

.

g. What is your production capability to accomplish the timber harvest on this contract.

h. What is your production capability to accomplish the stewardship work on this contract.

B. Capability and Past Performance. List the relevant current/past projects for your business in the last 3 years.

a. No. of employees: _____ .b. Are employees regularly on your payroll: ___yes ___no

c. The name, present position and years of experience of your contract manager and on-the-ground supervisor.

d. Names, present positions and years of experience of your subcontractor's.

e. Project (Location): _____

Contract Amount $_____ Period of Performance_____

Description of Services (i.e. type of road, length of road, equipment used, tasks performed, trades involved)

_____

_____

_____

Name, Address & Telephone Number for Point of Contact for Information:

_____

_____

_____

f. Project (Location): _____

Contract Amount $_____ Period of Performance_____

Description of Services (i.e. type of road, length of road, equipment used, tasks performed, trades involved)

_____

_____

_____

Name, Address & Telephone Number for Point of Contact for Information:

_____

_____

_____

Attachment to Bid Form

g. Project (Location): _____

Contract Amount $_____ Period of Performance_____

Description of Services (i.e. type of road, length of road, equipment used, tasks performed, trades involved)

_____

_____

_____

Name, Address & Telephone Number for Point of Contact for Information:

_____

_____

_____

Have you ever failed to complete any work awarded to you?___yes ___no

If "yes" to the question above, specify location(s) and reason(s) why

C. Utilization of Local Workforce. Geographical Proximity

The contractor's main office or branch office is located _____ miles from project area.

Contractor and Subcontractors listed above live in the following counties:

11. REMARKS: **(PLEASE NOTE ADDITIONAL SHEETS MAY BE ATTACEHD TO SUPPLEMENT THIS FORM)**

CERTIFICATION: I certify that all of the statements made by me are complete and correct to the best of my knowledge and that any persons named as references are authorized to furnish the Forest Service with any information needed to verify my capability to perform this project:

Name:	Title:	Date:

This form is available electronically.

Form Approved – OMB No. 0505-0025
Expiration Date: 02/29/2016

AD-3030-FS

U.S. DEPARTMENT OF AGRICULTURE

REPRESENTATIONS REGARDING FELONY CONVICTION AND TAX DELINQUENT STATUS FOR CORPORATE APPLICANTS

Note: You only need to complete this form if you are a corporation. A corporation is any entity that has filed articles of incorporation in one of the 50 States, the District of Columbia, or the various territories of the United States including American Samoa, Federated States of Micronesia, Guam, Midway Islands, Northern Mariana Islands, Puerto Rico, Republic of Palau, Republic of the Marshall Islands, or the U.S. Virgin Islands. Corporations include both for profit and non-profit entities.

The following statement is made in accordance with the Privacy Act of 1974 (5 U.S.C. 552(a), as amended). The authority for requesting the following information is sections 433 and 434 of the Consolidated Appropriations Act, 2012, P.L. 112-74, and subsequent similar provisions. The information will be used to confirm applicant status concerning entity conviction of a felony criminal violation, and/or unpaid Federal tax liability status.

According to the Paperwork Reduction Act of 1985 an agency may not conduct or sponsor, and a person is not required to respond to a collection of information unless it displays a valid OMB control number. The valid OMB control number for this information collection is 0505-0025. The time required to complete this information collection is estimated to average 15 minutes per response, including the time for reviewing instructions, searching existing data sources, gathering and maintaining the data needed, and completing and reviewing the collection of information.

1. APPLICANT'S NAME	2. APPLICANT'S ADDRESS *(Including Zip Code)*	3. TAX ID NO. *(Last 4 digits)*

4A. Has the Applicant been convicted of a felony criminal violation under Federal law in the 24 months preceding the date of application? ☐ YES ☐ NO

4B. Has any officer or agent of Applicant been convicted of a felony criminal violation for actions taken on behalf of Applicant under Federal law in the 24 months preceding the date of application? ☐ YES ☐ NO

4C. Does the Applicant have any unpaid Federal tax liability that has been assessed, for which all judicial and administrative remedies have been exhausted or have lapsed, and that is not being paid in a timely manner pursuant to an agreement with the authority responsible for collecting the tax liability? ☐ YES ☐ NO

Providing the requested information is voluntary. However, failure to furnish the requested information will make the applicant ineligible to enter into a contract, memorandum of understanding, grant, loan, loan guarantee, or cooperative agreement with USDA.

PART B – SIGNATURE

5A. APPLICANT'S SIGNATURE (BY)	5B. TITLE/RELATIONSHIP OF THE INDIVIDUAL IF SIGNING IN A REPRESENTATIVE CAPACITY	5C. DATE SIGNED *(MM-DD-YYYY)*

The U.S. Department of Agriculture (USDA) prohibits discrimination in all of its programs and activities on the basis of race, color, national origin, age, disability, and where applicable, sex, marital status, familial status, parental status, religion, sexual orientation, political beliefs, genetic information, reprisal, or because all or part of an individual's income is derived from any public assistance program. (Not all prohibited bases apply to all programs.) Persons with disabilities who require alternative means for communication of program information (Braille, large print, audiotape, etc.) should contact USDA's TARGET Center at (202) 720-2600 (voice and TDD). To file a complaint of discrimination, write to USDA, Assistant Secretary for Civil Rights, Office of the Assistant Secretary for Civil Rights, 1400 Independence Avenue, S.W., Stop 9410, Washington, DC 20250-9410, or call toll-free at (866) 632-9992 (English) or (800) 877-8339 (TDD) or (866) 377-8642 (English Federal-relay) or (800) 845-6136 (Spanish Federal-relay). USDA is an equal opportunity provider and employer.