ATTACHMENT 1 – DESCRIPTION/SPECIFICATIONS/STATEMENT OF WORK

1.1 Description of Work

1.1.1 This specification covers stormproofing and closing of existing roads. Work includes but is not limited to, installation of water bars and/or cross ditch, installation of drain dips, removal of culverts, installation of closure devices, installation of closure signs.

1.1.2 Closure of roads listed in the schedule shall include installation of waterbars and/or cross ditch, installation of closure devices as specified under 3.1 Storm Proofing and installation of signage as specified.

1.2 Environmental Considerations

1.2.1 Water Quality: All ground soil disturbing operations are to be conducted during periods of dry weather. Generally, this period would be June1 through October 15; however, these dates will vary depending on weather patterns. All in-stream work shall be conducted during periods of low stream flow, generally between July 15 and August 15 and in accordance with ODFW in-stream work timing guidelines, unless otherwise designated in the road listing.

1.2.2 Any maintenance work and refueling of equipment shall be done outside the stream channel. Equipment shall be reasonably clean of dirt and grease prior to operations on Government Lands. Should any gas or oil leakage occur while working in the stream, Contractor shall immediately remove the equipment from the stream and any contaminants shall be promptly cleaned up by the Contractor to DEQ standards.

1.3 Seasonal Restrictions for Threatened & Endangered (T&E) Species
Some work may have seasonal restrictions on operations due to threatened and endangered species. Specific project areas affected will be identified on each work listing.

SECTION 2
DEFINITIONS

Wherever in these specifications, or in other contract documents, the following terms, or pronouns in place of them, are used, the intent and meaning shall be interpreted as follows:

Agreed or Approved - Official agreement or approval by use of a written document issued by the Government. Agreements also require signature of Service Provider's Representative and are dated.

Berm Barricades – An earthen embankment structure that may or may not incorporate woody debris succeeded by a shallow trench used to discourage vehicular access.

Catch Basin - The area immediately adjacent to inlet invert of the culvert.

Cross Ditch – A long narrow trench or furrow dug in the ground excavated diagonally in the road prism to divert water off the road onto well vegetated forest floor to prevent erosion.

Culvert - Any structure that provides a passageway, drain, or waterway under a road or embankment.

Ditch - A relatively long narrow excavation placed to collect or disperse water.

Drainage ditch - A ditch located parallel to and abutting the roadbed.

Equipment - All machinery, operating supplies and tools necessary for the proper performance and acceptable completion of the work.

Highway Vehicles - Vehicles such as, passenger cars and high clearance vehicles.

Materials - Any substances specified for use in the performance of the work.

Measurement - The process of identifying the dimensions, quantity, or capacity of an item.

Right-of-Way - A general term denoting (1) the privilege to pass over land in some particular line (including easement, lease, permit, or license to occupy, use, or traverse public or private Lands), or (2) real property necessary for the project, including roadway, buffer areas, access, and drainage areas.

Road Listing - A preliminary listing of road locations and any established work priorities.

Road Prism – Area from the road shoulder through the ditch line, including turnouts and widths outside the travel way.

Shoulder - The portion of the roadway contiguous to the traveled way for accommodation of stopped vehicles, emergency use, and lateral support of travel way structure.

Travel Ways - The portion of the roadway designated for the movement of vehicles, exclusive of shoulders but including turnouts and curve widening.

Typical - Illustrations showing details of required work.

Unit of Measure - The unit and fractions of units shown in the Schedule of Items.

Water Bar – An earthen structure excavated diagonally in the road prism to divert water off the road onto well vegetated forest floor to prevent erosion.

SECTION 3
PERFORMANCE WORK STATEMENT TASKS AND CRITICAL SUBTASKS

3.1 Storm Proofing

3.1.1 Contractor shall storm proof designated roads by installing water bars/cross ditches or drain dips at locations flagged in the field, listed on road listing, or at intervals as designated on the Typical Drawing. The Government may increase or decrease the spacing intervals so as to fit specific road conditions.

3.1.2 Cross ditches (Utah Dip)/waterbars shall be constructed so as to channel water away from existing ditch lines and across the road surface to the outside of the road shoulder. Cross ditches (Utah Dip)/waterbars shall be self-maintaining. Cross ditches (Utah Dip)/waterbars shall be constructed in accordance with Typical Drawing 839-10A.

3.1.3 Unless otherwise designated, Cross ditches shall be placed at 400 foot intervals on grades ranging from 0% – 5%, and 200 foot intervals on grades 6% or greater, or as field conditions allow and with the following exceptions:

a. The 200 foot interval may be reduced by up to 75 feet if placement will facilitate providing a water bar down grade of a functioning culvert that is not designated for removal.

b. The 200 foot interval may be extended or reduced by up to 75 feet in order to discharge water over a less erodible surface. For example, placement of water bars to discharge water over a rock fill rather than an unvegetated soil fill.

3.1.4 All culvert inlets and catch basins shall be cleaned of material that interferes with water flow on culverts not designated for removal. No clean out is required for those culverts that are not functioning due to damage or due to being completely plugged more than two feet from the inlet.

3.2 Road Closure by Berms and Slash Installation

3.2.1. The Contractor shall place berm barricades to completely close off designated roads to vehicle traffic. The barricades shall be placed at locations flagged in the field, or listed on the road listing as shown on Typical 839A-5B.

3.2.2 Slash shall be placed on the closed side of the berm in accordance with drawings 839A-16A or 839A-16B.

3.2.3 Berm barricade trenches shall be constructed to allow water drainage away from streams and erodible surfaces.

3.2.4 Install government furnished road restriction carsonite post at each road closure. The road restriction carsonite post can be mounted on a tree (preferred method). If post in installed on a tree, the tree shall be limbed of branches for a height of 6'. Carsonite post shall be installed 25' to 100' from the intersection and 2' to 8' from edge of road. Post shall be installed by using 2 lag screws ¼" x 3" to ¼" x 4" in length, one lag screw installed 8" from the top and one lag screw installed 8" from the bottom. If a tree is not available, carsonite posts shall be imbedded in the ground 18" to 24" in depth. Carsonite post shall be installed 25' to 100' from the intersection and 2' to 8' from edge of road. All government furnished carsonite post shall be installed on the right side of road only.

3.3 Road Closure Gate Installation

3.3.1. Gate locations shall be flagged on the ground by the CO.

3.3.2 Install gates in accordance with drawing 839-15A as specified in the road listing.

3.4 Payment

3.4.1 Payment will be made following satisfactory completion of task order at the unit rate as listed on each task order.

3.4.2 Road Closures - Payment will be made by each price shown on the task order and will include all stormproofing, signage and closure devices required on each road.

EARTH BARRIER TYPICAL 839-5B

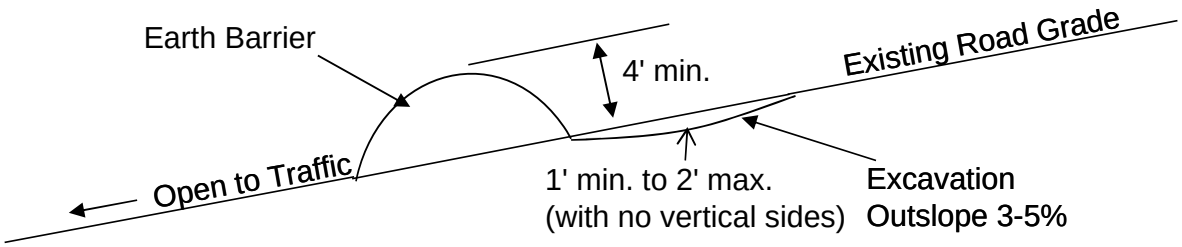

ISOMETRIC VIEW

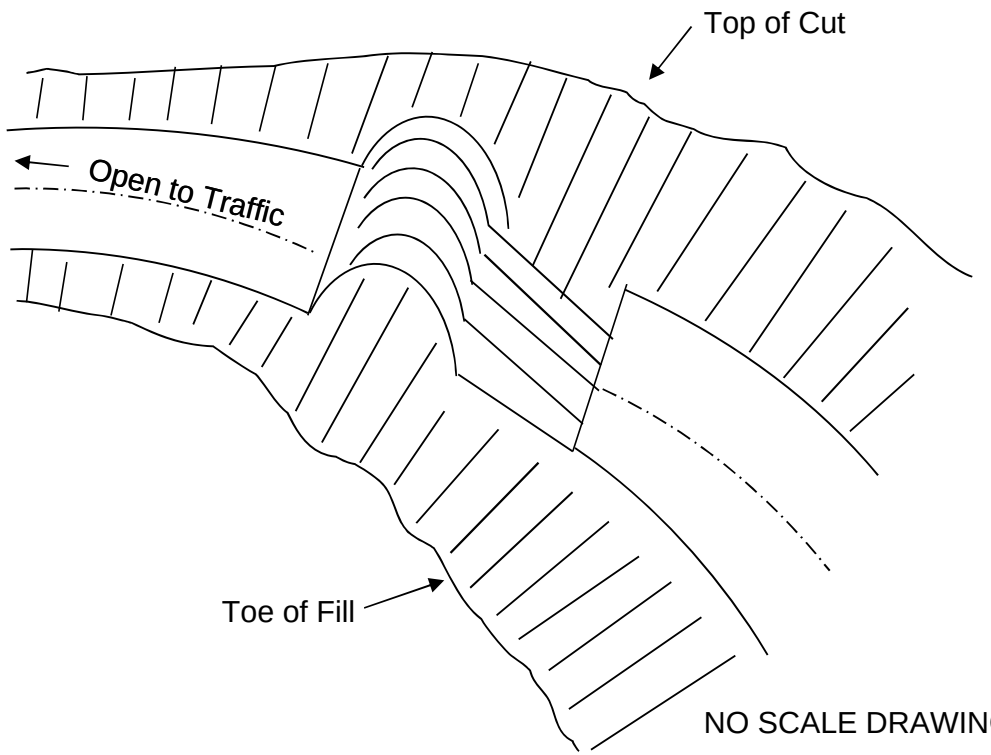

NO SCALE DRAWING

Note:

Location of earth barrier shall be staked on the ground by the Forest Service.

Boulders may be incorporated in the earth barrier. Earth barriers shall be constructed to a minumum height of 4' across roadway. Excavation area from existing roadbed shall be sloped at a minumum of 3 horizontal to 1 vertical.

CROSS DITCH (UTAH DIP) TYPICAL

839-10A

SECTION

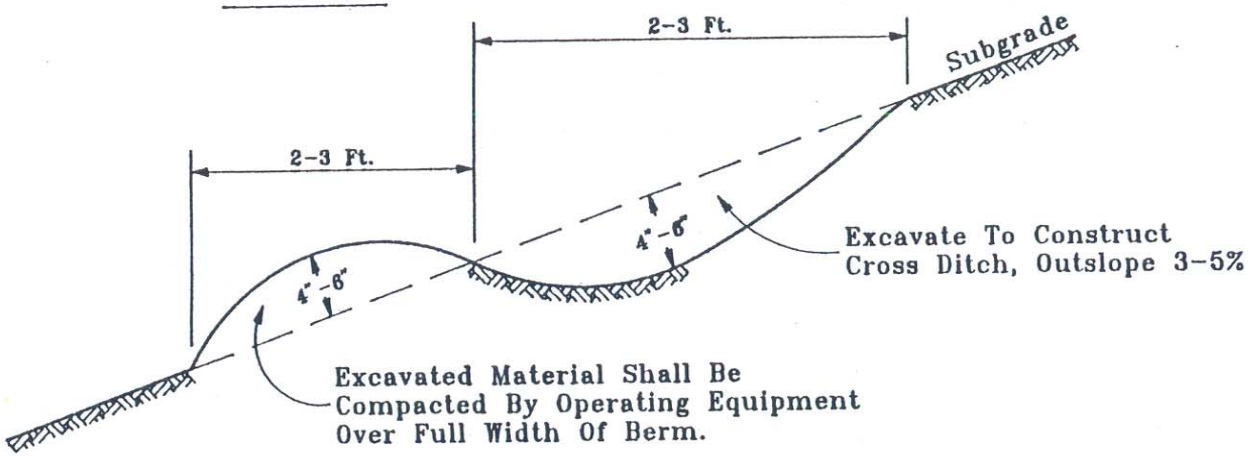

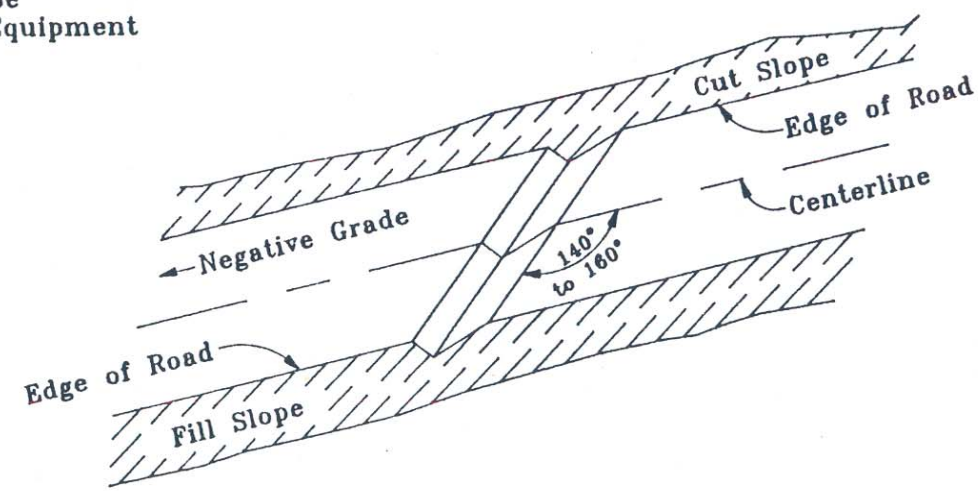

NOT TO SCALE

ISOMETRIC VIEW

PROJECT	SHEET	TOTAL SHEETS

ALL DRAWINGS, NO SCALE

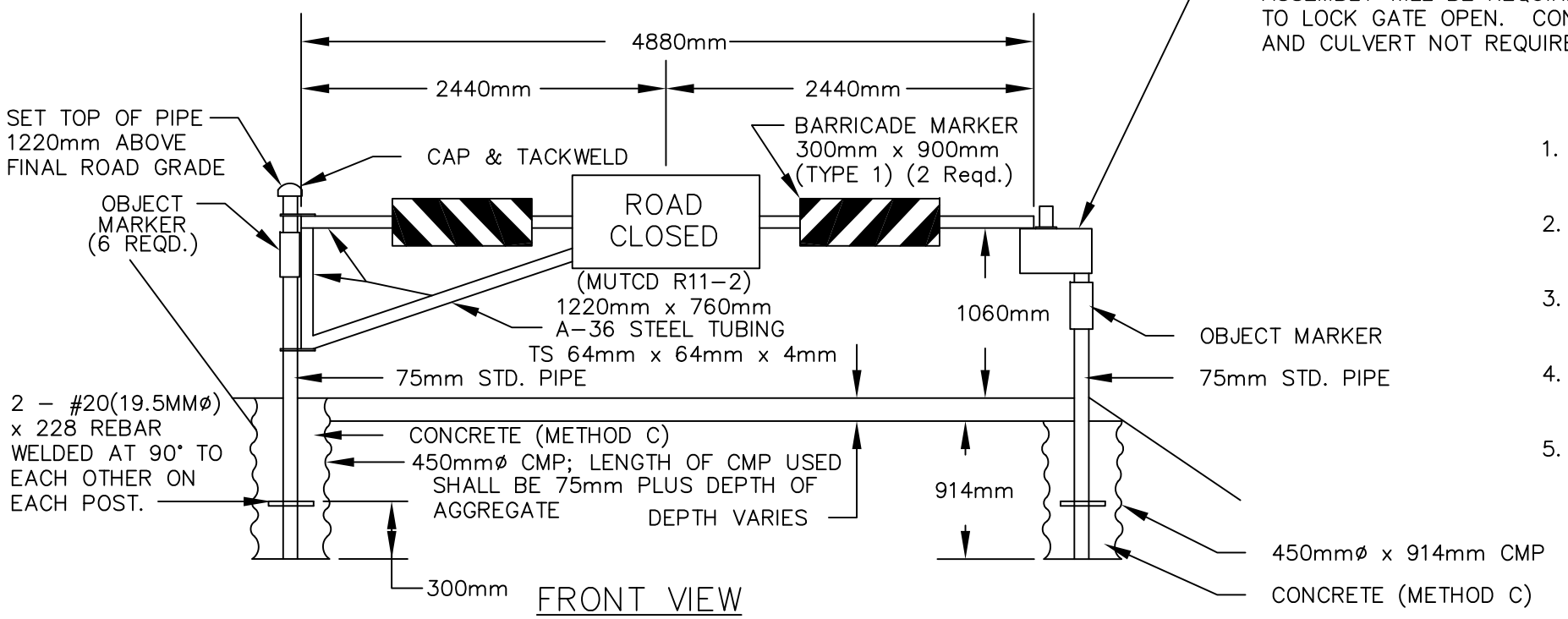

FRONT VIEW

NOTE: A SECOND LOCKING POST ASSEMBLY WILL BE REQUIRED TO LOCK GATE OPEN. CONCRETE AND CULVERT NOT REQUIRED.

NOTES

1. EXTERIOR ENAMEL SHALL BE TYPE 1, DARK GREEN; UNLESS OTHERWISE APPROVED BY THE ENGINEER.
2. ROAD CLOSED SIGN SHALL MEET MUTCD REQUIREMENTS FOR TYPE R11-2. (1 REQUIRED.)
3. BARRICADE MARKERS SHALL MEET MUTCD REQUIREMENTS FOR TYPE 1. COLOR - RED & WHITE. (2 REQUIRED.)
4. OBJECT MARKERS SHALL MEET MUTCD REQUIREMENTS FOR TYPE 2. (6 REQUIRED.)
5. ALL WELDS REQUIRED TO MANUFACTURE GATE, UNLESS OTHERWISE SHOWN, SHALL BE FILLET AND SHALL BE OF THE SAME SIZE AS THE THICKNESS OF THE SMALLER OF THE TWO PIECES BEING JOINED.

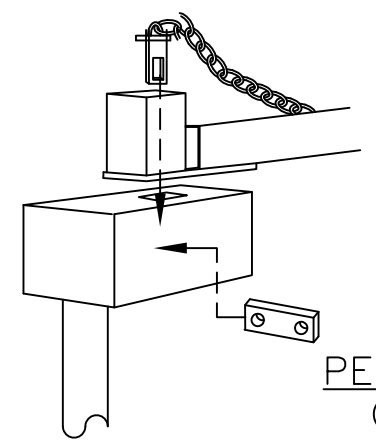

PERSPECTIVE VIEW
(LOCKING ASSEMBLY)

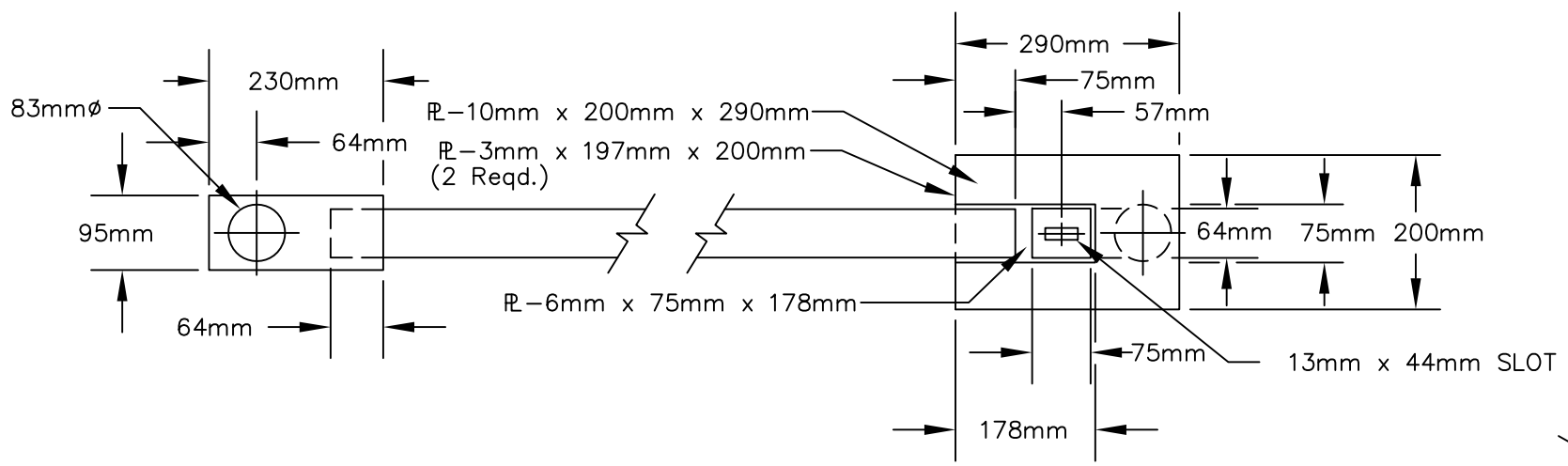

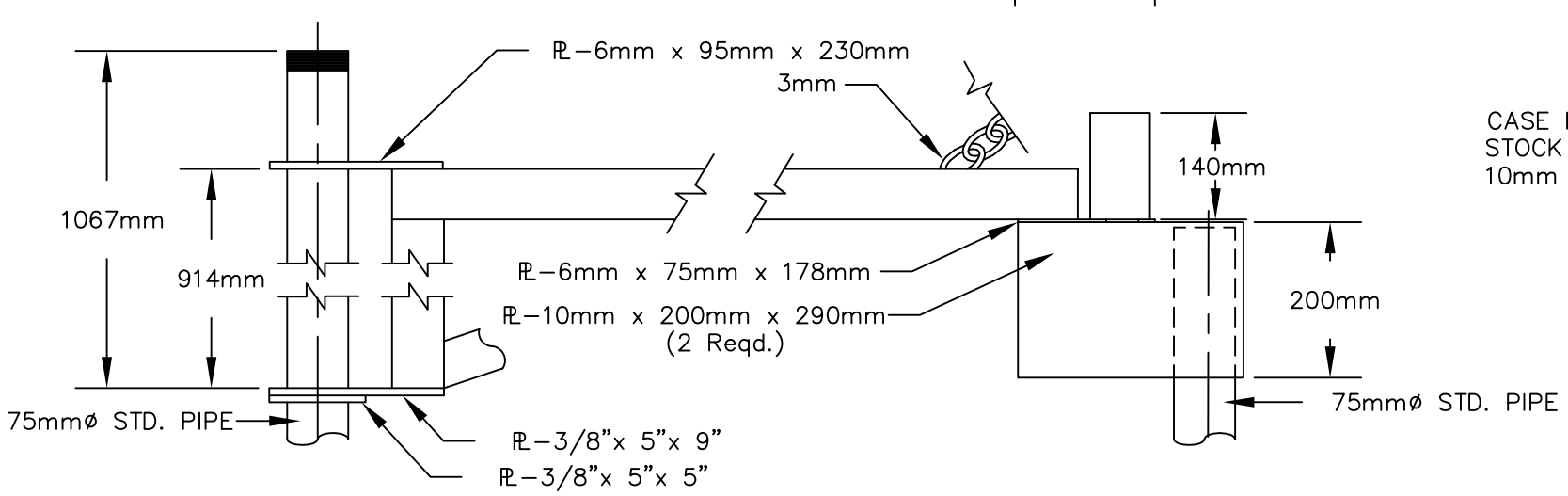

HINGE POST DETAIL

LOCKING POST DETAIL

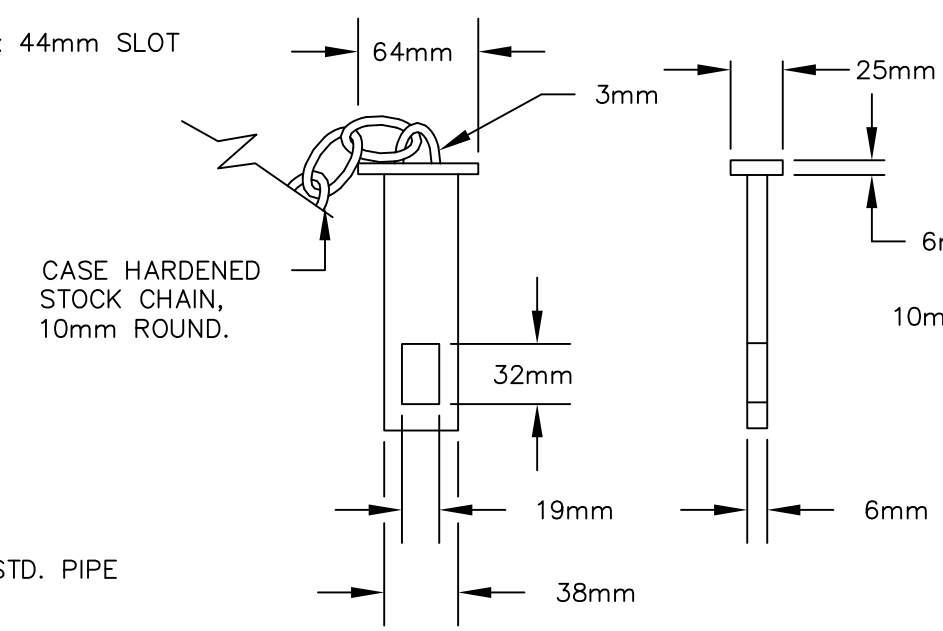

MASTER PIN DETAIL

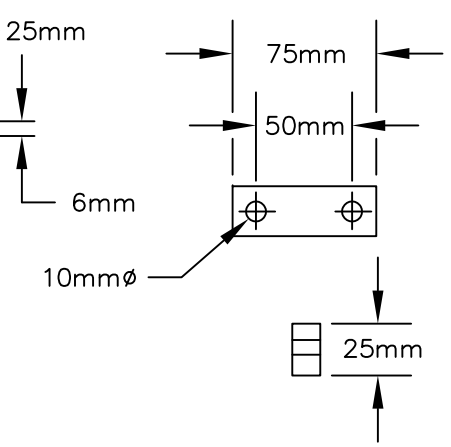

LOCK PIN DETAIL

839-15A
07/20/2015

839-16A TOPS AND LIMBS BARRIER

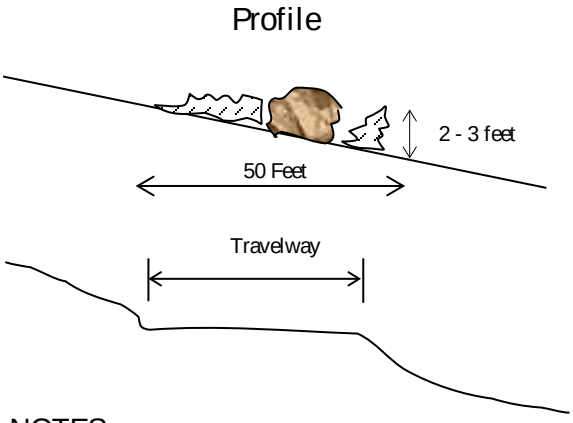

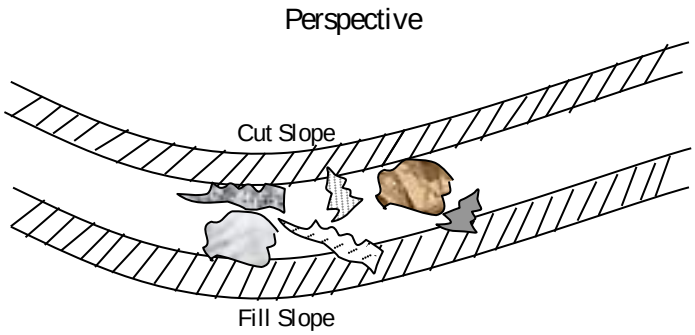

NOTES:
(1) Location of barrier shall be staked on the ground by the Forest Service.
(2) Pile tops and limbs the width of the travelway. The concentration height shall be at least 2 - 3 feet high and 200 feet in length.

839-16B STUMPS AND/OR CULL LOG BARRIER

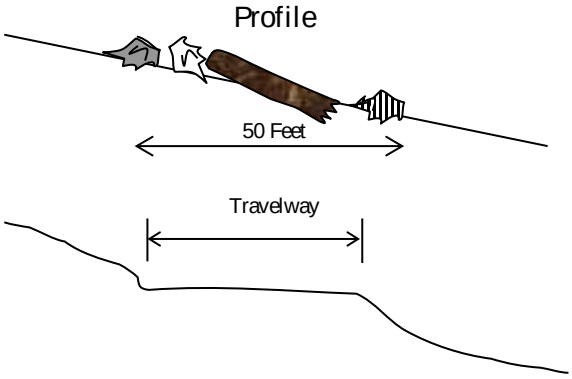

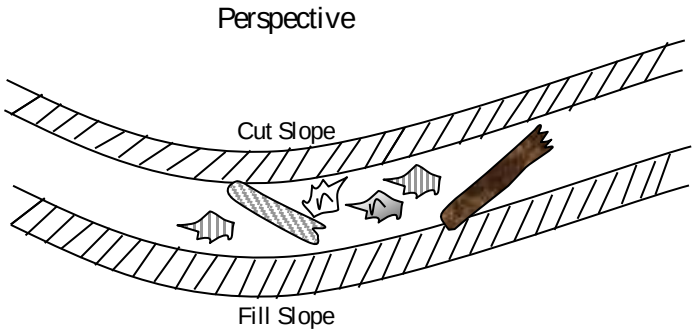

NOTES:
(1) Location of barrier shall be staked on the ground by the Forest Service
(2) Scatter stumps and/or cull logs randomly on travelway for a distance of 200 feet measured along centerline. At least 50% of the area shall be covered.

DRAWINGS NOT TO SCALE