FOREST SERVICE - REGION SIX
WILLAMETTE NATIONAL FOREST
DETROIT RANGER DISTRICT

PLANS FOR

BUTU 1 SPECIFIED ROADS

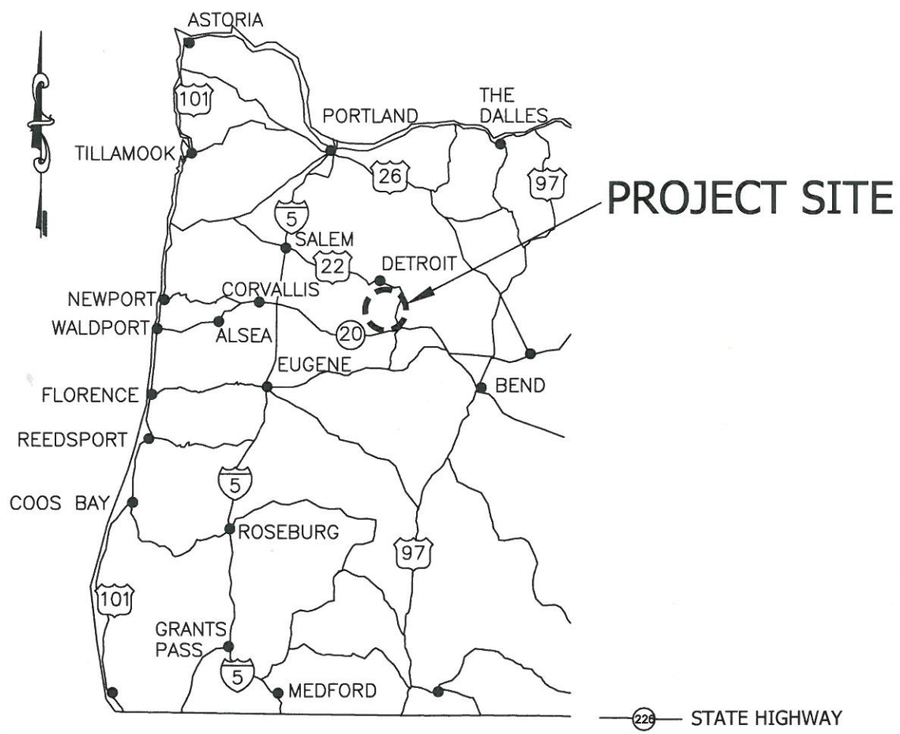

WESTERN OREGON INDEX MAP

STATE HIGHWAY
FEDERAL HIGHWAY
INTERSTATE HIGHWAY

PROJECT LOCATED IN LINN COUNTY, OREGON

ROAD NUMBER	LENGTH	TYPE OF WORK
11	6.64 miles	RECONSTRUCTION
1164	1.46 miles	RECONSTRUCTION
1168	1.60 miles	RECONSTRUCTION
1168-470	1.25 miles	RECONSTRUCTION

INDEX TO SHEETS

NO.	DESCRIPTION
1	TITLE
2	VICINITY MAP
3	GENERAL NOTES
4	ROAD 11 ESTIMATE OF QUANTITIES
5	ROAD 1164 ESTIMATE OF QUANTITES
6	ROAD 1168 ESTIMATE OF QUANTITES
7	ROAD 1168-470 ESTIMATE OF QUANTITES
8-9	ROAD 11 WORK SUMMARY
10	ROAD 1164 WORK SUMMARY
11	ROAD 1168 WORK SUMMARY
12	ROAD 1168-470 WORK SUMMARY
13	PARKETT BRIDGE ABUTMENT REPAIRS
14-15	MSE WALL DETAILS
16	METHOD B FILL REPAIR TYPICAL
17	ASPHALT REPAIR TABLE
18	DRAINAGE LISTING TABLE
19	G4 W-BEAM GUARDRAIL WOOD POSTS
20	DRAINAGE CONSTRUCTION TYPICALS
21	CLEARING AND GRUBBING TYPICAL
22	RECONSTRUCTION DETAILS
23	DISPOSAL TYPICALS

PLANS TO BE PRINTED ON 11" X 17"

WILLAMETTE national forest

DESIGNED BY: Michael Howard	DATE 6/26/2015
MICHAEL HOWARD - PROJECT ENGINEER	
REVIEWED BY: Mike	DATE 7/1/15
PEER REVIEWER	
REVIEWED BY:	DATE 7/6/15
JEFF CASWELL - DEVELOPMENT ENGINEER	
RECOMMENDED BY:	DATE 7/28/15
JAMIE STATEZNY - ZONE ENGINEER	
APPROVED BY: Grady A. McMahan	DATE 7/28/15
GRADY McMAHAN - DISTRICT RANGER	
APPROVED BY:	DATE July 7, 2015
FOREST ENGINEER	

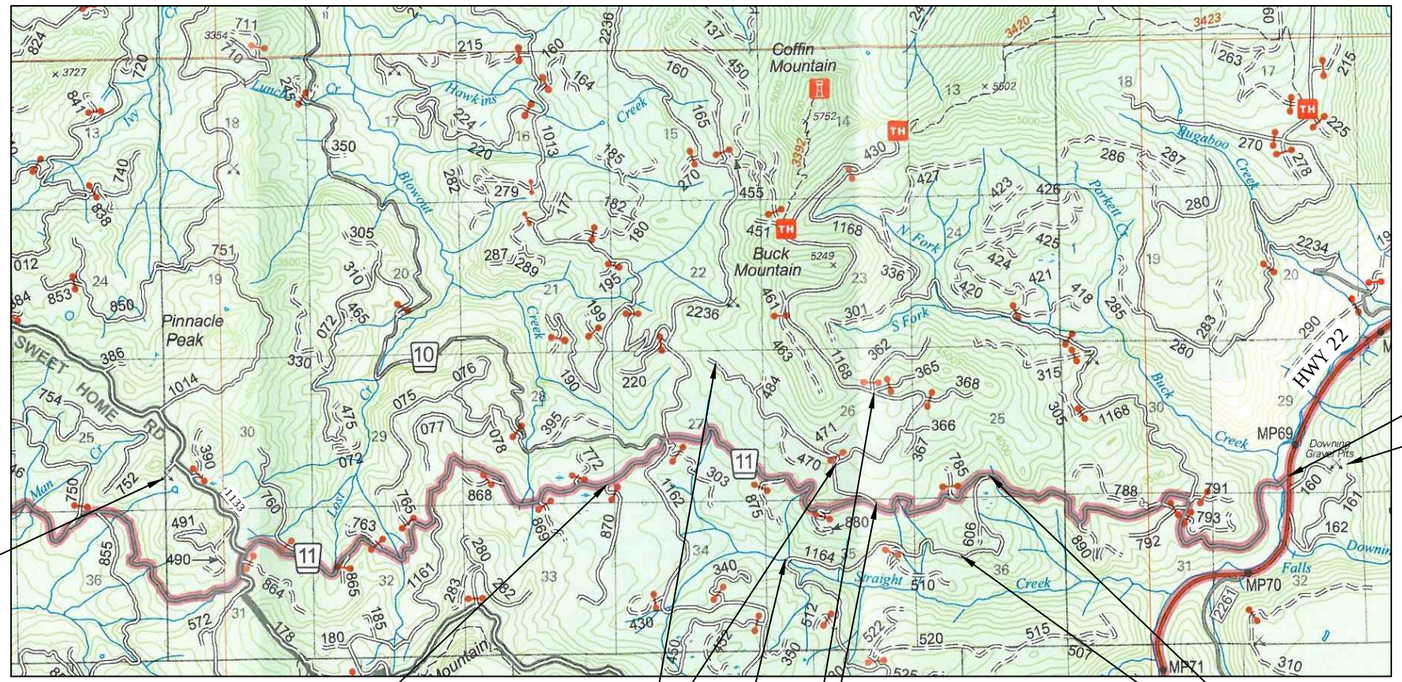

LEGEND

- Paved roads
- Other roads
- Other roads
- Water source
- Borrow/disposal area
- Stockpile source

0 1/2 1
Scale in miles

BUTU 1 SPECIFIED ROADS

VICINITY MAP

PACIFIC NORTHWEST REGION

U.S.D.A. FOREST SERVICE

SHEET NUMBER	TOTAL SHEETS
2	23

- All culvert installations/replacements with flowing water are considered stream channels. Replace culverts when stream channels are dry or during instream work window between June 1st through August 31st.

- Salvage and stockpile existing aggregate during culvert installation and use as bedding and initial backfill material.

- All new HDPE culvert installations require partial bevel cut to the inlet end (indirect cost to corresponding culvert installation).

- Designated disposal site(s) are identified on the plans. The Contracting Officer will flag the disposal areas prior to placement of material. Smooth, shape and compact material to drain with construction equipment as directed by Contracting Officer.

- Spread weed free mulch over disturbed soil at all culvert installations, fill repairs, disposal areas and other disturbed soil sites as directed by the Contracting Officer. All disturbed/constructed slopes flatter than 1V:1H shall be covered with mulch. Reconditioned ditches do not require mulch. Mulch shall be applied minimum 1" thick so that no gaps exist between soil and matrix.

- Construction tolerance class D for all roads.

- The submitted traffic control plan shall include methods for accommodating public traffic during temporary and daily closures. The plan shall include a detour route for work being performed at locations on FS road 11.

- FS road 11: Bridge located at MP 48.92 – Equipment or vehicles over 80,000 pounds gross vehicle weight restricted. Forest Service bridge overload permit is required for all vehicles over 80,000 pounds GVW.

Abbreviations

- HDPE: High Density Polyethylene
- CMP: Corrugated Metal Pipe
- BOP: Beginning Of Project
- EOP: End Of Project.
- FS: Forest Service.
- MSE: Mechanically Stabilized Earth.

BUTU 1 SPECIFIED ROADS

GENERAL NOTES

PACIFIC NORTHWEST REGION

U.S.D.A. FOREST SERVICE

SHEET NUMBER	TOTAL SHEETS
3	23

ITEM NUMBER	DESCRIPTION	UNIT	QUANTITIES	REMARKS
15101	Mobilization	Lump Sum	All	Includes fire protection, equipment cleaning, and temporary traffic control for ALL roads.
20103	Clearing and grubbing, disposal of tops and limbs F, logs J, stumps F	Mile	6.64	See clearing and grubbing typical. Includes tree removal for fill repair sites. Deck merchantable timber at locations approved by Contracting Officer.
20357	Removal of existing asphalt	Square Foot*	8675	Disposal method A.
20358	Removal of culvert, disposal method A	Each	1	
20415	Unsuitable excavation	Cubic Yard*	120	For removal of material behind jersey barriers and the roadway in guardrail sections for Parkett bridge as directed by Contracting Officer.
20462	Unclassified borrow, compaction method B	Cubic Yard*	500	Obtain borrow from Pinnacle or Downing pits. For replacement of any shortage or unsuitable material encountered during project work. Generating and sorting required.
25550	Mechanically stabilized earth wall	Square Foot	774.6	Includes structural excavation and placement of backfill, compaction method B. Also includes removal and haul of unsuitable material to the designated disposal area.
26201	Geogrid category 4	Square Yard*	1050	For method B fill repairs. Includes structural excavation and placement of backfill, compaction method B.
30304	Road reconditioning, ditch	Mile	0.81	Do not undercut road cutslopes when cleaning or reconstructing roadway ditch. Haul material to the designated disposal area.
32232	Haul and place stockpiled aggregate, compaction method B	Cubic Yard*	493	Government provided at Pinnacle pit, FS road 1133 MP 16.40. Obtain a mineral permit from the Detroit Ranger Station prior to haul.
40401	Minor hot asphalt concrete	Ton	216.88	Commercial source. ODOT spec. 1/2" dense gradation, Level II HMAC, asphalt grade PG 64-22. For fill repairs B and mechanically stabilized earth wall. Seal edges of with emulsified asphalt and blot with fine sand.
43007	Skin patch hot asphalt concrete mixture	Ton	87.07	Commercial source. ODOT spec. 1/2" dense gradation, Level II HMAC, asphalt grade PG 64-22. Seal edges of emulsified asphalt and blot with fine sand.
61710	Structure transition railing	Lump Sum	All	Remove and re-install existing railing. Includes all new posts, blocks, and necessary hardware.
62509	Mulching, dry method	Lump Sum	All	Contractor provided, see general notes.
63306	Object markers, type 3	Each	4	Type 3 object markers (Government provided upon request). Contractor to provided four 4"x4"x8' pressure treated posts and Eight 3/8" x 2" bolts. Also includes the removal of existing signs.
63404	Pavement markings type A, solid white fog line	Mile	27.00	Provide 2 coats over full length of road. Match fog lines at all intersections.
63406	Pavement markings type A, yellow centerline markings	Lump Sum	All	Provide 2 coats over full length of road. Provide a written recommendation for centerline striping according to MUTCD. Includes the removal of existing dashed yellow line by waterblast, grinding or other approved method.

* Denotes contract quantity

BUTU 1 SPECIFIED ROADS

ROAD 11 ESTIMATE OF QUANTITIES

PACIFIC NORTHWEST REGION

U.S.D.A. FOREST SERVICE

SHEET NUMBER	TOTAL SHEETS
4	23

ITEM NUMBER	DESCRIPTION	UNIT	QUANTITIES	REMARKS
20103	Clearing and grubbing, disposal of tops and limbs F, logs J, stumps F	Mile	1.46	See clearing and grubbing typical.
30359	Roadway reconditioning, compaction method E	Mile	1.46	Includes reconditioning of ditch, shoulder, roadbed, and aggregate surface. Do not undercut road cutslopes when cleaning or reconstructing roadway ditch. Haul material to the designated disposal area and place mulch.
32232	Haul and place stockpiled aggregate, compaction method B	Cubic Yard*	1326	In-place and compacted. Quantity includes curve widening. Turnouts do not require aggregate. Government provided at Pinnacle pit, FS road 1133, MP 16.40. Obtain a mineral permit from the Detroit Ranger Station prior to haul.

* Denotes contract quantity

BUTU 1 SPECIFIED ROADS

ROAD 1164 ESTIMATE OF QUANTITIES

PACIFIC NORTHWEST REGION

U.S.D.A. FOREST SERVICE

SHEET NUMBER	TOTAL SHEETS
5	23

ITEM NUMBER	DESCRIPTION	UNIT	QUANTITIES	REMARKS
20103	Clearing and grubbing, disposal of tops and limbs F, logs J, stumps F	Mile	1.60	See clearing and grubbing typical. Also includes tree removal for culvert installations. Deck merchantable timber at nearest turnout.
30359	Roadway reconditioning, compaction method E	Mile	1.60	Includes reconditioning of ditch, shoulder, roadbed and aggregate surface. Do not undercut road cutslopes when cleaning or reconstructing roadway ditch. Haul material to the designated disposal area and place mulch.
60256	18-inch corrugated steel pipe, 0.109-inch thickness, method B	Foot	6	Government furnished material (includes bands and bolts). Available for pickup at the Detroit Ranger Station. Coordinate pickup with the Contracting Officer.
60709	Cleaning culverts in place	Lump Sum	All	Remove and dispose of all foreign material within the barrel of the culvert by any method that does not damage the culvert.

* Denotes contract quantity

BUTU 1 SPECIFIED ROADS

ROAD 1168 ESTIMATE OF QUANTITIES

PACIFIC NORTHWEST REGION

U.S.D.A. FOREST SERVICE

SHEET NUMBER	TOTAL SHEETS
6	23

ITEM NUMBER	DESCRIPTION	UNIT	QUANTITIES	REMARKS
15713	Soil erosion and pollution control	Lump Sum	All	For culvert dewatering.
20103	Clearing and grubbing, disposal of tops and limbs F, logs J, stumps F	Mile	1.25	See clearing and grubbing typical. Also includes tree removal for culvert installations. Deck merchantable timber at nearest turnout.
20358A	Removal of culvert, disposal method A	Each	1	Does not include excavation.
20358B	Removal of existing gate, disposal methad A	Each	1	Includes all components of the gate structure.
20462	Unclassified borrow, compaction method B	Cubic Yard*	20	Obtain borrow from Pinnacle pit or other areas approved by Contracting Officer . Generating and sorting required.
30359	Roadway reconditioning, compaction method E	Mile	1.25	Includes reconditioning of ditch, shoulder, and roadbed. Do not undercut road cutslopes when cleaning or reconstructing roadway ditch. Haul material to the designated disposal area.
32232	Haul and place stockpiled aggregate, compaction method B	Cubic Yard*	235	In-place and compacted. Quantity includes curve widening. Turnouts do not require aggregate. Government provided at Pinnacle pit, FS road 1133 MP 16.40. Obtain a mineral permit from the Detroit Ranger Station prior to haul.
60278	24-inch corrugated polyethylene pipe, type S, method B	Foot	34	Government furnished material. Available for pickup at the Detroit Ranger Station. Coordinate pickup with the Contracting Officer.
60709	Cleaning culverts in place	Lump Sum	All	Remove and dispose of all foreign material within the barrel of the culvert by any method that does not damage the culvert.
62509	Mulching, dry method	Lump Sum	All	Contractor provided, see general notes.

* Denotes contract quantity

BUTU 1 SPECIFIED ROADS

ROAD 1168-470 ESTIMATE OF QUANTITIES

U.S.D.A. FOREST SERVICE

PACIFIC NORTHWEST REGION

MILE POST	ITEM NUMBER	QUANTITY	UNIT	RECONSTRUCTION SUMMARY
42.36				Beginning of project at mile post 42.36 on FS road 11.
				FS road 1100-870 right.
	20103	6.64	Mile	Begin clearing and grubbing.
	63404	27.00	Mile	Begin fog line striping.
42.89				FS road 10 left and FS road 1162 right.
	63406	All	Lump Sum	Begin centerline striping.
42.91				FS road 2236 left.
44.17	43007	7.25	Ton	Place hot asphalt concrete mixture for skin patch.
44.47				FS road 1100-875 right.
44.81				FS road 1168 right.
45.57				FS road 1100-785 left.
45.64	43007	3.63	Ton	Place hot asphalt concrete mixture for skin patch.
45.86				FS road 1164 right.
45.93	43007	4.23	Ton	Place hot asphalt concrete mixture for skin patch.
46.13				Borrow pit left.
46.48				FS road 1100-788 left.
46.71				FS road 1100-890 right.
46.77				Perform method B fill repair.
	20357	900	Square Foot*	Saw cut and remove existing asphalt.
	26201	275	Square Yard*	Place Geogrid category 4.
	32232	29	Cubic Yard*	Place crushed aggregate.
	40401	21.75	Ton	Place hot asphalt concrete mixture.
46.81	25550	381.3	Square Foot*	Construct 2 layers of mechnically stabilized earth wall.
	20358	1	Each	Remove existing culvert.
	20357	1176	Square Foot*	Saw cut and remove existing asphalt.
	32232	38	Cubic Yard*	Place crushed aggregate.
	40401	28.42	Ton	Place hot asphalt concrete mixture.
46.83				Perform method B fill repair.
	20357	3420	Square Foot*	Saw cut and remove existing asphalt.
	26201	482	Square Yard*	Place Geogrid category 4.
	32232	92	Cubic Yard*	Place crushed aggregate.
	40401	82.65	Ton	Place hot asphalt concrete mixture.
46.84	20357	552	Square Foot*	Saw cut and remove existing asphalt.
	32232	8	Cubic Yard*	Place crushed aggregate to level repairs on each end.
	40401	13.34	Ton	Place hot asphalt concrete mixture.
46.85				Perform method B fill repair.
	20357	1955	Square Foot*	Saw cut and remove existing asphalt.
	26201	293	Square Yard*	Place Geogrid category 4.
	32232	54	Cubic Yard*	Place crushed aggregate.
	40401	47.25	Ton	Place hot asphalt concrete mixture.
47.33	43007	1.60	Ton	Place hot asphalt concrete mixture for skin patch.
47.34	43007	1.16	Ton	Place hot asphalt concrete mixture for skin patch.
47.38	43007	2.66	Ton	Place hot asphalt concrete mixture for skin patch.
47.52	43007	14.89	Ton	Place hot asphalt concrete mixture for skin patch.
47.57				FS road 1168 left.
47.58				FS road 1100-791 left.
47.86	30304	0.25	Mile	Begin ditch reconstruction (existing CMP).

BUTU 1 SPECIFIED ROADS

ROAD 11 WORK SUMMARY

MILE POST	ITEM NUMBER	QUANTITY	UNIT	RECONSTRUCTION SUMMARY
48.11				End ditch reconstruction.
	20415	100	Cubic Yard*	Begin removal of unsuitable material behind existing jersey barriers. Scatter logs on fill slope.
48.31				End removal of unsuitable material behind existing jersey barriers.
	30304	0.56	Mile	Begin ditch reconstruction.
48.80	43007	3.32	Ton	Place hot asphalt concrete mixture for skin patch.
48.87				End ditch reconstruction.
48.90	20415	20	Cubic Yard*	Remove material adjacent, along side, and underneath all bridge guardrails and bridge deck as directed by Contracting Officer.
48.92				Begin Parkett bridge. Repair bridge abutment 2 settlement.
	61710	All	Lump Sum	Remove and re-install existing bridge transition railing to perform bridge abutment settlement repair. Provide new posts, blocks, and any necesarry hardware.
	20357	336	Square Foot*	Saw cut and remove existing asphalt.
	25550	236.0	Square Foot*	Construct 3 layers of mechnically stabilized earth wall. Haul all excavated material to the nearest designated disposal area.
	32232	159	Cubic Yard*	Place crushed aggregate as backfill.
	40401	8.12	Ton	Place hot asphalt concrete mixture.
	43007	3.38	Ton	Place hot asphalt concrete mixture for skin patch from abutment edge onto bridge deck.
	63306	2	Each	Install 2 type 3 object markers as directed by Contracting Officer.
48.94				End Parkett bridge. Repair bridge abutment 1 settlement.
	61710	All	Lump Sum	Remove and re-install existing bridge transition railing to perform bridge abutment settlement repair. Provide new posts, blocks and any necesarry hardware.
	20357	336	Square Foot*	Saw cut and remove existing asphalt.
	25550	157.3	Square Foot*	Construct 2 layers of mechnically stabilized earth wall. Haul all excavated material to the nearest designated disposal area.
	32232	113	Cubic Yard*	Place crushed aggregate as backfill.
	40401	8.12	Ton	Place hot asphalt concrete mixture.
	43007	3.38	Ton	Place hot asphalt concrete mixture for skin patch from abutment edge onto bridge deck.
	63306	2	Each	Install 2 type 3 object markers as directed by Contracting Officer.
49.00				Junction with Highway 22 at MP 69.25.
				End clearing and grubbing.
				End fog line striping.
				End centerline striping.
				End of project.
Various locations	43007	40.00	Ton	Place hot asphalt concrete mixture for skin patches at locations marked by Contracting Officer.

BUTU 1 SPECIFIED ROADS

ROAD 11 WORK SUMMARY

MILE POST	ITEM NUMBER	QUANTITY	UNIT	RECONSTRUCTION SUMMARY
0.00				Beginning of project at mile post 3.14 on FS road 11.
	20103	1.46	Mile	Begin clearing and grubbing.
	30359	1.46	Mile	Begin roadway reconditioning.
	32232	1326	Cubic Yard*	Begin crushed aggregate placement, 4-inch compacted depth.
0.38				FS road 1164-606 right.
1.46				FS road 1164-510 left.
				End clearing and grubbing.
				End roadway reconditioning.
				End crushed aggregate placement.
				End of project.
1.47				Disposal area right.
2.33				Water source right (Straight Creek).

SHEET NUMBER 10

TOTAL SHEETS 23

BUTU 1 SPECIFIED ROADS

ROAD 1164 WORK SUMMARY

MILE POST	ITEM NUMBER	QUANTITY	UNIT	RECONSTRUCTION SUMMARY
0.00				Junction with FS road 11 at mile post 47.57.
8.08				FS road 1168-362 left.
8.10				FS road 1168-365 left.
8.26				Beginning of project.
	20103	1.60	Mile	Begin clearing and grubbing.
	30359	1.60	Mile	Begin roadway reconditioning.
	60709	All	Lump Sum	Begin cleaning barrels of all existing culverts.
8.48				FS road 1168-368 left.
8.57				Remove 6 ft of crushed inlet end of existing CMP (incidental to item 60256).
	60256	6	Foot	Install 6 ft of 18-inch CMP.
8.72				FS road 1168-366 left.
9.38				FS road 1168-470 right.
9.86				FS road 11 left and right.
				End of project.
				End clearing and grubbing.
				End roadway reconditioning.
				End cleaning the barrels of all existing culverts.

BUTU 1 SPECIFIED ROADS

ROAD 1168 WORK SUMMARY

MILE POST	ITEM NUMBER	QUANTITY	UNIT	RECONSTRUCTION SUMMARY
0.00				Beginning of project at mile post 9.38 on FS road 1168.
	20103	1.25	Mile	Begin clearing and grubbing.
	30359	1.25	Mile	Begin roadway reconditioning.
	60709	All	Lump Sum	Begin cleaning the barrels of all existing culverts.
0.01	20358B	1	Each	Remove and dispose of existing gate.
0.08				FS road 1168-471 right.
0.10				FS road 1168-472 left.
0.38				FS road 1168-479 left.
0.67				Un-named road left.
0.84				FS road 1168-484 right.
1.05				Begin outsloping road 3%.
	32232	235	Cubic Yard*	Begin crushed aggregate placement, 6-inch compacted depth.
1.18				Replace existing culvert.
	20358A	1	Each	Remove existing culvert.
				Remove logs from culvert excavation and place as directed by Contracting Officer (incidental to item 60278).
	20462	20	Cubic Yard*	Place borrow to replace void from removed logs.
	60278	34	Foot	Install 24-inch HDPE pipe at same skew and grade.
1.25				End of project.
				End clearing and grubbing.
				End roadway reconditioning.
				End cleaning the barrels of all existing culverts.
				End crushed aggregate placement.

FOREST SERVICE U S DEPARTMENT OF AGRICULTURE

BUTU 1 SPECIFIED ROADS

ROAD 1168-470 WORK SUMMARY

PLAN

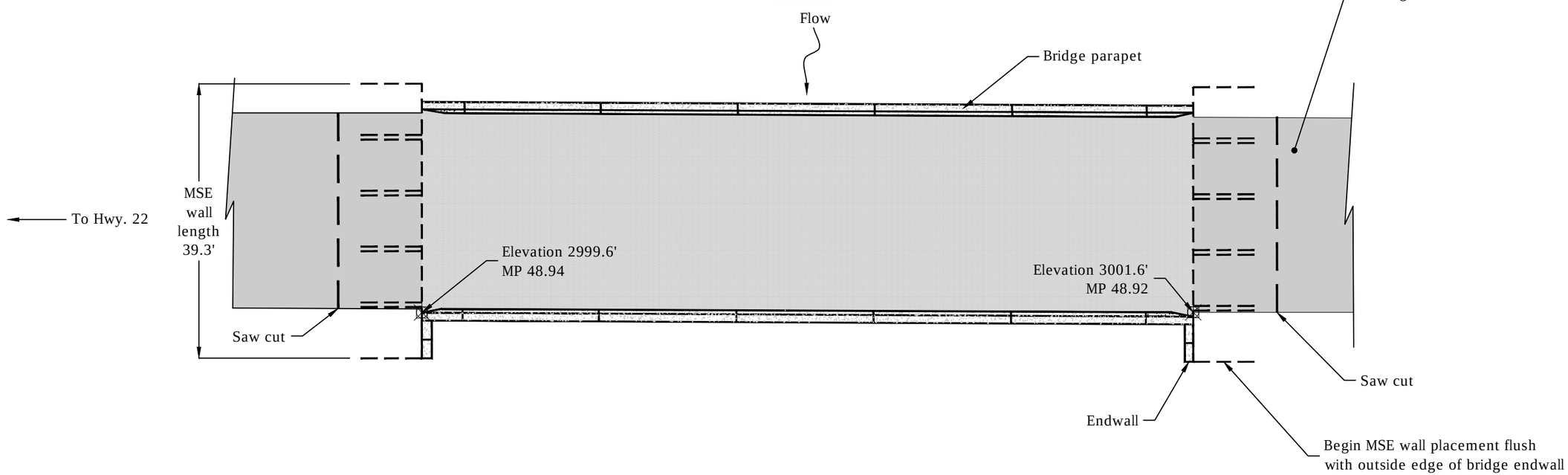

PROFILE

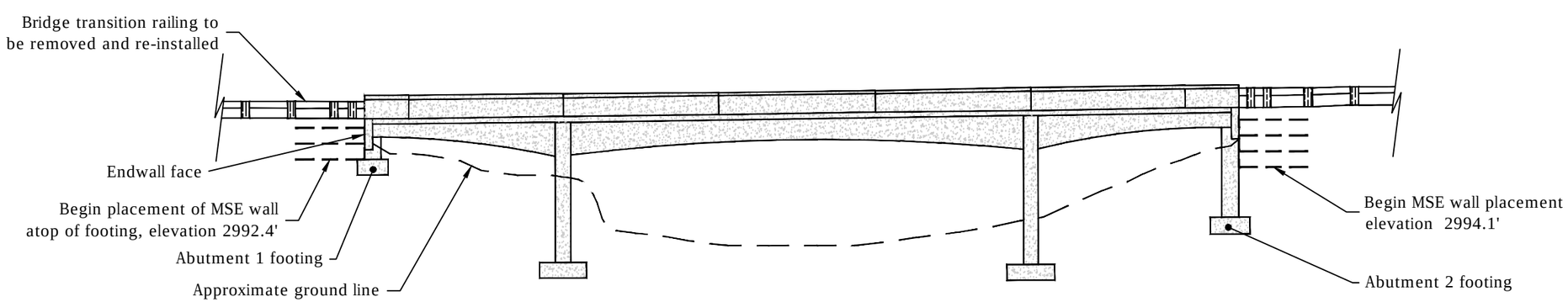

NOTES:
1) Drawing not to scale.

BUTU 1 SPECIFIED ROADS

PARKETT BRIDGE ABUTMENT REPAIRS

PACIFIC NORTHWEST REGION

U.S.D.A. FOREST SERVICE

SHEET NUMBER	TOTAL SHEETS
13	23

STEP 1

PLACE THE FIRST COURSE OF SOIL REINFORCEMENT MATS ON PREPARED FOUNDATION

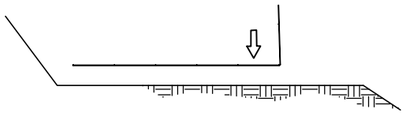

STEP 2

PLACE THE BACKING MAT AGAINST THE INSIDE FACE OF THE SOIL REINFORCEMENT MAT. CLIP THE SECOND–TO–TOP TRANSVERSE WIRE ON THE BACKING MAT TO THE TOP TRANSVERSE WIRE ON THE SOIL REINFORCEMENT MAT.

INSTALL FILTER FABRIC OR CONTINUOUS HARDWARE CLOTH, HOG–RING TO THE TOP WIRE ON THE BACKING MAT.

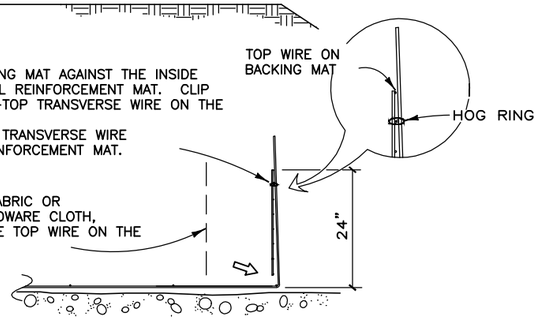

STEP 3

PLACE AND COMPACT THE BACKFILL IN LAYERS AND DENSITIES AS SPECIFIED IN THE PROJECT PLANS. LEAVE A VOID AT THE FACE AS SHOWN.

PLACE THE SECOND COURSE OF SOIL REINFORCEMENT MATS WITH THE BASE LONGITUDINAL WIRES RESTING ON THE TOP TRANSVERSE WIRE OF THE BACKING MAT BELOW. SLIDE THE SOIL REINFORCEMENT MAT INTO ALIGNMENT.

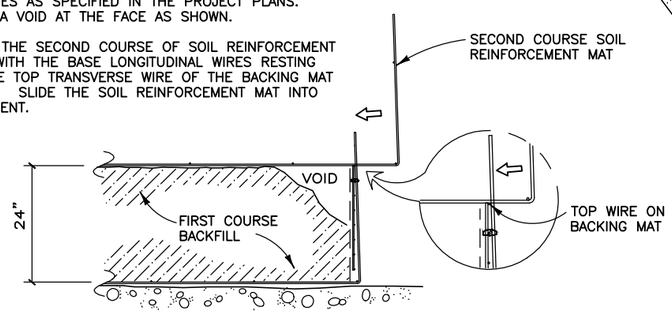

STEP 4

HOOK THE BOTTOM TRANSVERSE WIRE OF THE BACKING MAT OVER THE VERTICAL PRONGS ON THE LOWER MAT. ROTATE THE BACKING MAT TO VERTICAL AND CLIP THE SECOND–TO–TOP TRANSVERSE WIRE ON THE BACKING MAT TO THE TOP WIRE ON THE SOIL REINFORCEMENT MAT.

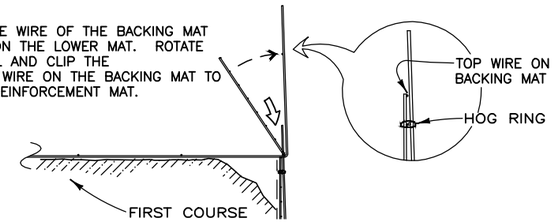

STEP 5

INSTALL THE FILTER FABRIC OR CONTINUOUS HARDWARE CLOTH. PLACE AND COMPACT THE BACKFILL TO THE BASE ELEVATION OF THE NEXT MAT. REPEAT STEPS 3 THROUGH 5 TO THE TOP LIFT.

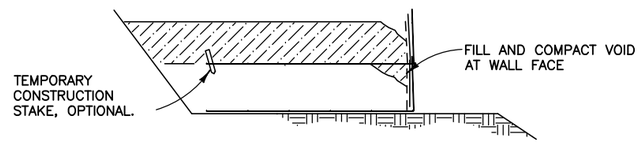

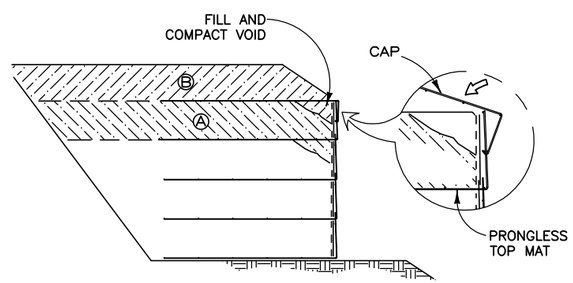

STEP 6: TOP LIFT

PLACE THE TOP LIFT (PRONGLESS MAT), BACKING MAT AND FILTER FABRIC OR CONTINUOUS HARDWARE CLOTH. PLACE AND COMPACT BACKFILL IN AREA "A". HOOK THE CAP OVER THE MIDDLE TRANSVERSE WIRE ON THE PRONGLESS MAT, AND ROTATE INTO PLACE. BACKFILL "B" TO 1'–6" MIN. COVER OVER THE CAP.

CONSTRUCTION SEQUENCE

NOT TO SCALE

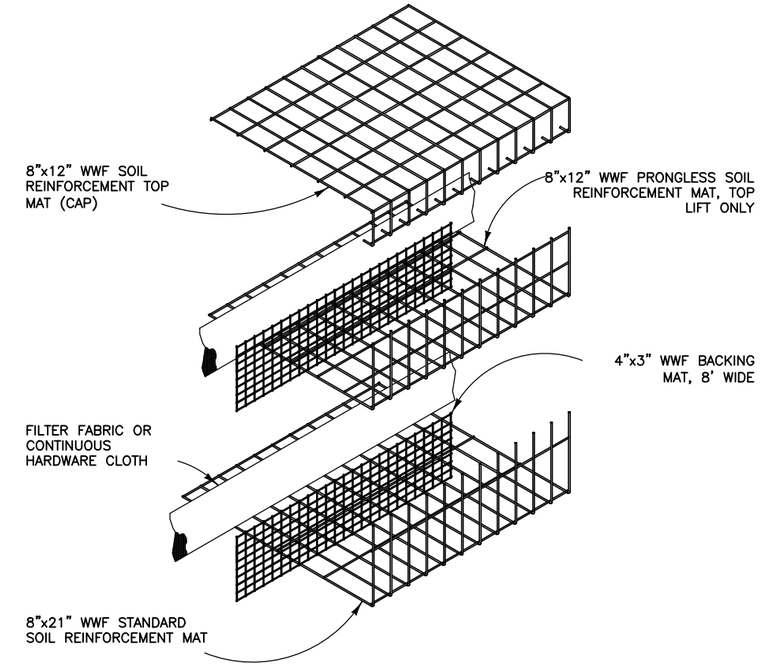

WALL COMPONENTS

NOT TO SCALE

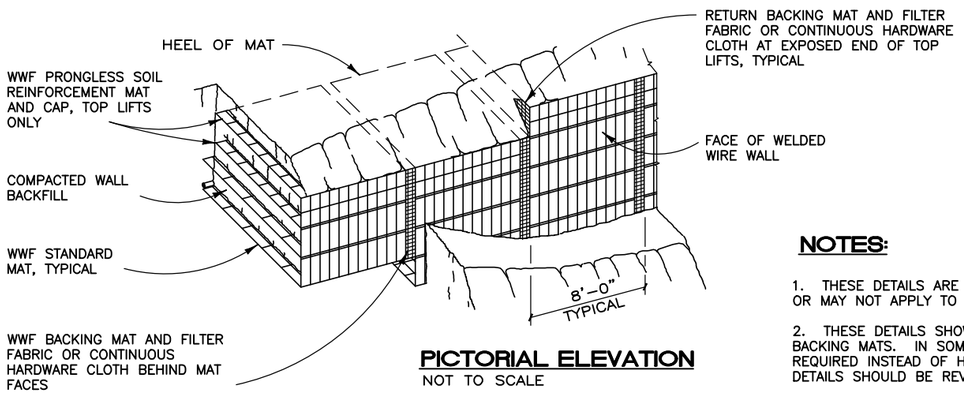

PICTORIAL ELEVATION

NOT TO SCALE

NOTES:

1. THESE DETAILS ARE INTENDED FOR INFORMATION ONLY. THEY MAY OR MAY NOT APPLY TO SPECIFIC PROJECTS.

2. THESE DETAILS SHOW HARDWARE CLOTH USED BEHIND THE BACKING MATS. IN SOME APPLICATIONS, FILTER FABRIC WILL BE REQUIRED INSTEAD OF HARDWARE CLOTH. IN THAT CASE, THESE DETAILS SHOULD BE REVISED ACCORDINGLY.

3. WWF = WELDED WIRE FABRIC

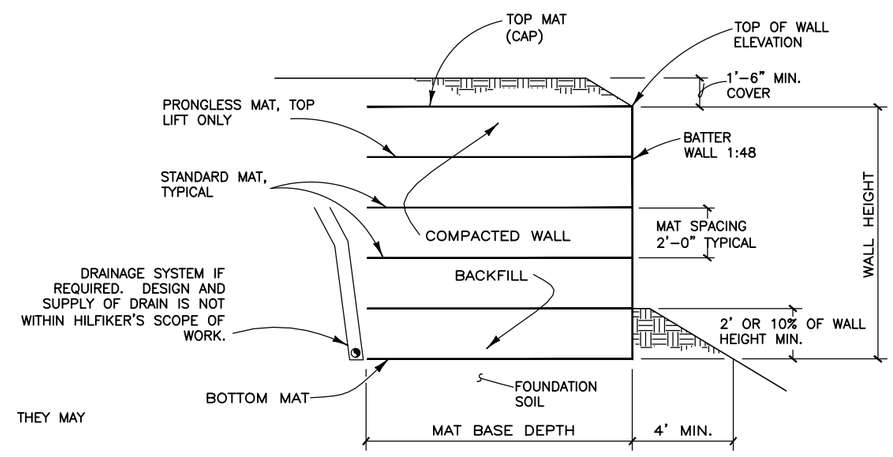

TYPICAL SECTION

NOT TO SCALE

Drawing obtained from Hilfiker Retaining Walls

Drawing not to scale

BUTU 1 SPECIFIED ROADS

MSE WALL DETAILS

PACIFIC NORTHWEST REGION

U.S.D.A. FOREST SERVICE

SHEET NUMBER	TOTAL SHEETS
14	23

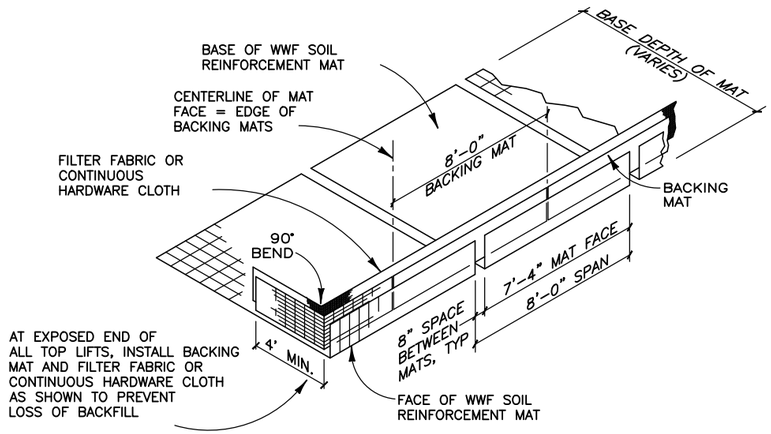

ISOMETRIC VIEW

WELDED WIRE WALL COMPONENTS WITH RETURN MAT

NOT TO SCALE

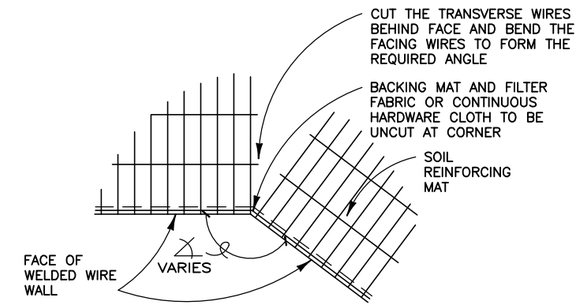

PLAN VIEW

CONCAVE ANGLE DETAIL

NOT TO SCALE

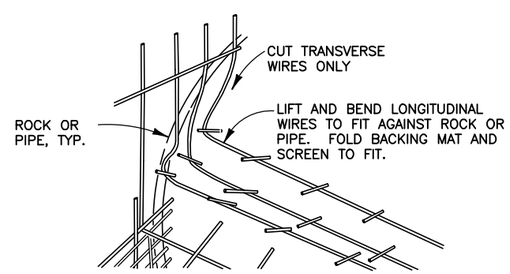

PICTORIAL

FITTING MATS TO OBSTRUCTION

NOT TO SCALE

Drawing not to scale

Drawing obtained from Hilfiker Retaining Walls

BUTU 1 SPECIFIED ROADS

MSE WALL DETAILS

PACIFIC NORTHWEST REGION

U.S.D.A. FOREST SERVICE

SHEET NUMBER	TOTAL SHEETS
15	23

METHOD B FILL REPAIR

SECTION VIEW

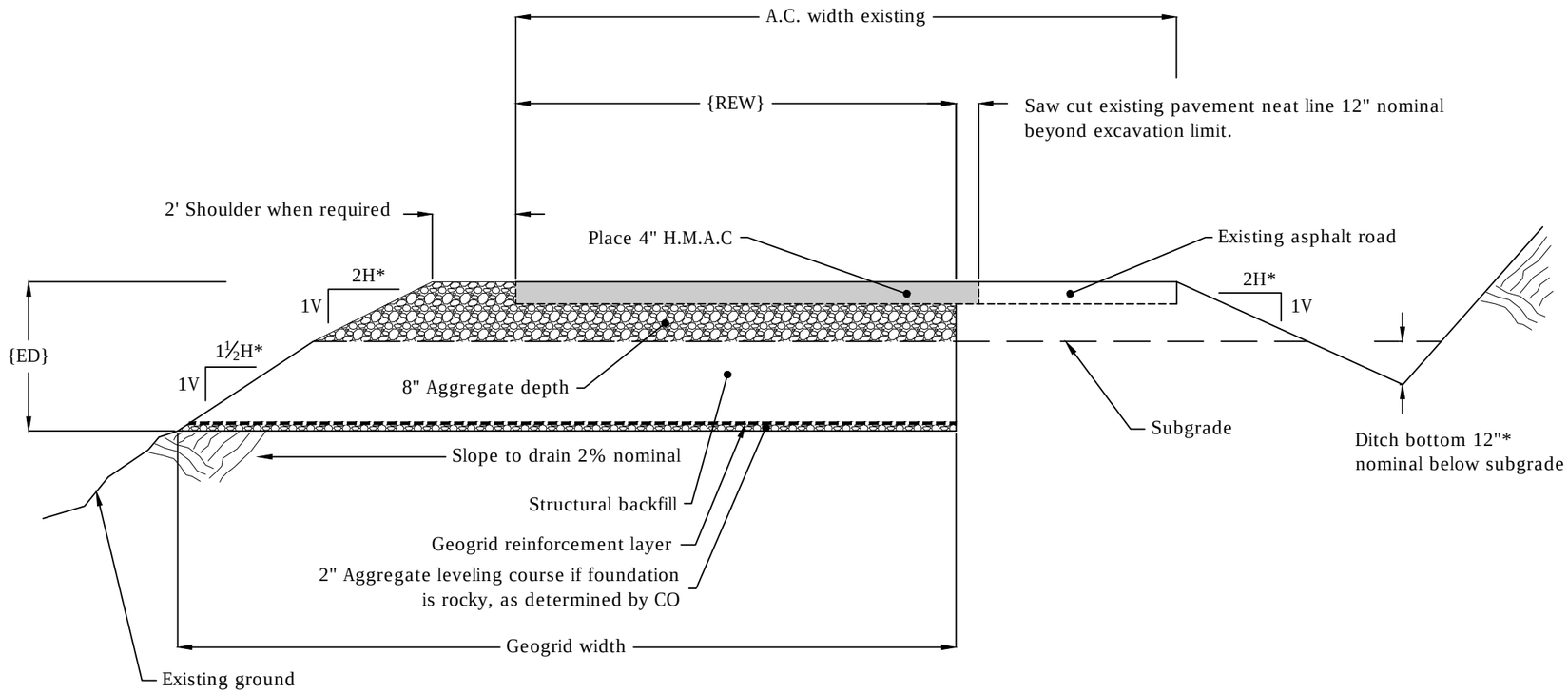

NOTES:

1) Drawing not to scale.
2) {REW} - Roadbed excavation width - see asphalt repair table
3) {ED} - Excavation depth - see asphalt repair table
4) Dimensions are listed on the asphalt repair table.
5) Dimensions marked with an asterisk may be adjusted by the Contracting Officer in order to fit the existing site geometry.
6) Structural backfill shall comply with the requirements of the subsection 704.04.
7) Segments of fill repairs that cannot be roller compacted shall be compacted by mechanical wackers to obtain like compaction.
8) Excavation quantities include quantities to daylight fill repairs.
9) Maintain existing super elevation, crown and slope of road. Create smooth transitions to existing road surface and prism.
10) Geogrids shall comply with supplemental specification section 714.03, physical strength category 4.

BUTU 1 SPECIFIED ROADS

METHOD B FILL REPAIR TYPICAL

PACIFIC NORTHWEST REGION

U.S.D.A. FOREST SERVICE

SHEET NUMBER	TOTAL SHEETS
16	23

MILE POST	FILL REPAIR TYPE	AVG. ASPHALT CUT OR SKIN PATCH DIMENSIONS		AVG. EXCAVATION DIMENSIONS			ASPHALT EXCAVATION (SF)	UNCLASSIFIED BORROW (CY*)	MECHANICALLY STABILIZED EARTH WALL				GEOGRID (SF*)	CRUSHED AGGREGATE		HOT A.C. PLANT MIX		REMARKS
		LENGTH (FT)	AVG. WIDTH (FT)	LENGTH (FT)	{REW} WIDTH (FT)	{ED} DEPTH (FT)			TOTAL FACE AREA (SF)	LENGTH (FT)	MAT BASE DEPTH (FT)	NUMBER OF MATS**		DEPTH (INCHES)	TOTAL (CY*)	DEPTH (INCHES)	TOTAL (TONS)	
44.17	Skin	25	24													2	7.50	
45.64	Skin	25	12													2	3.75	
45.93	Skin	25	14													2	4.38	
46.77	B	75	12	75	25	4	900	500 CY to be used when unsuitable material is encoutered					275	8	29	4	22.50	Provide 2 ft shoulder right side. Extend excavation 13 ft beyond edge of asphalt.
46.81	MSE	98	12	98	11	5.5	1176		381.3	95.33	17.50	24		8	38	4	29.40	Provide 2 ft shoulder right side.
46.83	B	114	30	114	30	4	3420						482	8	92	4	85.50	Provide 2 ft shoulder right side.
46.84	na	24	23				552							4	8	4	13.80	Provide 2 ft shoulder right side.
46.85	B	85	23	85	23	4	1955						293	8	54	4	48.88	Provide 1 ft shoulder each side.
47.33	Skin	12	11													2	1.65	
47.34	Skin	12	8													2	1.20	
47.38	Skin	20	11													2	2.75	
47.52	Skin	112	11													2	15.40	
48.80	Skin	25	11													2	3.44	
48.92	MSE	12	28				336		236.0	39.33	8.75	15		NA	159	4	8.40	For bridge abutment 2 settlement repair. Backfill with crushed aggregate. Construct 3 Layer MSE wall.
48.92	Skin	10	28													2	3.50	From bridge abutment 2 onto bridge deck.
48.94	Skin	10	28													2	3.50	From bridge abutment 1 onto bridge deck.
48.94	MSE	12	28				336		157.3	39.33	8.75	10		NA	113	4	8.40	For bridge abutment 1 settlement repair. Backfill with crushed aggregate. Construct 2 Layer MSE wall.
																	40.00	40.00 tons to be placed as skin patches at locations marked by Contracting Officer.
						TOTALS	8675	500	774.6				1050	NA	493	NA	303.95	

MSE = Mechanically Stabilized Earth wall
{REW} = Roadway Excavation Width; Corresponds to fill repair detail
{ED} = Excavation Depth; Corresponds to fill repair detail
Excavation quantity includes existing shoulder and 1 1/2 H : 1 V enbankment (fill) slope
Length and width dimensions are "NOMINAL". Field dimensions may vary
*Denotes contract quantity
**Mat size of 2' x 7'-4" welded wire size W 9.5 x W 4.0, Top mat W 7.0 x W 3.5. Galvanize after fabrication according to AASHTO M111.

BUTU 1 SPECIFIED ROADS

ASPHALT REPAIR TABLE

PACIFIC NORTHWEST REGION

U.S.D.A. FOREST SERVICE

SHEET NUMBER	TOTAL SHEETS
17	23

ROAD NUMBER	DESIGNED				AS BUILT				INSTALLATION DETAILS			RIPRAP		CULVERT OUTLET DITCH (FT)	CLEAN EXISTING CULVERT	CRUSHED AGGREGATE		REMARKS
	STATION OR MILE POST	PIPE		OUTLET PIPE	STATION OR MILE POST	PIPE		OUTLET PIPE	TYPE	SKEW (°)	GRADE (%)	KEYED				DEPTH (INCHES)	TOTAL (CY*)	
		DIAMETER (INCH)	LENGTH (FT)	FULL CIRCLE (FT)		DIAMETER	LENGTH (FT)	FULL CIRCLE (FT)				HEADWALL (CY)	SPLASH PAD (CY)					
11	46.81																	Remove existing culvert.
1168	Entire length														All			Clean barrel of all culverts.
	8.57	18	6															Government furnished pipe.
1168-470	Entire length														All			Clean barrel of all culverts.
	1.18	24	34						#	#	#							Government furnished pipe.

# Denotes skew, grade and type shall match removed installation unless otherwise noted.

Some installations of culverts may require additional excavation below existing grade line.

BUTU 1 SPECIFIED ROADS

DRAINAGE LISTING TABLE

PACIFIC NORTHWEST REGION

U.S.D.A. FOREST SERVICE

SHEET NUMBER	TOTAL SHEETS
18	23

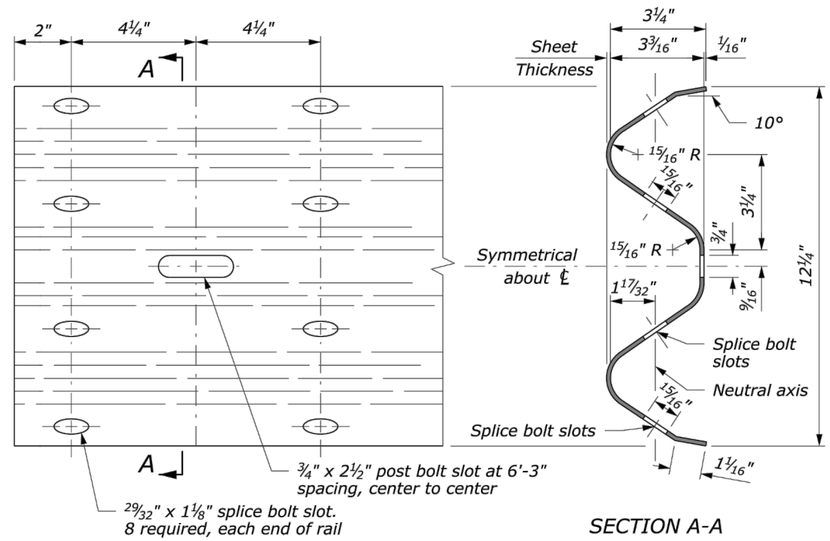

W BEAM RAIL

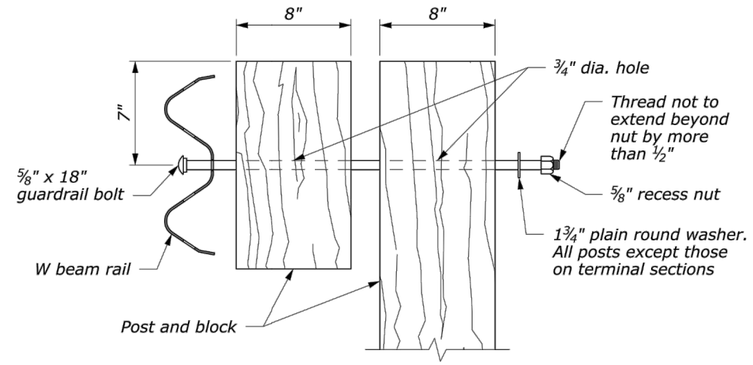

POST BOLT ASSEMBLY

NOTE:

1. When encountering impenetrable material, see Standards 617-13 or 617-24.
2. See Special Contract Requirements when 7'-0" or longer posts are specified.
3. See Special Contract Requirements when the alternative hole arrangement is specified.
4. Install reflector tab between post bolt and rail, every fourth post. Alternate reflector tab shapes are acceptable.
5. Dimensional tolerances not shown or implied are intended to be those consistent with the proper functioning of the part, including its appearance, and accepted manufacturing practices.

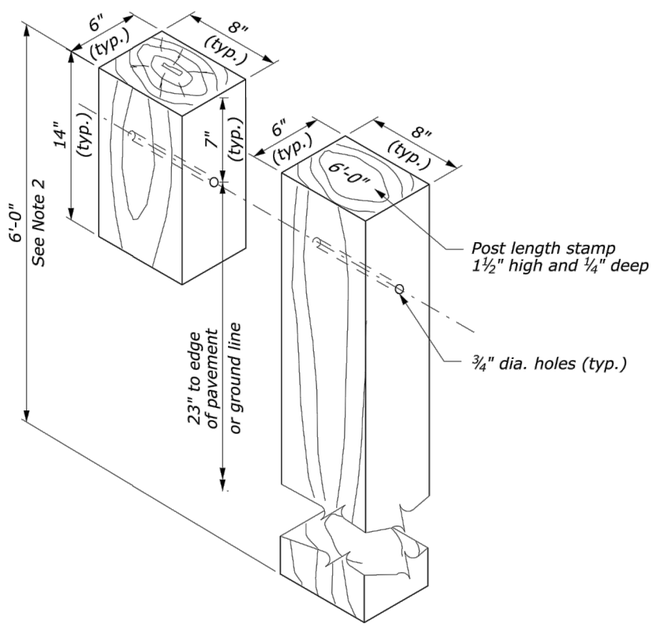

STANDARD HOLE ARRANGEMENT POST AND BLOCK DETAIL

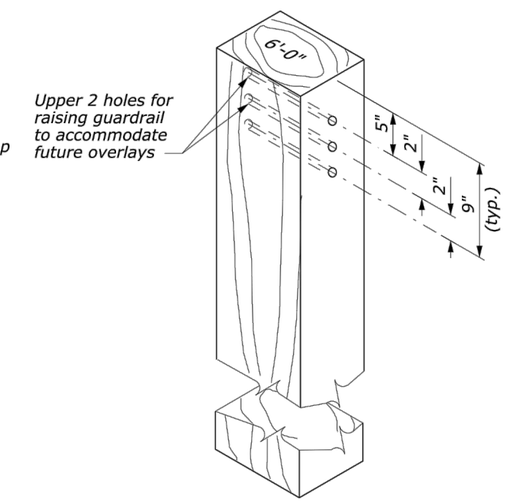

ALTERNATE HOLE ARRANGEMENT POST AND BLOCK DETAIL

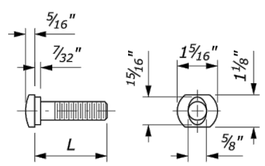

⅝" GUARDRAIL BOLT

L	Thread Length
1¼"	1⅛" minimum
2"	1¾" minimum
10"	4" minimum
18"	4" minimum
25"	4" minimum

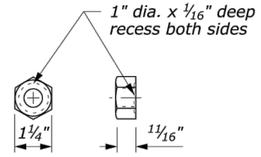

⅝" RECESS NUT

GUARDRAIL BOLT AND RECESS NUT

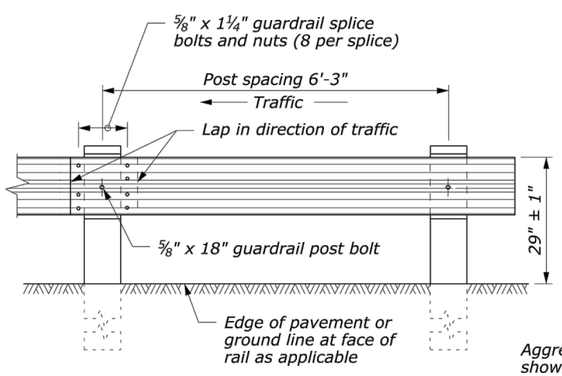

POST SPACING STANDARD POST SECTION

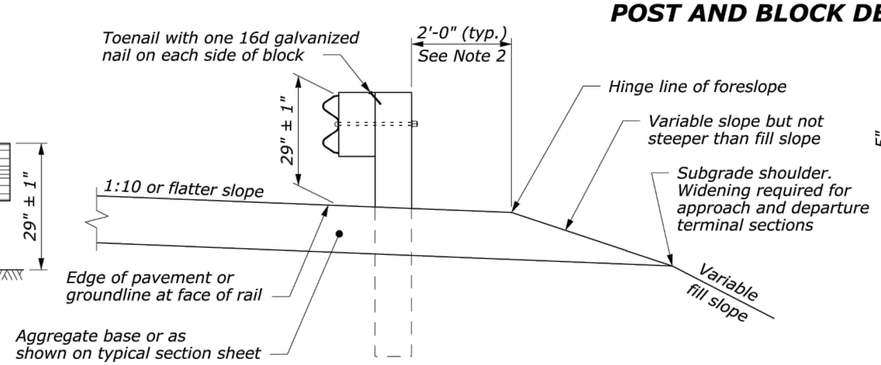

TYPICAL GUARDRAIL CROSS SECTION

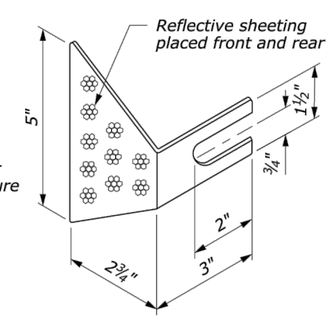

REFLECTOR TAB
(See Note 4)

NO SCALE

Drawing not to scale

Drawing obtained from Federal Highway Administration

BUTU 1 SPECIFIED ROADS

G4 W-BEAM GUARDRAIL WOOD POSTS

PACIFIC NORTHWEST REGION

U.S.D.A. FOREST SERVICE

SHEET NUMBER	TOTAL SHEETS
19	23

CULVERT TYPES

TYPE 1

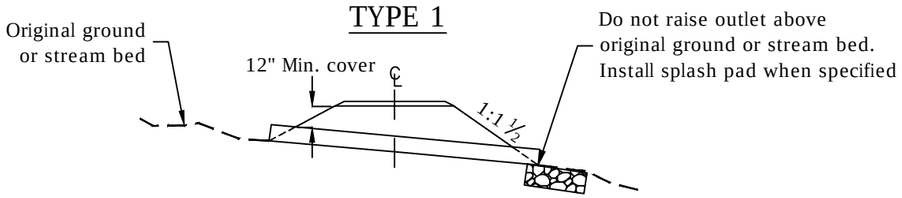

TYPE 2

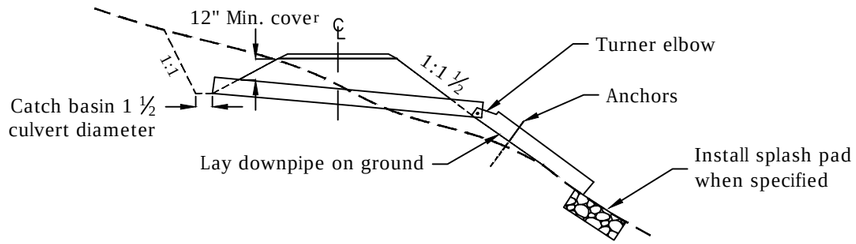

TYPE 3

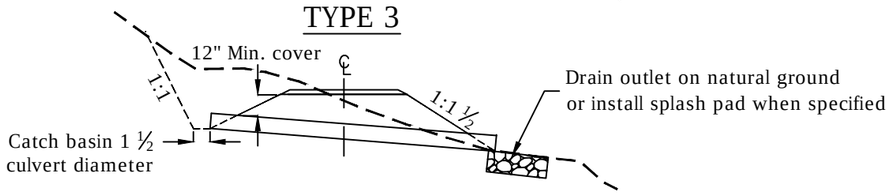

Some installations of culverts may require additional excavation below grade line.

CULVERT SURFACE ROCK REPLACEMENT

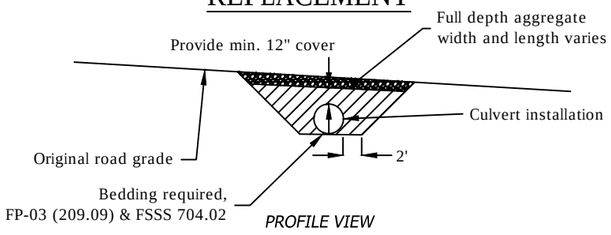

Note: Top width dimension is 12' unless noted otherwise

CATCH BASIN DETAIL

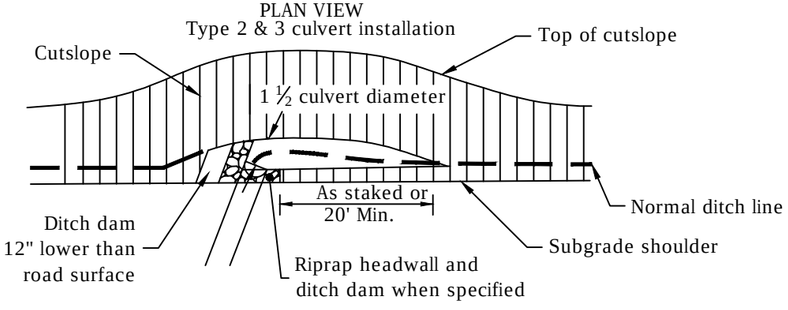

CULVERT OUTLET DITCH

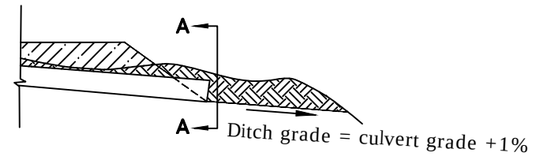

CULVERT OUTLET DITCH SECTION A-A

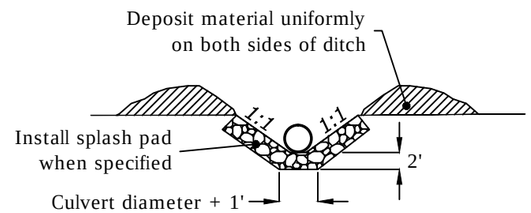

Note: Place mulch on berm

PARTIAL BEVELED INLET DETAIL

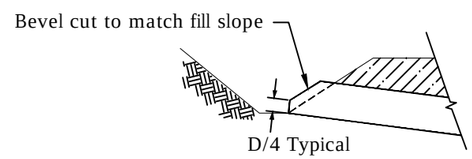

Note: Bevel culverts as specified

TURNER ELBOW DETAILS FOR PLASTIC PIPE

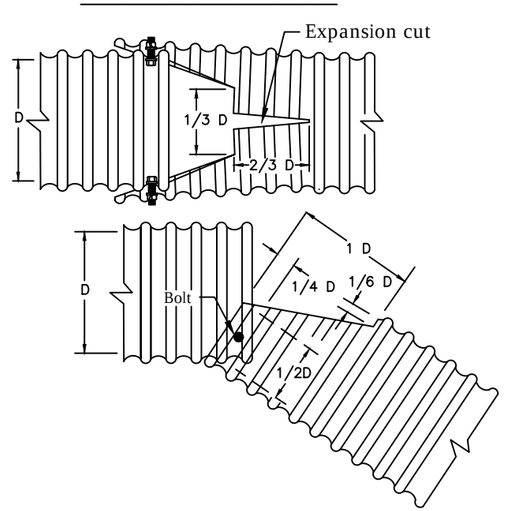

SPLASH PAD PLAN VIEW

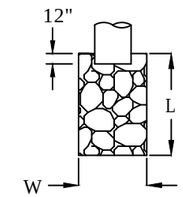

SPLASH PAD ELEV. VIEW

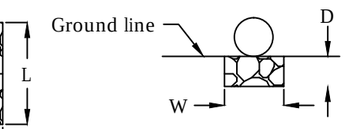

RIPRAP HEADWALL

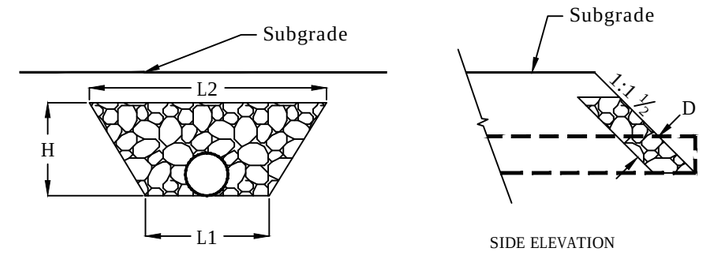

BOLT DETAIL FOR PLASTIC PIPE

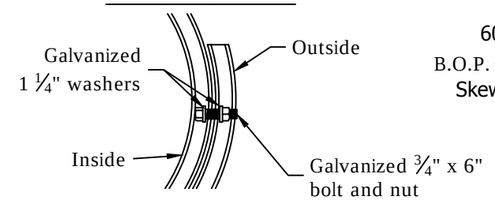

SKEW DIAGRAM

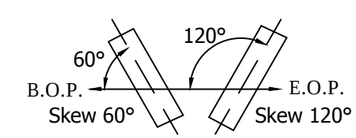

ANCHOR DETAILS

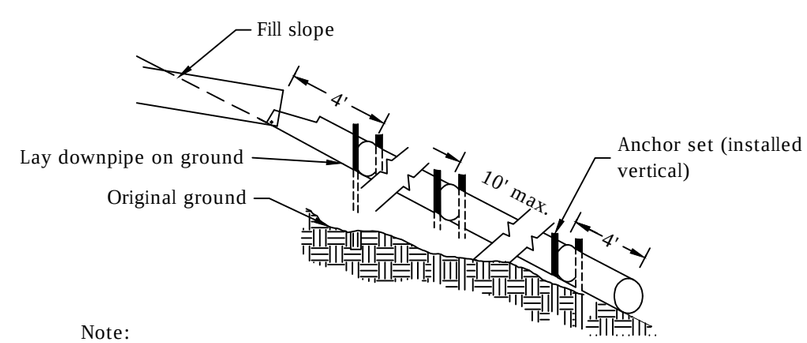

Note:
Elbows and anchors are indirectly included in the pay item for the corresponding outlet pipe. Anchors sets consist of two steel 6 ft fence posts (AASHTO M 281) and no. 9 galvanized wire. Drive posts a minimum 2 ft into the ground. Provide 3 strands of wire twisted together and encompass the entire circumference of the pipe and fence posts.

Drawing not to scale

BUTU 1 SPECIFIED ROADS

DRAINAGE CONSTRUCTION TYPICALS

PACIFIC NORTHWEST REGION

U.S.D.A. FOREST SERVICE

SHEET NUMBER	TOTAL SHEETS
20	23

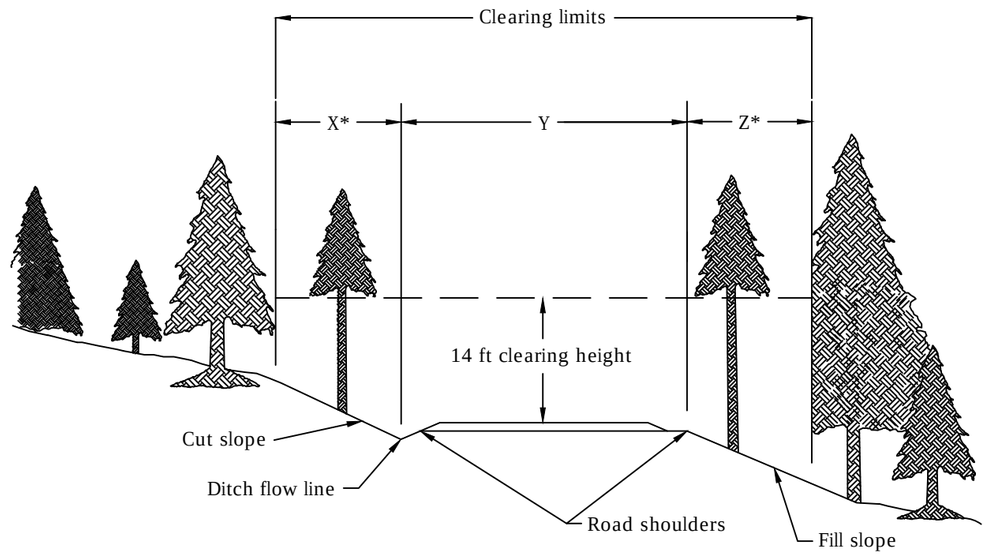

ROAD NUMBER	BEGINNING STATION/ MILE POST	ENDING STATION/ MILE POST	* (FT)
11	42.39	49.00	5
1164	0.00	1.46	3
1168	8.26	9.86	3
1168-470	0.00	1.25	2

NOTES:
1. Drawing not to scale.
2. Clear and grub all trees and stumps within "X, Y, and Z". Trees greater than 6 inches at 4.5' above the ground within "Z" can remain.
3. Cut other vegetation to a maximum height of 6" above the ground surfaces within "X, Y, and Z".
4. Limb trees to 14' above the traveled way surface.

BUTU 1 SPECIFIED ROADS

CLEARING AND GRUBBING TYPICAL

PACIFIC NORTHWEST REGION

U.S.D.A. FOREST SERVICE

SHEET NUMBER	TOTAL SHEETS
21	23

TYPICAL SECTION

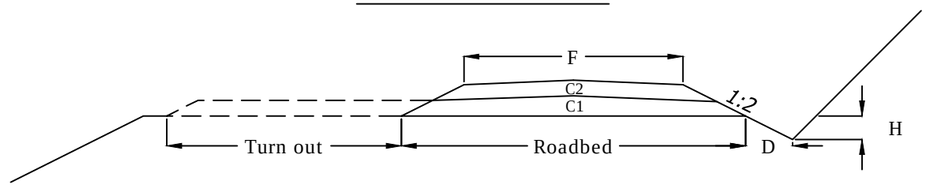

SURFACE ROCK PLACEMENT

ROAD NUMBER	BEGINNING MILE POST	ENDING MILE POST	CONSTRUCTION TOLERANCE	OUTSLOPED INSLOPED CROWNED	ROADBED WIDTH (FT)	DITCH DIMENSIONS (FT)		PAVEMENT STRUCTURE						REMARKS
								TRAVELED WAY WIDTH (FT)	GRADATION		COMPACTED DEPTH (IN)		SLOPE RATIO AGG	
				%		D	H	F	C1	C2	C1	C2	V:H	
1164	0.00	1.46	D	3 C	13.3*	2	1	12	Gov. Stockpile	-	4	-	1:2	For roadway reconditioning and 4-inch aggregate placement.
1168-470	0.00	1.05	D	3 C	13.3*	2	1	12	NA	-	-	-	-	For roadway reconditioning. No ditch required after MP 1.05.
1168-470	1.05	1.25	D	3 O	13.0*	NA	NA	12*	Gov. Stockpile	-	6	-	1:2	For 6-inch aggregate placement.

* Dimensions may be adjusted by the Contracting Officer to fit field conditions.

Drawings not to scale

BUTU 1 SPECIFIED ROADS

RECONSTRUCTION DETAILS

PACIFIC NORTHWEST REGION

U.S.D.A. FOREST SERVICE

SHEET NUMBER 22

TOTAL SHEETS 23

TYPICAL DISPOSAL AREA WITH VERTICAL FACE

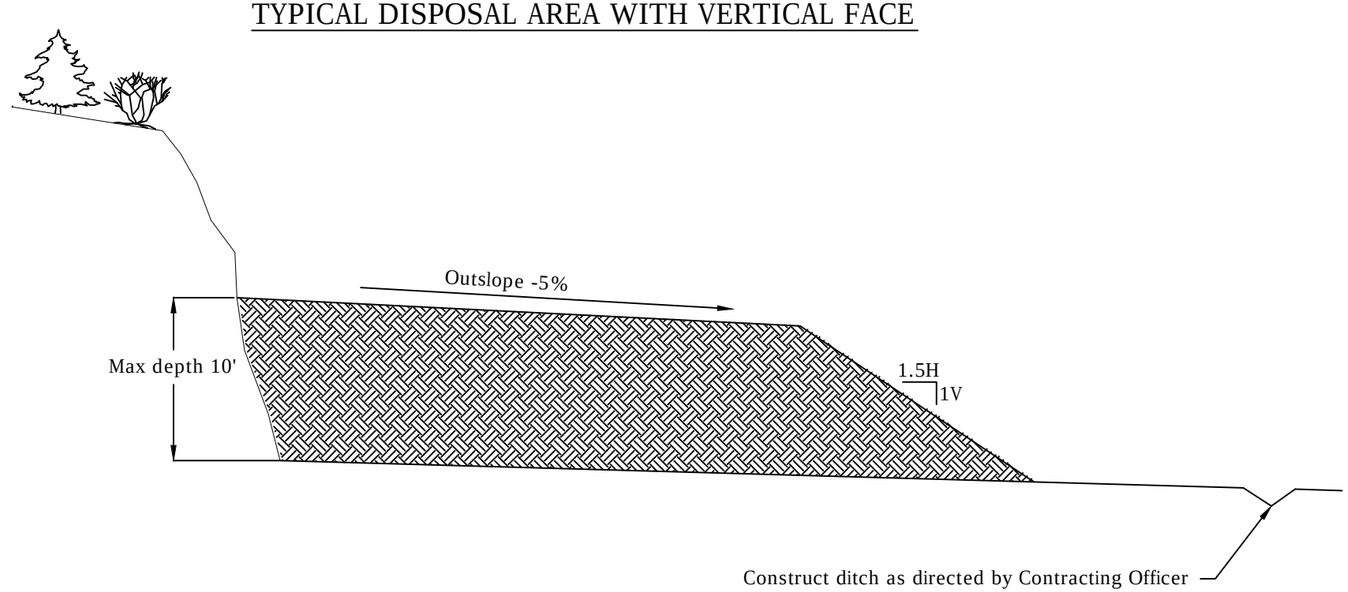

TYPICAL DISPOSAL AREA WITH OPEN AREA

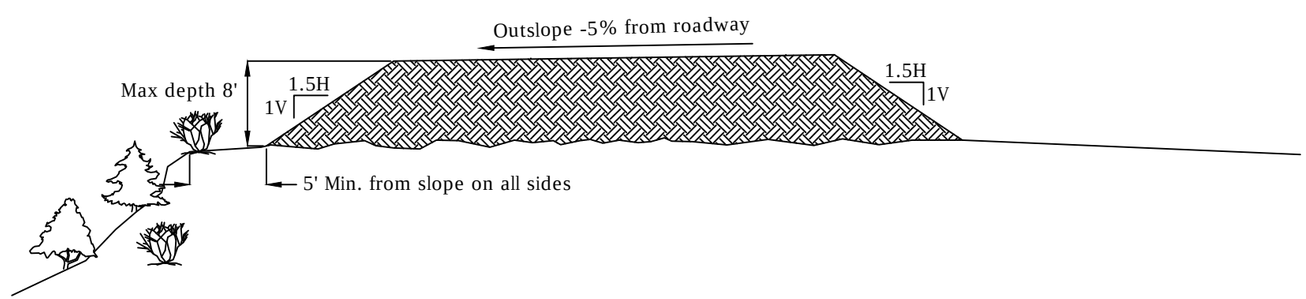

NOTES:
1. Disposal area limits to be staked by the Contracting Officer.
2. Mulch the disposal material.
3. Drawings not to scale.

BUTU 1 SPECIFIED ROADS

DISPOSAL TYPICALS

PACIFIC NORTHWEST REGION

U.S.D.A. FOREST SERVICE

SHEET NUMBER	TOTAL SHEETS
23	23