UNITED STATES DEPARTMENT OF AGRICULTURE
FOREST SERVICE
PACIFIC SOUTHWEST REGION FIVE

PLUMAS NATIONAL FOREST

REFUGE STEWARDSHIP PROJECT

MT. HOUGH RANGER DISTRICT

SAMPLE

STATE OF CALIFORNIA

INDEX MAP

LEGEND

- 80 INTERSTATE HIGHWAY
- 395 U.S. HIGHWAY
- 89 STATE HIGHWAY
- 120 PRIMARY FOREST ROUTE
- 511 COUNTY ROAD

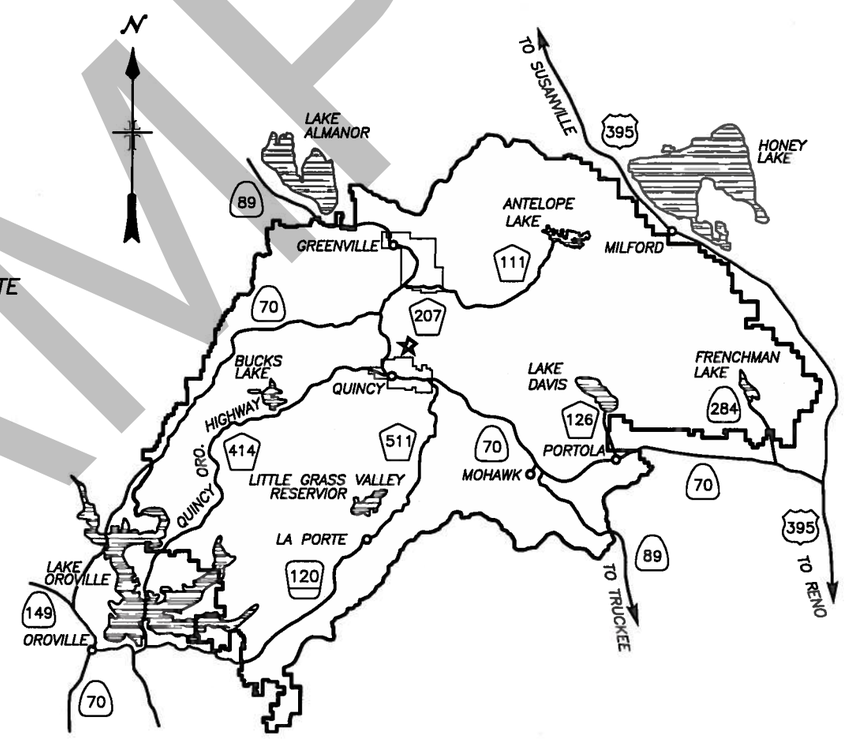

PLUMAS NATIONAL FOREST

★ PROJECT LOCATION

INDEX TO SHEETS	
1	TITLE SHEET
2	LOCATION MAP
3	SUMMARY OF QUANTITIES
4	LEGEND
5	CLEARING & CONST. TYPICAL
6	ROLLING DIP & WATERBAR TYP.
7	CULVERT INSTALL. TYPICAL
8	WORK LIST 25N73
9	WORK LIST 25N73
10	WORK LIST 25N73B

FOREST SERVICE U S DEPARTMENT OF AGRICULTURE

PREPARED BY: DAN HOPKINS
Dan Hopkins — DESIGNER'S TITLE — DATE 8/5/2015

REVIEWED BY: CRISTINA PEREZ
Cristina Perez — PROJECT ENGINEER — DATE 8/6/2015

APPROVED BY: PARVIZ NOORI
Parviz Noori — FOREST ENGINEER — DATE 8/11/2015

APPROVED BY: MICHAEL DONALD
Michael A. Donald — DISTRICT RANGER — DATE 8/18/15

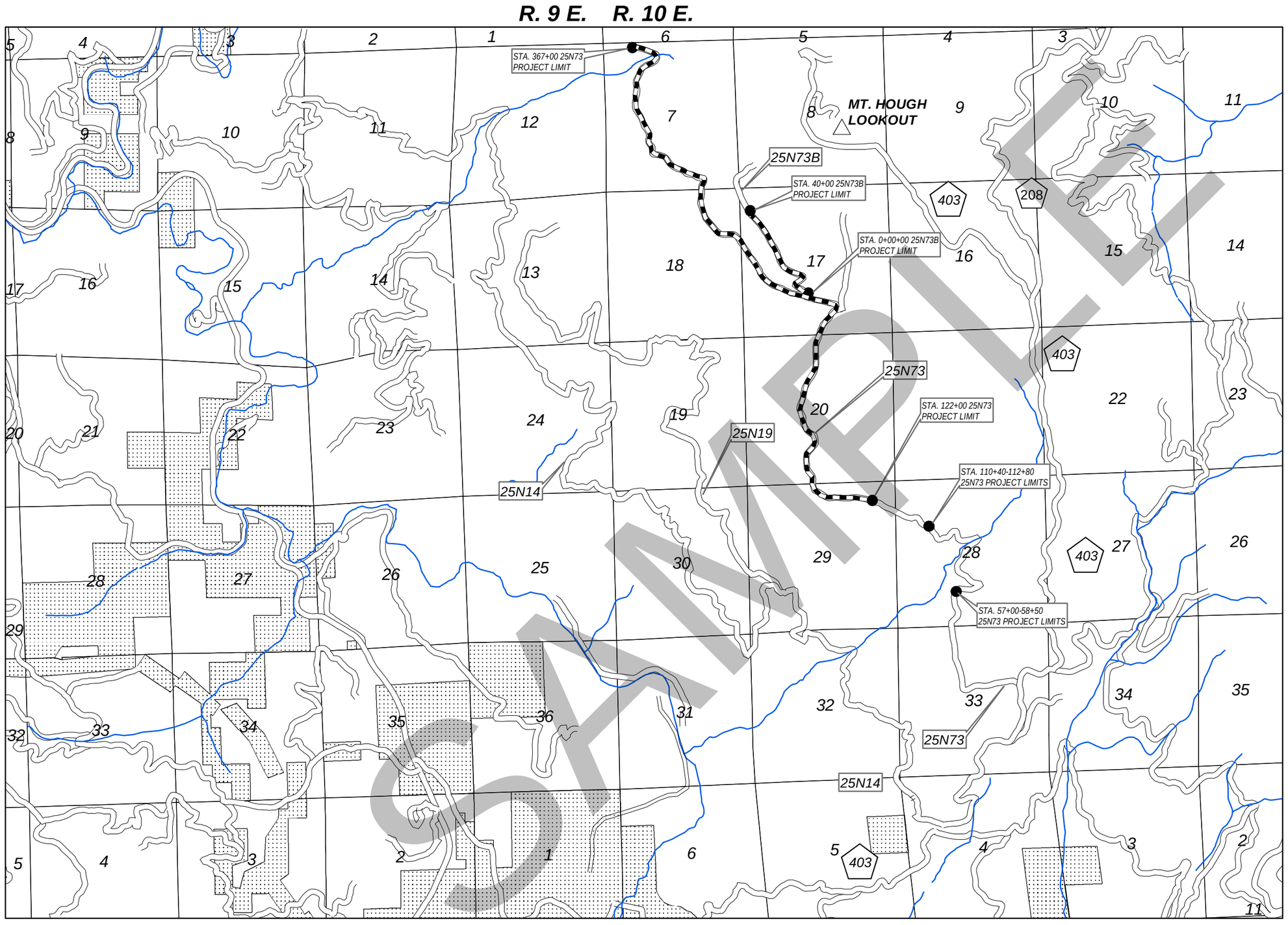

LEGEND

- EXISTING TRANSPO. ROAD
- ROAD RECONSTRUCTION
- NEW ROAD CONSTRUCTION
- 25N14 — FOREST SERVICE ROAD NUMBER
- 403 — COUNTY ROAD NUMBER
- PRIVATE PROPERTY
- NATIONAL FOREST
- OTHER OWNERSHIP
- W — WATER SOURCE
- DISPOSAL SITE
- GATE

N

U.S. DEPARTMENT OF AGRICULTURE
FOREST SERVICE
PLUMAS NATIONAL FOREST
QUINCY, CALIFORNIA

REFUGE STEWARDSHIP PROJECT

LOCATION MAP
NOT TO SCALE

DESIGNED:	D. HOPKINS	DATE:	8/15
DRAWN:	D. HOPKINS	DATE:	8/15
CHECKED:	C. PEREZ	DATE:	8/15

DATE	REVISION	BY

REFUGE RECONSTRUCTION
rf_location.mxd

SHEET NO. 2

SUMMARY OF QUANTITIES

ITEM	ITEM DESCRIPTION	UNIT	QUANTITY
(Reconst.)	ROAD 25N73		
201(02)	CLEARING AND GRUBBING, SLASH TREATMENT METHODS FOR TOPS & LIMBS 4; LOGS 4; STUMPS 4; UTILIZATION OF TIMBER 2	ACRE	2.29
201(07)	INDIVIDUAL REMOVAL OF TREES (HAZARD); SLASH TREATMENT FOR TOP[S & LIMBS 4; LOGS 4; STUMPS 4; UTILIZATION OF TIMBER 2	EACH	7
203(01)	EXCAVATION AND EMBANKMENT, METHOD 1	C.Y.	500
203(17)	DRAINAGE EXCAVATION TYPE; DIP	EACH	4
203(19)	DRAINAGE EXCAVATION TYPE; DRAINAGE DITCH	L.F.	2615
306(01)	RECONDITIONING OF ROADBED, COMPACTION D	CQ	4.71
601(01)	MOBILIZATION	L.S.	1
603(05)	18-INCH CORRUGATED STEEL PIPE, 0.64-INCH THICKNESS, METHOD A		
(Reconst.)	ROAD 25N73B		
201(02)	CLEARING AND GRUBBING, SLASH TREATMENT METHODS FOR TOPS & LIMBS 4; LOGS 4; STUMPS 4; UTILIZATION OF TIMBER 2	ACRE	0.37
203(01)	EXCAVATION AND EMBANKMENT, METHOD 1	C.Y.	600
203(17)	DRAINAGE EXCAVATION TYPE; DIP	EACH	17
203(19)B	DRAINAGE EXCAVATION TYPE; LEAD-OFF DITCH	L.F.	45
306(01)	RECONDITIONING OF ROADBED, COMPACTION D	MILE	0.76

SAMPLE

EXISTING TRANSPORTATION SYSTEM ROAD

SPECIFIED ROAD RECONSTRUCTION

SPECIFIED ROAD CONSTRUCTION

24N24 FOREST SERVICE ROAD NUMBER

89 STATE HIGHWAY ROAD NUMBER

112 112 PLUMAS COUNTY ROAD NUMBER

RIPRAP AND AGGREGATE SOURCE

W WATER SOURCE

OTHER OWNERSHIP

B BORROW SOURCE (IE. EARTH, SAND, ETC)

D DISPOSAL SITE

CATTLEGUARD

UNMERCHANTABLE DECKING AREA

MERCHANTABLE DECKING AREA

CONSTRUCTION SLASH DISPOSAL AREA

STUMP DISPOSAL AREA

OVERSIDE DRAIN

REINFORCED SUBGRADE

GATE

GUARDRAIL BARRIER

RIPRAP (ENERGY DISSIPATOR)

CONSTRUCT TURNAROUND

CONSTRUCT HAMMERHEAD TURNAROUND

CONSTRUCT TURNOUT

ROLLING DIP

WATERBAR

REINFORCED ROLLING DIP

LOW WATER CROSSING

STREAM

LEAD–IN, LEAD–OFF, OR DRAINAGE DITCH

CULVERT PIPE, PLAN VIEW

CULVERT PIPE, PROFILE VIEW

CULVERT PIPE, WITH CATCH BASIN

EARTH BARRIER

UNDER DRAIN (PMP) OR TEXTILE DRAIN

GABION BASKET

"P" (PRELIMINARY) LINE AS SURVEYED

"L" LINE – CENTER LINE TO BE CONSTRUCTED

OFFICE LINE

V.P.I. (VERTICAL POINT OF INTERSECTION)

RIGHT–OF–WAY LIMITS

SECTION LINE

CUT LINE } CONSTRUCTION LIMITS

FILL LINE } CONSTRUCTION LIMITS

FENCE LINE

EXISTING ROAD EDGE

BRIDGE

BERM

395 US HIGHWAY

CAMPGROUND

80 INTERSTATE HIGHWAY

SALESTAR

N NORTH ARROW

SAMPLE

U.S. DEPARTMENT OF AGRICULTURE
FOREST SERVICE
PLUMAS NATIONAL FOREST
QUINCY, CALIFORNIA

REFUGE STEWARDSHIP PROJECT

LEGEND

DESIGNED:	D. HOPKINS	DATE:	8/15
DRAWN:	D. HOPKINS	DATE:	8/15
CHECKED:	C. PEREZ	DATE:	8/15

DATE	REVISION	BY

DRAWING NAME LEGEND.DWG

SHEET 4

CLEARING

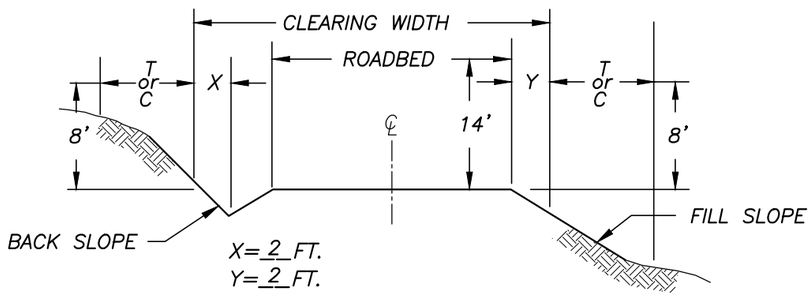

RECONSTRUCTION ~ DITCH SECTION

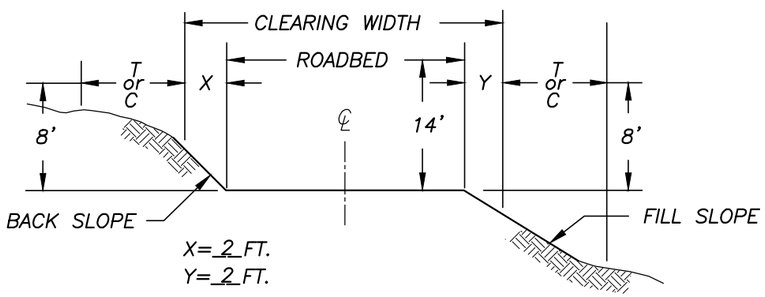

RECONSTRUCTION ~ NO DITCH

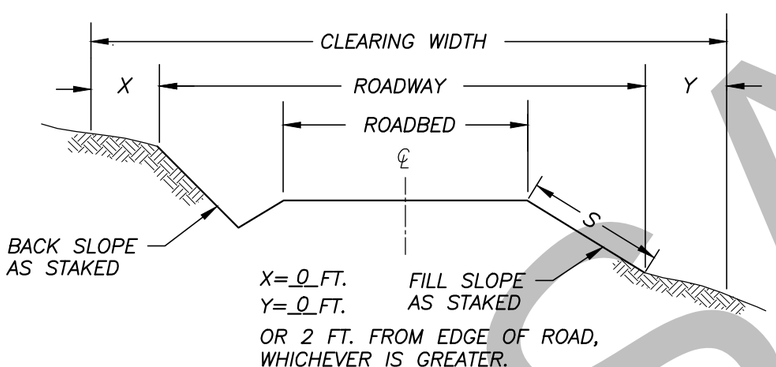

NEW CONSTRUCTION & NEWLY CONSTRUCTED SLOPES

NOTES:

1. ROADBED WIDTHS SHOWN ON PLAN AND PROFILE, OR WORKLIST PLANS, INCLUDE TURNOUTS AND CURVE WIDENING.
2. BLADE TO DAYLIGHT OR CONSTRUCT DRAINAGE DITCH, UNLESS OTHERWISE SHOWN ON PLANS. WHERE DAYLIGHT WILL EXCEED 5', CONSTRUCT DRAINAGE DITCH. WHEN AGREED, A DRAINAGE DITCH SHAPE MAY BE USED FOR LEAD-OFF DITCH.

A CROSS SLOPE OF 4% +/- 1%, SHALL BE USED FOR ALL SUPERELEVATED CURVES, AND FOR ALL INSLOPED, OUTSLOPED, OR CROWNED ROADBEDS.

SEEDING AND MULCHING AREAS SHALL CONSIST OF FILL SLOPES, SPECIFIED AREAS IDENTIFIED ON THE DRAWINGS, AND AREAS UNNECESSARILY DISTURBED OR REPEATEDLY USED DURING CONSTRUCTION. DIMENSION "S", ON NEW CONSTRUCTION AND NEWLY CONSTRUCTED SLOPES SHALL BE 6', OR TOE OF FILL, WHICHEVER IS GREATER.

A GRADER FINISH SHALL BE REQUIRED ON ALL PROJECTS. THE SUBGRADE SHALL BE VISIBLY MOIST DURING BLADING AND SHAPING OPERATIONS.

IN CLEAR OR TRIM SECTIONS, LEAVE STABLE TREES OVER 6" D.B.H..

ROADS CONSTRUCTED UNDER SECTION 203 SHALL USE CONSTRUCTION TOLERANCE CLASS K.

"C"=CLEAR "T"=TRIM

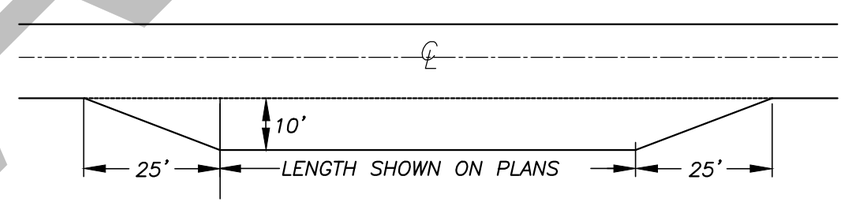

TURNOUT

CONSTRUCTION

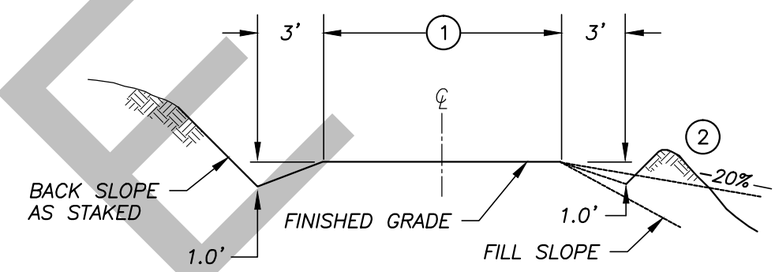

TYPICAL ROADWAY ~ DITCH SECTION

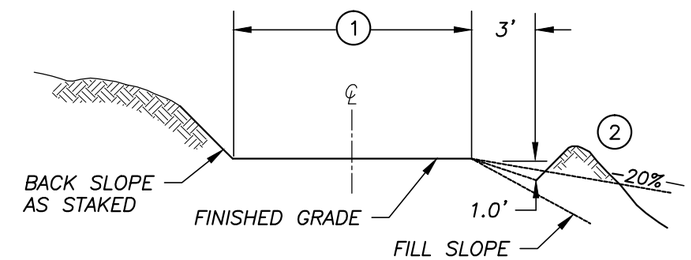

TYPICAL ROADWAY ~ NO DITCH

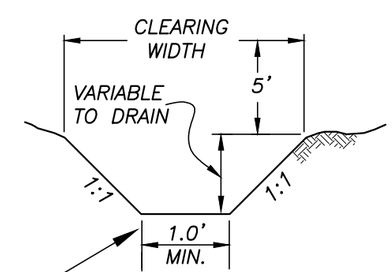

LEAD-OFF DITCH AND 2' FLAT-BOTTOM DITCH

DITCH BOTTOM WIDTH SHALL BE 2 FT. ON A 2 FT. FLAT-BOTTOM DITCH

SAMPLE

U.S. DEPARTMENT OF AGRICULTURE FOREST SERVICE PLUMAS NATIONAL FOREST QUINCY, CALIFORNIA	REFUGE STEWARDSHIP PROJECT	CLEARING & CONSTRUCTION TYPICAL	DESIGNED: D. HOPKINS DATE: 8/15 DRAWN: D. HOPKINS DATE: 8/15 CHECKED: C. PEREZ DATE: 8/15	DATE / REVISION / BY	DRAWING NAME ACAD.DWG SHEET 5

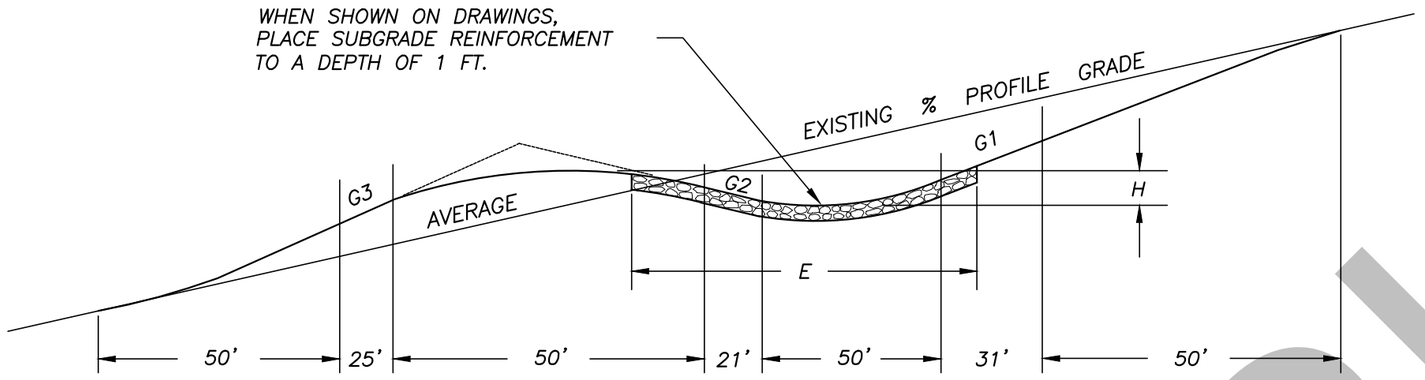

PROFILE VIEW

ROLLING DIP CONSTRUCTION DIMENSIONS						
% PROFILE GRADE	CONST. GRADE			DEPTH	REINFORCEMENT	
	G1	G2	G3	(H)	LENGTH (E)	CUBIC YARDS
0 TO 4	−7	2	−6	0.6'	20'	12
5 TO 6	−10	2	−9	0.6'	20'	12
7 TO 8	−13	2	−12	0.5'	20'	12
9 TO 10	−16	2	−15	0.5'	30'	18
OVER 10 % NOT RECOMMENDED						

ROLLING DIP CONSTRUCTION NOTES:

1. THE CROSS SLOPE OF THE ROADBED SHALL BE MAINTAINED THROUGH THE DIP.
2. THE DRAIN LINE SHALL BE PERPENDICULAR TO THE CENTER LINE OF THE ROADBED.
3. PLACE CLASS II OUTLET RIPRAP WHEN SHOWN ON THE DRAWINGS. REFER TO OUTLET RIPRAP DETAIL BELOW.
4. FOR DIPS ON AGGREGATE SURFACED ROADS, REDUCE (H) DEPTH BY 0.2 FT.
5. WATERBAR AND DIP CONSTRUCTION TOLERANCES SHALL BE IN ACCORDANCE WITH SUBSECTION 203.16; TOLERANCE CLASS A.

WATERBAR CONSTRUCTION NOTES:

1. WATERBARS ARE USUALLY CONSTRUCTED BY ANGLE DOZERS. WATERBARS SHALL HAVE A CLEAN OUTLET AND BE CONSTRUCTED SO THEY WILL NOT FAIL THROUGH ALL WEATHER USE.
2. THE WATERBAR DRAIN LINE SHALL BE SKEWED 5° TO 25°.
3. WATERBARS SHALL BE CONSTRUCTED SO THAT DRAINLINE EXCAVATION IS APPROXIMATELY SIX INCHES (6") INTO SOLID SOIL AND THE TOP OF COMPACTED WATERBAR IS TWELVE INCHES (12") ABOVE THE DRAINLINE.
4. THE TOTAL LENGTH OF THE WATERBAR SHALL NOT BE LESS THAN SIXTEEN FEET (16').
5. CROSS SLOPE OF THE DRAIN LINE SHALL BE EQUIVALENT TO TO THE CROSS SLOPE OF THE ROAD PLUS TWO PERCENT (2%).

OUTLET RIPRAP

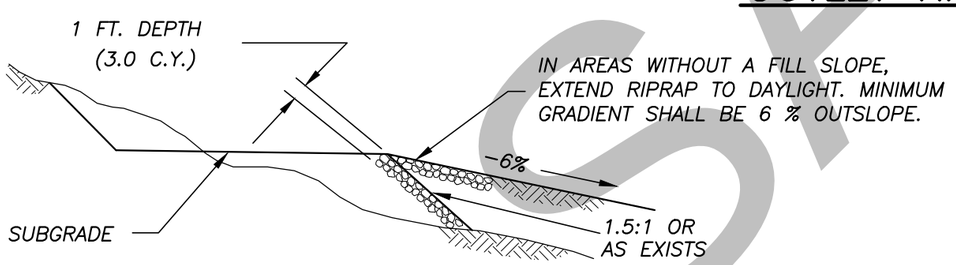

CROSS SECTION VIEW

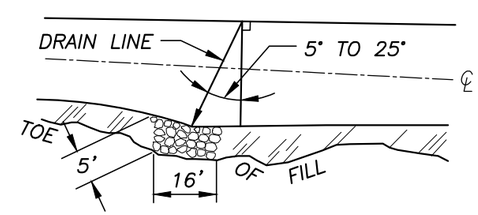

PLAN VIEW

REINFORCEMENT GRADATION	
SIEVE SIZE	% PASSING
12"	100%
2"	20−80%
3/4"	0−40%
# 200	0−10%

SAMPLE

U.S. DEPARTMENT OF AGRICULTURE
FOREST SERVICE
PLUMAS NATIONAL FOREST
QUINCY, CALIFORNIA

REFUGE MP
TIMBER SALE

ROLLING DIP
AND WATERBAR TYPICAL

DESIGNED: D. HOPKINS DATE: 8/15
DRAWN: D. HOPKINS DATE: 8/15
CHECKED: C. PEREZ DATE: 8/15

DATE	REVISION	BY
4/00		

DRAWING NAME
ACAD.DWG

SHEET 6

TYPICAL BEDDING AND EXCAVATION DETAILS

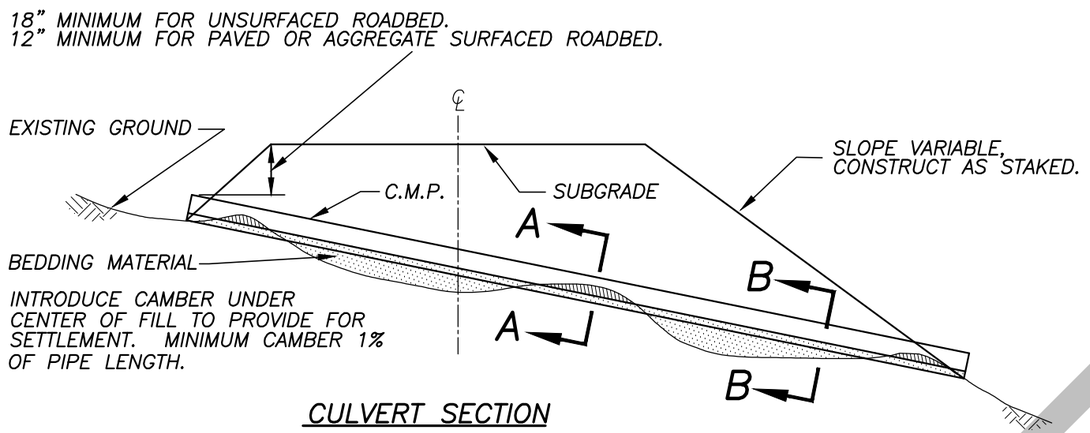

CULVERT SECTION

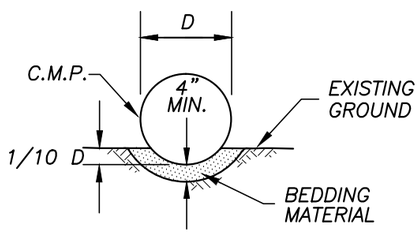

SECTION A–A

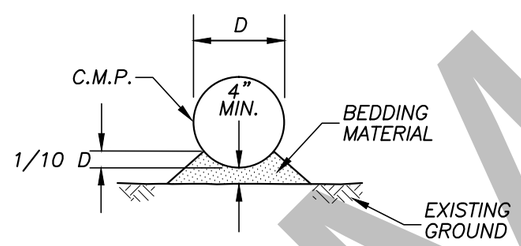

SECTION B–B

EARTH CATCH BASIN DETAILS

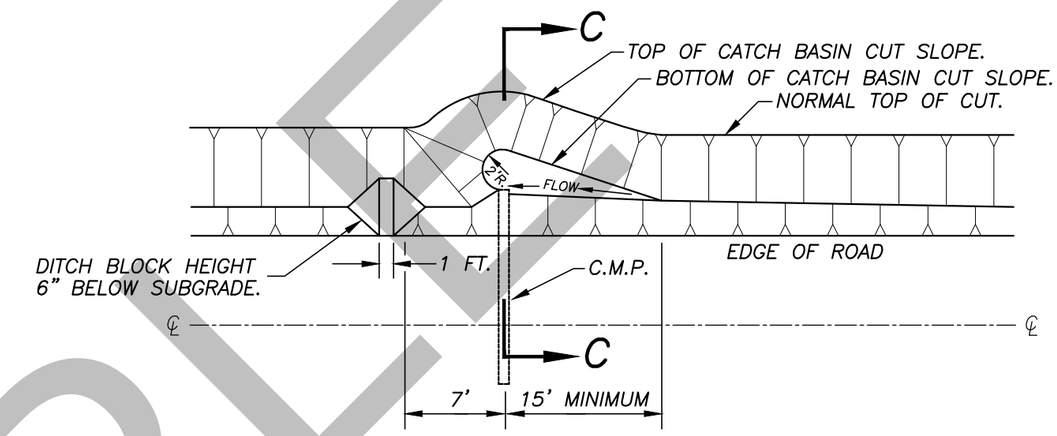

PLAN

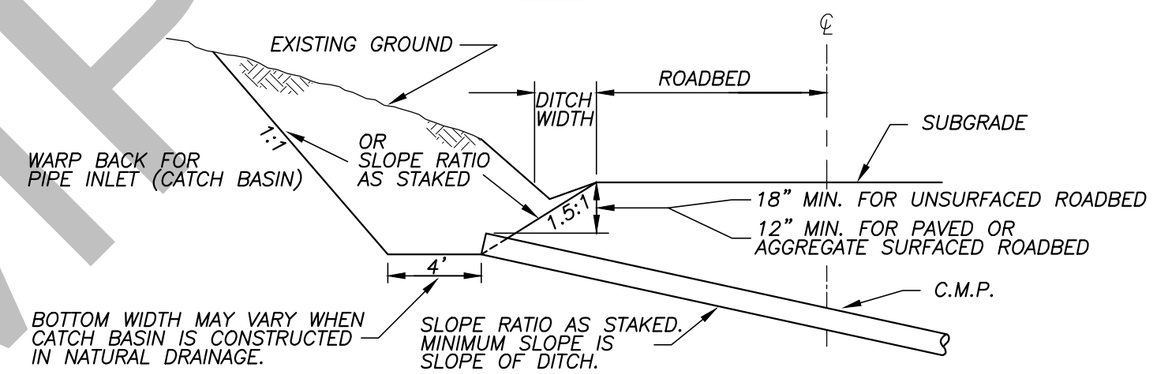

SECTION C–C

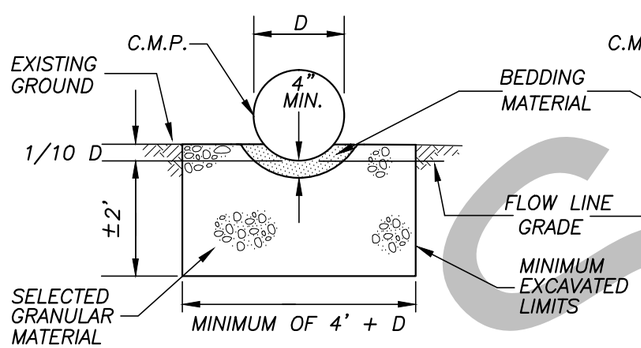

UNSUITABLE FOUNDATION

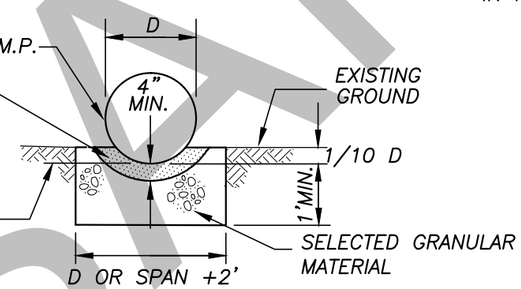

ROCK FOUNDATION

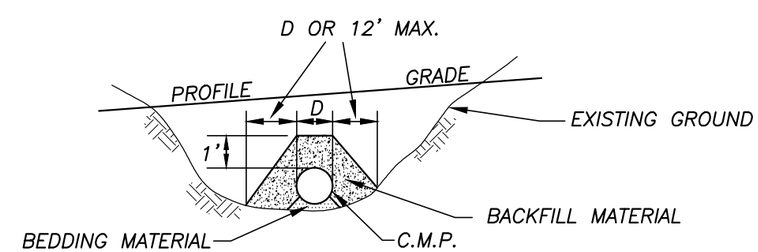

METHOD OF BACKFILLING PIPE

SAMPLE

U.S. DEPARTMENT OF AGRICULTURE
FOREST SERVICE
PLUMAS NATIONAL FOREST
QUINCY, CALIFORNIA

REFUGE MP THIN

CULVERT INSTALLATION
TYPICAL

DESIGNED:	D. HOPKINS	DATE:	8/15
DRAWN:	D. HOPKINS	DATE:	8/15
CHECKED:	C. PEREZ	DATE:	8/15

DATE	REVISION	BY

DRAWING NAME ACAD.DWG

SHEET 7

STATION	TO	STATION	WORK ITEMS ROAD 25N73
0+00			PROJECT LIMIT. INTERSECTION WITH PC 403.
0+00	-	57+00	NO SPECIFIC REPAIR WORK REQUIRED. MAINTAIN ROAD IN ACCORDANCE WITH SECTIONS 156, 158, AND PROVISION CT5.4.
57+00			PROJECT LIMIT. BEGIN RECONSTRUCTION.
57+00	-	58+50	RECONSTRUCT EXISTING ROADWAY IN ACCORDANCE WITH SECTIONS 201, 203, AND 306. THE TREATMENT FOR CONSTRUCTION SLASH SHALL BE METHOD 4 – SCATTERING. THE EXCAVATION AND EMBANKMENT SHALL BE METHOD 2 LAYER PLACEMENT. THE CONSTRUCTION TOLERANCE CLASS SHALL BE "K". THE FINISHED ROADBED WIDTH SHALL INCLUDE THE EXISTING TURNOUTS AND CURVE WIDENING. THE MINIMUM FINISHED ROADBED WIDTH SHALL BE 14 FEET. RECONDITION ROADBED AND ALL DRAINAGE STRUCTURE (INCLUDING ALL TYPES OF DITCHES, DIPS, DROP INLETS, AND CATCH BASINS) IN ACCORDANCE WITH SECTION 306.
110+40	-	112+80	
122+00	-	367+00	
57+00	-	58+50	WIDEN ROAD 5 FT. RT.AT 57+90. TAPER IN FROM 57+00 AND TO 58+50. BLEND SUITABLE EXCAVATED MATERIAL INTO ROADBED.
58+50	-	110+40	NO SPECIFIC REPAIR WORK REQUIRED. MAINTAIN ROAF IN ACCORDANCE WITH SECTIONS 156, 158, AND PROVISION CT5.4.
110+40	-	111+60	WIDEN ROAD 5 FT. RT. AT 110+90. TAPER IN FROM 110+40 AND TO 111+60. USE SUITABLE EXCAVATED MATERIAL AS FILL FOR WIDENING LT. (111+60-112+80).
112+35			EXTEND OUTLET OF 18" CMP 10 FT.
111+60	-	112+80	WIDEN ROAD 5 FT. LT. AT 112+35. TAPER IN FROM 111+60 AND TO 112+80.
112+80	-	122+00	NO SPECIFIC REPAIR WORK REQUIRED. MAINTAIN ROAD IN ACCORDANCE WITH SECTIONS 156, 158, AND PROVISION CT5.4.
122+00	-	153+00	OUTSLOPE ROADBED, LEFT.
123+35			RECONSTRUCT DIP, DRAIN LEFT.
126+60			EXISTING 18' CMP.
127+15			RECONSTRUCT DIP, DRAIN LEFT.
130+35			RECONSTRUCT DIP, DRAIN LEFT.
133+00			EXISTING 18" CMP.
134+20			RECONSTRUCT DIP, DRAIN LEFT.
137+10			RECONSTRUCT DIP, DRAIN LEFT.
138+80			RECONSTRUCT DIP, DRAIN LEFT.
157+80	-	158+80	CONSTRUCT TURNOUT LEFT, FINISHED ROAD WIDTH 24', INCLUDES 25' TAPERS AT EACH END.
158+80	-	184+00	OUTSLOPE ROADBED, LEFT.
163+00			RECONSTRUCT DIP, DRAIN LEFT.
166+00			RECONSTRUCT DIP, DRAIN LEFT.

STATION	TO	STATION	WORK ITEMS ROAD 25N73
174+50			RECONSTRUCT DIP, DRAIN LEFT.
177+20			RECONSTRUCT DIP, DRAIN LEFT.
190+75			RECONSTRUCT DIP, DRAIN LEFT.
193+50			RECONSTRUCT DIP, DRAIN LEFT.
194+75			NON- SYSTEM SPUR RIGHT.
194+90			EXISTING 18' CMP.
195+15			RECONSTRUCT DIP, DRAIN LEFT.
195+15	-	217+10	RECONSTRUCT DITCH, RIGHT.
199+50			RECONSTRUCT DIP, DRAIN LEFT.
199+75	-	200+75	CONSTRUCT TURNOUT LEFT, FINISHED ROAD WIDTH 24', INCLUDES 25' TAPERS AT EACH END.
200+75			EXISTING 18' CMP.
206+35			RECONSTRUCT DIP, DRAIN LEFT.
215+60			RECONSTRUCT DIP, DRAIN LEFT.
218+00			RECONSTRUCT DIP, DRAIN LEFT.
221+00			RECONSTRUCT DIP, DRAIN LEFT.
221+00	-	225+20	RECONSTRUCT DITCH, RIGHT.
228+70			25N73A AND NON-SYSTEM ROAD RIGHT.
239+00			25N73B RIGHT.
240+15			RECONSTRUCT DIP, DRAIN LEFT.
244+10			RECONSTRUCT DIP, DRAIN LEFT.
258+65			RECONSTRUCT DIP, DRAIN LEFT.
269+00			HAZARD TREE RIGHT.
269+80			RECONSTRUCT DIP, DRAIN LEFT.
273+75			RECONSTRUCT DIP, DRAIN LEFT.
281+00			RECONSTRUCT DIP, DRAIN LEFT.
281+10	-	282+10	CONSTRUCT TURNOUT LEFT, FINISHED ROAD WIDTH 24', INCLUDES 25' TAPERS AT EACH END.
283+00			RECONSTRUCT DIP, DRAIN LEFT.
284+70			HAZARD TREE RIGHT.

SAMPLE

STATION	TO	STATION	WORK ITEMS ROAD 25N73
288+70			HAZARD TREE RIGHT.
289+25			RECONSTRUCT DIP, DRAIN LEFT.
289+90	-	290+90	CONSTRUCT TURNOUT LEFT, FINISHED ROADWIDTH 24', INCLUDES 25' TAPERS AT EACH END.
290+25			HAZARD TREE LEFT.
291+75			RECONSTRUCT DIP, DRAIN LEFT.
293+15			RECONSTRUCT DIP, DRAIN LEFT.
301+15			RECONSTRUCT DIP, DRAIN LEFT.
304+74			EXISTING 36' CMP.
320+50			TWO HAZARD TREES RIGHT.
330+00	-	331+00	CONSTRUCT TURNOUT LEFT, FINISHED ROADWIDTH 24', INCLUDES 25' TAPERS AT EACH END.
346+00			RECONSTRUCT DIP, DRAIN LEFT.
348+50			RECONSTRUCT DIP, DRAIN LEFT.
348+75	-	350+90	WIDEN ROAD 6' LEFT. SPREAD SUITABLE MATERIAL, (APPROXIMATELY 160 CU. YARDS) OVER ADJACENT ROADBED TO UTILIZE. BLEND TO EXISTING ROAD.
354+10			RECONSTRUCT DIP, DRAIN LEFT.
359+40			RECONSTRUCT DIP, DRAIN LEFT.
363+00			HAZARD TREE RIGHT.
367+00			END SYSTEM ROAD. PROJECT LIMIT. END RECONSTRUCTION.

SAMPLE

STATION	TO	STATION	WORK ITEMS ROAD 25N73B
0+00			PROJECT LIMIT. INTERSECTION WITH ROAD 25N73 AT STA. 239+00.
0+00	-	39+00	RECONSTRUCT EXISTING ROADWAY IN ACCORDANCE WITH SECTIONS 201, 203, AND 306. THE TREATMENT FOR CONSTRUCTION SLASH SHALL BE METHOD 4 – SCATTERING. THE EXCAVATION AND EMBANKMENT SHALL BE METHOD 2 LAYER PLACEMENT. THE CONSTRUCTION TOLERANCE CLASS SHALL BE "K". THE FINISHED ROADBED WIDTH SHALL INCLUDE THE EXISTING TURNOUTS AND CURVE WIDENING. THE MINIMUM FINISHED ROADBED WIDTH SHALL BE 14 FEET. RECONDITION ROADBED AND ALL DRAINAGE STRUCTURE (INCLUDING ALL TYPES OF DITCHES, DIPS, DROP INLETS, AND CATCH BASINS) IN ACCORDANCE WITH SECTION 306.
0+00	-	8+00	OUTSLOPE ROADBED, LEFT.
0+00	-	1+25	WIDEN ROADBED 2' RIGHT AND 3' LEFT. FINISHED ROADBED 14 FEET.
0+25			REMOVE BOULDER RIGHT. PLACE ON FILL SLOPE OF ROAD 25N73 AT STA. 239+00.
2+10			RECONSTRUCT DIP, WITH 15' LEAD-OFF DITCH LEFT..
3+00			RECONSTRUCT DIP, DRAIN LEFT.
4+90			RECONSTRUCT DIP, DRAIN LEFT.
5+90			RECONSTRUCT DIP, WITH 10' LEAD-OFF DITCH LEFT.
7+10			RECONSTRUCT DIP, DRAIN LEFT.
8+05			RECONSTRUCT DIP, WITH 10' LEAD-OFF DITCH LEFT.
9+65			RECONSTRUCT DIP, DRAIN RIGHT.
11+85			RECONSTRUCT DIP, DRAIN RIGHT.
14+20			RECONSTRUCT DIP, DRAIN LEFT.
14+90			RECONSTRUCT DIP, DRAIN LEFT.
15+60			RECONSTRUCT DIP WITH 10' LEAD-OFF DITCH LEFT.
16+80			INTERSECTION WITH NON-SYSTEM SPUR ROAD RIGHT.
18+00			RECONSTRUCT DIP, DRAIN LEFT.
19+50			RECONSTRUCT DIP, DRAIN LEFT.
20+75			RECONSTRUCT DIP, DRAIN LEFT.
21+00	-	22+00	CONSTRUCT TURNOUT LEFT, FINISHED ROAD WIDTH 24', INCLUDES 25' TAPERS AT EACH END.
23+20			RECONSTRUCT DIP, DRAIN LEFT.
30+70			RECONSTRUCT DIP, DRAIN LEFT.
36+50			RECONSTRUCT DIP, DRAIN LEFT.
40+00			PROJECT LIMIT. END RECONSTRUCTION.,

SAMPLE