In-Depth Design and Maintenance Manual for Vault Toilets

Briar Cook, Civil Engineer
Program Leader, Recreation

Technology & Development Center
San Dimas, California

TE01A35
Technical Services, Recreation

The Forest Service, U.S. Department of Agriculture has developed this information for the guidance of its employees, its contractors, and its cooperating Federal and State agencies, and is not responsible for the interpretation or use of this information by anyone except its own employees. The use of trade, firm, or corporation names in this publication is for the information and convenience of the reader and does not constitute an endorsement by the U.S. Department of Agriculture of any product or service to the exclusion of others that may be suitable.

CONTENTS

INTRODUCTION 1

SECTION 1 CONDENSED DESIGN CRITERIA 3

THE VAULT 4
BUILDING INTERIOR FLOOR SURFACE 4
INTERIOR BUILDING WALLS AND CEILING 4
TOILET RISER 5
TOILET PAPER DISPENSER 5
LIGHTING 5
AIR VENT FOR THE BUILDING 5
THE VENT TO ASPIRATE ODORS OUT OF THE VAULT 5
PLACING THE BUILDING ON THE SITE (EXTREMELY IMPORTANT) 6

SECTION 2 IN-DEPTH EXPLANATION OF THE DESIGN CRITERIA 7

THE VAULT 8
Rationale to Support Using an Outside Cleanout 10
Materials for Vault Construction 11
BUILDING INTERIOR FLOOR SURFACE 14
INTERIOR BUILDING WALLS AND CEILING 15
TOILET RISER 15
TOILET PAPER DISPENSER 16
LIGHTING 17
VENTING INTRODUCTION 18
AIR VENT FOR THE BUILDING 22
THE VENT TO ASPIRATE ODORS OUT OF THE VAULT 23
PLACING THE BUILDING ON THE SITE (EXTREMELY IMPORTANT) 25

SECTION 3 GUIDELINES FOR THE MAINTENANCE AND OPERATION OF VAULT TOILETS 29

INTRODUCTION 30
STARTING UP AND MAINTAINING THE VAULT 30
PUMPING THE VAULT 31
CLEANING THE INTERIOR BUILDING FLOOR 32
CLEANING THE TOILET RISER 32
CLEANING THE BUILDING INTERIOR 32
MAINTAINING THE EXTERIOR 32
MAINTAINING THE VENT PIPE 33
BIOLOGICAL AND CHEMICAL ADDITIVES 33

SECTION 4 GUIDELINES FOR THE DESIGN OF A TWO UNIT TOILET 35

SECTION 5 GUIDELINES FOR THE DESIGN OF A FOUR UNIT TOILET 41

SECTION 6 MANUFACTURERS' NAMES AND ADDRESSES 45

SECTION 7 WHY EXISTING VAULT AND PIT TOILETS HAVE ODOR PROBLEMS 51

SECTION 8 AN INVENTORY OF TYPICAL VAULT TOILET CONTENTS 57

ILLUSTRATIONS

FIGURE NO.

1. DESIGN OF A TYPICAL VAULT 8

2. INSTALLATION OF A VAULT LINER 12

3. INSTALLATION OF THE BUILDING VENT 18

4. PLACING THE BUILDING VENT FOR UP-CANYON AND DOWN-CANYON WIND 20

5. SUN'S ENERGY CAUSING CONVECTION ON A SHROUD ENCASED PIPE 21

6. PLACING A COVER OVER A VENT PIPE 24

7. PREMANUFACTURED VAULT TOILET SYSTEM WITH CORRECT DESIGN FEATURES 27

8. PRECHARGING A VAULT WITH FRESH WATER AFTER PUMPING 30

9. FLOOR PLAN OF A TYPICAL TWO UNIT TOILET BUILDING 36

10. PLACING THE BUILDING VENTS IN A TWO UNIT TOILET BUILDING; BOTH DOORS ON THE SAME SIDE OF THE BUILDING 37

11. PLACING THE BUILDING VENTS IN A TWO UNIT TOILET BUILDING; DOORS ON OPPOSITE ENDS OF THE BUILDING 38

12. PLACING THE BUILDING VENTS IN A TWO UNIT TOILET BUILDING; BOTH DOORS ON SAME SIDE AND WIND AGAINST ONE SIDE 39

13. HOW TO FORCE THE WIND INTO THE DOWNWIND COMPARTMENT OF A TWO UNIT TOILET 40

14. PLACING THE BUILDING VENTS IN A FOUR UNIT TOILET BUILDING; ALL DOORS ON THE SAME SIDE OF THE BUILDING 42

15. FOUR UNIT TOILET BUILDING IN A SQUARE FORMAT (DO NOT BUILD) 43

16. SINGLE UNIT TOILET VENTING PROBLEMS WITH NO WIND 53

17. SINGLE UNIT TOILET VENTING PROBLEMS AS A RESULT OF WIND 54

18. TWO UNIT TOILET VENTING PROBLEMS WITH NO WIND 55

19. FOUR UNIT TOILET VENTING PROBLEMS AS A RESULT OF WIND 56

INTRODUCTION

No longer is it necessary to tolerate the obnoxious odors associated with previously designed vault and pit-type toilets. This manual will explain how to design, locate, and maintain the complete vault or pit toilet system so that the building interior (use area) is odor free and the entire system, from the bottom of the vault to the top of the vent, is acceptable to the visitor and easy to operate and maintain.

There are many names synonymous with this type of toilet system (as shown on the front cover). This design manual will refer only to vault and pit toilets.

A pit toilet simply has a hole in the ground with a building over it. All liquid waste drains down through the soil and all solid waste remains until the hole fills up.

A vault toilet has a sealed container buried in the ground with a building over it. All waste is contained until the waste is removed by pumping.

The design of both vault and pit toilet buildings are the same for odor control, maintenance, and service to the public.

IT IS IMPORTANT THAT ODORS ARE ATTACKED ON ALL FRONTS! This manual will show how to eliminate all sources of odors associated with vault and pit-type toilets.

This manual is divided into eight sections. Section 1 contains the condensed design criteria for those already familiar with vault and pit toilet design. Section 2 contains an in-depth explanation of the design criteria in conjunction with illustrations. Section 3 contains guidelines for the maintenance and operation of vault toilets. Section 4 contains guidelines for the design of a two unit toilet. Section 5 contains guidelines for the design of a four unit toilet. Section 6 contains manufacturers' names and addresses for the more common items used in vault and pit-type toilets. Section 7 contains an explanation of why the existing toilet building designs have an odor problem. Section 8 contains an inventory of typical vault toilet contents.

ALL BUILDINGS SHALL BE DESIGNED FOR PEOPLE WITH DISABILITIES.

THE PRINCIPLES SHOWN IN THIS MANUAL ALSO APPLY TO RETROFITTING ANY EXISTING VAULT OR PIT TOILET BUILDING.

American privies were the only toilets with a moon or star above the door. We have been told the moon meant it was for the ladies and a star would be for the gents. That way, anyone could stay out of trouble even if unable to read.

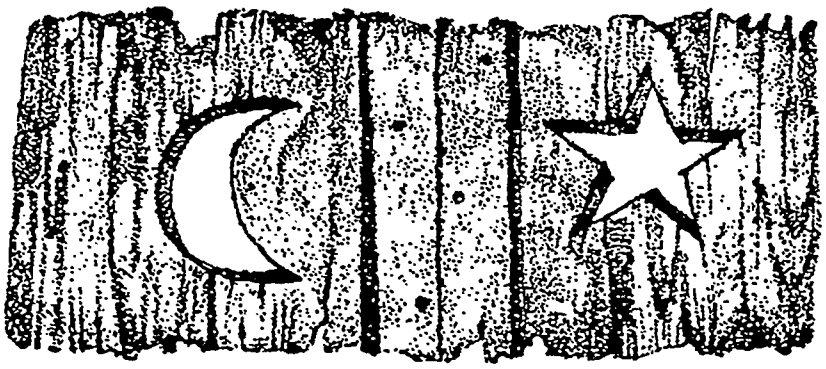

SECTION 1

CONDENSED DESIGN CRITERIA

THE VAULT

1. **There shall be one vault for each toilet riser.**

2. **All interior vault surfaces shall be sealed to prevent leaking and absorption of odors into the material used to construct the vault.** If the building floor slab is the top of the vault, then the underneath side of the floor slab (top interior of the vault) shall be sealed to prevent odor absorption.

3. **The vault shall have a black interior to help prevent the visitor from seeing the waste when looking down the toilet riser.** Do not use bituminous materials for coating the vault because that material is food for the bacteria.

4. **The vault shall have a bottom slope of 1 inch per ft from under the toilet riser out to the outside cleanout area so that the waste can be more thoroughly removed.**

5. **The vault shall have a 24-inch diameter (minimum) lightweight manhole cover installed to the rear or side of the building. The manhole cover must be sealed to prevent air and water from entering the vault. The manhole cover should be raised, with the surrounding concrete sloped away using a minimum slope of 1/2 inch per ft.** (Manhole covers are only for vault toilets, not pit toilets.)

6. **The size of the vault is determined by the amount of use at each site.** The size is usually 750 to 1,000 gal. For estimating purposes, 1,500 uses equals approximately 100 gal.

7. **The depth of the vault shall be no deeper than 4-1/2 to 5 ft.**

8. **The vault toilet pumping contractor should never be allowed to remove the contents of the vault through the toilet riser, inside the building.** Old vault toilets that have no outside cleanout are obviously excluded.

BUILDING INTERIOR FLOOR SURFACE

1. **The floor shall be sloped 1/2 inch per ft from the back to the front door so that water will not "pocket" and cleaning will be easier.**

2. **The floor shall be completely sealed to prevent any staining or odor absorption.**

3. **The floor shall have a non-slip surface <u>only</u> in the walkway area.**

4. **The wall to floor surfaces shall have a large radius coving (4 to 6 inches) and all 90° corners shall be rounded.**

5. **The floor shall evenly join the outside concrete so that there is no lip at the doorway to hinder the people with disabilities from entering.**

INTERIOR BUILDING WALLS AND CEILING

1. **The walls shall be nonporous.**

2. **The walls shall be light in color to assist in reflecting available light.**

3. **The walls shall be difficult to write on or designed to be easily cleaned.**

4. **The walls shall be free from ledges, angles, and shelves so that less dirt accumulates and cleaning is easier.**

5. **Each building shall have an insulated ceiling so that the interior of the building is not heated by the sun shining on the roof.**

6. **The building walls should be reinforced to allow firm attachment of any type of toilet paper holder/dispenser and grab bars for people with disabilities.**

TOILET RISER

1. **The riser shall have no cracks and crevices on the outside for potentially odorous materials to collect in.**

2. **The riser shall have a heavy-duty open front seat and cover assembly that does not seal the air out.**

3. **The riser shall be easy to clean and impervious to oxidizing cleaning agents.**

4. **The riser shall be vandal resistant.**

TOILET PAPER DISPENSER

1. **If the vault or pit toilet building is located where there will be no people with disabilities, then use either the three-roll lock-bar dispenser or the mile-long (continuous roll) dispenser.**

2. **If the building is located for people with disabilities, then consider using the mile-long (or continuous roll) dispenser.**

LIGHTING

1. **Lighting within the building shall be adequate for the visitor to comfortably function, but not directed in such a way that the visitor can see the waste in the vault.** Do not use overhead skylights.

2. **Polycarbonate (LEXAN) windows shall be used in place of glass or thin plastics to help prevent breakage as a result of vandalism.** Fiberglass is not recommended because when damaged, the resulting splintering fibers could be a hazard.

3. **To maintain privacy, LEXAN shall be translucent or covered with translucent louvers.**

AIR VENT FOR THE BUILDING

1. **The vent in the building, necessary to supply replacement air for the air drawn out of the vault, shall be around 120 sq inches of free area for a single unit toilet.**

2. **There shall be <u>only one</u> vent opening in the building. The opening shall be placed only on one side of the building (the side that the prevailing wind blows against).** The "side" can be either side, or the front or back of the building.

3. **The vent shall be located "head-high" on the building if there is a constant prevailing wind hitting that side. For shifting winds, the vent shall be placed as low to the ground as possible and on the side that the wind is most predominant during the use period. If there is an up-canyon wind in the morning and a down-canyon wind during the afternoon, then the vent shall be placed on an adjacent wall surface as low to the ground as possible so that the wind has the least effect of aspirating air out of the building.**

4. **The vent shall be constructed of a heavy-duty material, such as expanded metal, in order to prevent vandalism.**

5. **There shall be no screen in the vent opening unless the size is 1/4-inch mesh (least dimension).**

VENT TO ASPIRATE ODORS OUT OF THE VAULT

1. **The vault vent shall be a minimum of 12 inches in diameter. Each vault shall have its own vent.** The 12-inch size is for single unit toilets only.

2. **The top of the vent pipe shall be a minimum height of 3 ft above the highest point of the roof.**

3. **The 12-inch diameter pipe above the roof shall be painted a dark color to take advantage of potential convection resulting from the sun's energy as the sun heats the pipe.** This effect is minimal, but everything helps.

4. **The top of the 12-inch pipe shall remain uncovered and unscreened.** If a top is absolutely necessary, it should be a flat plate placed 12 inches above the top of the pipe and supported by three thin metal rods so as not to interfere with the aspiration aspects of the wind flowing over the open top pipe.

PLACING THE BUILDING ON THE SITE

NOTE: A BUILDING THAT IS CORRECTLY DESIGNED, IN ALL ASPECTS, WILL NOT FUNCTION PROPERLY UNLESS IT IS LOCATED PROPERLY IN THE FIELD!

1. **The building shall be placed to take advantage of the wind flow or the sun's energy, preferably both.**

2. **The building shall not be placed in a hollow, beneath an overhang, on the lee side of a ridge, immediately adjacent to a dense tree line, or in dense brush and/or trees. Both the building location and orientation are important.**

3. **Place the building so that odors emitted from the vent stack will not affect campground spurs, group use areas, boat launch areas, etc.**

4. **Do not place two single unit or two two-unit toilet buildings close together and in line with the wind.**

SECTION 2

IN-DEPTH EXPLANATION OF THE DESIGN CRITERIA

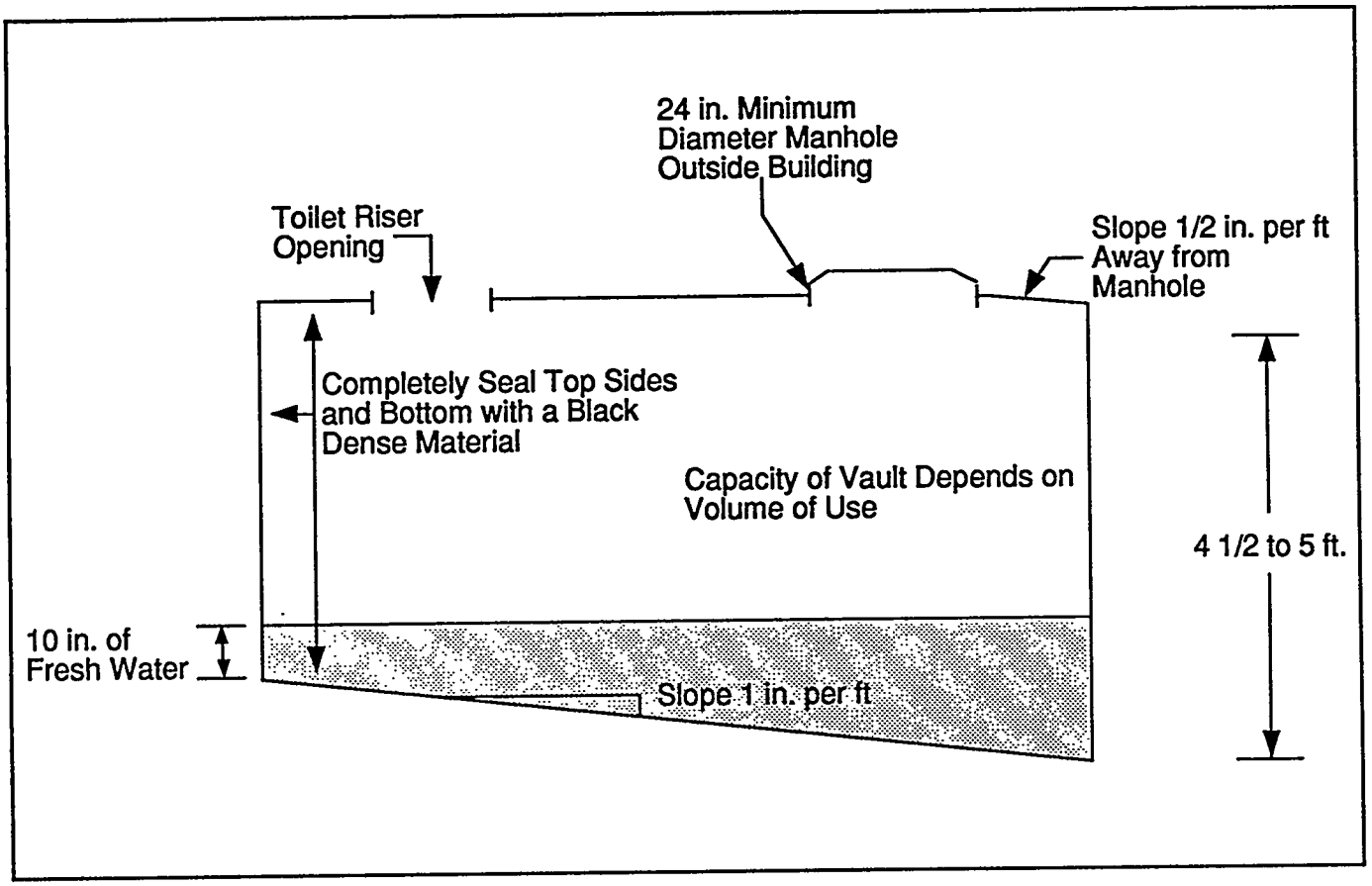

Figure 1

THE VAULT

The following is a discussion of the vault design criteria.

1. **There shall be one vault for each toilet riser.**

The objective of properly venting a toilet is to have the air inside the building go down the toilet riser into the vault and then go out through the 12-inch diameter vault vent. If there are two toilet risers over one vault, then a cross flow of air can occur and odor can be forced up into the building use compartment. (See venting for further details.)

2. **All interior vault surfaces shall be sealed, to prevent leaking and absorption of odors into the material used to construct the vault.**

If the vault leaks then there is a potential of contaminating the surrounding water table or nearby lake or stream.

Any loss of liquid allows the solid waste to be exposed on the surface of the vault contents. When solids are exposed, the odors increase, and more importantly, flies begin their breeding cycle.

If the vault is constructed out of concrete and not completely sealed, odors will absorb into the concrete. When the vault is pumped, cleaned out, walls washed down, and precharged with fresh water, there will be no change in odor problem because of the odors being emitted from the walls of the vault. This is a major source of odor! Odors should be eliminated from all sources so that the overall use of the toilet is enhanced. The bottom (underneath side) of the building floor should also be sealed to prevent odor absorption.

3. **The vault shall have a black interior to help prevent the visitor from seeing the waste when looking down the toilet riser.**

This is an aesthetic consideration and parallels the saying "out of sight, out of mind." Vault toilet waste can be very offensive to the eye and everything should be done to prevent the visual impact. If there is no odor in the toilet use compartment and the visitor cannot see the toilet contents, then the experience is considerably more tolerable.

Bituminous coatings should not be used because they remain semi-soft and waste will cling to the sides of the vault as the waste is being pumped. This semi-soft material makes it difficult to remove the waste by hosing or scrubbing the walls. These coatings are also food for the sewage bacteria.

4. **The vault shall have a bottom slope of 1 inch per ft from under the toilet riser out to the outside cleanout area so that the waste can be more thoroughly removed.**

When the sewage pumper removes the waste from a flat bottomed vault, the hose will begin sucking air (vortexing) when there is about 2 to 3 inches of waste left. If there is not a sufficient amount of liquid to get the level down to 3 inches, then the hose will suck air long before that.

The objective of pumping any vault is to remove all of the contents (including cans, bottles, rocks, etc.).

By sloping the bottom of the vault and requiring that the pumper have a pressure water supply, virtually all of the contents can be removed because they will gravity flow down to the low end of the vault directly under the manhole. After pumping, the vault should then be recharged with 10 inches of fresh water (depth at shallow end). This precharged water will help to prevent the solid waste from mounding above the water level. Flies will not be able to breed and odors will be significantly reduced if a water level is retained.

5. **The vault shall have a 24-inch diameter (minimum) lightweight sealed manhole cover installed to the rear of the building. The manhole cover must be sealed to prevent air and water from entering the vault. The manhole cover should be raised, with surrounding concrete sloped away using a minimum slope of 1/2 inch per ft.** (Manholes are only for vault toilets.)

The 24-inch diameter will allow sufficient access for removing anything thrown down the toilet riser by the public and sufficient access for pumping the waste.

It is imperative that the manhole cover be completely sealed so that no air or water can enter the vault in order for the venting to work properly and prevent odors in the use compartment. The only air that should be allowed to enter the vault must be through the toilet riser. Another benefit to a sealed manhole is to prevent the obnoxious odors in the vault from escaping at ground level.

The manhole cover should be raised so that the concrete surrounding the cover can be sloped away with a minimum slope of 1/2 inch per ft. This will help prevent heavy rainfall from depositing dirt on top of the cover and leaking in excess water into the vault. Maintenance personnel dislike having to clean around the cover. If dirt accumulates, there is a good chance that when the cover is replaced it will not seal the air out.

6. **The size of the vault is determined by the amount of use at each site.** The size is usually 750 to 1,000 gal.

Each site has a different use pattern. The capacity of the vault should be designed so that the vault is pumped at least once at the end of the season. If the season happens to be all year long, then the capacity should be designed so that pumping occurs a minimum of three times each year.

Remember that we are trying to reduce odors at every place we can. Frequent pumping, thorough cleaning, precharging with fresh water, and using a vault that is completely sealed to prevent leaking and odor absorption will help greatly to alleviate odors.

As a design rule, it takes approximately 1,500 normal average uses to fill a 100-gal capacity. Generally the 750 or 1,000-gal size will be adequate for most recreation sites.

7. **The depth of the vault shall be no deeper than 4-1/2 to 5 ft.**

Normally the depth would be 4-1/2 ft under the toilet riser and 5 ft under the outside manhole. All the debris (cans, bottles, rocks, rags, etc.) has to be removed from the outside manhole. In order to make this obnoxious displeasing task as easy as possible, the depth of the vault should be as shallow as possible. However, too shallow brings the waste up too close to the toilet riser, so a compromise is necessary.

The 4-1/2 to 5-ft depth also makes it easier in case the pumper, after removing the sewage waste contents, has to go into the vault to remove the occasional large rock that cannot be removed by a clam rake. If the persons can lower themselves into the vault and stand in the vault with their head and shoulders out in the fresh air, then they will not be as reluctant to remove the rock or rocks. After pumping, they simply lower themselves into the vault, take a deep breath, lean over and get the rock, and then stand up and breathe fresh air.

This shallow depth also allows the pumper to more effectively control the end of the heavy suction hose resulting in a more thorough removal of the waste. By frequently repositioning the hose around the interior of the vault, more of the heavier sludge can be removed before all of the liquid is removed.

8. **The vault toilet pumping contractor should never be allowed to remove the contents of the vault through the toilet riser opening, inside the building.** Old vault toilets that have no outside cleanout are obviously excluded.

Rationale To Support Using An Outside Cleanout:

a. When the pumper (pumping through the riser opening on the inside of the building) removes the waste from a vault toilet, the suction hose gets clogged often. The hose is then removed to unclog the waste unless there is a reverse air flow on the suction hose allowing the pumper to force air out to unclog the hose. When the hose is removed and unclogged, the waste is usually spilled all over the floor and the waste adhering to the outside of the hose rubs on the floor and walls. This waste can soak into the floor and be a sanitary problem to our barefoot visitors, especially children, and can also cause lingering odor problems.

b. When debris such as cans, bottles, underwear, pinecones, etc., is removed from the riser opening, a few drops of stinky waste usually drips on the floor. After removing many pieces of debris, the floor is again saturated, causing the same sanitary and odor problem as above. Even if the floor is washed down after pumping, most of the waste (spilled during pumping) is washed out the front door. This waste is now at the edge of the concrete where it will attract flies and other insects. This is not a good way to greet our visitors!

c. When the vault floor is flat, the pumper cannot get all of the waste out of the vault because the hose will begin to suck air when it gets to about three inches deep. This odorous waste (odor is increased when the vault contents are stirred up and pumped) will stink for three days. Even if water is added the smell will still be bad. That is why the vault floor should be sloped 1 inch per ft from under the riser to the outside manhole so virtually all of the waste can then be removed.

d. Pumping through the riser opening is difficult. The pumper cannot control the end of the suction hose in the riser as well as through a 24-inch diameter manhole on the outside of the building. The riser opening is only 16 by 20 inches. When pumping through the riser, the hose has to be lifted and moved over as much of the bottom as possible in order to get the heavier sludge before all the liquid is gone. The larger the opening, the easier it is to reposition the hose.

e. The walls of the vault should be washed down during every pumping. This is very difficult to do through the riser opening because of the size of the hole and the closeness of the building walls.

f. If a large rock has to be removed, there are not many pumpers that will go down the small riser hole to remove it. However, lowering one's self down through the 24-inch diameter manhole is much easier and because it is located outside, the lighting and abundance of fresh air is much better.

g. When pumping occurs, the resulting increase in odor is obnoxious! When pumpers have to pump down through the riser opening inside the building, they are exposed to this intense odor without

any possible relief. Even in a properly vented system there will be odor associated with the pumping process and the pumper should not be exposed to this obnoxious smell.

There are those pumpers who will say that the odor goes along with the job and it does not bother them (typical macho image). When that particular pumper is no longer available, the new ones will probably not tolerate the smell on the inside when they know the pumping could be conducted from the outside. We should not expose any personnel, contract or our own, to such an adverse condition that we can control.

Let's look at some of the reasons why pumpers complain about the outside manholes. One of the reasons is because of our previous manhole design. Remember that the pumper is pumping our vaults to make money and time is money. If the pumper has to unscrew rusted bolts that are covered with dirt or mud and then wrestle a 100-lb cover and then clean out the dirt from the rim and the bolt holes before replacing the cover, the pumper would rather go down through the riser opening.

However, if we design the outside manhole properly, you will find the pumper will be more receptive to using the outside manhole for pumping. A proper manhole cover:

a. Should be hinged, or be round plastic which is easy to remove.

b. Should open against the back of the building (so that the cover is not in the way of pumping).

c. Should have the concrete surrounding the cover sloped away at a minimum slope of 1/2 inch per ft (so the rain will keep the cover clean and dirt will not be blown over the cover).

d. And, should be made out of lightweight aluminum or plastic.

The pumpers will also tell you that the majority of the solids lay directly below the riser (the impact zone) and they need to get the end of the suction hose into this concentration so that they do not pump out the liquids before getting most of the solids. However, if they are told that they need a large hoe to pull the impact zone out to the outside manhole and a clam rake (with 4 to 6 tines approximately 6 inches long and dulled on the ends) to remove the cans, bottles, etc., then they will be better equipped to do the job and more willing to pump from the outside. (More discussion on Page 31.)

A side benefit to the pumper is that by moving the impact zone, the concentration of waste is broken up and the chances of clogging the suction hose is reduced.

For all of the reasons given above, the pumping contract should clearly state that the pumper SHALL NOT USE THE TOILET RISER OPENING TO REMOVE THE WASTE.

Vertical access doors on the rear of the building are not as good for removing the waste as an outside manhole and are not recommended.

Materials For Vault Construction

There are a number of materials that the vault can be constructed with: cross-linked polyethylene; reinforced concrete block or concrete with a Hypalon liner; poured in place concrete; and prepoured concrete. The use of steel and fiberglass should be discouraged.

A discussion of each follows:

1. Cross-linked polyethylene. This is the best material currently available for the vault. It will not crack, chip, or peel in the harshest of weather conditions. There are currently two sizes available for burial; 750 and 1,000 gal. They are both specifically constructed to meet all of the correct design criteria (impervious, black, slope of 1 inch per ft on the bottom, a 24-inch diameter manhole and a depth of 4-1/2 to 5-ft deep).

2. Reinforced concrete block or concrete with a Hypalon liner. Concrete block, poured in place concrete,

or prepoured concrete can be lined with Hypalon or other equivalent synthetic rubber or plastic material. Using the Hypalon or other similar material (black only) will completely seal the concrete interior walls and floor.

REMEMBER TO SEPARATELY SEAL THE UNDERSIDE OF THE BUILDING FLOOR SURFACE TO PREVENT ODOR ABSORPTION. THE HYPALON MUST BE A MINIMUM OF 45 MIL, 3-PLY, POLYESTER-REINFORCED. ANY SIMILAR MATERIAL SHOULD BE EVALUATED FOR ITS STRENGTH AND RESISTANCE TO THE NORMAL WASTE MATERIALS.

During installation the liner should be cushioned on the bottom of the vault by placing 2 inches of sand between the concrete and the liner. (*See Figure 2.*) The liner should then be protected from damage (caused by bottles, followed by rocks and/or the end of the waste pumper's hose) by pouring a minimum of 4 inches of concrete over the liner. This concrete (type 5) does not have to be sealed on top to prevent odor absorption because it is always submerged, although sealing will certainly help to prevent deterioration.

NOTE: The 4 inches of concrete poured over the liner is not for preventing uplift pressures due to a high water table. Consult with engineering for that solution.

Hypalon can be ordered for any size vault. Simply measure the vault and send the dimensions to the manufacturer. If similar materials are used, you will have to check with that manufacturer for methods of application.

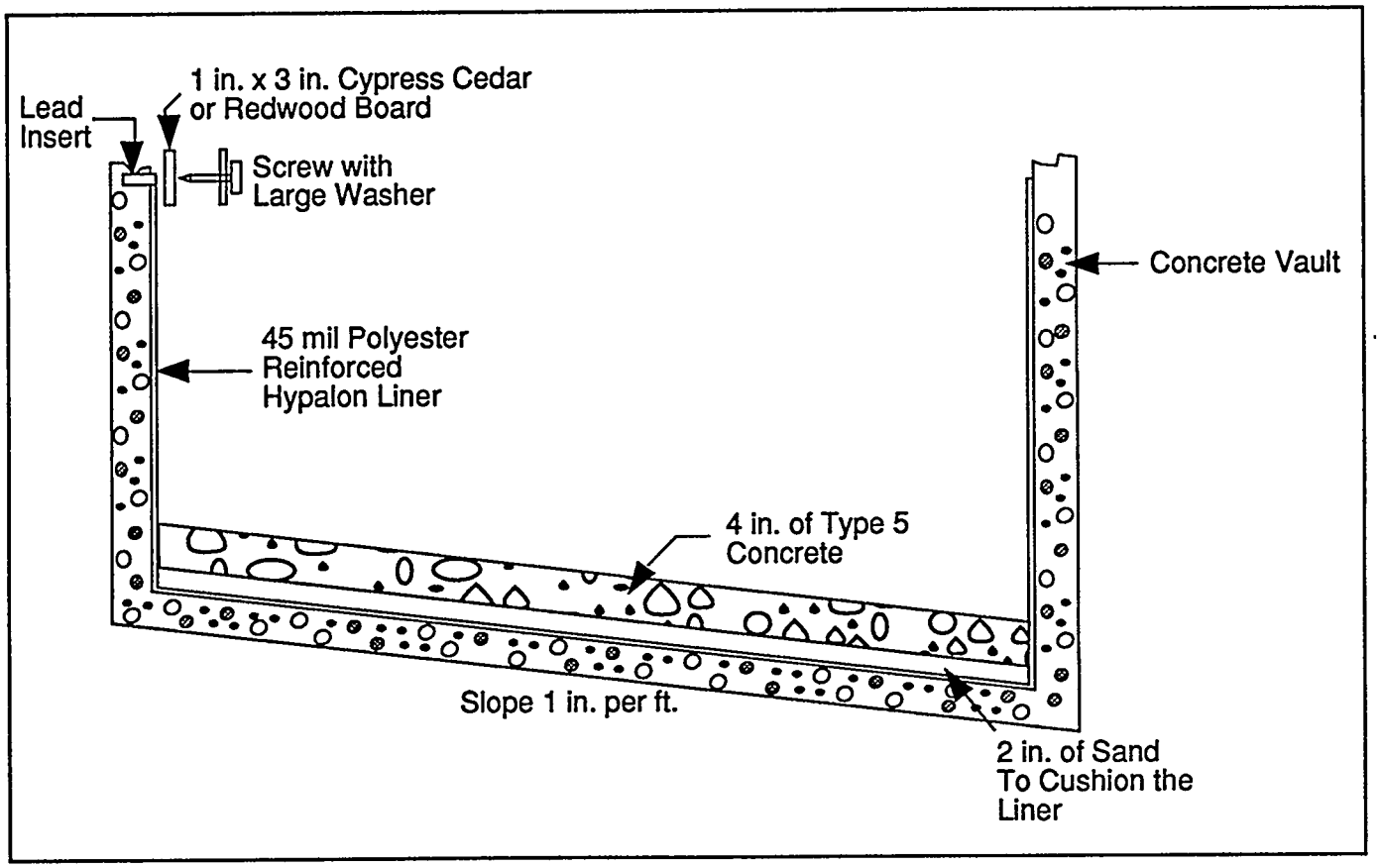

Figure 2

THE WASTE PUMPER SHOULD BE CAUTIONED TO BE CAREFUL OF TEARING THE LINER SIDEWALLS WITH HIS RAKES AND HOSES.

The only disadvantage of using a synthetic liner is if a rip or puncture does occur, it is very difficult to get someone to fix it.

3. Poured in place concrete. Poured in place concrete has been frequently used in the past. If this method is chosen please be alerted to the following concerns:

   a. Be certain that Type 5 concrete is used to prevent deterioration by alkali attack.

   b. Be certain that special caution is taken when placing the water seal system between the floor slab and the walls in order to prevent any possible leakage.

   c. Use a dense Type 5 concrete with reinforcing to prevent future cracking of the concrete.

   d. Thoroughly seal the concrete with a black material that the normal sewage bacteria will not eat and a material that is very hard and smooth for easy cleaning. Do not use an asphalt or bitumastic coating.

   e. Check with the manufacturer to be certain the coating will last for the lifetime of the toilet because it is difficult to find someone that will recoat the vault after it has been used.

4. Prepoured or precast concrete. This has been the most commonly used vault. There are some major difficulties with using prepoured or precast vaults.

   a. Normally, Type 5 concrete is not used.

   b. Normally, the purchaser does not inspect the quality of the concrete or the method in which it is poured.

   c. These vaults are hardly ever sealed with a long lasting quality sealant.

   d. They are heavy and difficult to install.

   e. Rarely does the vault have a 1 inch per ft slope in the bottom. I have never seen one. However, a sloped bottom can be added.

   f. Most are not designed for a 24-inch manhole to be placed to the rear of the building.

Unless all of the correct design features can be adhered to, do not use prepoured or precast concrete vaults.

5. Steel. Very few steel vaults have been used. Most of them are steel culvert pipes with concrete bottoms. Because of the difficulty of corrosion from the soil and from the sewage, steel vaults should not be used.

Lining a steel vault with a synthetic rubber or plastic material or coating will protect the interior from corrosion by the sewage, but will not protect the exterior from corrosion by the soil.

The exterior can also be coated, but it is too difficult to protect the coating from damage during backfilling operations. Coating both the inside and outside is also too expensive. The interior coating is also subject to damage from rocks dropped in the vault and from the steel end of the pumper's suction hose.Stainless steel vaults are simply too expensive and rarely come with a sloped bottom.

6. Fiberglass. Fiberglass vaults are fairly common and can be found all across the country. FIBERGLASS VAULTS ARE NOT RECOMMENDED. Some of the major concerns are as follows:

   a. There are a number of resins used to make fiberglass. Be certain that you specify an orthothalic resin. The other resins are more susceptable to being eaten by the normal bacteria found in sewage.

   b. If a large rock or the steel end of the sewage pumper's hose is dropped into the vault (this happens quite often) the bottom can be cracked or punctured and again, it is difficult to get someone to repair it.

c. Fiberglass is subject to stress cracking due to vibration during shipment and is subject to damage during handling, installation, future earth shifts, and extreme temperature differentials.

d. Generally fiberglass vaults are the most expensive.

BUILDING INTERIOR FLOOR SURFACE

1. **The floor shall be sloped 1/2 inch per ft from the back to the front door so that water will not "pocket" and cleaning will be easier.**

This is one of the most important design criteria in any vault or pit-type building! How many toilet buildings (of all kinds) have you been in, only to find liquid (origin unknown) standing on the floor? This is not an experience that we want our visitors to have to tolerate when the solution is simple.

The Uniform Federal Accessibility Standards, The California Accessibility Standards, and the Interagency Interim Design Guide for Accessible Outdoor Recreation agree that most floor surfaces should have a slope of 1:50 (2%) and ramps should not exceed 1:20 (5%). Cross slopes should also not exceed 1:50 (2%).

The suggestion of using a slope of 1/2 inch per ft (4.2%) on the floor of the building interior appears to be excessive until the alternatives are examined. Unless the floor is adequately sloped, liquid will be left standing on the floor. This liquid (of unknown origin) is very offensive to a wheelchair person because the wheels of the chair must go through it and can then be a potential contaminant to the person as they propel the wheelchair. Consequently, adequately sloping the floor is extremely important.

Due to normal construction practices a 1/4 inch per ft slope (2%) will not work to drain water effectively and it hasn't worked in the past. Remember that after you design the slope, someone else uses a trowel to finish the concrete and a 1/4 inch per ft slope is difficult to produce. There are <u>thousands</u> of toilet buildings that will verify this statement. ADEQUATE SLOPING IS CRITICAL!

2. **The floor shall be completely sealed to prevent any staining or odor absorption.**

This is also an important design criteria! As soon as the door is opened and the visitor sees stains on the floor, the toilet facility is perceived to be unsanitary. Any sealant that is used should be carefully evaluated and coordinated with the manufacturer to assure that it is relatively easy to apply and will withstand heavy traffic for a long period of time.

3. **The floor shall have a non-slip surface <u>only</u> in the walkway area.**

Cleaning any floor surface that has a non-slip surface is more difficult due to the roughness. To make cleaning the floor easier, do not put the non-slip surface at the rear of the toilet riser and keep it about one foot from the walls. The visitors do not walk in these areas, so a non-slip surface is not necessary. All broom finishes should be in the same direction as the floor slope so the water will drain better.

4. **The wall to floor surfaces shall have a large radius coving (4 to 6 inches) and all 90° corners shall be rounded.**

By coving the wall to floor surface and rounding all the 90° corners, there will be no areas for dirt and odorous materials to accumulate, thus making the floor surface easy to clean. When the interior is clean the perception is that the toilet is sanitary.

<u>Caution</u> - If the floor to wall surface is poured 90 degrees and the coving and rounded corners are then added, you will have many cracks (where the two surfaces meet). Odor causing materials will collect in these cracks.

5. **The floor shall evenly join the outside concrete so that there is no lip at the doorway to hinder the people with disabilities from entering.** This design criteria is self-explanatory.

INTERIOR BUILDING WALLS AND CEILING

1. **The walls shall be nonporous.**

It is important that the walls be nonporous so that over an extended period of time, odors do not absorb into the material.

2. **The walls shall be light in color to assist in reflecting available light.**

Lighting within the building should be sufficient for the visitors to properly function but not placed in such a way that they can see the contents of the vault. However, when the wall surfaces are light in color, the interior is perceived to be clean.

3. **The walls shall be difficult to write on or designed to be easily cleaned.**

In order to maintain an aesthetic interior, the walls should be difficult to write on. By reducing the writing you will also reduce the maintenance time. If the wall surfaces are similar to fiberglass reinforced plastic (FRP) or well painted, then they should be easily cleaned.

4. **The walls shall be free from ledges, angles, shelves, etc., so that less dirt accumulates and cleaning is easier.**

It is important to reduce the amount of time it takes to clean a toilet building. Each shelf, ledge, etc., that has to be cleaned takes valuable time.

5. **Each building shall have an insulated ceiling so that the interior of the building is not heated by the sun shining on the roof.**

There will be a certain amount of solar energy transfer through the walls of the building, but by far the largest amount of heat in a building comes from the sun shining on the roof. By installing an insulated ceiling, this additional heat buildup in the building is kept to a minimum.

When the interior of the building gets very warm, designers and field personnel are inclined to place vents in the upper walls to let this hot air escape. This is a mistake! In order to create proper venting there should be only one vent on only one side of the building. (See venting section.) So the best solution is not to allow heat to build up within the building.

6. **The building walls should be reinforced to allow the firm attachment of any type of toilet paper holder/dispenser and grab bars for people with disabilities.**

It takes very little time, and costs very little, to thoroughly reinforce the wall or walls that items will be attached to. Use 2-by 6-inch or 2-by 8-inch lumber to reinforce the wall. Reinforce a good portion of the wall so the installers will not have to guess where the reinforcing is.

TOILET RISER

1. **The riser shall have no cracks and crevices on the outside for potentially odorous materials to collect in.**

The objective of any toilet building interior is to maintain a clean, odor free environment. Toilet risers manufactured with cracks and crevices on the outside promote the collection of odor causing substances. Rarely do maintenance people take a small brush and disinfect these areas.

Because of this and other problems, the white (now commonly used) cross-linked polyethylene riser was developed. There are no cracks and crevices on the outside. The white color was chosen to simulate the color of the normal flush toilet found in most homes. The thought behind this was that the more familiar a person is with something, the less likely vandalism will occur. Also, white denotes cleanliness.

2. **The riser shall have a heavy-duty, open front seat and cover assembly that does not seal out the air flow.**

The open front seat allows a dynamic air flow (created by the wind entering the building and the 12-inch vent pipe aspirating it out of the vault) to continuously function. This assures that fresh air will be entering the building at all times. The open front seat is also easier to use for most people, particularly people with disabilities, and it is more sanitary.

If the original seat assembly is a heavy-duty, open-front seat as supplied with the cross-linked polyethylene riser and is vandalized or removed because of normal wear and tear, do not go to the local hardware store and replace it with a thin, flat, closed-front, inexpensive plastic assembly. This is not only a disservice to the visitor it is unsanitary, difficult to use and will prevent the dynamic air flow that we have fought so hard to create.

3. **The riser shall be easy to clean and impervious to oxidizing cleaning agents.**

Thoroughly cleaning the toilet riser is essential and the easier it is, the more often it will be done. If the material is impervious to oxidizing cleaning agents then stronger caustic materials can be used and less time is spent cleaning. Cleaning agents should always be reviewed so that the maintenance personnel and the vault contents will not be adversely affected.

A new 5-ft long brush has been specifically designed and manufactured for cleaning toilet risers of all types. It is listed with the other products in SECTION 6.

4. **The riser shall be vandal resistant.**

The public has a tendency to vandalize those things that they dislike. Vault and pit toilets have been major targets in the past. The initial development of the cross-linked polyethylene riser resulted partly from reviewing hundreds of dented stainless steel risers. The cross-linked riser cannot be dented.

Caution - A green cross-linked polyethylene riser does exist that has no seat and a lid that seals off the air flow. This riser is not recommended.

NOTE: Do not pour concrete around the riser so that the riser cannot be removed. Periodically the risers have to be replaced due to normal wear and tear and due to occasional vandalism. When designing for people with disabilities, be certain to use the taller 18-inch riser.

TOILET PAPER DISPENSER

1. **If the vault or pit toilet building is located where there will be no people with disabilities, then use either the three-roll lock-bar dispenser or the mile-long (continuous roll) dispenser.**

Most people prefer a free rolling toilet paper dispenser because it is easy to get the paper. However, a free rolling toilet paper dispenser attributes to the following:

a. People will physiologically use more paper than they physically need.

b. Some visitors, having nothing else better to do while using the facility, will see how much paper they can spin off with a rapid pull. Maintenance personnel or visitors will gather up this excess paper and throw it into the vault.

The excess paper, resulting from the above two methods of over use, causes the following problems:

a. The cost of providing more toilet paper is increased.

b. The chances of using all the supplied paper before the next scheduled maintenance period increases. Visitors get very angry when there is no toilet paper.

c. The excess paper sandwiches with the waste and various forms of debris and causes the

pumper's hose to clog up (unless the vault contents are well mixed before pumping and no one wants to do that).

d. The excess paper aids the waste in mounding above the liquid level by creating a floating bed. This mounded waste becomes a breeding area for flies and increases odors.

e. The final problem of using excess paper is that when the waste is pumped and taken to a treatment plant, the hardest part of the waste to digest is the cellulose (toilet paper).

So, it becomes imperative to carefully examine the type of toilet paper dispenser that we use. The lock-bar dispenser was developed to solve all of the above problems but does not meet the requirements for people with disabilities.

Note. When placing the rolls on the lock-bar dispenser be sure to place them so the paper hangs on the outside. If it hangs on the inside it is very difficult to get off. ALSO, DO NOT MODIFY THE DISPENSER BAR SO THAT THE PAPER ROLLS FREELY.

2. **If the building is located for people with disabilities then consider using the mile-long (or continuous roll) dispenser.**

The single ply rolls can be up to one mile long. The two ply rolls are somewhat shorter but still very long. Rubber "O-rings" can be placed on the spindle of one manufacturer's product in order to control the pull off speed of the paper so the roll cannot spin freely. This dispenser gives the visitor all they want, but with the rubber O-rings on the spindle a person cannot easily spin the paper off the roll.

Another continuous roll dispenser uses friction pads on the spindle to control the pull off rate of the paper.

The larger roll replaces approximately 14 regular rolls. During maintenance, partially filled rolls are replaced with new rolls. Since the mile-long dispenser replaces 14 regular rolls, further savings of paper are achieved by not throwing away the 14 partially filled rolls.

Be certain that there are serrated edges on both bottom ends of the mile-long dispenser so that mischievous visitors cannot run out the door and through the recreation facility with that long string of paper.

NOTE: The continuous roll dispenser refills are sold as a system. The industry has not standardized the toilet paper refills so some rolls are not interchangeable with other brands of dispensers. Be certain that you have a source for refills before purchasing the dispenser.

LIGHTING

1. **Lighting within the building shall be adequate for the visitor to comfortably function but not directed in such a way that the visitor can see the waste in the vault.** DO NOT USE OVERHEAD SKYLIGHTS.

This criteria is more of an aesthetic consideration. The visitor will feel better about using a vault or pit-type toilet if there is no odor and the contents of the vault or pit cannot be seen. Overhead skylights illuminate the contents and consequently should not be used.

2. **Polycarbonate (LEXAN) windows shall be used in place of glass or thin plastic, to help prevent breakage by vandalism.** Fiberglass is not recommended because when damaged, the resulting splintering fibers could be a hazard.

Polycarbonate windows are considerably more expensive than glass but rarely are they broken.

3. **To maintain privacy, the LEXAN shall be translucent or covered with translucent louvers.** When selecting the type of windows and locating the windows, be careful not to place them in such a way that someone on the outside can see silhouettes on the inside.

VENTING INTRODUCTION

Before expanding on the venting design criteria, let's first discuss what causes a vault or pit-type toilet system to be odorless.

In order for proper venting to occur there must be some form of energy. This energy can be either wind, sun, or electric (ac or dc) powered fans. The method of achieving an odor free toilet is very simple. If the air inside the toilet building is forced to flow down the toilet riser into the vault and then out through the 12-inch diameter vent pipe, the building use compartment will have no odor.

Remember that the odor has not been eliminated, it has simply been removed from inside the building and forced to the outside. This outside odor problem will be discussed later when the building location is discussed.

How do we get this air in the building compartment to flow down the toilet riser into the vault and out through the vent pipe? *See Figure 3.*

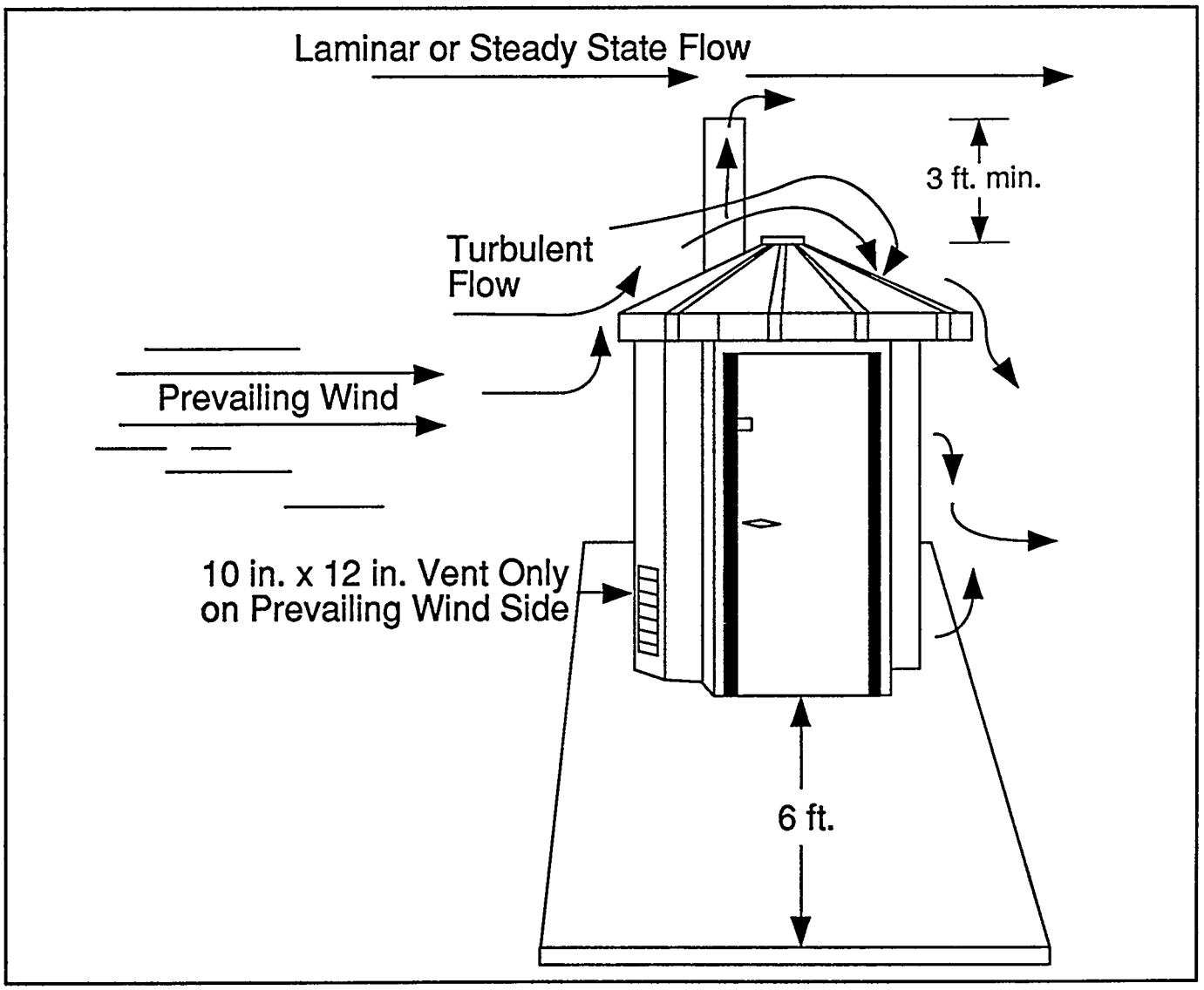

Figure 3

THE FOLLOWING ADDRESSES ONLY A SINGLE UNIT TOILET. For the design of a two unit toilet see SECTION 4, but read SECTION 2 first because a two unit toilet is simply two single toilets under one roof. For the design of a four unit toilet, follow the same reading instructions because a four unit toilet is simply four single unit toilets (in line with each other) under one roof. See SECTION 5 for the four unit design.

Place one 10-by 12-inch vent only on one side (either side, front or back) of the building. The correct side to place this vent is the side that the prevailing wind blows against. Install a 12-inch diameter round pipe to vent the vault and raise the pipe a minimum of three feet above the highest point of the roof. All vent pipes should be straight up from the vault. AVOID ANY BENDS IN THE VENT STACK BECAUSE THIS WILL CREATE A RESISTANCE TO AIR FLOW.

Two things will happen: First, by having the top of the vent pipe a minimum of three feet above the highest point of the roof, the wind will blow across the top of the pipe in a laminar or steady state flow and will not be affected by the turbulence associated with the wind flowing over and around the building. With just a two mile per hour (mph) wind flow the 12-inch pipe will aspirate approximately 60 cubic feet per minute (cfm) from the vault.

Second, the prevailing wind will blow air into the 10-by 12-inch building vent and, because there are no other openings in the building for the air to escape, this air will slightly pressurize the building compartment. This slight pressure begins to force the air down the toilet riser into the vault.

So, we have two forces at work: One is pulling the air out of the vault by aspiration and one is pushing the air down into the vault by pressure. This synergistic action results in an odorless toilet because the odor in the vault cannot go against the air flow and enter the building compartment.

CAUTION: Visitors have learned over the years that propping the toilet doors open is sometimes a way to reduce the odors in the building compartment. With the new design concepts shown in this manual, this past practice must be avoided. The doors must remain closed at all times!

The 10-by 12-inch vent in the building may be located midway or head high on the building wall **if the wind is prevailing in one direction all the time.** The objective of the building vent is to help pressurize the building compartment and the higher the vent is placed the greater the wind velocity to assist the process.

CAUTION: If the prevailing wind is blowing against the rear of the building (opposite the door), then place the 10-by 12-in building vent on this side, but be certain that the wind does not enter the building vent and blow the door open. This will short circuit the venting system. Door closures may be necessary.

If the wind is consistently very strong against the back of the building and you cannot keep the door closed with a door closure designed for people with disabilities, then reduce the size of the building vent.

Now let's look at continuously shifting winds. This condition must be addressed differently.

With continuously shifting winds, the 10-by 12-inch building vent must be placed as low to the ground as possible and on the side where the wind is the **most** common during the use period at the site. (Consult with the maintenance folks or campground host to assist in defining wind directions.) By placing the vent as low as possible, any negative effect of the wind on the building vent when changing to the opposite side of the building will be significantly reduced and the positive effect of the wind in a laminar flow across the open top of the 12-inch diameter vent pipe will prevail and draw the air in through the building vent, down the toilet riser and out through the vent stack.

Suppose there is a known up-canyon wind in the morning and a down-canyon wind in the late afternoon and evening. (*See Figure 4.*) When this wind condition exists (and it often does) DO NOT PLACE THE VENT ON EITHER OF THOSE SIDES! Place the vent on an adjacent side as low to the ground as possible.

There will be a small amount of aspiration caused by the wind blowing past this vent but, because the vent is low to the ground, the effect will be small. Again, the positive effect of the wind aspirating the air out of the 12-inch vent stack will prevail and this force will draw the air in through the building vent. .

There is a side benefit of placing the vent in the door. When the door is opened, a suction within the building occurs and at that moment odors can be drawn up out of the vault. By placing the vent in the door this suction effect is reduced because air can flow in through the vent as the door is being opened.

Some people will say that without additional vents at the top of the building compartment the building interior will get hot and the visitors will complain.

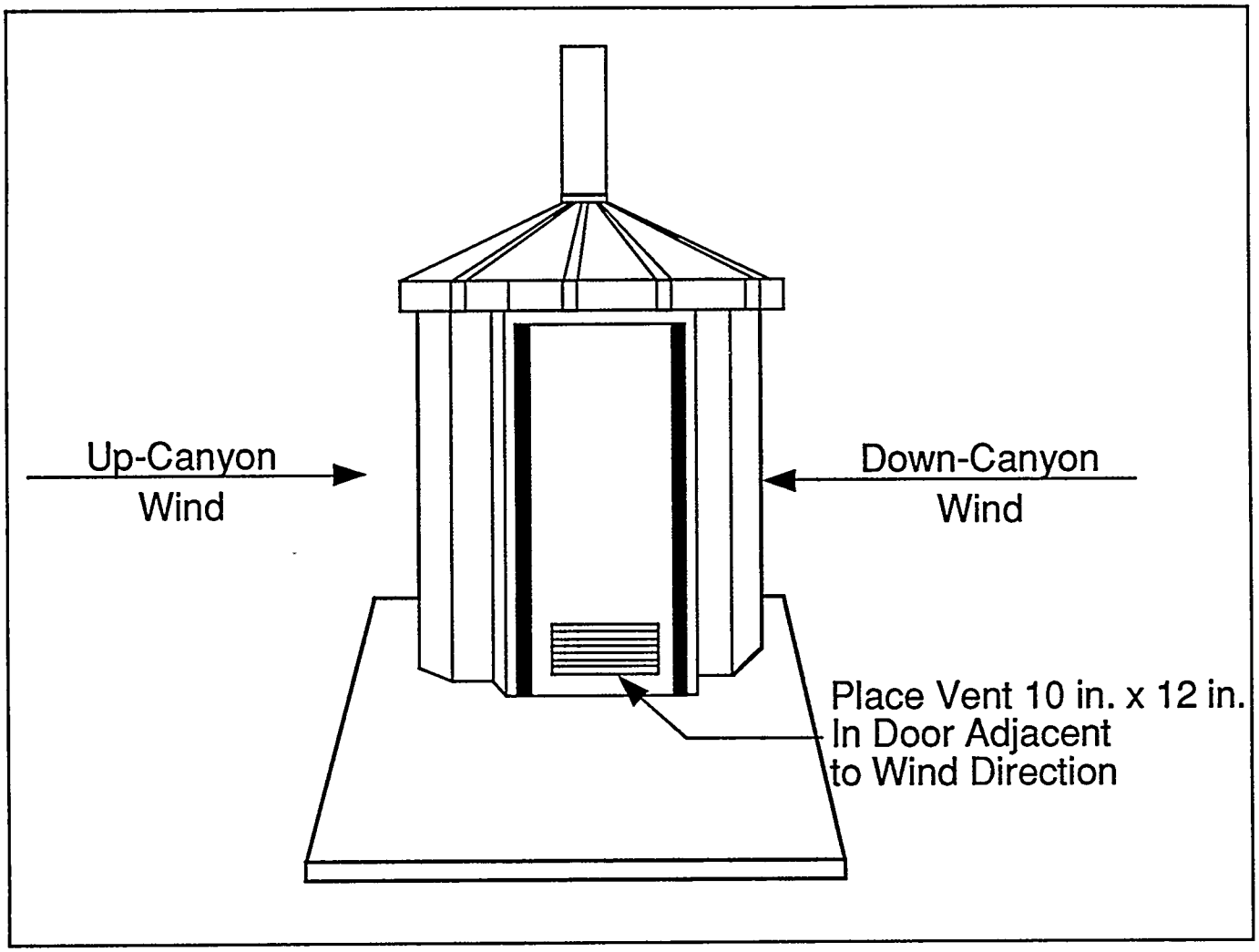

Figure 4.

DO NOT PLACE ANY ADDITIONAL VENTS ANYWHERE IN THE BUILDING.

Any additional vents in the building, or even a loosely fitting door, will allow the air flow to be short circuited. Nothing must interfere with the air in the building compartment from flowing down the toilet riser into the vault and up the vent stack.

This constant flow of air will assist in keeping the building cool. Remember, even if the building compartment becomes a little warm there will be no odors. The visitor dislikes warm stinky buildings, not warm odor-free buildings. Installing an insulated ceiling to keep the heat out (as previously discussed) is an important design criteria.

PROPER VENTING WHEN THERE IS NO WIND

When there is no wind, then the sun or electricity (ac or dc) must provide the energy.

USING A POWERED FAN. First consider ac or dc electricity. By placing a fan in the vent stack (run by ac power or by photovoltaics) and venting the building exactly the same as previously discussed, the building compartment will be odorless. The fan should be capable of moving air at a rate of 75 cfm. If you use an ac powered fan or use photovoltaics with a battery, consider using a timer so that the fan can be shut off around 9:00 p.m. and then started again when the use period begins (6:00, 7:00, or 8:00 a.m.). There is no reason to exhaust the stinky air all night long when the building only receives occasional use.

Generally, at night, the wind becomes still and dampness sets in. The stinky air from the vault, being forced out by the fan, can in some cases result in the entire recreation area being obnoxious in odors.If photovoltaics are used to drive a fan in a day use area, no timer is needed because when the sun goes down the fan will stop.

USING THE SUN FOR ENERGY (WITHOUT A FAN)

By placing the 12-inch diameter vent pipe in an enclosed and sealed metal shroud and facing the shroud in the south direction, the sun will heat the air between the shroud and the pipe evenly, all around the pipe. The pipe will then get considerably hotter than the outside ambient temperature and create a convection process that will draw the air out of the vault. (*See Figure 5.*)

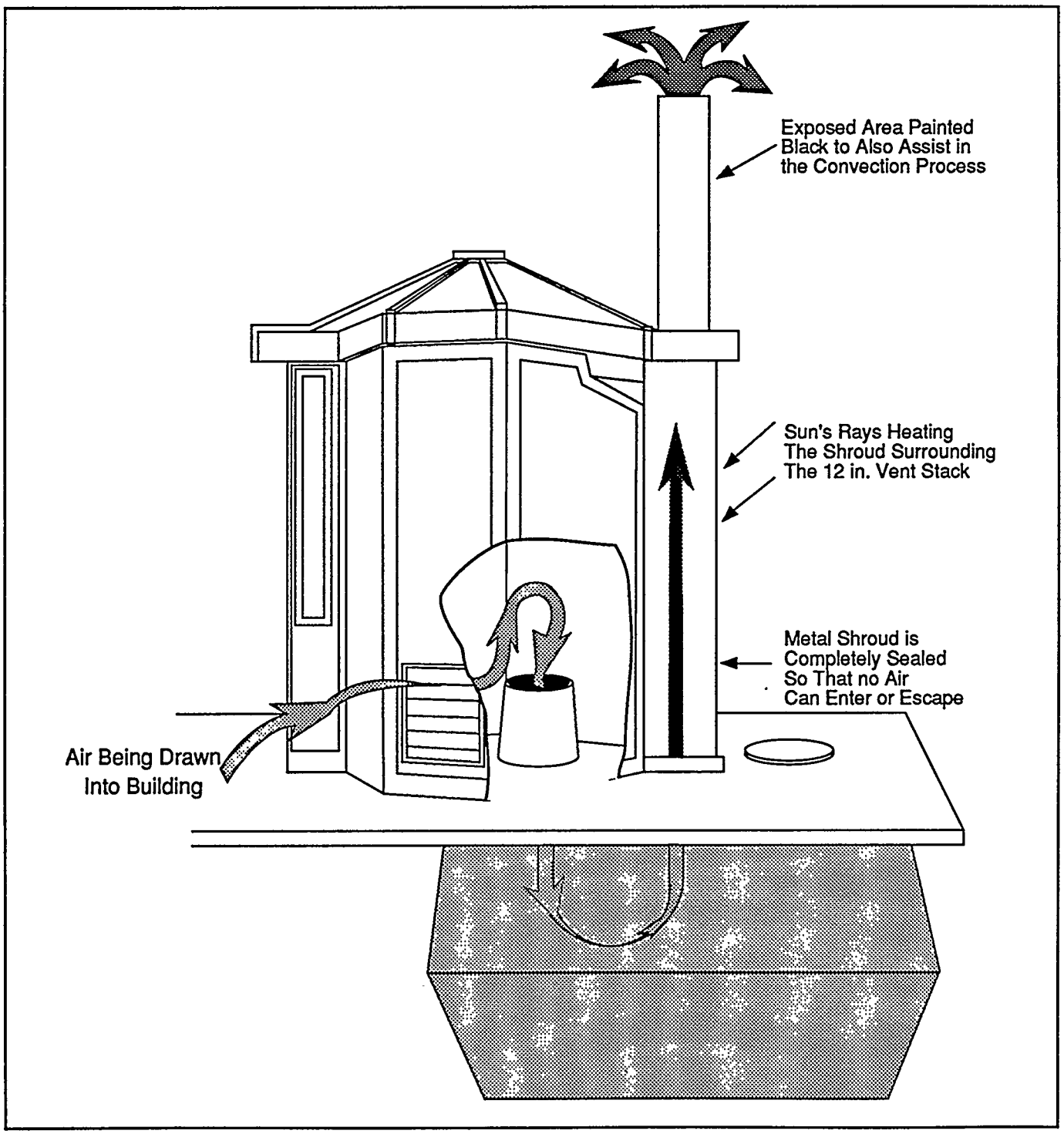

Figure 5

To further assist this process, the 12-inch pipe within the shroud should be galvanized metal. It can be relatively thin because the outer shroud will protect it from vandalism. Metal is far better for conducting heat than PVC, ABS, etc.

This method of venting is dependent on the sun hitting the shroud. Do not place the building in a bushy or wooded area that will prevent the sun from shining on the shroud. Do not orient the building so that the shroud is on the north side!

If only the vent pipe (without a sealed shroud) is exposed to the sun, the convection process will not be nearly as effective. The sun will only shine on one-half of the pipe at any one time and because of the various angles that the sun hits the pipe, the sun will effectively heat only about one-third of the outer surface of the pipe. The rest of the pipe is not being heated and any wind blowing will cool the entire pipe. The resulting convection process will be very limited.

The 12-inch vent pipe can also be placed within the building or in a wall space. However, the effect of the sun for convection will be reduced even further unless the wall space is designed to absorb heat.

EXPLANATION OF VENTING DESIGN CRITERIA

FIRST, THE AIR VENT FOR THE BUILDING

1. **The vent in the building, necessary to supply replacement air for the air drawn out of the vault, shall be around 120 sq in of free area for a single hole toilet.**

This building vent should closely match the opening of the toilet riser and the vent stack for the vault. If the building vent is much larger, then negative effects on the building vent caused by changing winds could draw odors up out of the vault and into the building compartment. If the building vent is too small, the 12-inch diameter vault vent will pull air into the building through a smaller opening and be working against a slight vacuum. So keep the building vent, the toilet riser opening, and the vault vent all about the same size.

2. **There shall be only one vent opening in the building and it shall be placed only on one side of the building (the side that the wind blows against).** The previous discussion illustrated where to place the vent if there were changing winds.

If there are two vents on opposite or adjacent sides of the building, the outside air can enter the building through one vent and exit the building through the other vent. Remember, nothing must short circuit the ability of the air entering the building use compartment from flowing down the toilet riser, into the vault and up the vent stack. The outside air entering the building compartment should slightly pressurize the compartment. If there is more than one vent then there is no chance of pressurizing the compartment because the air will flow in on one side and out the other side. Consequently, place only one vent on one side of the building. "Side" can mean either side or the front or back.

3. **The vent shall be located "head-high" on the building if there is a constant prevailing wind hitting that side. For shifting winds, the vent shall be placed as low to the ground as possible and on the side that the wind is most predominant during the use period. If there is an up-canyon wind in the morning, and a down-canyon wind during the afternoon, then the vent shall be placed on an adjacent wall surface as low to the ground as possible so that the wind has the least effect of aspirating air out of the building.**

The above has been discussed in the previous text. (Pages 19 and 20.)

4. **The vent shall be constructed of a heavy-duty material, such as expanded metal, in order to prevent vandalism.**

When the building vent is located close to the ground there is more of a chance for vandalism. By constructing the vent out of a heavy-duty material, vandalism will be reduced. Remember, the free open space must be approximately 120 sq inches. The size of the actual vent may have to be bigger than the 10 by 12 inches if expanded metal or designer block is used.

Normally, louvers are used to prevent people from seeing inside the building. These louvers should also be vandal resistant.

5. **There shall be no screen in the vent opening unless the size is 1/4-inch mesh (least dimension).**

Maintenance on vault toilets is never perfect and periodically waste will mound up above the liquid level. This exposed waste becomes a breeding area for flies. If we install screens in the building vent area, the flies that are generated within the vault cannot get out. The second biggest complaint of vault toilets, other than the obnoxious odors, is the flies in the building. The 1/4-inch mesh size will allow the flies to leave.

The 1/4-inch mesh screen takes up space, so be sure to increase the 10-by 12-inch vent size so that you end up with a free space of 120 sq inches.

SECOND, THE VENT TO ASPIRATE ODORS OUT OF THE VAULT

1. **The vault vent shall be a minimum of 12 inches in diameter.** Each vault shall have its own vent. This 12-inch vent size is for single unit toilets only.

In order for a vault or pit-type toilet to vent correctly and eliminate odors from coming up into the building use compartment, a steady flow of air needs to go from the building compartment, down the toilet riser, into the vault, and out of the 12-inch vent stack.

There are many of nature's influences that interfere with this venting process. Shifting winds, cloudy days, rainy days, and windless days are some of these changing influences. So, in order to insure that the venting will be effective most of the time, it is necessary for the air flow out of the vault to be between 60 and 100 cfm.

After evaluating 4, 6, 8, 10, and 12-in pipes, 10-ft long, in a calibrated wind tunnel at wind speeds of 2, 5, and 7 mph, the results clearly showed that the size had to be a minimum of 12 inches in diameter. (A 12-inch pipe will aspirate approximately 60 cfm when the wind speed is 2 mph.)

Square ducts and rectangular ducts (the rectangle was on a ratio of 3 to 1) were also evaluated. Both square and rectangular openings work better than the round (the wind must, however, be perpendicular to the short side of the rectangle and perpendicular to either side of the square) until the wind changes slightly and blows across the diagonal of either duct. The ability of the duct to aspirate was then significantly reduced. Therefore, the round pipe, which is independent of any wind direction, is the recommended top of any venting system. A square or a rectangle can be brought up from the vault to just above the roof (if the designer finds it necessary) but the last foot should be round.

Also studied in the wind tunnel were 29 different tops that are sometimes placed on vent pipes to increase aspiration (turbines, rotating siphons, stationary ventilators, pipe size increasers, and tops designed as round venturies).

The simple open top pipe aspirated more air than any of the 29 tops at a 2 mph wind speed. Some of the tops aspirated more air than the open top pipe at wind speeds above 2 mph, but why spend a lot of money for the top and then have to maintain it when the open top 12-inch pipe aspirates more air than is necessary above a 2 mph wind speed. In order to have the toilet odor free for the majority of the time, the 2 mph wind speed was considered critical. It is easy to make the venting system work at greater wind speeds.

2. **The 12-inch vent pipe shall be a minimum height of 3-ft above the highest point of the roof.**

The only way the 12-inch pipe will effectively aspirate the air out of the vault is to have the wind flow go over the top of the pipe in a laminar flow or steady state condition. In order to guarantee a laminar flow condition, the pipe must be high enough above the highest point of the roof to escape the turbulence of the wind going around and over the building.

In many cases the vent must be considerably higher, depending on the surrounding vegetation. After using smoke bombs to evaluate the flow of air over and around buildings, it was easily determined that the absolute minimum height of the 12-in vent stack must be three feet above the highest point of the roof. If the building

is located incorrectly and odors emitted from the vent stack are causing problems in the immediate recreation area, the vent pipe may have to be raised to keep the odors from reaching the ground.

3. **The 12-inch diameter pipe above the roof shall be painted a dark color (or shall be black ABS) to take advantage of potential convection from the sun's energy as the sun heats the pipe.**

Even though, as previously explained, the sun is only effectively heating approximately one-third of the pipe, this minor assistance is still a positive effect. Everything must be done to aspirate the air out of the vault to assure an odor free building in as many climatic conditions as possible.

4. **The top of the 12-inch pipe shall remain uncovered and unscreened.**

If a screen is used for some reason(such as preventing birds from building a nest or preventing rocks from being thrown in) then use a thin wire 1-inch mesh. This will not significantly reduce the aspiration effect of the wind blowing over the pipe. The screen must be placed parallel to the ground. CAUTION: Be certain to keep the screen clear of leaves, cobwebs, etc., so the aspiration effects of the wind blowing across the top of the pipe will not be reduced.

Screens of any size are not recommended!

If for some reason it is absolutely necessary to put a protective cover over the top of the pipe (perhaps to help reduce the noon-time sun light from illuminating the vault contents) be certain that it is no more than a flat plate raised 12 inches (one pipe diameter) above the top of the pipe. (*See Figure 6.*)

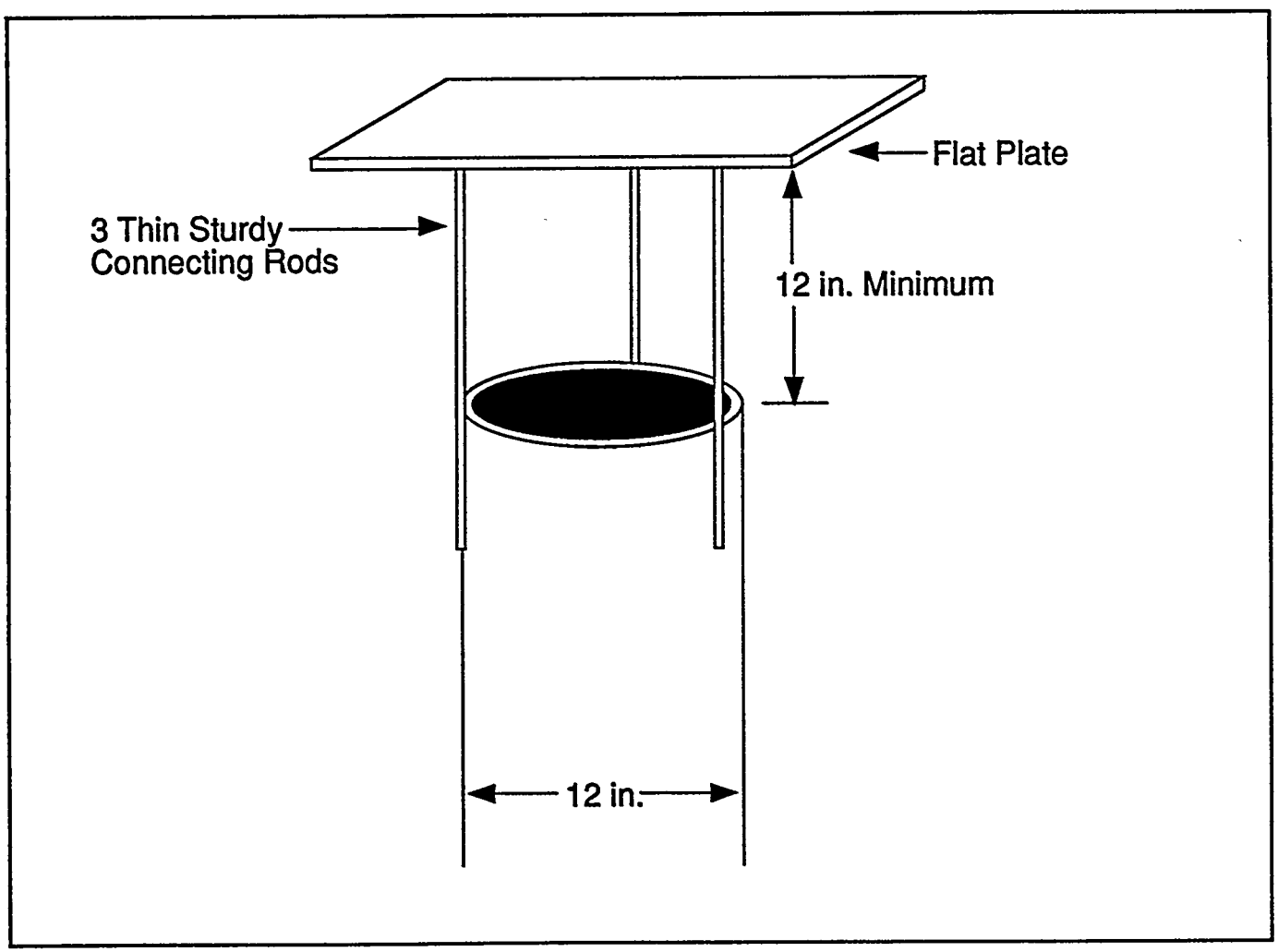

Figure 6

Do not use a cone or other shaped top because of the turbulence caused by the wind over and around the top.

Rain entering the pipe is not a problem except, perhaps, in Alaska. Almost all vaults are deficient in water, so any water added by rainfall can only help.

The problem of how high to raise the flat plate was validated in a calibrated wind tunnel. The plate was raised until the reading of the aspiration (air flow through the pipe) was the same as when there was no top on the pipe.

NOTE: Use no more than three thin round rods to hold up the flat plate so that the wind is not restricted (anymore than it has to be) when flowing over the top of the pipe and through the rods.

Also, if a particular top is used, be certain to alert the maintenance folks that this top must be maintained. All cobwebs need to be removed and the original function of the top needs to be maintained. The air flow through the vent pipe must not be reduced! TOPS OTHER THAN A FLAT PLATE ARE NOT RECOMMENDED.

PLACING THE BUILDING ON THE SITE

NOTE: A BUILDING THAT IS CORRECTLY DESIGNED, IN ALL ASPECTS, WILL NOT FUNCTION PROPERLY UNLESS IT IS LOCATED PROPERLY IN THE FIELD!

1. **The building shall be placed to take advantage of the wind flow or the sun's energy (preferably both).**

In order for proper venting to occur, an unobstructed flow of wind must be directed past the building. Buildings should be placed closer to open areas and roadways in order to take advantage of the wind.

CAUTION: Placing a vault or pit-type toilet building immediately adjacent to a roadway may result in owners of motor homes, etc., dumping their recreational vehicle waste into the vault or pit.

If a given area has very little wind, then the building should be located to take advantage of the sun's energy. By placing a shroud around the vent stack and sealing the air space between the pipe and the shroud and by facing the vent stack and shroud toward the sun (true south), the resulting heat convection process will assist in the aspiration of the air from the vault. Selective clearing of vegetation may have to be done to allow the sun's rays to hit the pipe shroud or to create a path for the wind.

2. **The building shall not be placed in a hollow, beneath an overhang, on the lee side of a ridge, immediately adjacent to a dense tree line, or in dense brush and/or trees. Both the building location and orientation are important.**

The building should be placed to prevent surrounding earth formations from causing down pressures on the building. This will result in poor venting. Do not place the building close to dense tree or brush cover or immediately adjacent to any building (pumphouse, picnic pavilion, assembly building, etc.) that will interfere with the normal flow of air past the building. Buildings placed on the lee side of a ridge are subject to down pressures by the wind as the wind blows over the ridge and down onto the building.

3. **Place the building so that odors emitted from the vent stack will not affect the visitors during their use of any of the recreation facilities (campgrounds, picnic areas, boat launch areas, scenic overlooks, etc.)**

The design of vault and pit-type toilets as outlined in this manual will virtually eliminate the odors within the building. However, the odors from the vault have not been eliminated. They have just been moved to the outside of the building. Consequently, it is important to locate the building so that the odors leaving the building do not affect the visitor use areas. This will require some early planning and close coordination with the maintenance personnel on the site to verify prevailing wind directions.

4. **Do not place two single unit (or two unit) toilet buildings close together and in line with the wind.**

If two buildings are close together and in line with the wind, the downwind building will receive the turbulent flow of air from the first building. This is not conducive to good venting.

It is acceptable to have the buildings close together if they are located so that the prevailing wind strikes both buildings equally. Normally, there will be no problem if the buildings are offset enough to receive equal wind force.

As a summation of the previous design criteria, the following *Figure 7* shows a new, correctly designed, premanufactured vault toilet system (from Romtec, Inc.) that comes complete with a 750 gal vault, disabled access building, cross-linked polyethylene toilet riser, lightweight manhole cover, and a correct venting system.

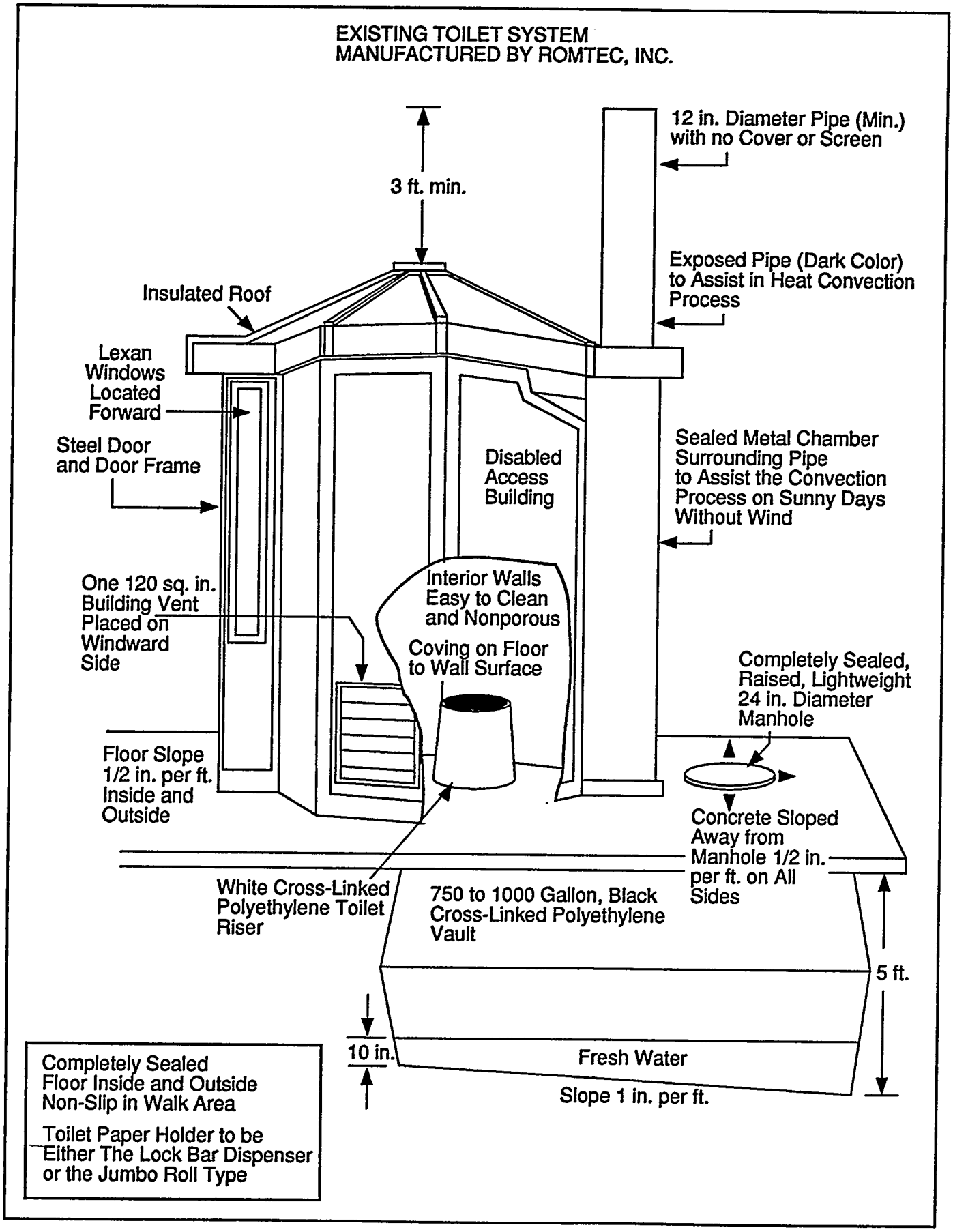
EXISTING TOILET SYSTEM
MANUFACTURED BY ROMTEC, INC.
3 ft. min.
12 in. Diameter Pipe (Min.) with no Cover or Screen
Exposed Pipe (Dark Color) to Assist in Heat Convection Process
Insulated Roof
Lexan Windows Located Forward
Steel Door and Door Frame
Disabled Access Building
Sealed Metal Chamber Surrounding Pipe to Assist the Convection Process on Sunny Days Without Wind
One 120 sq. in. Building Vent Placed on Windward Side
Interior Walls Easy to Clean and Nonporous
Coving on Floor to Wall Surface
Completely Sealed, Raised, Lightweight 24 in. Diameter Manhole
Floor Slope 1/2 in. per ft. Inside and Outside
Concrete Sloped Away from Manhole 1/2 in. per ft. on All Sides
White Cross-Linked Polyethylene Toilet Riser
750 to 1000 Gallon, Black Cross-Linked Polyethylene Vault
5 ft.
10 in.
Fresh Water
Slope 1 in. per ft.
Completely Sealed Floor Inside and Outside Non-Slip in Walk Area
Toilet Paper Holder to be Either The Lock Bar Dispenser or the Jumbo Roll Type

Figure 7

SECTION 3

GUIDELINES FOR THE MAINTENANCE AND OPERATION OF VAULT TOILETS

INTRODUCTION

In the past and up to the present, vault toilets were considered to require very little maintenance. The building interior was swept out and occasionally washed, the toilet riser was infrequently cleaned on the inside, a few cobwebs in the building compartment were occasionally knocked down, and the vault was pumped when it filled up.

It is necessary to reduce odors everywhere they occur. It is also necessary to offer the cleanest toilet possible to our visitors. If the toilet facilities are clean, odor free, and maintained, then you will rarely hear any complaints about the remainder of the recreation facility.

This portion of the manual will discuss the general maintenance requirements that should be adhered to.

STARTING UP AND MAINTAINING THE VAULT

Assuming we are starting with a new vault, there should be approximately 10 inches of water in the vault, under the toilet riser (*See Figures 1 or 8*). Assuming the vault has a 1 inch per ft slope, there will be approximately 16 inches of water in the vault under the outside manhole cleanout cover. This precharged water will help to delay the forming of the cone of waste that forms under the toilet riser. When the waste rises above the water, the flies will begin to breed and additional flies will then be in and around the toilet.

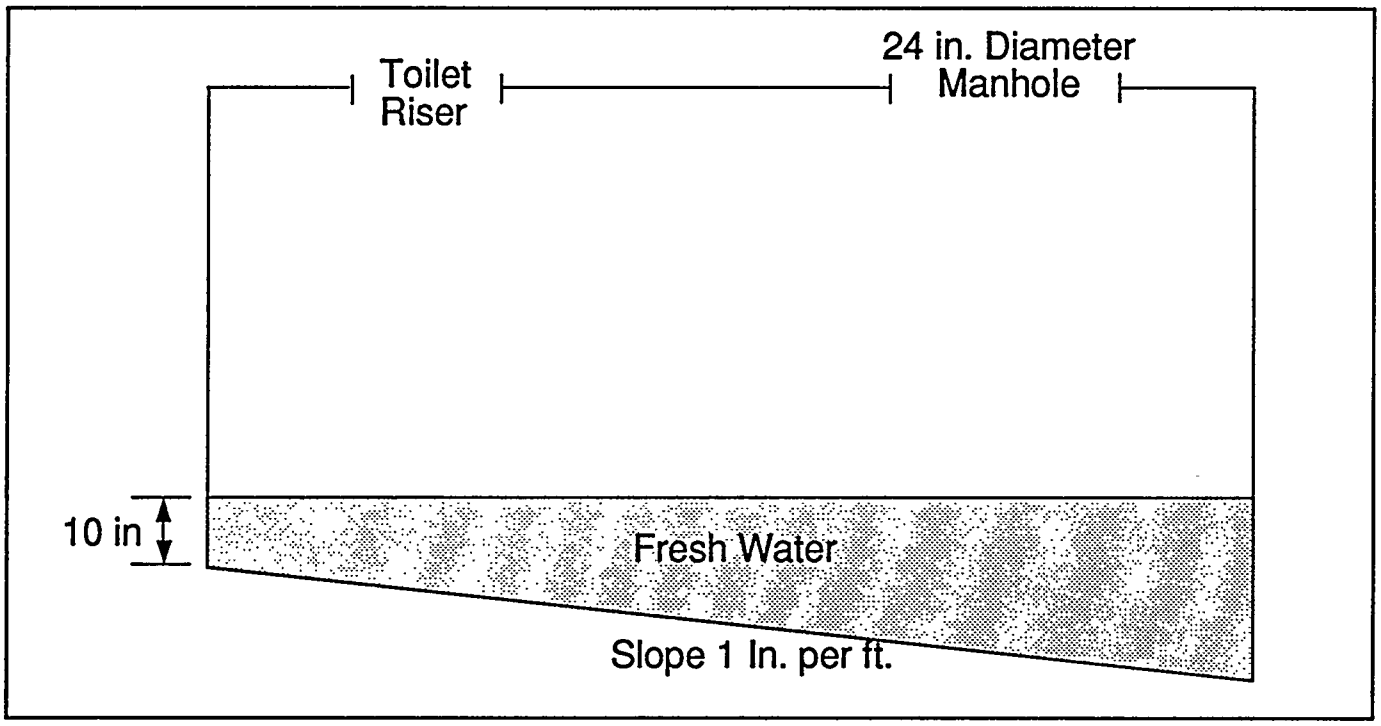

Figure 8

Another benefit of maintaining a water level is that the odor emanating out of the vault will be reduced by about 30 percent.

A water layer is also more aesthetically pleasing to the visitor than a mound of waste.

During the use period the waste will eventually begin to cone below the impact zone. Periodically it is necessary to move the cone over. Do not mix the vault contents because this will release obnoxious gases and the facility will have increased odors for three or more days. When there is an outside manhole to pump the vault, the task of moving the cone is easier. Simply take a large hoe and lower the hoe on the far side of the cone area and pull the cone from under the impact zone. If you have to move the cone from inside the building compartment, down the toilet riser hole, then use a long handled flat shovel and push the cone away from the impact zone. This is more difficult! Either way, do it slowly!

By periodically moving and submersing the cone, fly production will be much less and odors will be significantly reduced. During this procedure there is also an opportunity to remove the more obvious floating debris such as cans, bottles, pine cones, etc. Use a 4 or 6 tine clam rake for this work and dull the ends of the tines to prevent injury to any person or damage to any synthetic liners.

PUMPING THE VAULT

This is the most obnoxious task in any recreation complex. Extreme courtesy and patience should be extended to anyone associated with this task.

The pumper (who contracts to remove the waste) should be called into the office at the beginning of the recreation season (especially new contractors who have not pumped vault toilets) and thoroughly instructed as to procedure, what the pumper can expect to find, (see inventory in Section 8) what equipment is needed, and what the requirements are to dispose of the waste. The pumper will be required to remove the entire contents of the vault.

The pumper will need heavy duty plastic bags for holding all the debris that is removed. The pumper will need two 5-to 6-ft long clam rakes, with between 4 and 6 tines (rounded on the ends) approximately 6 inches long. There is some debris that is more easily removed by two rakes than one and sometimes two people need to work together to remove heavy rocks.

Once the more obvious debris on top is removed, the clam rakes are necessary to plunge down through the waste to locate the debris hidden from view.

The pumper might want to have a two prong grabber (5-ft long handle) to assist him in removing the top floating cans and bottles. The grabber is faster and more dependable than trying to balance the debris on the clam rake tines.

The pumper will need a pressure water system to clean the vault walls and dilute the final remaining waste so that more waste can be removed. This pressure water system is also useful in cleaning up the mess that the pumper will make above ground during the pump out process (especially if the pumper is required to pump through the toilet riser because of not having an outside cleanout). **No new vaults should be built without an outside 24-inch diameter cleanout!**

For the pumper's safety they may want to have rubber gloves, safety glasses, and a face mask around the mouth (for obvious reasons). They should also keep up with various shots recommended by a local physician (hepatitis, tetanus, typhoid, etc.).

The pumper should be required to remove as much debris as possible BEFORE PUMPING BEGINS. Once the pumping begins, the vacuum system will quickly remove the liquid contents. If during this initial pumping, the hose continually gets clogged with debris and has to be removed from the vault, the liquid in the vault will be gone long before the waste solids are removed because, as the hose is withdrawn, it continues to remove the top liquid while partially clogged with a can or bottle, etc. So, remove as much debris as possible before pumping begins.

When the pumper gets to the bottom, the suction hose will begin to suck air when there is about 3 inches of waste remaining. At this point, more water should be added. This is a good time to wash the vault side walls down and accomplish two things at once. Then the remaining waste should be removed. The hoe may again be needed to pull some remaining sludge out from under the impact zone and down the slope.

CAUTION: If the pumper's truck is parked lower than the vault and the truck fills up before the entire contents of the vault are emptied, the pumper's only recourse is to let the contents of the hose spill out on the ground. This is an unacceptable practice and should be avoided.

After the pumping is completed, 10 inches of water should cover the shallow end of the vault (assuming there is a 1 inch per ft slope) or over the entire flat bottom of previously existing vaults that have no slope. At this time the addition of a quart of clorox bleach is a good idea because it will disinfect the remaining waste and result in a good odor reduction. The chlorine will soon oxidize off as waste is introduced.

The pumper should be required to disinfect all topside concrete surfaces that were contaminated with waste. If the pumper was required to pump through the toilet riser (only because there was no outside cleanout) then the adjacent walls and the entry way may also have to be disinfected. The pumper should be required to dispose of all contents removed from the vault into a Forest Service or State approved disposal site.

The pumper should be accompanied by an authorized inspector to see that the above tasks are accomplished.

The above procedure and equipment suggested for a contract pumper are also applicable to Agency personnel performing this task.

CLEANING THE INTERIOR BUILDING FLOOR.

The most important criteria here is consistently removing all forms of odor causing material. This means a continuous cleaning and disinfecting of all cracks and 90° corners. Because most toilets have an improperly sloping floor, cleaning personnel should use a squeegee to remove the excess water. Standing water should never be left on the floor!

The floors should be thoroughly sealed to prevent any staining. If stains already exist, do not use a clear sealer over the stain. The final floor surface should be light in color and stain free.

CLEANING THE TOILET RISER.

The toilet riser is the most important item in the toilet building to keep thoroughly clean and disinfected. Unfortunately, it is often the most overlooked because one's face is just above the opening of the riser when cleaning with the normally supplied 18-inch long brush. There is now a 5-ft long brush with foam rubber grips so that you can now stand fully upright and comfortably put your body weight into cleaning the inside of the riser. Brush is listed in SECTION 6.

About once a month, as a minimum, the entire riser should be removed and thoroughly cleaned on the outside with soap and a disinfectant. Odor causing materials can collect on the outside flange area and need to be removed.

During each visit, inspect the toilet seat and tighten as needed. When the original seat assembly is vandalized or removed because of normal wear and tear, do not go to the local hardware store and replace it with a thin, flat, closed-front, inexpensive seat assembly. This is not only a disservice to the visitor, it is unsanitary, difficult to use and will prevent the dynamic air flow down the riser and up the vault vent.

Be certain that the seat cover has a back stop that will not mar the finish of the seat and is located to hold both the seat lid and seat comfortably open.

CLEANING THE BUILDING INTERIOR

When cobwebs are hanging in the corners and dead flies or rodent nests are on various flat surfaces, the visitor does not get the feeling of cleanliness. Window louvers often present this problem.

Keep the walls, window ledges, joists, etc., free of dust and cobwebs and particularly free from spiders and dead flies.

If the present wall surfaces are porous, then seal them so they will be easy to clean and odors will not be further absorbed. It goes without saying that all writing and other defacing marks should be removed or covered over.

The use of pleasant smelling deodorants placed in a container on the wall is optional and acceptable.

MAINTAINING THE EXTERIOR

The exterior has a lot to do with the visitors' perception of cleanliness.

Keep the exterior free from mud and/or water stains on the walls, damaged boards or broken block, and keep the paint/stain presentable. Also be certain that all door fixtures (knobs, latches, slider bolts, hinges, etc.) are in proper working order.

MAINTAINING THE VENT PIPE

All tops and screens should be removed from the vent pipes. The small amount of rain that enters the pipe can only be a benefit because most vaults are deficient in water anyway. The only reason, in most cases, for a flat top to be placed over a vent pipe is to keep the noon day sun from illuminating the vault contents. Remember we are trying to prevent the visitor from seeing the vault contents.

After removing the tops and screens from the vent pipe, be certain that the vent stacks are clear of cobwebs, etc. For a single unit toilet the vent pipe should be 12 inches in diameter and raised to a minimum of 3 ft above the vent stack.

Repair bullet holes or other damage to the vent pipe as soon as it occurs. This will assure that no cross connections of air flow occur in the venting system.

If galvanized pipe sections are used for the vault vent, then be certain that each connection is completely sealed so that no outside air can enter the vent pipe and interfere with the ability of the vent system from drawing air out of the vault.

BIOLOGICAL AND CHEMICAL ADDITIVES

Many producers of biological and chemical additives contact the managers of recreation areas and the maintenance personnel trying to sell their products, claiming that odors will be either reduced or eliminated and the waste will be liquefied and easier to pump.

A study of 27 such products were evaluated, in depth, in 1990. The report is available from the Technology and Development Center at 444 East Bonita Avenue, San Dimas, CA 91773.

None of the products eliminated the odor nor did they reduce the odor to an acceptable level.

When a manufacturer claims that their product will break down the waste and make it easier to pump, remember that fecal matter, toilet paper, and urine are not difficult to pump. It is the cans, rocks, bottles, etc., that cause pumping problems.

Also think about the process of adding the product. Ninety-five percent of the vaults have a cone of waste or floating mat on top (sometimes thick enough to walk on). So, when you mix up the biological or chemical product and pour it into the vault, the product will only effect the area it lands in. You certainly do not want to stir the product into the vault mass because of the resulting odors.

New waste is being added (sometimes immediately) after you finish adding the product. If there is a floating mat or a cone then this newly added waste is not affected by the product.

Many products are corrosive and require special handling.

Certain pH's have to be maintained in order for some products to work.

The recreation visitors throw all kinds of products into the vault toilets and many times these products are caustic and will nullify any bacterial effect.

All in all, adding biological or chemical products for odor control is not practical or economical. Let the burden of proof be on the manufacturer. If they wish to prove their product, let them do so at their expense over a season. Be careful if they require you to completely pump out the toilet and precharge it with water and then add their product. This practice will reduce odors approximately 30% without the additive.

Spend your time and money on changing the venting (see venting section), keeping the vent stack clear of cobwebs and debris, sealing the vault, maintaining a water layer over the waste, and keeping the building interior (especially the toilet riser) clean and disinfected.

SECTION 4

DESIGN OF A TWO UNIT TOILET

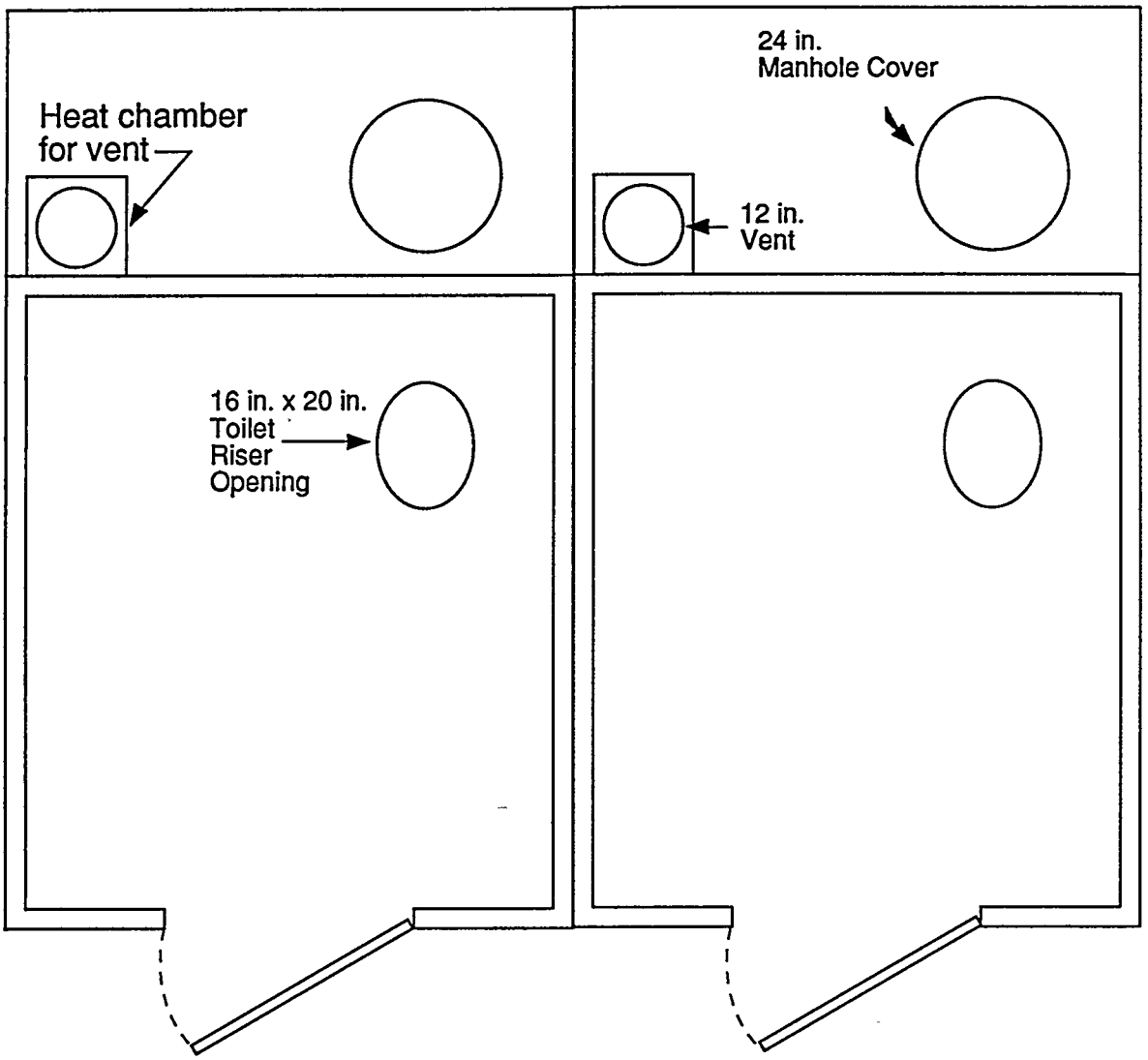

Floor Plan of a Typical
Two Unit Toilet Building

Figure 9

A two unit toilet is simply two single unit toilets under one roof. Each compartment must have its own vault toilet riser, vault and venting system.

All design features are the same for a two unit as they are for a single unit. (*See Figure 9.*) Read SECTION 2 for the correct design. The location of the building on the site in relation to the prevailing wind is, however, more critical.

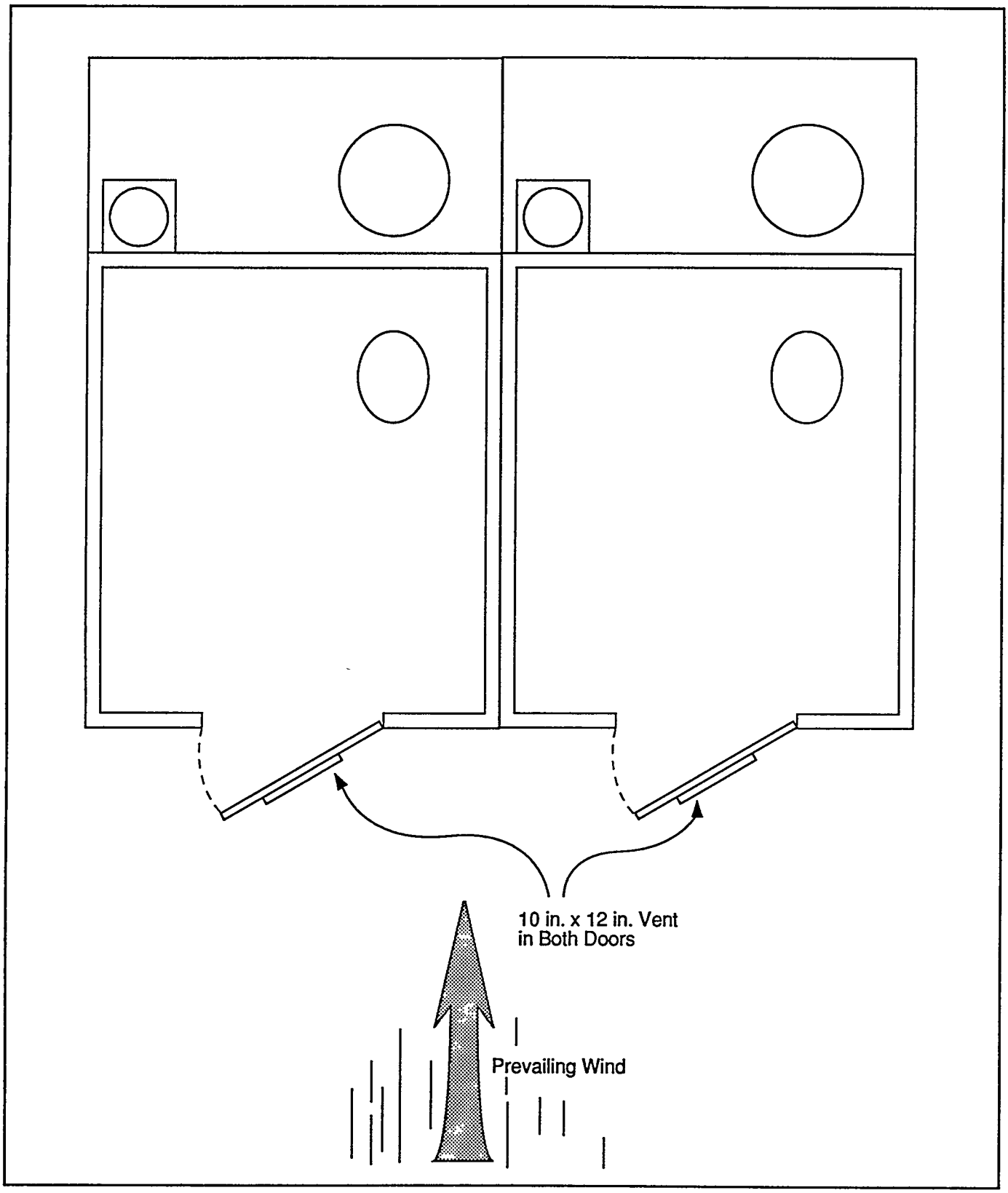

Figure 10

The building should be located so that the prevailing wind blows against the front doors if both doors are on the same side or against both backs of the building. (*See Figure 10.*) With the prevailing wind blowing against both doors, place the 10-by 12-inch vent in each door down low to the ground or if the wind blows against the backs of the building, place the vents on that wall. (Be sure the wind does not blow through and open the door.)

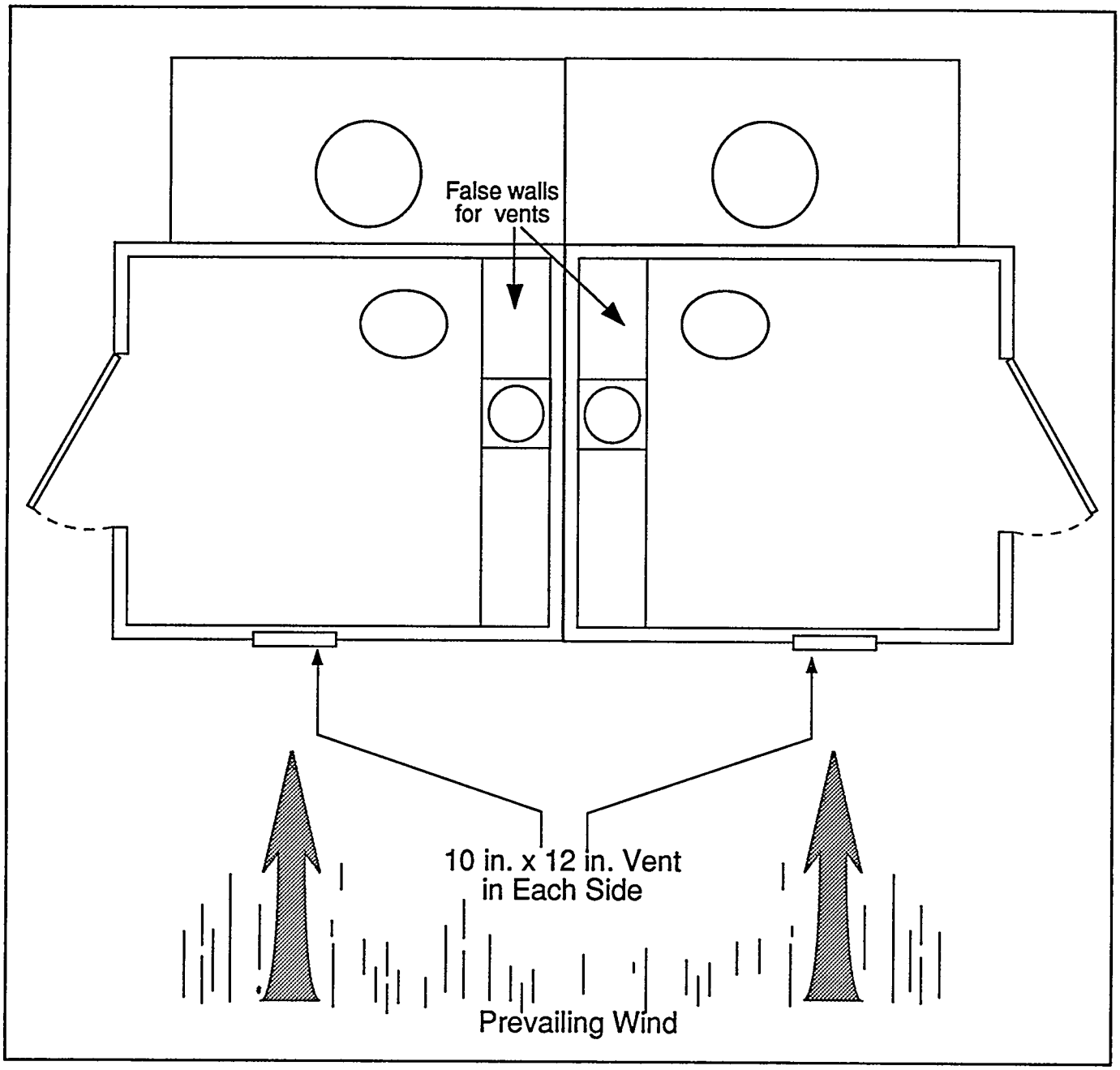

Figure 11

If the door entrances are on opposite ends of the building, then locate the building so the prevailing wind blows against the side, equally hitting both compartments. With the prevailing wind blowing against both compartments on one side of the building, place the 10-by 12-inch vent low to the ground and on each compartment side. (*See Figure 11.*)

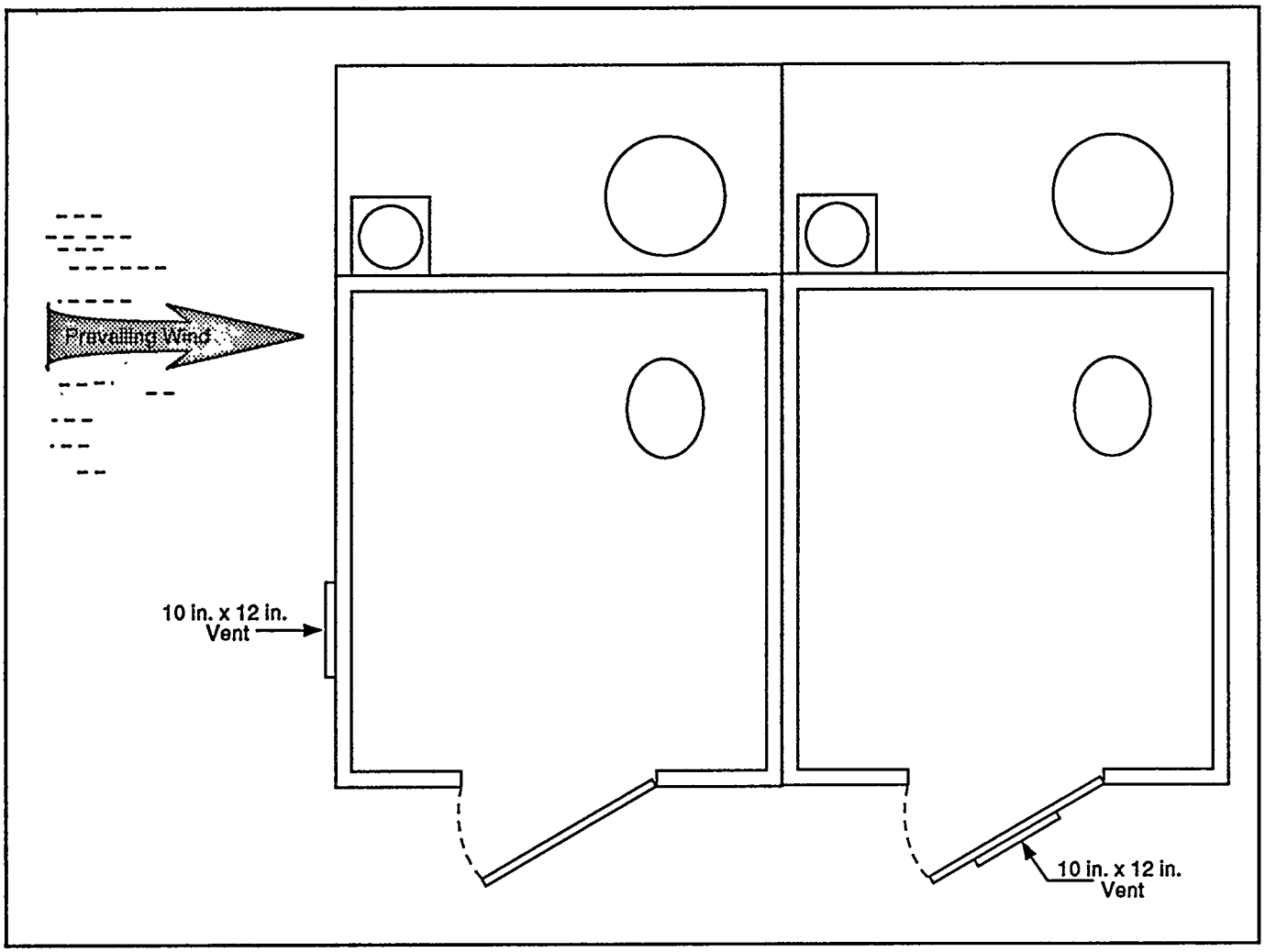

Figure 12

Now let's assume, for site location reasons, that the two unit building cannot be located so that the wind prevails against both compartments. (*See Figure 12.*)

Remember that both compartments are completely separate from each other. So, on the side that the prevailing wind blows against, take advantage of the wind and place the vent on that side (shown in above diagram).

The other compartment is now on the negative side of the building (negative effect of the wind) so place the 10-by 12-inch vent in the door as low to the ground as possible. The wind will still have a tendency to aspirate air out of the building compartment but the effect will be minimal because the least effect of the wind is at ground level. The aspiration of the air out of the vault by the 12-inch diameter vent stack, raised three feet above the highest point of the roof (13 to 14 ft off the ground), will have a much greater effect and will actually draw the air in through the lower vent in the door.

A more effective way to enhance the downwind compartment, when the wind is guaranteed to be prevailing against one side of the two unit building, is to place the downwind compartment vent over the door and put a scoop on it to funnel the air into the building. (*Figure 13.*) By placing the scoop over the door it will not be a potential injury causing item for the visitor. If the scoop is located on the lower part of the building, a person could hit their leg on it as they walked past the scoop.

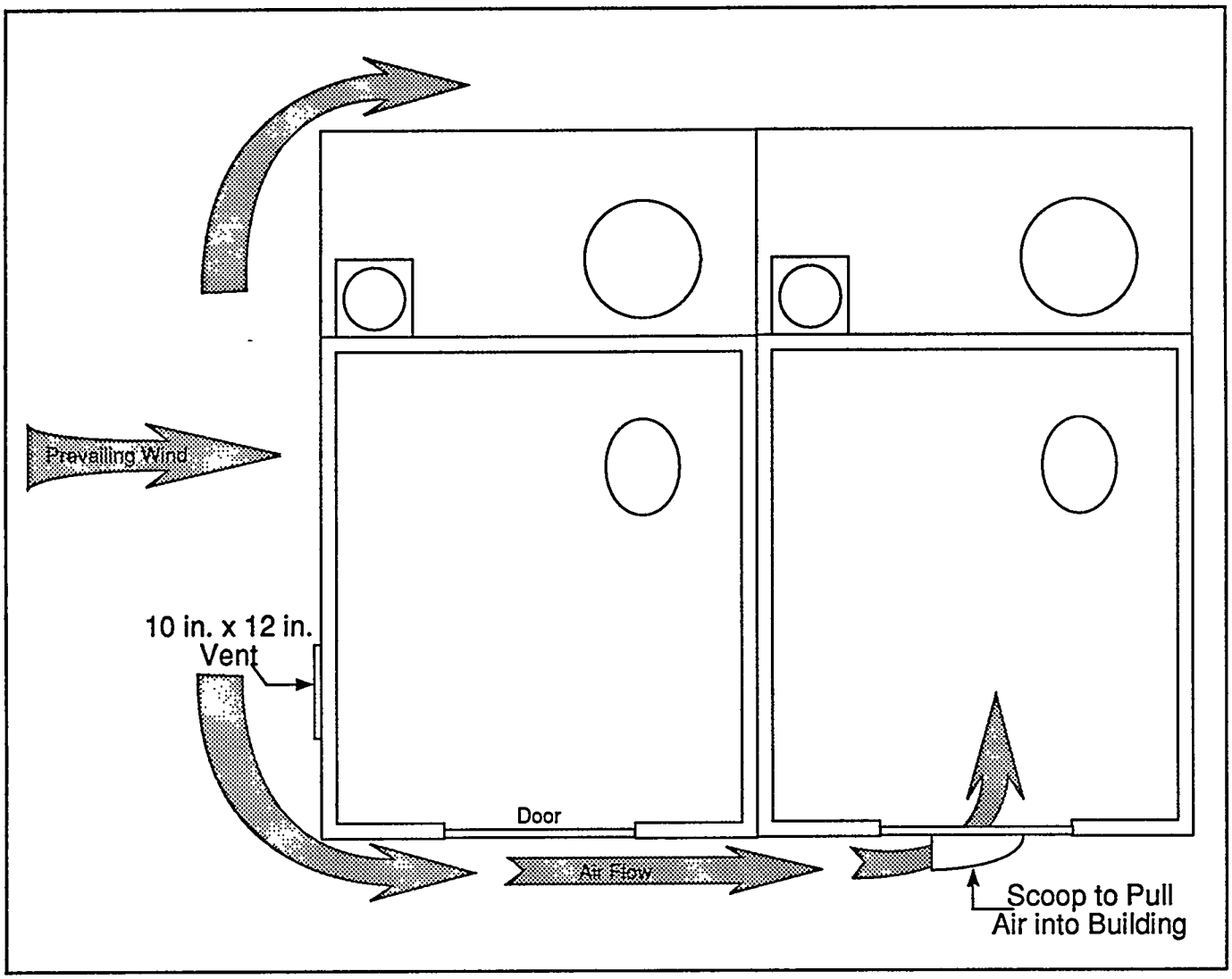

Figure 13

Always be thinking about how to get the wind to cause a slight pressure in each compartment. All building plans should incorporate a statement like: **All building vents shall be located by the Inspector or Contracting Officer's Representative (COR) once the building is located in the field.** At this time the inspector or COR can better determine where the prevailing wind is coming from and what the best way is to get the wind to blow into each compartment.

If the building was designed with similar openings on each side, then the COR could instruct the contractor to put a vent in one opening and a window in the other without having to do a field modification.

Assume that the wind is constantly changing and there is no prevailing wind that you can count on. The best location for the vents is low to the ground on the side that the wind is considered to be the most common during the major use period at the site. This is the best that can be accomplished but may not always result in an odor free building. The design of the building (both doors on one side vs. doors at each end of the building) should be taken into account when designing for each site. The location of the building in relation to the site (considering the prevailing or non-prevailing wind) may help dictate the style of building.

SECTION 5

DESIGN OF A FOUR UNIT TOILET

A four unit toilet is simply four single unit toilets, in line, under one roof. Each compartment must have its own vault toilet riser, vault, and venting system. All design features are the same for a four unit as they are for a single unit. Read SECTION 2. As with the two unit, the location of the four unit on the site, in relation to the prevailing wind, is critical. The building should be located so that the prevailing wind blows against all four front doors or all four backs of the building. The 10-by 12-inch building vents should then be placed in each door or on each back wall, depending on the wind direction, and low to the ground. *(See Figure 14.)*

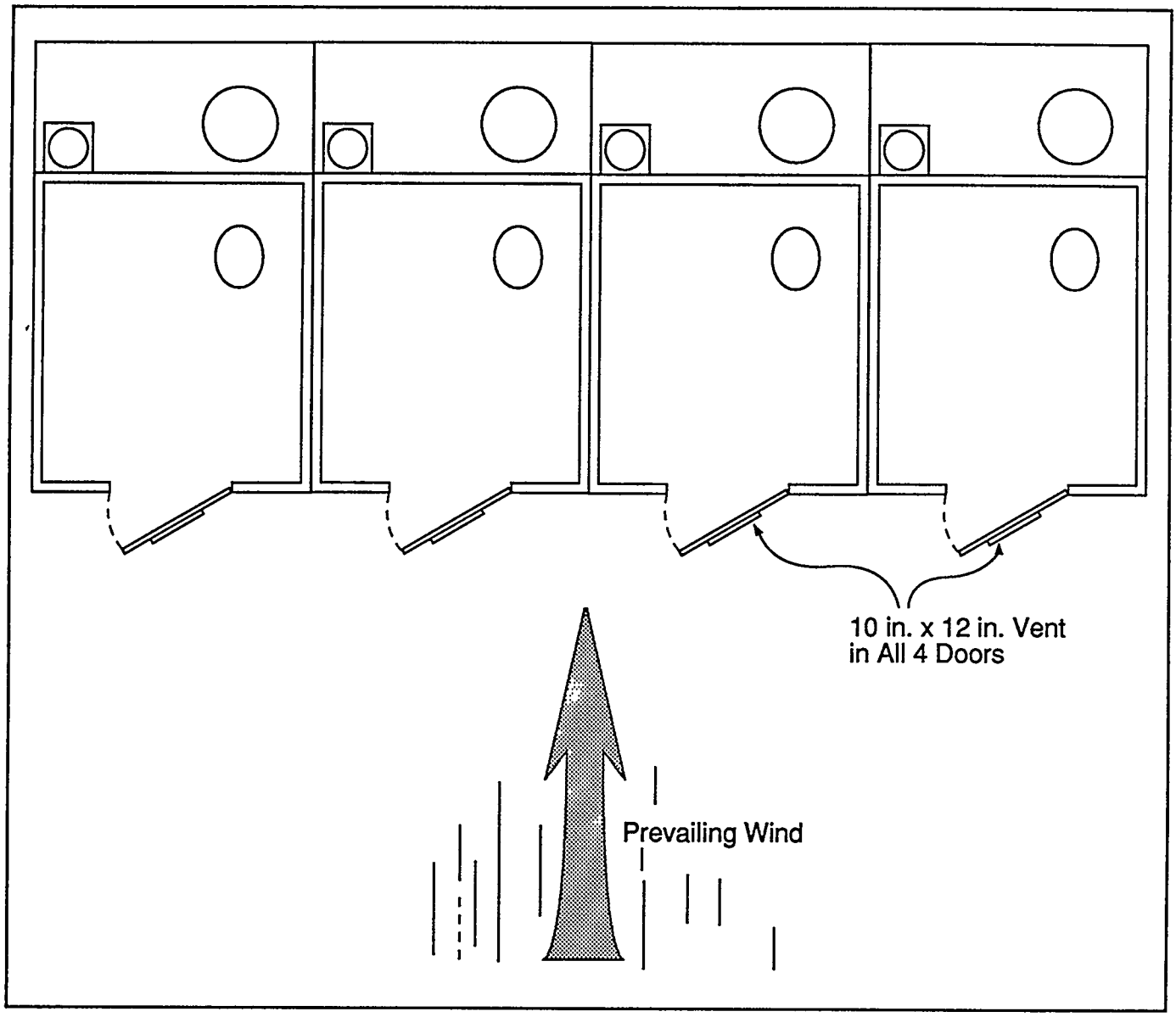

Figure 14

If the wind ends up blowing against one side so that three compartments are on the negative side of the wind, then the location of the building vents for these three can be enhanced by using the same scoop system as shown for the two unit toilet. This is only effective if the prevailing wind is guaranteed to be constant in one direction. However, this arrangement should be avoided.

A four unit toilet in a square format should not be built. (*See Figure 15.*) The reason is, that no matter what the wind direction, two of the compartments will be on the negative side of the wind force, resulting in the wind aspirating air out of those two building compartments. If powered fans are used in each vent stack, then the negative side aspiration problems can be overcome.

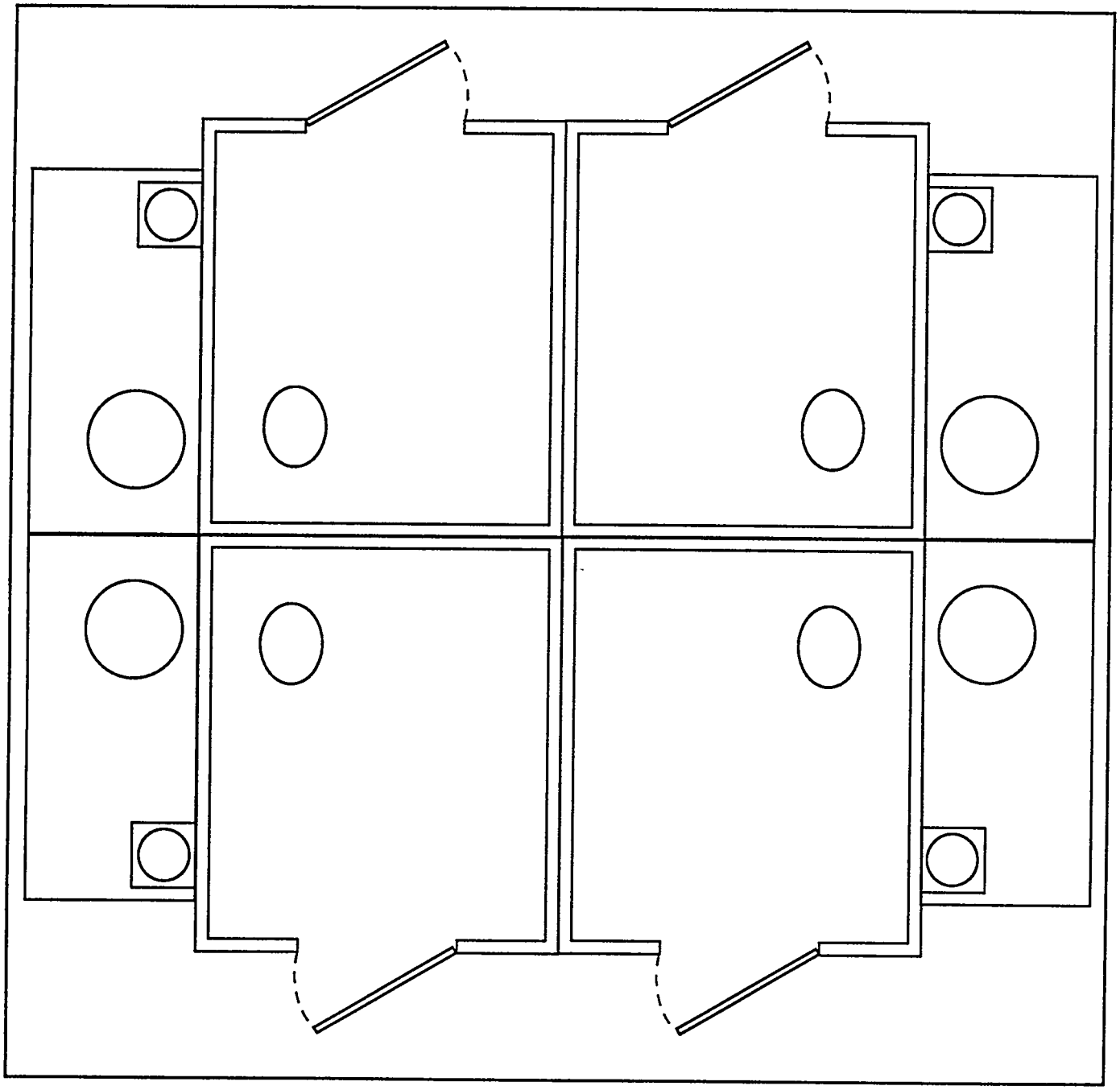

Figure 15

SECTION 6

MANUFACTURERS, NAMES AND ADDRESSES FOR THE MOST COMMON ITEMS

The following list of manufacturers are offered as a guide for items normally associated with vault and pit- type toilets. This list is not complete because there are many manufacturers across the country that can supply similar items to some of the items listed. If you do not already have a source for a certain item, this list may help get you started. The best way to select a product is to write to each manufacturer and tell them what you plan to use their product for and let them recommend their best product for that purpose. After evaluating the various products you then decide on the product, based on your particular parameters.

NOTE: FOR THOSE ITEMS THAT COSTS ARE GIVEN, THE COSTS ARE AS OF JULY 1991.

PREMANUFACTURED VAULTS

ROMTEC, INC.
15587 NORTH BANK RD.
ROSEBURG, OR 97470
PHONE (503) 496-3541
FAX (503) 496-0803

VAULTS ARE BLACK CROSS-LINKED POLYETHYLENE

I,OOO GALLON SIZE COSTS = $1,650 FOB PORTLAND, OR
750 GALLON SIZE COSTS = $1,450 FOB ROSEBURG, OR

COATINGS FOR CONCRETE VAULTS AND BUILDING FLOOR SURFACES

NOTE: MOST COATINGS MUST BE APPLIED AFTER THE CONCRETE HAS CURED 30 DAYS.

ALSO NOTE THAT COATINGS PLACED ON THE INSIDE OF THE VAULT MAY NOT BE ABLE TO WITHSTAND OUTSIDE HYDROSTATIC PRESSURES DUE TO HIGH WATER TABLES.

RAINGUARD PRODUCTS, INC.
821 WEST HYDE PARK BLVD.
INGLEWOOD, CA 90302
PHONE 213-670-2953

FOR VAULTS USE THEIR PRODUCT BG-500 USE A BLACK COLOR. FOR BUILDING FLOOR SURFACES USE SATIN LOK (clear and gray).

DEVCON, A DIVISION OF ILLINOIS TOOL WORKS, INC.
30 ENDICOTT ST.
DANVERS, MA 01923
PHONE 508-777-1100

FOR BUILDING FLOOR SURFACES USE EPOXY COAT 7000 (multicolors). NO BLACK COATINGS FOR VAULTS

PORTER INTERNATIONAL
CORPORATE OFFICE
400 SOUTH 13TH ST.
LOUISVILLE, KY 40203-1714
PHONE 502-588-9200

FOR VAULTS - FIRST, SAND BLAST AND THEN APPLY "TAR SET STANDARD" WHICH IS A THERMAL SETTING COAL TAR EPOXY RESIN. COLOR IS BLACK. FOR BUILDING FLOOR SURFACES USE 7500 SERIES MAGNA COAT (multicolors).

GARON PRODUCTS, INC.
1924 HIGHWAY 35, CN20
WALL, NJ 07719
PHONE 800-631-5380

FOR VAULTS USE DECORPOXY (black).
FOR FLOOR SURFACES USE TIGER BOND 221 (multicolors).

GARLAND FLOOR CO.
45OO WILLOW PARKWAY
CLEVELAND, OH 44125
PHONE 800-321-2395

FOR BUILDING FLOOR SURFACES ONLY USE CHEMI-COTE SR-VOC.
THEY HAVE NO COATINGS FOR VAULTS.

ATLAS MINERALS AND CHEMICALS, INC. FARMINGTON ROAD MERTZTOWN, PA 19539 PHONE 215-682-7171	FOR VAULTS USE CHEM-PROOF 2400 TOP COAT A VINYL ESTER COATING (black). FOR BUILDING FLOOR SURFACES USE REZKLED 110 SL (multi-colored).
COATINGS COMPOSITES 10105 DOTY AVE. INGLEWOOD, CA 90303 PHONE 800-421-5418	FOR VAULTS AND BUILDING FLOOR SURFACES USE FIBRECRETE, TOP COATED WITH CONOGLAZE TYPE CF (dark charcoal for vaults and multicolors for building floors).

ADDITIONAL BUILDING FLOOR MATERIALS

OMNITECH INDUSTRIES, INC. 3747 SO. INCA STREET ENGLEWOOD, CO 80110 PHONE 303-430-7300	"OMNITUFF"
PETERSON CHEMICAL CORP. 710 FOREST AVE. SHEBOYGAN FALLS, WI 53085 PHONE 414-467-2471	"TORGINOL"
GARON PRODUCTS, INC. 1924 HIGHWAY 35 CN20 WALL, NJ 07719 PHONE 800-631-5380	"CONCORD"
THORO SYSTEMS PRODUCTS 7800 N.W. 38TH STREET MIAMI, FL 33166 PHONE 305-592-2081	"THOROCLEAR"

WALL SURFACING MATERIALS FOR BUILDING INTERIORS

KEMLITE COMPANY 104 NO. CHICAGO STREET JOLIET, IL 60434 PHONE 815-727-5000	"KEMPLY"
ALLIANCE WALL CORP. P.O. BOX 920488 NORCROSS, GA 30092 PHONE 404-447-5043	"PORCELAIN ENAMEL STEEL PANEL"
OMNITECH INDUSTRIES, INC. 3747 SO. INCA STREET ENGLEWOOD, CO 80110 PHONE 303-430-7300	"EPOXY WALL TILE COATING"
BURNS AND RUSSEL COMPANY 506 SO. CENTRAL BALTIMORE, MD 21231 PHONE 800-638-3188	"SPECTRA GLAZE"

SANTANA PRODUCTS COMPANY 301-11 CLIFF STREET SCRANTON, PA 18503 PHONE 800-386-5002	"PLASTIC PANELS"
THORO SYSTEMS PRODUCTS 7800 N.W. 38TH STREET MIAMI, FL 33166 PHONE 305-592-2081	"THOROLASTIC"
THERMO MATERIALS, INC. P.O. BOX 9454 SAN DIEGO, CA 92109 PHONE 800-882-7007	"THERMO LIQUID TILE"
GARON PRODUCTS, INC. 1924 HIGHWAY 35 CN20 WALL, NJ 07719 PHONE 800-631-5380	"DURAPOXY"

SYNTHETIC LINERS FOR VAULTS

BURKE RUBBER COMPANY 2250 SOUTH TENTH ST. SAN JOSE, CA 95112 PHONE 800-669-7010	
C.W. NEAL CORP. 8404 MAGNOLIA AVE SUITE B SANTEE, CA 92071 PHONE 619-562-6438	COST FOR 5 PLY, 8 BY 8 BY 250 DENIER 45 MIL, POLYESTER REINFORCED HYPALON WITH A 3-INCH ROPE HEM USING A 3/8 DIA.POLYPROPY-LENE ROPE, INDUSTRIAL GRADE MATERIAL. COST = $543
FRED B. REVES CO. P.O.BOX 67 TUCKERTON, NJ 08087 PHONE 800-233-7176	COST FOR 3-PLY, 45 MIL HYPALON WITH A 10 X 10 X 1,000 DENIER POLYESTER SCRIM WITH A 4-INCH TOP HEM AND GROMMETS ON 18-INCH CENTERS FOR A 1,000 GAL CAPACITY (6X6X4 Ft.) COST = $500

MANHOLE COVERS

DEXOL PLASTICS, INC. P.O. BOX DRAWER R TUSCALOOSA, AL 35404 PHONE 205-556-1777	ABS, WATERTIGHT, AND ALREADY ASSEMBLED. TOTAL WEIGHT OF 34 LBS COST = $69.80
THE BILCO COMPANY P.O. BOX 1203 NEW HAVEN CT O6505 PHONE 203-934-6363 FAX 203-933-8478	MODEL J1AL MODIFIED WITH STAINLESS STEEL HARDWARE. INTERIOR DIMENSIONS ARE 2 FT. BY 2 FT. REQUEST A GASKET. CONSTRUCTED OF 1/4-INCH ALUMINUM. WEIGHT = 60 LBS - HINGED COVER. COST = $503 FOB NEW HAVEN, CT
DUR-RED PRODUCTS 4900 CECELIA STREET CUDAHY, CA 90201 PHONE 213-771-9000 FAX 213-771-9009	MODEL SEA, HINGED COVER, 1/4-INCH ALUMINUM, SPECIFY A RUBBER GASKET. DIMENSIONS ARE 2 FT BY 2 FT. COST = $379 FOB CUDAHY, CA

TOILET RISERS

ROMTEC, INC.
15587 NORTH BANK ROAD
ROSEBURG, OR 97470
PHONE 503-496-3541
FAX 503-496-0803

WHITE CROSS-LINKED POLYETHYLENE

COST FOR STANDARD RISER	1-9 = $132
	10-19 = $109
	20-39 = $107
COST FOR DISABLED ACCESS RISER	1-9 = $132
	10-19 = $129
	20-39 = $127

COST FOR THE REPLACEMENT SEAT AND LID = $30

REHCO CORPORATION
550 PATRICE PLACE, UNIT D
GARDENA, CA 90248
PHONE 213-719-1033

STAINLESS STEEL (REQUEST A HEAVY DUTY OPEN-FRONT SEAT)

COST FOR STANDARD SIZE RISER (INCLUDES OPEN FRONT, HEAVY-DUTY SEAT AND COVER)	1-9 = $113
	10-19 = $110
	20-39 = $107
COST FOR EXTENSION FLANGE TO CREATE A DISABLED ACCESS TOILET RISER	1-9 = $29
	10-19 = $27
	20-39 = $25
COST TO REPLACE THE SEAT AND COVER ASSEMBLY	1-9 = $47
	10-19 = $44
	20-39 = $41

BRUSH FOR CLEANING ALL TOILET RISERS

ROMTEC, INC.
15587 NORTH BANK ROAD
ROSEBURG, OR 97470
PHONE 503-496-3541
FAX 503-496-0803

HANDLE IS 5-FT LONG WITH FOAM RUBBER CUSHIONS. BRUSH IS 7 INCHES LONG BY 2 INCHES WIDE WITH 1-1/8-INCH BRISTLES. BRUSH IS CONNECTED TO HANDLE BY A 3/8-INCH STAINLESS STEEL PIN, WHICH ALLOWS THE BRUSH TO PIVOT ON THE END OF THE HANDLE.

COST FOR BRUSH = $35

TOILET PAPER HOLDERS

JIM ASLIN-ASLIN INDUSTRIES
P.O. BOX 294
NORTH BEND, OR 97459
PHONE 503-269-1903

TWO AND THREE ROLL LOCK BAR DISPENSER

COST FOR TWO ROLL LOCK BAR DISPENSER (INCLUDING FREIGHT)	2-9 = $19.95
	10-19 = $18.10
THIS DISPENSER IS DESIGNED FOR WALLS THAT HAVE GOOD SUPPORT BUILT IN BECAUSE THE SPACING OF THE BOLT HOLES ARE TOO SHORT FOR CONNECTING TO EXISTING STUDS.	20-99 = $16.25
	100 + = $14.25

COST FOR THE THREE ROLL LOCK BAR DISPENSER(INCLUDING FREIGHT)	2-9 = $21.95
THIS DISPENSER IS DESIGNED SO THE DISTANCE BETWEEN THE BOLT HOLES (16 inches) WILL MATCH THE STUDS IN THE WALLS OF OLD TOILETS.	10-19 = $19.65
	20-99 = $17.85
	100 + = $15.25

ENVIRONMENTAL CARE PRODUCTS
300 RANGER ST.
BREA,CA 92621
PHONE 714-528-8142

KATRIN MILE-LONG DISPENSER - STAINLESS STEEL

COST FOR THE LARGE KATRIN DISPENSER = $19.00

DISPENSER HOLDS 5,280 FT OF SINGLE PLY PAPER

DISPENSER HOLDS 2,640 FT OF TWO PLY PAPER

COST FOR SMALL KATRIN DISPENSER = $12.50

DISPENSER HOLDS 2,250 FT OF SINGLE PLY PAPER

DISPENSER HOLDS 1,125 FT OF TWO PLY PAPER

SCOTT JUMBLE ROLL TISSUE (JRT)
GSA CONTRACT NO. GS-02F-53388 -COST FOR THE SCOTT DISPENSER PLASTIC = $21 TO $22
BAKED ENAMEL = $28

GRAB BARS (HAND RAILS) FOR PEOPLE WITH DISABILITIES

ROMTEC, INC.
15587 NORTH BANK ROAD
ROSEBURG OR 97470
PHONE 503-496-3541

COST OF GRAB BARS 24-INCHES LONG = $40
36-INCHES LONG = $45
42-INCHES LONG = $50

GRAB BARS ARE STAINLESS STEEL
AND MOUNTING HARDWARE IS INCLUDED.

MCKINNEY
1591 INDIANA STREET
SAN FRANCISCO, CA 94107
PHONE 415-282-7800
FAX 415-282-1121

BOBRICK WASHROOM EQUIPMENT, INC
11611 HART STREET
NORTH HOLLYWOOD, CA 91605-5882
PHONE 818-982-9600
FAX 213-875-1104

COST OF GRAB BARS STAINLESS STEEL
24-INCHES LONG = $23.64
36-INCHES LONG = $26.94
42-INCHES LONG = $28.58
48-INCHES LONG = $30.23

12-INCH DIAMETER ABS PLASTIC PIPE

ROMTEC, INC.
15587 NORTH BANK ROAD
ROSEBURG, OR 97470
PHONE 503-496-3541

COST OF 12-INCH DIAMETER ABS PIPE = $15 PER FT

COMPLETE PREMANUFACTURED VAULT TOILET SYSTEM

ROMTEC, INC.
15587 NORTH BANK ROAD
ROSEBURG, OR 97470
PHONE 503-496-3541

COST INCLUDES A 750 GAL VAULT, MANHOLE COVER, DISABLED ACCESS TOILET RISER, COMPLETE BUILDING AND VENTING SYSTEM.
COST = $4,985

SECTION 7

WHY EXISTING VAULT AND PIT TOILETS HAVE ODOR PROBLEMS

History shows that the building, surrounding the hole in the ground, evolved slowly. First, there was simply a hole in the ground with two small logs (spaced appropriately) over the top. As the population came closer together, walls were erected for privacy. The walls were quickly followed by a roof and in time a door was added to complete the enclosure.

During this evolution there were no vent stacks anywhere. Only in recent history did the vent stack appear. In very recent times, designers sized the vents by aesthetics rather than functional considerations. Now let's look at what causes the odor problems in existing vault toilet buildings (other than the obvious).

1. The most prevalent and main cause is when the air flow within the building is flowing up from the vault, into the use compartment, bringing with it the foul smelling waste odors.

2. The waste odors that are absorbed by the concrete or concrete block walls within the vault are another major source. These absorbed odors (very sour), combined with the contained waste odors flowing with the air flow up out of the vault into the use compartment, make the compartment obnoxious.

3. The odors absorbed by the concrete floor in the use compartment and by porus interior wall materials also contribute to the odor problem.

4. Waste particles, that collect in cracks and crevices due to 90° floor to wall surfaces and 90° corners, help to cause odors and attract flies.

5. Cracks and crevices in some of the toilet risers can collect odor causing urine and fecal particles and are rarely cleaned thoroughly.

Items 2 through 5 are simple to solve and would be less of a problem if the air flow were reversed (as it should be) and forced to flow down the toilet riser into the vault and up out of the vent stack. Remember, it is still necessary to eliminate the causes of odor shown in items 2 through 5 because, when the venting is correct, we want the least amount of odor to leave the building because of the detrimental downwind effects.

Item No. 1 needs further clarification so that the reader can see <u>why</u> the air flow comes up from the vault into the use compartment.

Since odors were now a problem, due to the complete enclosure, openings were placed in the walls to allow fresh air into the building (attempting to dilute the odor).

During this evolution there were no vent stacks anywhere.

Only recently (in history) did the vent stack appear.

In very recent times, designers sized the vents by aesthètic rather than functional considerations.

Consequently, because of all of the above reasons, the designs that now exist have a variety of errors which result in odor problems within the vault and pit toilet buildings.

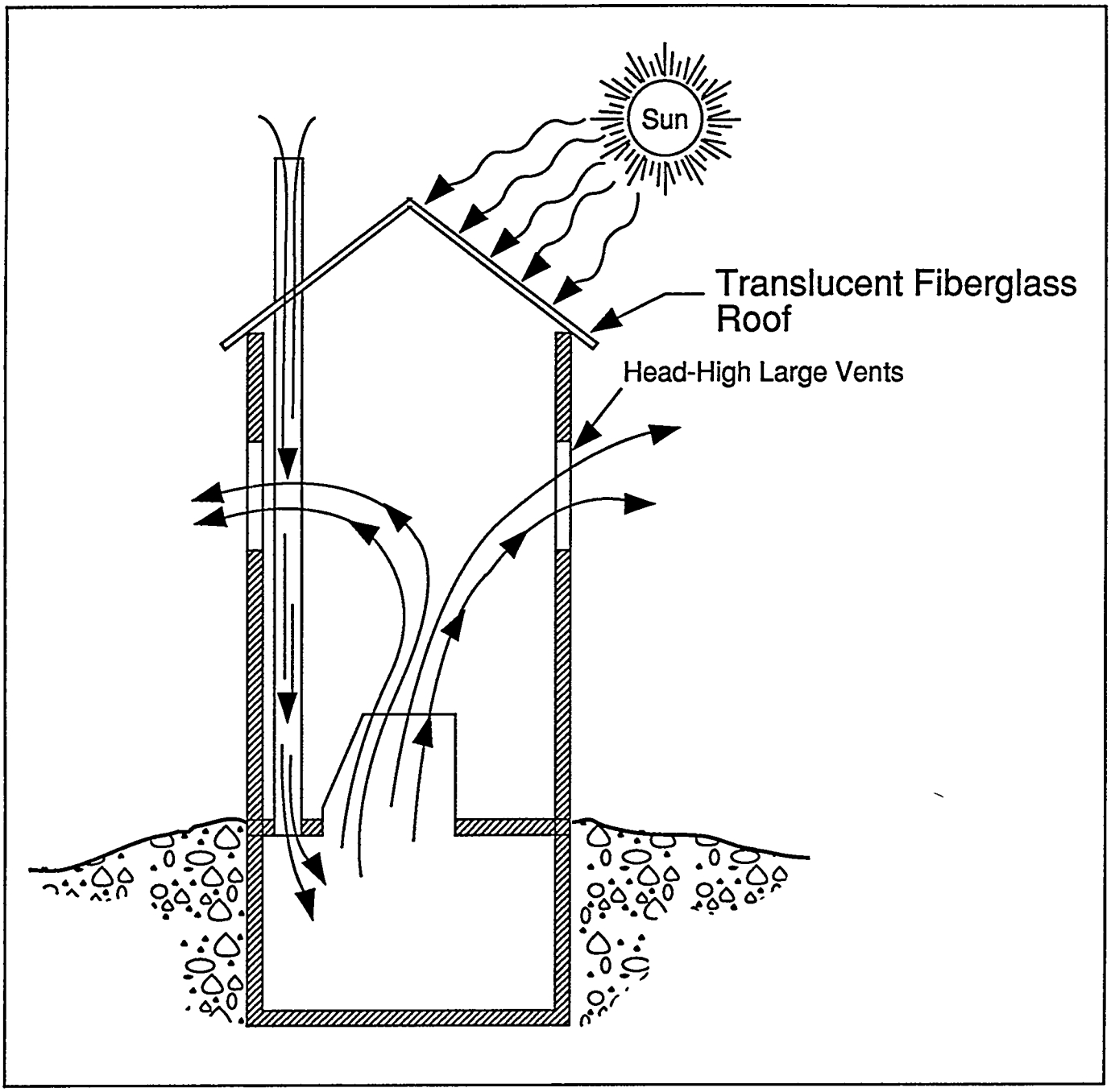

Figure 16

Figure 16 illustrates how the sun, shining through the translucent fiberglass roof (with no wind blowing), creates heat within the building. This hot air rises and escapes through the large screened vents on both sides of the compartment. The replacement air (to resupply the hot air leaving the building) comes up from the vault or pit and the replacement air for the vault or pit comes down the small vent stack. The obvious result is odors are brought up into the building compartment.

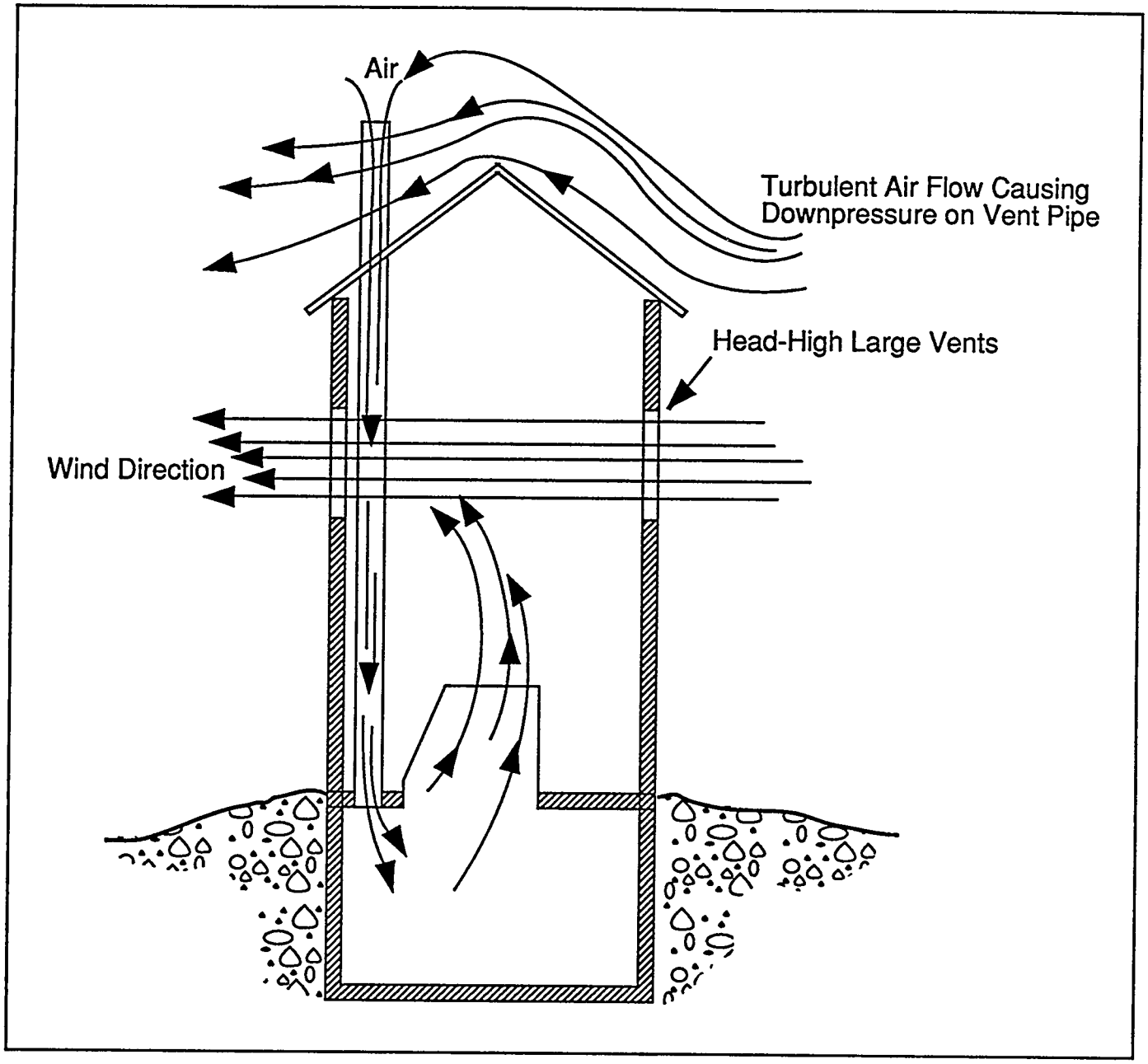

Figure 17

Figure 17 clearly illustrates what happens when the wind blows through a typical single unit toilet building. The building vent openings generally exceed 400 sq inches on each side and the 4-inch vent stack has only a 12-sq inch opening.

There are two negative forces at work here. The first is due to the amount of air blowing through the building causing a negative pressure in the building and drawing air out of the vault. The small 4-inch diameter pipe cannot compete with the large openings in the building. The only way the air in the vault can be drawn up the vent stack is by an aspiration effect caused by the wind blowing across the top of the pipe.

Even if the vent pipe were placed higher up so that the top of the pipe is in the steady state (laminar) flow of the wind blowing across the top of the pipe, the pipe is still too small. A two mph wind can only aspirate approximately eight cfm in a wind tunnel, which represents the best of conditions.

This brings us to the second negative force at work. In conjunction with the vent pipe being too small, the pipe is not high enough above the roof. By being placed so close to the roof top (and in some cases, not even

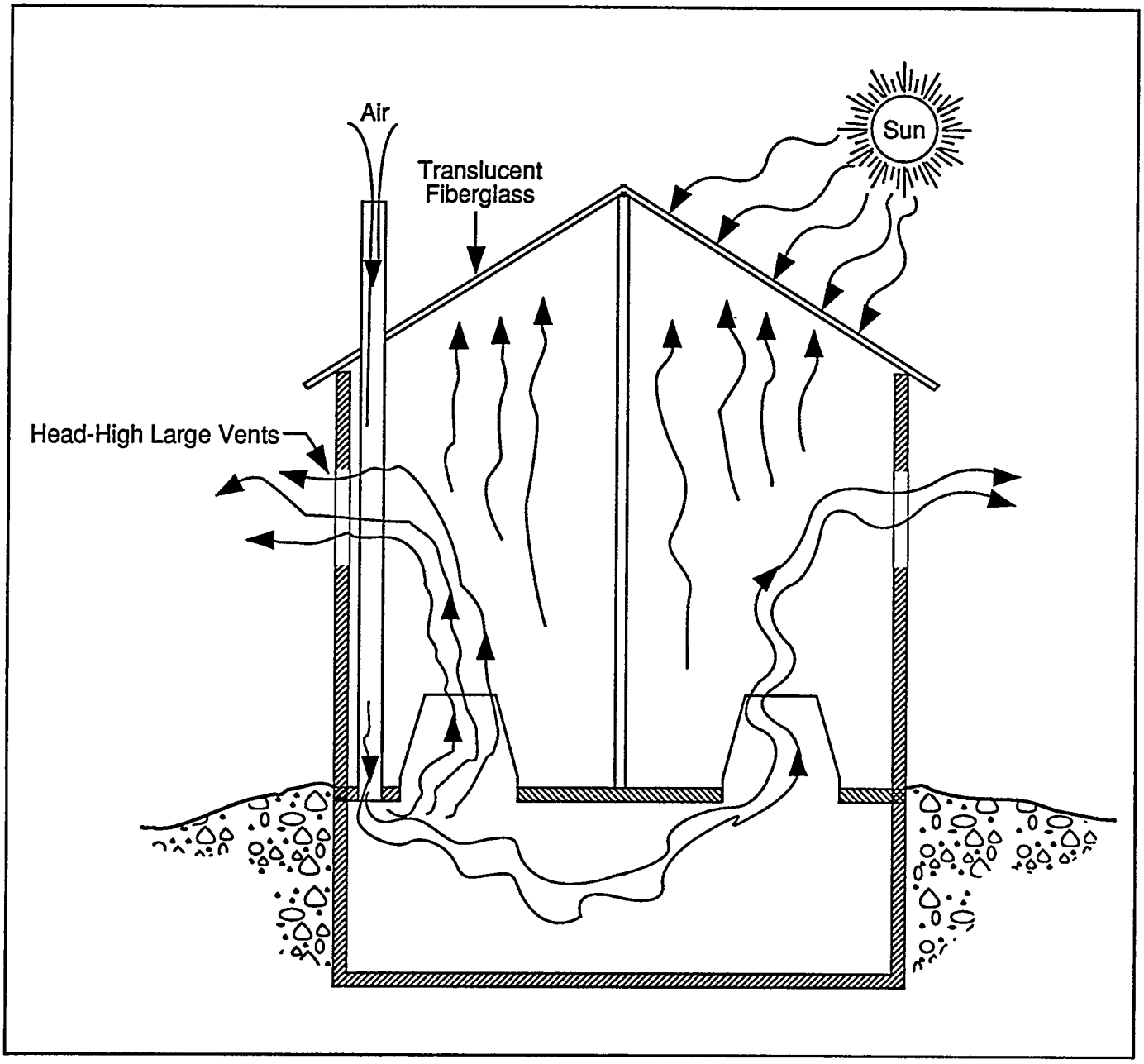

Figure 18

protruding above the ridge of the roof) the turbulent air flow over the roof causes a down pressure on the vent and forces air down into the vault (*as shown in Figure 17*) and subsequently up into the building compartment. This is a complete reversal of what is supposed to happen.

Figure 18, above, illustrates a two unit toilet design causing the same problem as the single unit design shown in *Figure 16.*

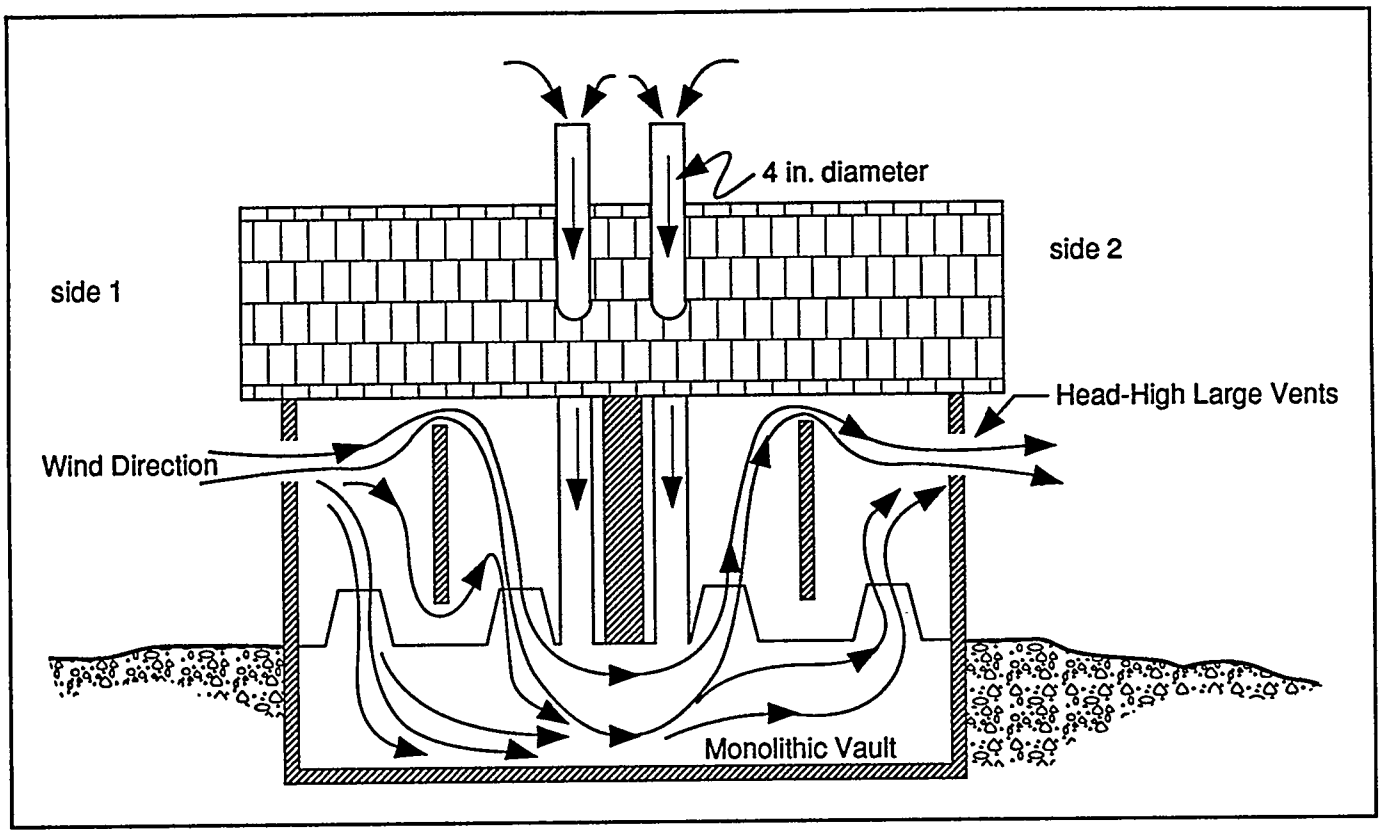

Figure 19

Figure 19 illustrates a four unit toilet with the wind blowing. NOTE: A two unit toilet with a single vault beneath two toilet risers in separate compartments would result in the same air flow condition.

The wind enters one compartment and slightly pressurizes that compartment. The pressurized air has only one place to go and that is down through the toilet riser openings.

At the same time, the wind blowing around and past the building causes a negative pressure to develop in the down wind compartment, resulting in the air in the compartment being drawn out of the compartment (through the building side vent).

The small vent pipes for the vault cannot aspirate enough air out of the vault to even begin competing with the flow of air through the building. The building vents are way too large and the little vault vent pipe is way too small.

All of the above reverse venting situations can be compounded by placing vertical screens around the top of the vent pipe or by placing screens across the top of the pipe that are too fine. The screens offer resistance to air flow and reduce or eliminate the ability of the wind to cause an aspiration effect out of the pipe. Screens also get clogged due to cobwebs, leaves, pine needles, and dust and they are rarely cleaned.

There are, or course, hundreds of design configurations and certainly too many to cover in this section. The above designs are representative of what the typical problems are that result in odorous conditions existing in the buildings.

SECTION 8

AN INVENTORY OF TYPICAL VAULT TOILET CONTENTS

The following debris is from a men's two unit vault toilet before pumping began:

68 cans	59 plastic bags 3-1/2 gal capacity	26 full rolls of toilet paper
21 styrofoam cups	11 bottles	8 empty plastic wrappers
7 sticks	6 ponderosa pine cones	4 wads of aluminum foil
4 mens' boxer shorts	3 plastic cups	3 small rags
3 mens' jockey shorts	3 boys' jockey shorts	2 boy scout caps
2 wires (4-ft long)	2 bent wires (2-ft long)	1 cloth dinner napkin
1 T-shirt	1 apple	1 large bag of 8 diapers
1 strip of rubber (1 by 20 inches)	1 section of cardboard	1 large rag
1 tube of antiseptic (3/4 full)	1 small cardboard donut container	1 large plastic bowl
1 toilet paper holder in good condition	1 sanitary napkin	1 contraceptive
1 plastic fork	1 paper towel	1 long piece of string
1 plastic camera strap (2-1/2 ft long)	1 hypodermic syringe	1 plastic straw
1 large piece of plastic toy (4"by 10")	1 wire container for solid deodorant block	1 paper bag
1 cap from spray can	1 cubic yard of rocks	

The remaining debris is from the same men's two unit vault toilet after screening the pumped contents.

28 paper towels approx 1-gal capacity	10 plastic bags	8 aluminum can pull tabs
7 wads of aluminum foil	3 wads of bubblegum	3 jockey shorts
3 ice cream bar sticks	2 combs	2 plastic caps
2 10-qt buckets of paper plus numerous cigarette packs, gum wrappers and lots of small rocks	1 whittling stick	1 orange
1 name plate from toilet	1 squirrel eaten pinecone	1 large weed
1 18-in long rope	1 small piece of wood	1 contraceptive
1 small weiner package	1 wine bottle cork	1 flash bulb

1 styrofoam cup

1 wool mitten

1 peach pit

1 small plastic tube

1 1/2 pint drink container

1 Copenhagen snuff cap

1 chicken bone

1 plastic spoon

☆U.S. GOVERNMENT PRINTING OFFICE: 1991- 588-259/59310