U.S. DEPARTMENT OF AGRICULTURE
FOREST SERVICE REGION 8
SUMTER NATIONAL FOREST
LONG CANE DISTRICT

LC 257 354 356 FT

L256-1 – 0.76 Miles – Reconstruction

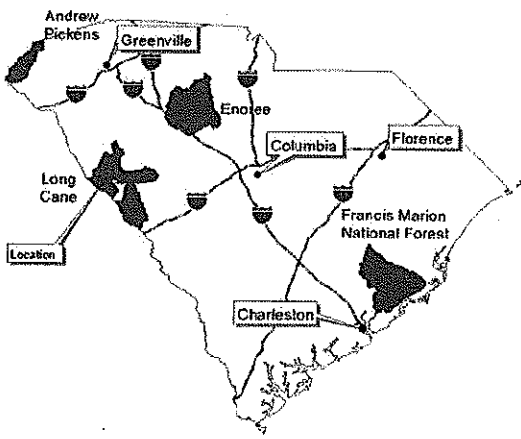

Jacquelyn L. Bryant 12/07/2011
Forest Engineer Date

12/12/2011
District Ranger Date

01/31/2012
Engineering and Recreation Staff Officer Date

01/31/2012
Forest Supervisor Date

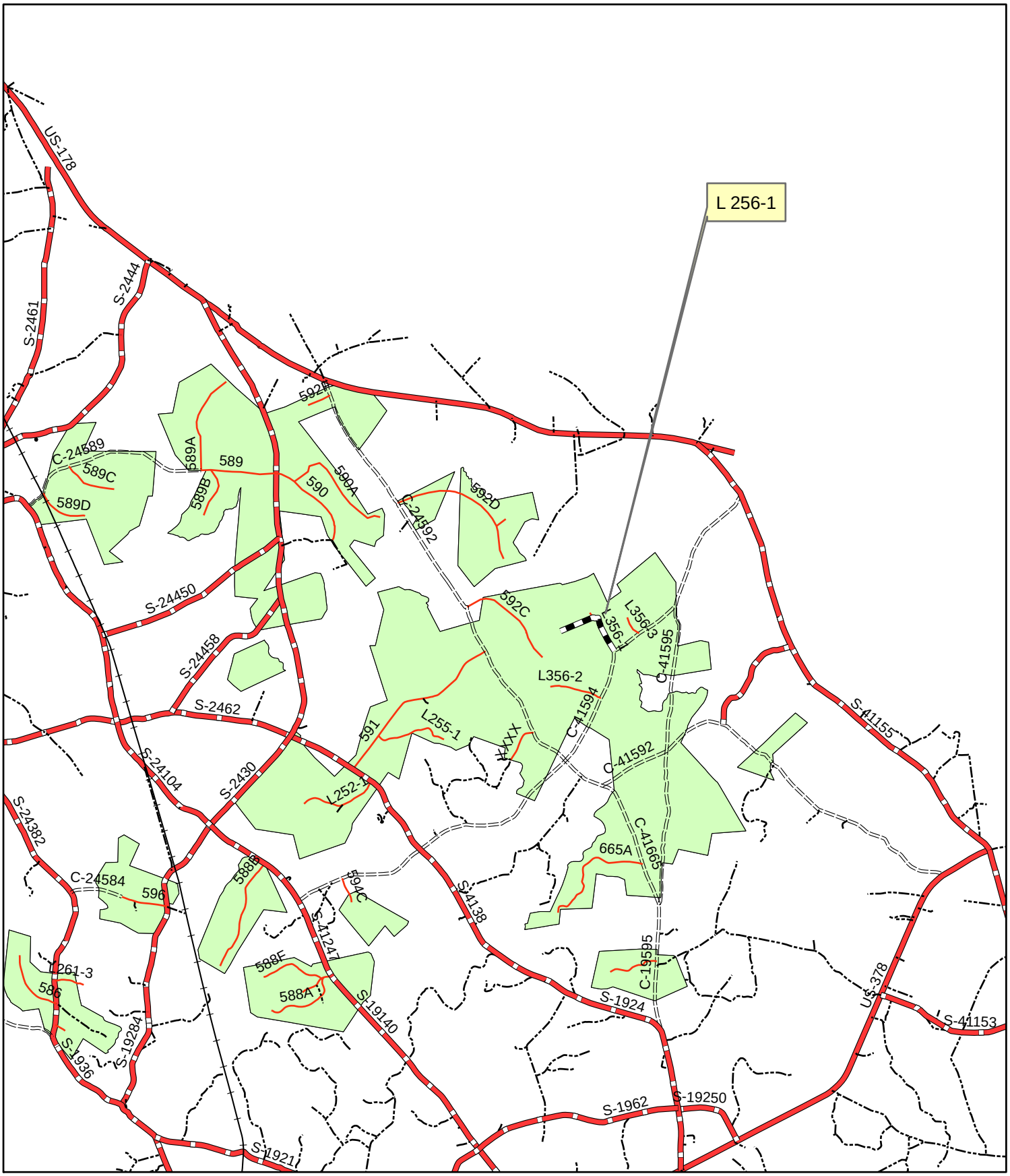

0 0.5 1 2 Miles

Legend

PROJECT

LC 257 354 356 FT

ESTIMATE OF QUANTITIES

				ROAD NUMBER	L256-1	-	-	-	-	-	
				MILE POST (MILES)	0.76	-	-	-	-	-	
ITEM NO.	DESCRIPTION	METHOD OF MEASURE	UNIT	REVISION DATE	QUANTITIES						REMARKS
24901	Composite Road Construction	CQ	LS	2006	1.00						
25111	Hand-placed riprap,Class one man Riprap	CQ	Ton	2006	10.00						
30109	Aggregate surface course, grading CR14, compaction method A	CQ	Ton	2006	405.00						
60201	60 inch RCP, Class 111	CQ	Foot	2006	40.00						
61902	Farm Gate	CQ	Each	2006	1.00						
62501	Seeding, and Mulching Dry method	CQ	Acre	2006	1.00						

U.S. DEPARTMENT OF AGRICULTURE

FOREST SERVICE REGION 8
SUMTER NATIONAL FOREST
LONG CANE DISTRICT
LC 257 354 356 FT

L 256-1
GOLD MINE A

STATION	**DESCRIPTION**
0+00	INTERSECTION WITH C41594
0+00 – 1+25	CONSTRUCT CROWN INTERSECTION L=125 W=16 A=115 (R) = 30 PLACE 75 TONS OF AGGREGATE, GRADE CR14 6” LOOSE,
1+25 – 18+00	SPOT SURFACE, PLACE 100 TONS OF AGGREGATE, GRADE CR14 4” LOOSE, WHERE DIRECTED BY THE ENGINEER
1+25	REMOVE EXISTING WOOD BARRICADE INSTALL FARM GATE • SEE GATE DRAWING DETAILS FOR ACCESSIBILITY REQUIREMENTS.
3+00	TIMBER SALE BOUNDARY
5+00	CONSTRUCT DIP RIGHT
6+00	CONSTRUCT DIP RIGHT
8+00	CONSTRUCT DIP RIGHT
10+00	CONSTRUCT DIP RIGHT
10+50	INTERSECTION WITH WOOD ROAD FOLLOW WOOD ROAD

	DO NOT BLOCK EXISTING ROAD
13+00	CONSTRUCT DIP LEFT
15+50 – 23+10	**EXCAVATION REQUIRED,** **REMOVED MATERIAL SHALL BE USED TO BACKFILL STATION 19+29 CULVERT,** **CULVERT SHALL BE 24" BELOW ROAD SURFACE.** **EXCAVATION SHALL BE INCIDENTAL TO PAY ITEM 602 AND 249.**
15+50	CONSTRUCT DIP LEFT
16+00	CREST
17+50	CONSTRUCT DIP RIGHT
18+00	CONSTRUCT DIP RIGHT
18+00 – 20+00	PLACE 80 TONS OF AGGREGATE, GRADE CR14 6" LOOSE,
19+29	INSTALL 60" X 40' RCP DRAIN LEFT PLACE 10 TONS OF RIP RAP ON FILL SLOPE
20+00 – 39+00	SPOT SURFACE PLACE 100 TONS OF AGGREGATE, GRADE CR14 4" LOOSE, WHERE DIRECTED BY THE ENGINEER
20+50	CONSTRUCT DIP LEFT
22+00	CREST
23+10	CONSTRUCT DIP LEFT
24+40	POINT OF INTERSECTION
	CONSTRUCT "T" INTERSECTION WITH 100' RAMP SEE DRAWING FOR DETAIL
25+00	CONSTRUCT DIP LEFT
27+00	CONSTRUCT DIP LEFT
28+00	CREST
30+50	CONSTRUCT DIP RIGHT
32+40	CONSTRUCT DIP RIGHT **EXISTING CEMENTERY 30' LEFT SHALL BE PROTECTED**
33+90	**EXISTING CEMENTERY 30' LEFT SHALL BE PROTECTED**

34+50	CONSTRUCT DIP RIGHT
36+00	CONSTRUCT DIP RIGHT
37+80	CONSTRUCT DIP RIGHT
39+50	BEGINNING TRANSITION TURNAROUND
39+00 – 40+00	PLACE 50 TONS OF AGGREGATE, GRADE CR14 4” LOOSE,
39+00	OBTAIN FULL TURNAROUND, 100’ X 100’
40+00	END OF PROJECT AND TURNAROUND

NOTES

1. **SEEDING AND MULCHING ALL DISTURBED AREA**
2. DIP INCLUDE LEADOFF DITCH
3. GRADE TO DRAIN THROUGHOUT
4. CLEARING AND GRUBBING 20’ WIDE
5. USE 249 SPEC
6. CREST = EXISTING HIGHER PLACE ON THE VERTICAL CURVE
7. PLACE APPX 10 TONS OF AGGREGATE TO EACH DIP, OTHERWISE AS NOTED.
8. SCATTER CONSTRUCTION SLASH
9. DO NOT DISTURBE CEMENTERY AREA

CROWN SECTION

N.T.S.

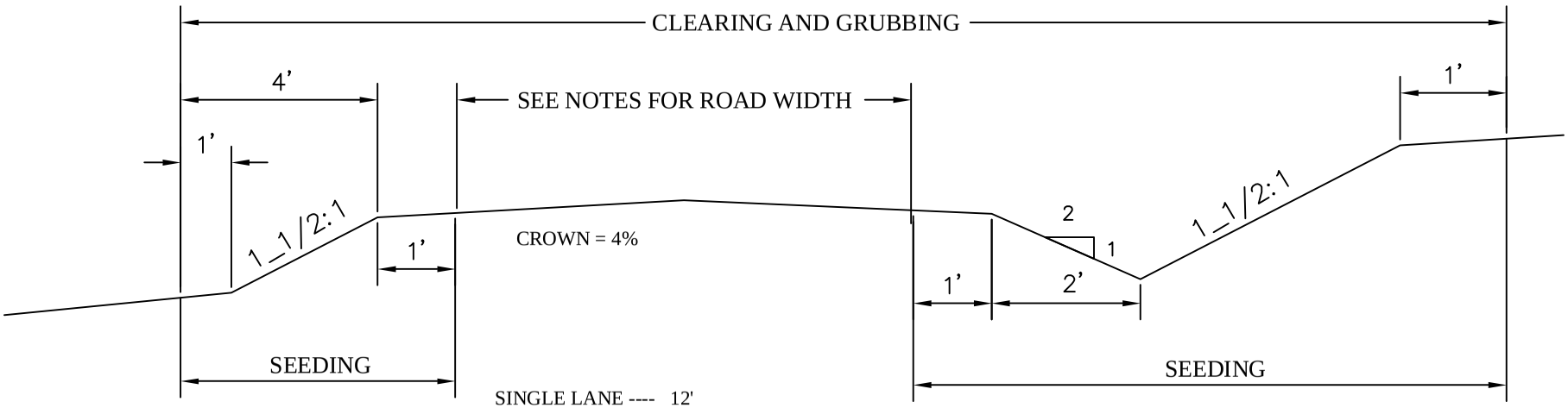

SINGLE LANE ---- 12'
DOUBLE TRACK ----- 20'
CURVE WIDENING ---- AS SHOWN ON THE DRAWING

NOTE: MOTOR GRADER FINISH IS REQUIRED.

OUTSLOPE TYPICAL

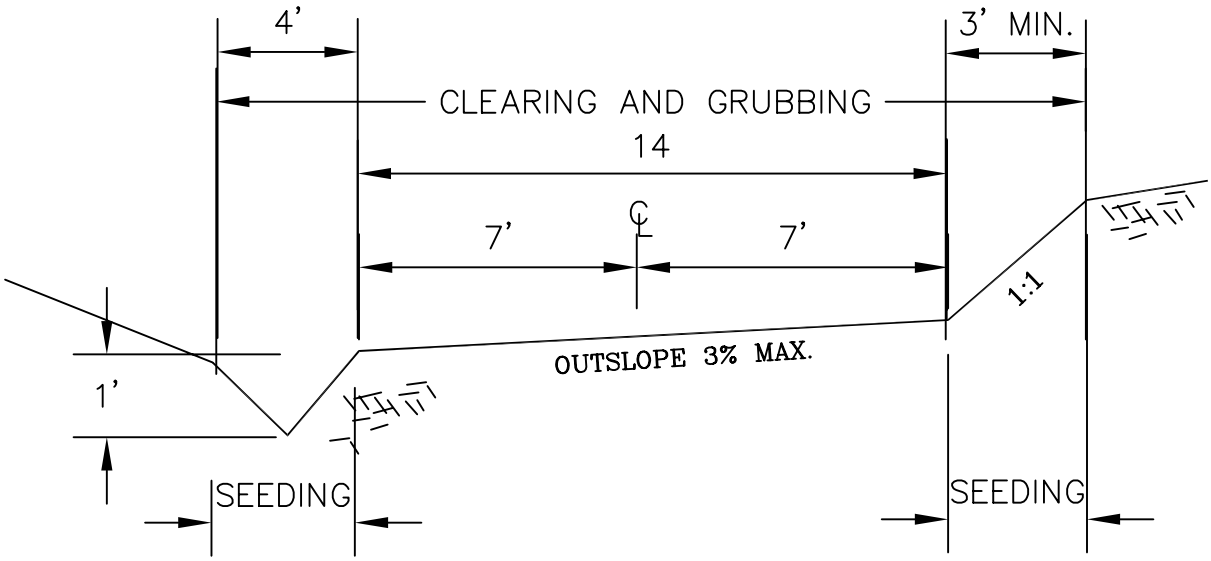

OUTSLOPE TYPICAL

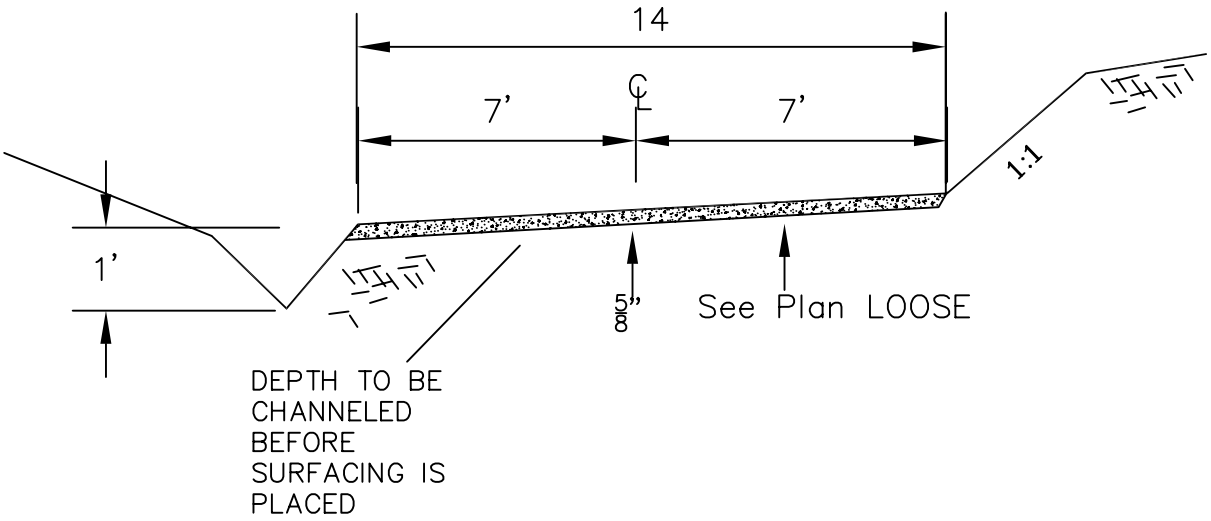

LEAD-OFF DITCH

NOT TO SCALE

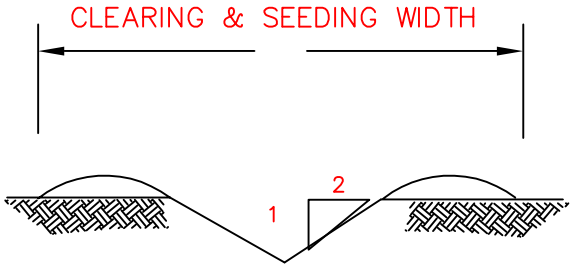

TYPICAL SECTION

NOT TO SCALE

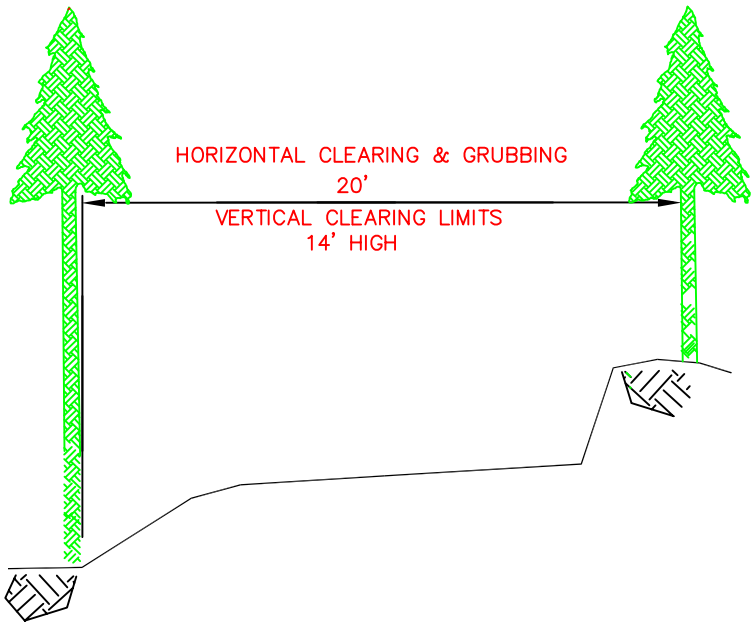

SURFACING SHALL BE TRUCK SPREAD TO A THICKNESS OF _____ (SEE NOTES) LOOSE DEPTH THE CONTRACTOR SHALL PREPARE THE SUB GRADE, SHAPE AND FINAL GRADE THE SURFACING TO THE CONFORM TO THE TYPICAL SECTION. THE CONTRACTOR SHALL LIMIT CHANNELING TO THE TYPICAL SECTION. THE CONTRACTOR SHALL LIMIT CHANNELING TO THE AMOUNT OF SURFACING THAT CAN BE DONE IN THAT DAY. SURFACE SHALL BE PLACED IN A SINGLE LAYER THICKNESS UNLESS APPROVED BY THE ENGINEER. AT THE END OF THE EACH WORKING DAY THE CONTRACTOR SHALL SPREAD AND SHAPE ALL SURFACING HAULED THAT DAY. THERE WILL BE NO EXCEPTIONS UNLESS APPROVED IN WRITING BY THE ENGINEER.

SURFACING SECTION

NOT TO SCALE

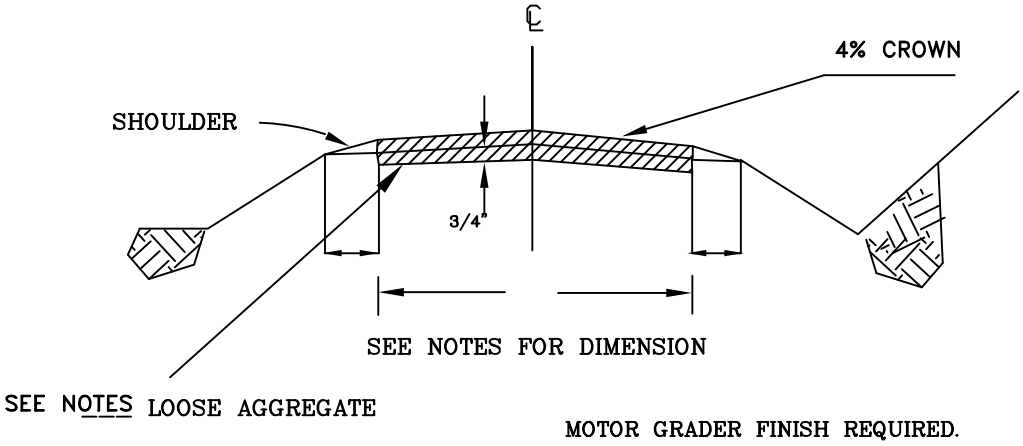

MOTOR GRADER FINISH REQUIRED.

SURFACING GRADATION:

SUMTER -- GRADING No. CR14

SIEVE DESIG.	% BY WEIGHT PASSING
2"	100
1 –½"	95 – 100
1"	70 – 100
½"	35 – 65
#4	10 – 40

DIP TYPICAL

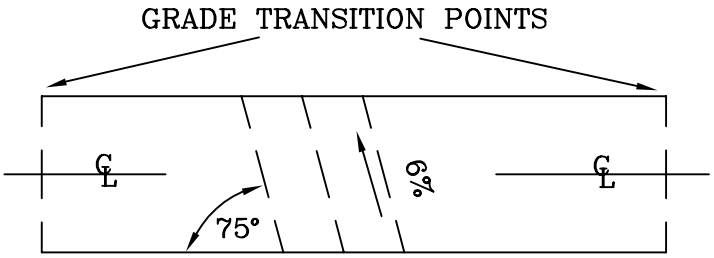

DIP
PLAN VIEW

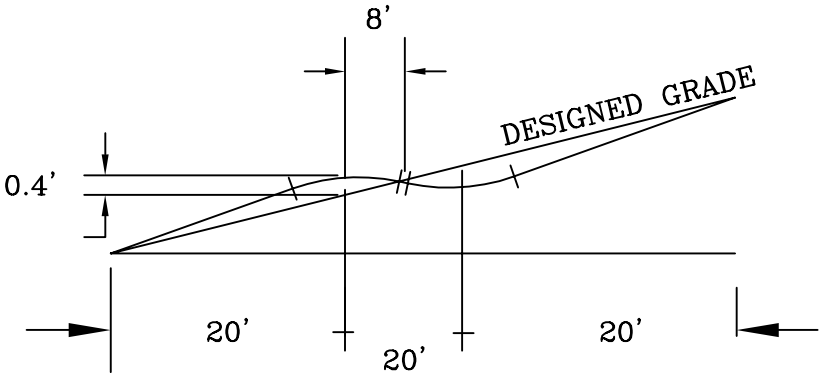

DIP
PROFILE VIEW

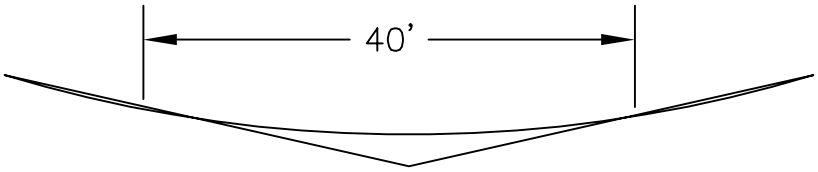

NATURAL DIP
PROFILE VIEW

OF

ENTRANCE TYPICAL SECTION

NOT TO SCALE

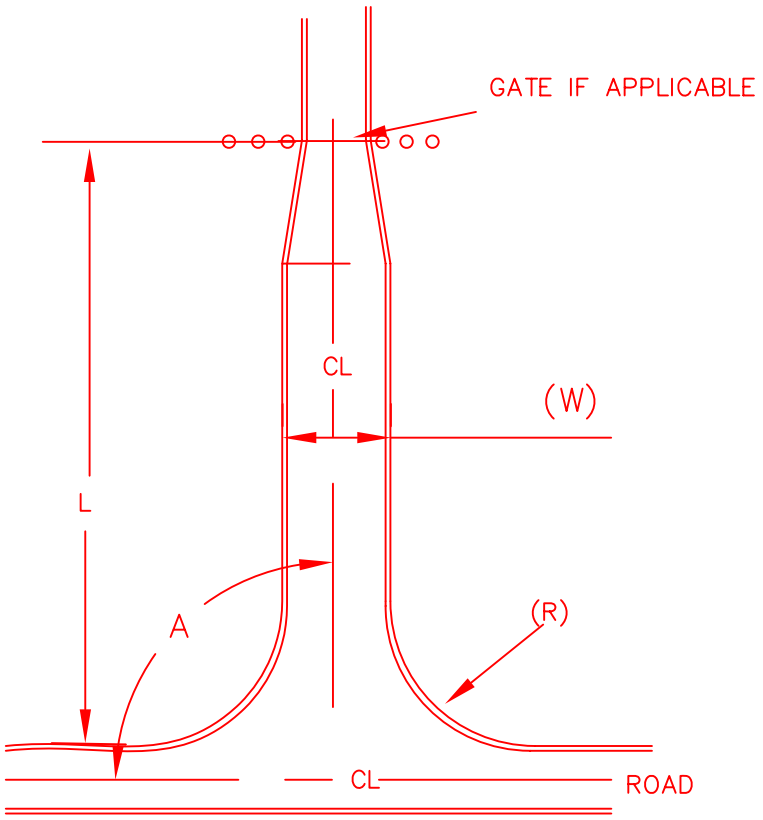

INTERSECTION L
256-1
STATION 24+40
NOT TO SCALE

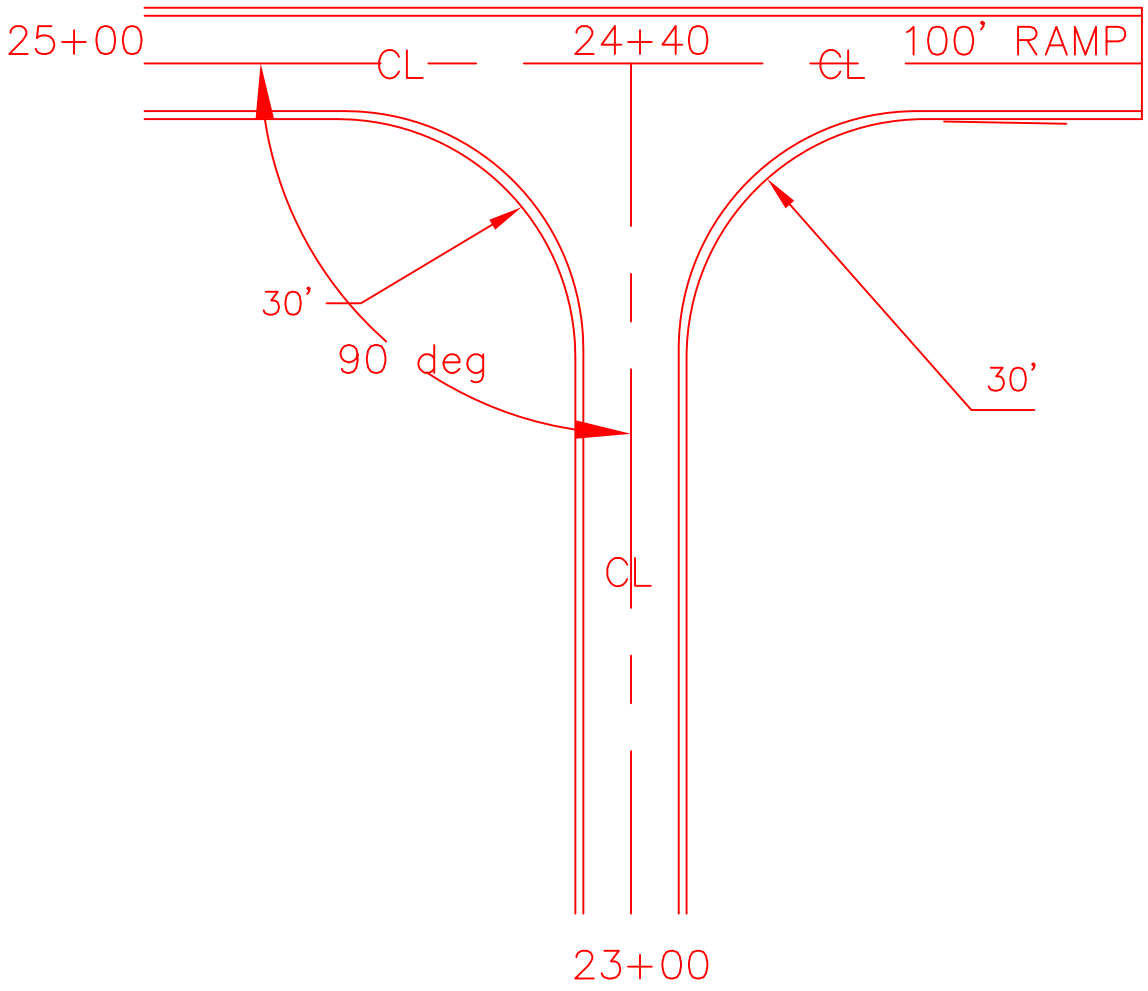

CULVERT SECTION

NOT TO SCALE

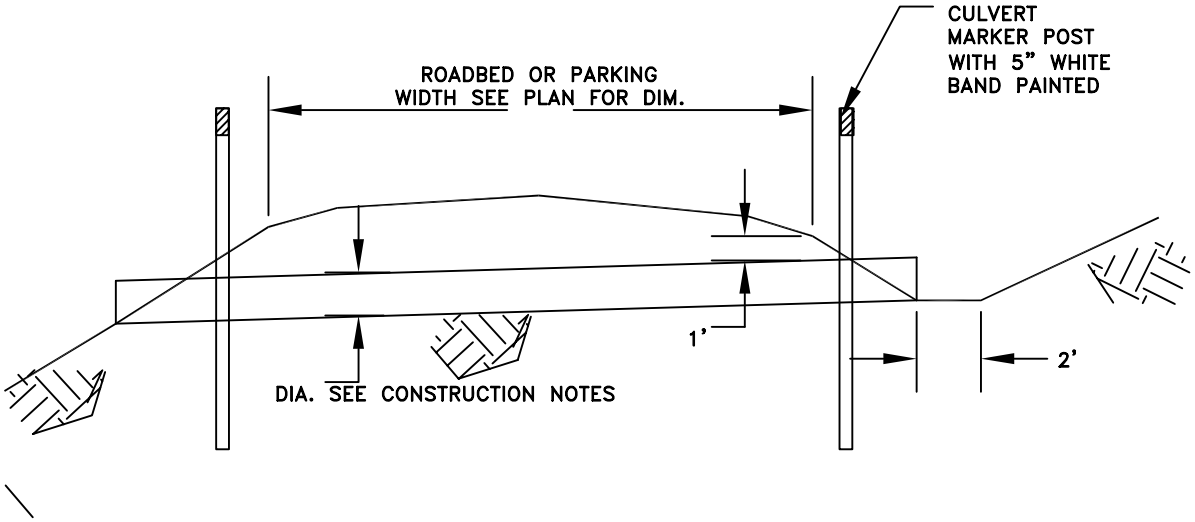

CULVERT SECTION WITH RIPRAP

NOT TO SCALE

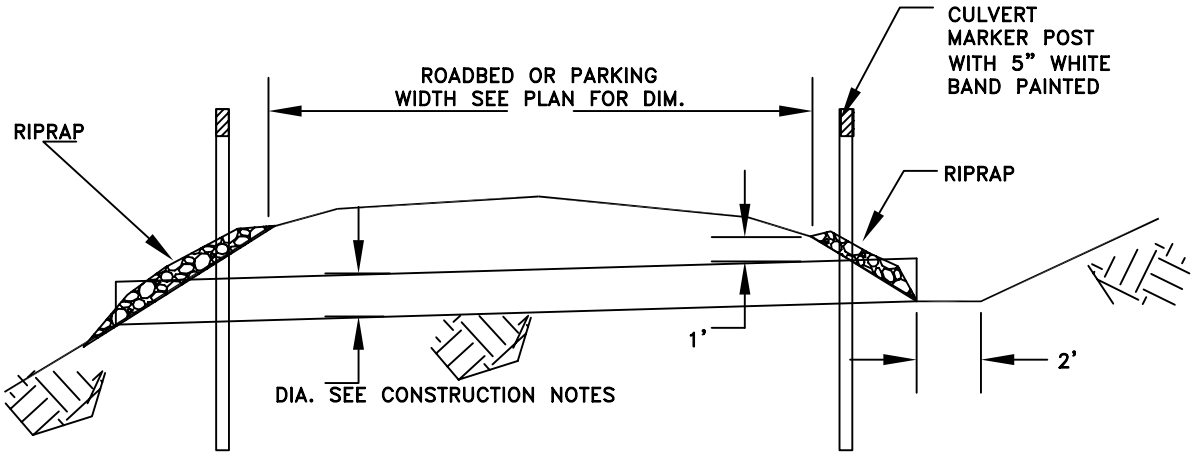

GENERAL NOTES:

1. CAMBER IN PIPE TO BE AS STAKED BY THE ENGINEER
2. POST MARKER SHALL BE INCIDENTAL TO THE PAYITEM 602
3. POST MARKER SHALL BE 3" MIN TREATED WOOD POST WITH A 5" WHITE BAND PAINTED ARROUND TOP.
4. POST MARKER SHALL BE LOCATED ON EACH SIDE OF ROAD VISIBLE TO ON COMING TRAFFIC.

FARM GATE DETAIL

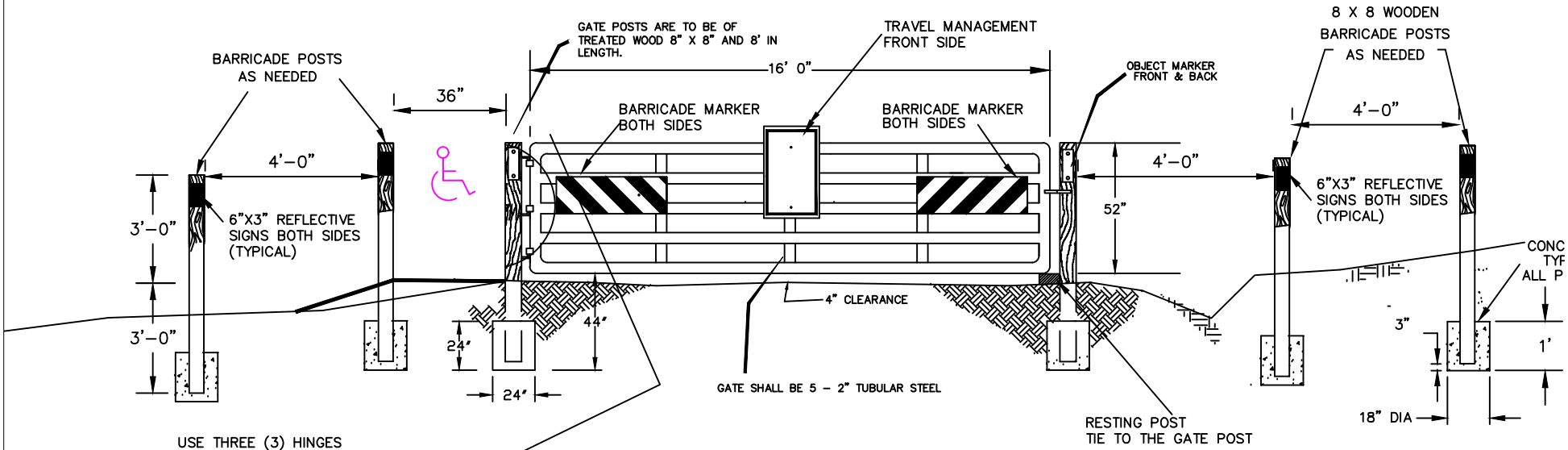

USE THREE (3) HINGES

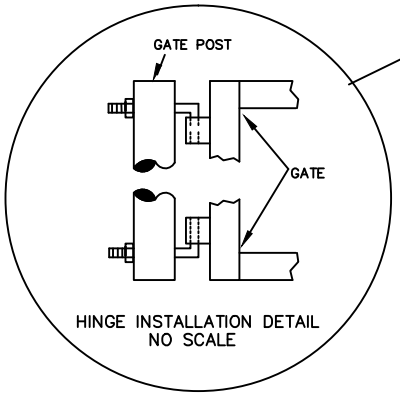

HINGE INSTALLATION DETAIL
NO SCALE

NOTES:

1. WOODEN POSTS SHALL BE TREATED WITH 0.40 OF ACQ – OR CHROMATE COPPER ARSENATE (CCA), MINIMUM RETENTION 0.40 POUNDS PER CUBIC FOOT
2. GATE SHALL BE 16 GAUGE STEEL FARM TYPE, 2" TUBULAR 52" HIGH X 16' WIDE. ALL FARM GATES SHALL HAVE STANDARD RED COLOR FOR PAINT.
3. CONTRACTOR SHALL FURNISH AND INSTALL 3 GATE HINGES AND PROVIDE LOCKING CHAIN TO COR, 1/4" X 6' LONG, GALVANIZED AT EACH FARM GATE INSTALLATION.
4. ALL SIGNS, OBJECT MARKERS, AND HARDWARE SHALL BE FURNISHED AND INSTALL BY THE CONTRACTOR. FOREST SERVICE WILL APPLY STICKERS TO TRAVEL MANAGEMENT SIGN.
5. SIGN SUPPLIER INFORMATION:

   UNICOR; PHONE 1-805-735-6211, FAX 1-805-735-4507

   BARRICADE MARKERS FOR GATES
   ALUMINUM, UNICOR PT#ALSP0025
   RED/WHITE, RIGHT, DIAMOND GRADE, 8X24

   BARRICADE MARKERS FOR GATES
   ALUMINUM, UNICOR PT#ALSP0025
   RED/WHITE, LEFT, DIAMOND GRADE, 8X24

   TRAVEL MANAGEMENT P7115
   ALUMINUM, UNICOR PT#ALSP0075
   12X18, HI-INTENSITY

   OBJECT MARKER,
   ALUMINUM, UNICOR PT#ALDC0025,
   YELLOW 3"X6", HI-INTENSITY

ACCESSIBILITY NOTES:

1. ACCESSIBLE ACCESS CAN BE PROVIDED ON EITHER SIDE OF THE GATE, WHERE GROUND CONDITION AND SHAPE FIT BETTER.
2. DO NOT BLOCK ROAD DITCH, RELOCATION MAY BE NEEDED
3. ACCESS SHALL BE 36" WIDE AT ROAD HEIGHT, BYPASSING SHALL MATCH ROAD SURFACE WITHOUT ANY OBSTACLES.
4. HINGE BOLTS SHALL BE FREE OF ANY SHARP EDGES, ON THE ACCESSIBILITY ACCESS SIDE.

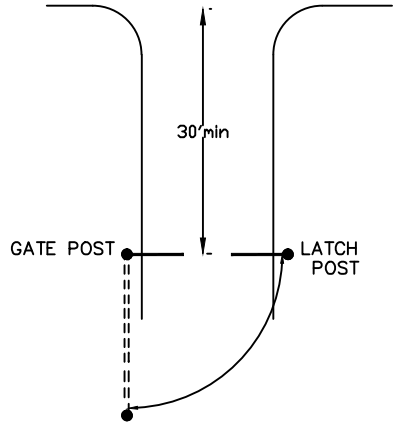

GATE PLAN

NOT TO SCALE

LONG CANE SEEDING

All disturbed soil shall be seeded according to the following specification:

1. MATERIALS AND APPLICATION RATES

The contractor shall provide the following listed material:

a. Fertilizer: Fertilizer shall be standard commercial grade which will release slowly over an eight to nine month period and provide the minimum percentage of available nutrients designated.

   Fertilizer ……. 10-10-10 ….. applied at a rate of 1000 lbs. per acres.
   Lime …….. applied at a rate of 2000 lbs. per acres.

b. Seed: Grass seed shall be packaged separately from fertilizer and contain the designated types of seed for application at the designated rates.

August 1 to March 1

i. Annual Rye Grass ……. 30 lbs. per acres
ii. Brown Top Millet…….. 20 lbs. per acres
iii. Pensacola Bahia …… 40 lbs. per acres
iv. Redland Clover ……. 5 lbs. per acres

March 2 to July 31

v. Annual Rye Grass ……. 30 lbs. per acres
vi. Brown Top Millet…….. 20 lbs. per acres
vii. Pensacola Bahia …… 40 lbs. per acres

Other appropriate native seed may be available and used when approved by the CO.

Furnish a product certification for each kind or type of seed.

c. Dry Mulch: Mulch shall be hay, straw or wood cellulose fiber applied at the rate of 3000 lbs per acres. Shall be free from weeds mold or other objectionable material.
   Immediately after seeding a layer of mulch shall be applied.

   No tackifier of mulch required.

SPECIFICATION AND SPECIAL PROJECT SPECIFICATION LIST

Sale Name	LC 257 354 356 FT							
Road Number	L256-1							
Road Name								
Termi Miles (From)	0							
Termi Miles (To)	0.76							
C or R	R							
Traffic Service Level	D							
Maintenance Level	1							

Standard Specification For Construction of Roads and Bridges on Federal Highway Project

FP-03

Quarry Location	Greenwood

Standard Spec or SPS Number	Revision Date	Specifications that are referenced by other "X" denotes applicable standard specs. or special							
Standard Spec	2003								
101 - 150	"------"	Apply	To	All	Contracts				
249		X							
251		X							
301		X							
602		X							
619		X							
625		X							

FS SUPPLEMENTS SPECIFICATION FP03

LC 257 354 356 FT

Table of Contents

Table of Contents 1

Preface 3

101 - Terms, Format, and Definitions 3

101.01 Meaning of Terms 3

101.01 Meaning of Terms 3

101.03 Abbreviations. 3

101.04 Definitions 4

101.04 Definitions. 7

102 - Bid, Award, and Execution of Contract 7

102 Bid, Award, and Execution of Contract 7

103 - Scope of Work 7

Deletions 7

104 - Control of Work 7

Deletions 7

104.06 Use of Roads by Contractor 8

105 - Control of Material 8

105.02 Material Sources. 8

105.02(a) Government-provided sources. 8

105.05 Use of Material Found in the Work. 8

106 - Acceptance of Work 8

106.07 Delete 9

107 - Legal Relations and Responsibility to the Public 9

107.05 Responsibility for Damage Claims. 9

107.06 Contractor’s Responsibility for Work. 9

107.08 Sanitation, Health, and Safety 9

107.09 Legal Relationship of the Parties. 9
107.10 Environmental Protection. 9
108 - Prosecution and Progress 10
108 Delete. 10
109 - Measurement and Payment 11
109 Deletions 11
109.02 Measurement Terms and Definitions. 11
151 - Mobilization 11
155 - Schedules for Construction Contracts 12
155 Delete. 12
249 - Composite Road Construction 12
301 - Untreated Aggregate Courses 16
301 Title Change. 16
301.05 Compacting 16
602 - Culverts and Drains 17
602.03 General. 17
625 - Turf Establishment 17
625.05 Watering. 17
625.07 Seeding. (a) Dry method. 17
625.07 Seeding. (b) Hydraulic method. 17
Table 625-1. Fertilizer Application Rate. 18
633 - Permanent Traffic Control 18
633.03 General. 18
718 - Traffic Signing and Marking Material 18
718.05 Aluminum Panels 18

Preface

Preface_wo_03_15_2004_m

Delete all but the first paragraph and add the following:

The Forest Service, US Department of Agriculture has adopted FP-03 for construction of National Forest System Roads.

101 - Terms, Format, and Definitions

101.00_nat_us_07_25_2005

101.01_nat_us_01_22_2009

101.01 Meaning of Terms

Delete all references to the TAR (Transportation Acquisition Regulations) in the specifications.

101.01_nat_us_01_22_2009

101.01 Meaning of Terms

Delete all references to the FAR (Federal Acquisition Regulations) in the specifications.

101.03_nat_us_06_16_2006

101.03 Abbreviations.

Add the following to (a) Acronyms:

AFPA	American Forest and Paper Association
MSHA	Mine Safety and Health Administration
NIST	National Institute of Standards and Technology
NESC	National Electrical Safety Code
WCLIB	West Coast Lumber Inspection Bureau

.

Add the following to (b) SI symbols:

mp	Milepost

ppm	Part Per Million

101.04 Definitions.

Delete the following definitions and substitute the following:

Bid Schedule--The Schedule of Items.

Bridge--No definition.

Contractor--The individual or legal entity contracting with the Government for performance of prescribed work. In a timber sale contract, the contractor is the "purchaser".

Culvert--No definition.

Right-of-Way--A general term denoting (1) the privilege to pass over land in some particular line (including easement, lease, permit, or license to occupy, use, or traverse public or private lands), or (2) Real property necessary for the project, including roadway, buffer areas, access, and drainage areas.

Add the following:

Adjustment in Contract Price--"Equitable adjustment," as used in the Federal Acquisition Regulations, or "construction cost adjustment," as used in the Timber Sale Contract, as applicable.

Change--"Change" means "change order" as used in the Federal Acquisition Regulations, or "design change" as used in the Timber Sale Contract.

Design Quantity--"Design quantity" is a Forest Service method of measurement from the FS-96 *Forest Service Specifications for the Construction of Roads and Bridges.* Under these FP specifications this term is replaced by the term "Contract Quantities".

Forest Service--The United States of America, acting through the Forest Service, U.S. Department of Agriculture.

Neat Line--A line defining the proposed or specified limits of an excavation or structure.

Pioneer Road--Temporary construction access built along the route of the project.

Purchaser--The individual, partnership, joint venture, or corporation contracting with the Government under the terms of a Timber Sale Contract and acting independently or through agents, employees, or subcontractors.

Protected Streamcourse--A drainage shown on the plans or timber sale area map that requires designated mitigation measures.

Road Order--An order affecting and controlling traffic on roads under Forest Service jurisdiction. Road Orders are issued by a designated Forest Officer under the authorities of 36 CFR, part 260.

Schedule of Items--A schedule in the contract that contains a listing and description of construction items, quantities, units of measure, unit price, and amount.

Utilization Standards--The minimum size and percent soundness of trees described in the specifications to determine merchantable timber.

Add Figure 101-1—Illustration of road structure terms:

Figure 101-1—Illustration of road structure terms.

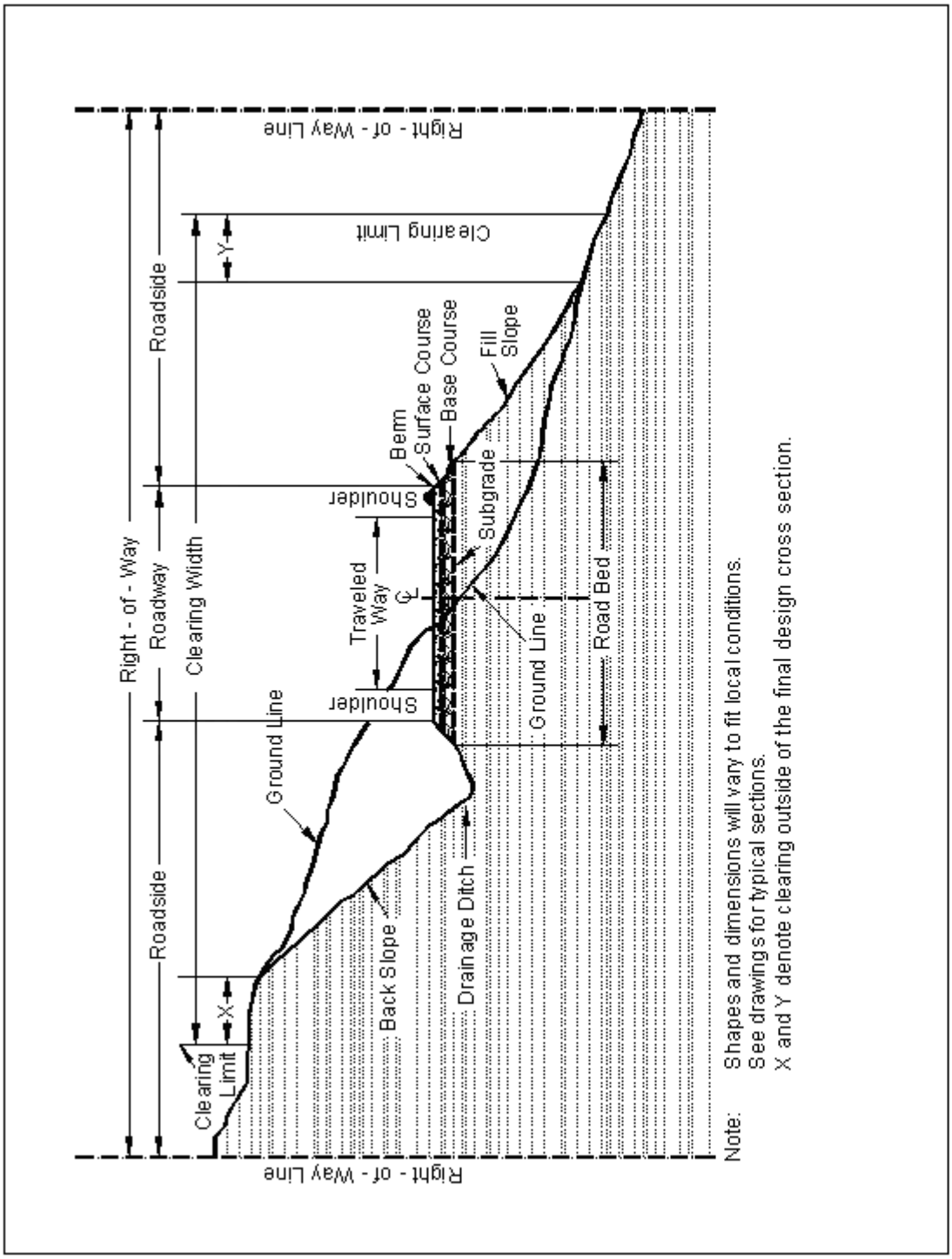

101.04 Definitions.

Delete the following definitions:

Contract Modification

Day

Notice to Proceed

Solicitation

102 - Bid, Award, and Execution of Contract

102.00_nat_us_02_16_2005

102 Bid, Award, and Execution of Contract

Delete Section 102 in its entirety.

103 - Scope of Work

103.00_nat_us_02_16_2005

Deletions

Delete all but subsection 103.01 Intent of Contract.

104 - Control of Work

104.00_nat_us_06_16_2006

Deletions

Delete Sections 104.01, 104.02, and 104.04.

104.06_nat_us_02_17_2005

Add the following subsection:

104.06 Use of Roads by Contractor

The Contractor is authorized to use roads under the jurisdiction of the Forest Service for all activities necessary to complete this contract, subject to the limitations and authorizations designated in the Road Order(s) or described in the contract, when such use will not damage the roads or national forest resources, and when traffic can be accommodated safely.

105 - Control of Material

105.02_nat_us_01_18_2007

105.02 Material Sources.

105.02(a) Government-provided sources.

Add the following:

Comply with the requirements of 30 CFR 56, subparts B and H. Use all suitable material for aggregate regardless of size unless otherwise designated. When required, re-establish vegetation in disturbed areas according to section 625.

105.05_nat_us_05_12_2004

105.05 Use of Material Found in the Work.

Delete 105.05 (a) and (b) and the last sentence of the second paragraph and substitute the following:

Materials produced or processed from Government lands in excess of the quantities required for performance of this contract are the property of the Government. The Government is not obligated to make reimbursement for the cost of producing these materials.

106 - Acceptance of Work

106.07_nat_us_05_11_2004

106.07 Delete

Delete subsection 106.07.

107 - Legal Relations and Responsibility to the Public

107.05_nat_us_05_11_2004

107.05 Responsibility for Damage Claims.

Delete the entire subsection.

107.06_nat_us_06_16_2006

107.06 Contractor's Responsibility for Work.

Delete the following from the first paragraph.

"except as provided in Subsection 106.07".

107.08_nat_us_03_29_2005

107.08 Sanitation, Health, and Safety

Delete the entire subsection.

107.09_nat_us_06_16_2006

107.09 Legal Relationship of the Parties.

Delete the entire subsection.

107.10_nat_us_06_16_2006

107.10 Environmental Protection.

Add the following:

Design and locate equipment repair shops, stationary refueling sites, or other facilities to minimize the potential and impacts of hazardous material spills on Government land.

Before beginning any work, submit a Hazardous Spill Plan. List actions to be taken in the event of a spill. Incorporate preventive measures to be taken, such as the location of mobile refueling facilities, storage and handling of hazardous materials, and similar information. Immediately

notify the CO of all hazardous material spills. Provide a written narrative report form no later than 24 hours after the initial report and include the following:

- Description of the item spilled (including identity, quantity, manifest number, and other identifying information).
- Whether amount spilled is EPA or state reportable, and if so whether it was reported, and to whom.
- Exact time and location of spill including a description of the area involved.
- Containment procedures.
- Summary of any communications the Contractor had with news media, Federal, state and local regulatory agencies and officials, or Forest Service officials.
- Description of clean-up procedures employed or to be employed at the site including final disposition and disposal location of spill residue.

When available provide copies of all spill related clean up and closure documentation and correspondence from regulatory agencies.

The Contractor is solely responsible for all spills or leaks that occur during the performance of this contract. Clean up spills or leaks to the satisfaction of the CO and in a manner that complies with Federal, state, and local laws and regulations.

108 - Prosecution and Progress

108.00_nat_us_02_16_2005

108 Delete.

Delete Section 108 in its entirety.

109 - Measurement and Payment

109.00_nat_us_02_17_2005

109 Deletions

Delete the following entire subsections:

109.06 Pricing of Adjustments.

109.07 Eliminated Work.

109.08 Progress Payments.

109.09 Final Payment.

109.02_nat_us_06_16_2006

109.02 Measurement Terms and Definitions.

(b) Contract quantity.

Add the following:

Contract quantities will be adjusted only when there are errors in the original design of 15% or more.

Change the following:

"(b) Cubic yard" to "(c) Cubic yard".

Add the following definition:

(p) Thousand Board Feet (Mbf). 1,000 board feet based on nominal widths, thickness, and extreme usable length of each piece of lumber or timber actually incorporated in the job. For glued laminated timber, 1,000 board feet based on actual width, thickness, and length of each piece actually incorporated in the job.

151 - Mobilization

151.03_nat_us_08_05_2005

151.03 Payment

Delete the entire subsection and add the following:

151.03 Payment

Mobilization is considered an indirect cost of this contract and will not be compensated as a separate work item.

155 - Schedules for Construction Contracts

155.00_nat_us_05_11_2004

155 Delete.

Delete Section 155 in its entirety.

249 - Composite Road Construction

249.00_0116_us_03_31_2005

Description

249.01 This work consists of clearing and grubbing, excavation and embankment, and removal of all construction slash including designated trees. During excavation and embankment, excavate and use borrow material; excavate drainage; shape the roadway, including approaches, turnarounds, ditches, and drainage dips; and place all excavated material, regardless of nature. Perform erosion control by furnishing and placing seed, fertilizer, mulch, and tackifer. Construct the roadway in conformance with the dimensions shown on the plans or designated by the CO.

Materials

249.02 Ensure that materials meet the requirements specified in the following section and subsection:

Seeding and Mulching	625
Stabilizing Emulsion Tackifers	713.02

Construction Requirements

249.03Clearing and Disposal. Protect construction stakes and construction control markers. Remove or treat all trees, snags, downed timber, brush, and stumps within the clearing limits according to the following specifications:

(a) Merchantable Timber. Treat according to Subsection 201.06

(b) Unmerchantable Timber. Treat according to Subsection 203.05 Method (i)

(c) Large Construction Slash. Treat construction slash larger than 3 inches in diameter and longer than 3 feet by one or more of the following methods, as shown on the plans:

(1) Method A. Incorporate construction slash in the embankment.

(2) Method B. Windrow construction slash inside the clearing limits. When slash is windrowed, place it approximately parallel to the roadway outside the toe of the fill slope.

(3) Method C. Scatter construction slash outside the roadway without damaging trees. Limb all logs. Place logs and stumps away from trees, positioned so they will remain in place and are not on top of one another.

(4) Method D. Construct piles that are free of soil, with smaller slash well mixed with larger slash. Buck unmerchantable logs into lengths less than 18 feet prior to placement in piles.

(5) Method E. Sidecast construction slash into the area below the roadway. Slash my be sidecast beyond the lower clearing limit not to exceed 10 feet.

(6) Method F. Bury construction slash within the roadway limits. Construct mats in layers and cover the mats with at least 18 inches of rock and soil.

(7) Method G. Construct piles of construction slash in the areas designated on the ground. Construct the piles so that burning does not damage standing trees. Burn the piles until all the material remaining in the pile is charred or ash.

(8) Method H. Bury the construction slash outside the roadway the locations designated on the ground. Construct mats in layers, and cover the mats with at least 18 inches of rock and soil. Slope the final surface to drain.

(9) Method J. Construct a debris mat of construction slash under the road subgrade. Use tree limbs, tops cull logs, split stumps, wood chunks, and other debris to form a mat. Place stumps upside down and blended into the mat.

Small Construction Slash. Construction slash less than 3 inches in diameter and less than 3 feet long may be incorporated into embankments so long as the material is distributed so that it does not result in concentrations or matting.

Immediately remove slash deposited in stream courses.

Fell all dead trees outside the clearing limits that lean toward the road and are sufficiently tall to reach the roadbed. Fell hazard or unstable live trees designated on the ground outside the clearing limits before felling timber in the immediate clearing vicinity.

Leave stump heights less than 1 foot or one-third of the stump diameter whichever is greater, measured on the side adjacent to the highest ground. Leave felled trees outside the clearing limits in place.

249.04 Pioneering. Do not undercut the final back slope during pioneer operations. Deposit material inside the roadway limits. Do not restrict drainage.

249.05 Grubbing. Grub within the specified limits. Stumps outside the grubbing limits remain if cut no higher than 1 foot or one-third of the stump diameter, whichever is greater, above the original ground, measured on the uphill side, unless otherwise designated. Grub stumps that will protrude through the subgrade or have less than 6 inches of cover.

249.06 Excavation and Embankment. Construct the roadway to conform to the typical sections shown on the plans. Protect backslopes from being undercut. Embankment may be placed by side casting and end dumping.

Locate and use borrow material, and remove and treat unsuitable or excess material, as designated.

Place rocks that are too large to be incorporated in the embankment outside the traveled way on the downhill side such that they will not roll, obstruct drainage, or hinder roadbed use and maintenance.

Leave slopes that are to be seeded in a roughened condition.

Shape and finish the roadbed to the condition ordinarily accomplished by a crawler tractor with dozer blade to provide drainage of surface water. Do not permit individual rocks to protrude more than 4 inches above the subgrade of the roadbed. A motor grader finish is not required.

Observe a width tolerance of (+) 18 inches f or the traveled way.

249.07 Erosion Control. Perform erosion control measures, including seeding. Use methods and applications rates, and types of seed, fertilizer, mulch, and tackifer, as specified in Section 625. Apply materials uniformly to the areas to be treated..

Measurement

249.08 Measure the Section 249 items listed in the bid schedule according to Subsection 109.02.

Payment

249.09 The accepted quantities will be paid at the contract price per unit of measurement for the Section 249 pay items listed in the bid schedule. Payment will be full compensation for the work prescribed in this Section. See Subsection 109.05.

301 - Untreated Aggregate Courses

301.00_nat_us_03_03_2005

301 Title Change.

Change the title to: **Section 301 Aggregate Courses**

301.05_nat_us_05_17_2005

301.05 Compacting

Delete and replace with the following:

Compact each layer full width. Roll from the sides to the center, parallel to the centerline of the road. Along curbs, headers, walls, and all places not accessible to the roller, compact the material with approved tampers or compactors.

Compact the aggregate using one of the following methods as specified:

Compaction A. Operating spreading and hauling equipment over the full width of the travelway.

Compaction B. Operate rollers and compact as specified in Subsection 204.11(a)(1).

Compaction C. Moisten or dry the aggregate to a uniform moisture content between 5 and 7 percent based on total dry weight of the mixture. Operate rollers and compact as specified in Subsection 204.11(a)(1).

Compaction D. Compact to a density of at least 95 percent of the maximum density, as determined by AASHTO T 99, method C or D.

Compaction E. Compact to a density of at least 96 percent of the maximum density, as determined by the Modified Marshall Hammer Compaction Method (available upon request from USDA Forest Service, Regional Materials Engineering Center, P.O. Box 7669, Missoula, MT 59807).

Compaction F. Compact to a density of at least 95 per-cent of the maximum density, as determined by AASHTO T 180, method C or D.

Compaction G. Compact to a density of at least 100 percent of the maximum density as determined by the Modified Marshall Hammer Compaction Method (available upon request from USDA Forest Service, Regional Materials Engineering Center, P.O. Box 7669, Missoula, MT 59807).

For all compaction methods, blade the surface of each layer during the compaction operations to remove irregularities and produce a smooth, even surface. When a density requirement is

specified, determine the in place density and moisture content according to AASHTO T 310 or other approved test procedures.

301.10_nat_us_03_03_2005

301.10 Payment

Delete the following:

adjusted according to Subsection 106.05

602 - Culverts and Drains

602.03_nat_us_09_06_2005

602.03 General.

Add the following:

Ensure that the final installed alignment of all pipe allows no reverse grades, and does not permit horizontal and vertical alignments to vary from a straight line drawn from center of inlet to center of outlet by more than 2 percent of pipe center length or 1.0 feet, whichever is less.

625 - Turf Establishment

625.05_nat_us_03_30_2005

625.05 Watering.

Delete the entire subsection

625.07_nat_us_02_25_2005

625.07 Seeding. (a) Dry method.

Remove the last sentence “Lightly compact the seedbed within 24 hours after seeding.”

625.07 Seeding. (b) Hydraulic method.

Add the following:

Apply fertilizer conforming to Subsection 713.03 at the rates shown in Table 625-1. Fertilize areas inaccessible to hydro-type equipment by hand.

Table 625-1. Fertilizer Application Rate. SEE DRAWINGS

Type	Quantity per Slurry Unit
: :	__lbs
: :	__lbs

Apply the seed mixture at the rate of _____ kilograms of live seed per _____ (hectare/slurry unit). Include a tracer material consisting of either wood fiber mulch or grass cellulose fiber mulch to provide visible evidence of uniform application. Add the tracer to the slurry at a rate of _____ (400 pound per acre or 100 pound per slurry unit). Seed areas inaccessible to hydro-type equipment by hand.

633 - Permanent Traffic Control

633.03_nat_us_03_03_2005

633.03 General.

Delete the subsection and add the following:

Furnish traffic control devices and guide signs according to the MUTCD, approved USDA-FS and state supplements, the current edition of USDA-FS EM-7100-15 Sign and Poster Guidelines for the Forest Service, and Standard Highway Signs published by FHWA. Submit the sign list for approval before ordering.

718 - Traffic Signing and Marking Material

718.05_nat_us_08_05_2009

718.05 Aluminum Panels

Delete the third paragraph and replace with the following:

Clean, degrease and properly prepare the panels according to methods recommended by the sheeting manufacturer. Conversion coatings will conform to ASTM B-921 or ASTM B-449.