UNITED STATES DEPARTMENT OF AGRICULTURE

FOREST SERVICE – REGION SIX

SIUSLAW NATIONAL FOREST

CENTRAL COAST RANGER DISTRICT

BENTON COUNTY

PLANS FOR PROPOSED

ROCK THIN STEWARDSHIP

ROADS

ROAD NO.	FROM/TO	LENGTH (MILES)	TYPE OF WORK
3405	COUNTY ROAD/M.P. 7.23	7.23	Reconstruction
3409	FS ROAD 3405/M.P. 2.38	2.38	Reconstruction

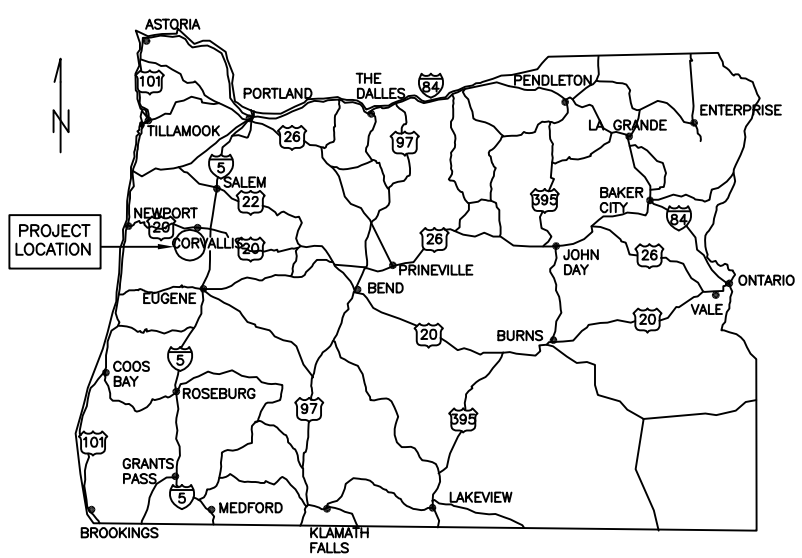

KEY MAP OF OREGON SHOWING LOCATION OF PROJECT

INDEX TO SHEETS

NO.	DESCRIPTION
1	TITLE SHEET
2	VICINITY MAP
3	ESTIMATE OF QUANTITIES
4	ROAD STRUCTURE DETAILS
5	DRAINAGE CONSTRUCTION DETAILS
6	DRAINAGE LISTING
7	ROAD 3405 M.P. 3.05 CULVERT REPLACEMENT DETAIL
8	ROADSIDE BRUSHING DETAILS
9–10	WORK DESCRIPTION

Designed by	
Designer	Date
Reviewed by:	
Reviewer	Date
Assistant Dev. Engineer	Date
Recommended by:	
Zone Engineer	Date
Approved by:	
Line Officer	Date
Forest Engineer	Date

ROCK THIN STEWARDSHIP

SHEET	OF
2	10

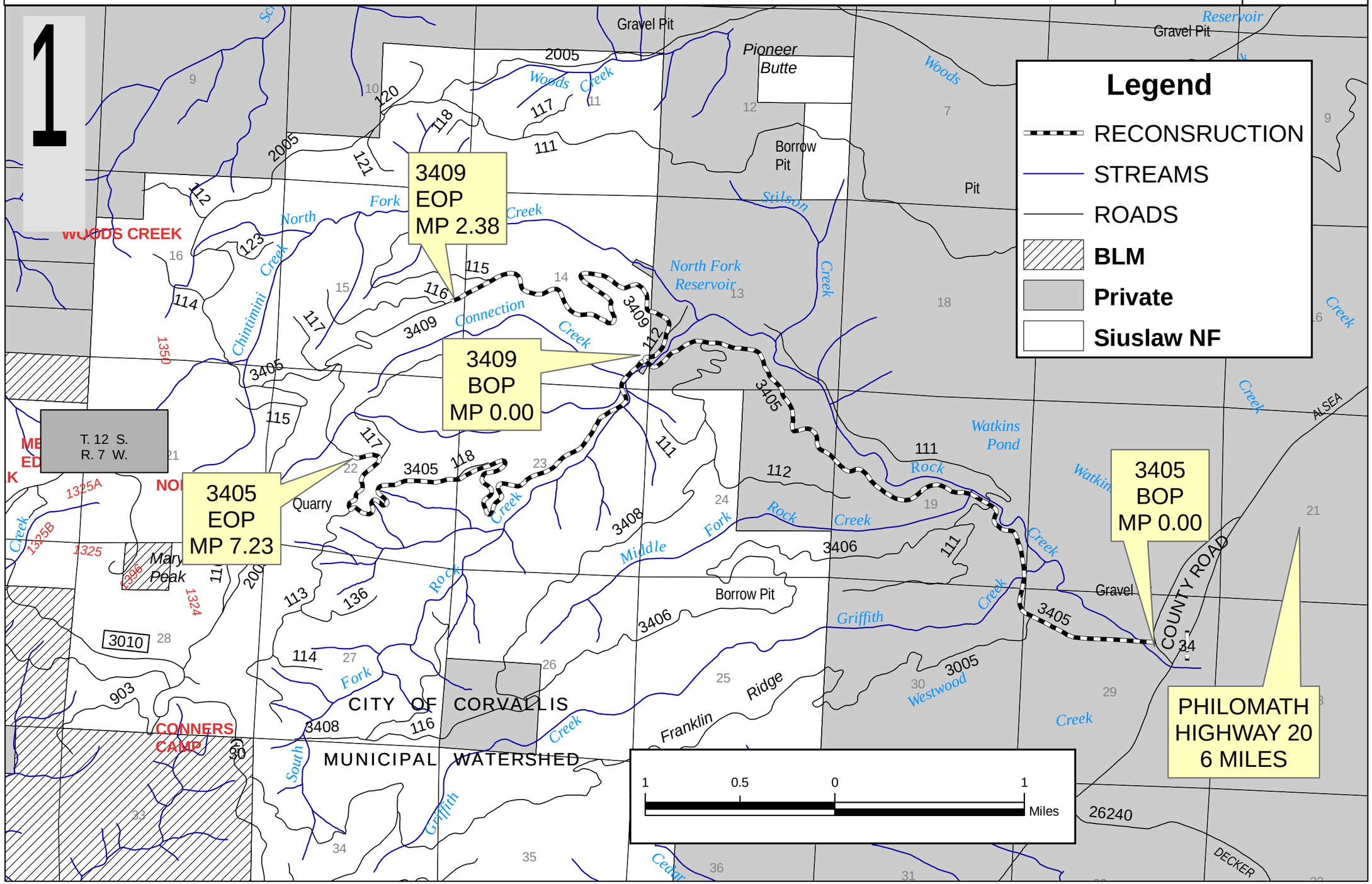

ESTIMATE OF QUANTITIES	ROCK THIN STEWARDSHIP	SHEET 3	OF 10

ROAD NUMBER			3405	3409	GENERAL NOTES
PROJECT LENGTH (MILES)			7.23	2.38	
ITEM NO.	DESCRIPTION	UNIT	QUANTITIES	QUANTITIES	* Denotes Contract Quantities
15101	Mobilization	Lump Sum	ALL		Includes fire protection, equipment cleaning and traffic control.
15204	Drainage structure survey and staking, method II, tolerance C	Each	1		M.P. 3.05/Must be completed and approved by C.O. prior to any excavation.
15757	Erosion Control & Pollution Prevention	Each	2		Include erosion control and dewatering for MP 1.33, and 3.05.
20103	Clearing and grubbing, disposal of tops & limbs (f(1)), logs (i), stumps (f(1))	Mile		2.38	Removal of trees from ditches and cut slopes.
20253	Removal of individual trees, miscellaneous: disposal of tops & limbs (f(1)) & logs (l)	Each	8	8	
20301	Removal, culverts	Each	1	2	Disposal method (a) remove from project.
20404	Unclassified borrow, compaction method B, finishing method n/a	Cubic Yard*	20		Site M.P. 3.05 / Source M.P. 6.49.
20419	Drainage Excavation, type ditch	Foot		50	
20419A	Drainage Excavation, type lead out ditch	Foot		35	M.P. 0.07 and 1.91.
20457	Roadway Excavation, compaction method B	Cubic Yard*	2655	600	Includes all culvert installations.
23051	Roadside brushing, disposal method 1	Mile	3.35	2.38	
25101	Placed riprap, class 6	Cubic Yard*	40	18	Commercial Source/In-Place Compacted Quantities.
30359	Roadway reconditioning, compaction E	Mile	7.23	2.38	Scarify only potholes and irregular surfaces to 6" maximum depth except where indicated on description of work. Includes all existing turnouts and curve widening, cleaning of bridge deck and structure. See sheet 4 of 9 for ditch and roadway dimensions. Grubbing and disposal of all vegetation and root masses within the road bed and in the ditch is required. Haul all material from ditch reestablishment and slough and slide removal to designated disposal areas.
32203C	Aggregate base, grading C, compaction method C	Cubic Yard*	366	39	Commercial Source/In-Place Compacted Quantities. All sites include 4" compacted depth of surfacing material.
32207A	Subbase, grading A, compaction method C	Cubic Yard*	100	21	Commercial Source/In-Place Compacted Quantities. All sites include 8" compacted depth of subbase material.
32252Q	Pit run, grading Q, compaction method C	Cubic Yard*		114	Commercial Source/In-Place Compacted Quantities.
32252M	Pit run, grading M, compaction method C	Cubic Yard*		73	Commercial Source/In-Place Compacted Quantities.
60278	24-inch corrugated polyethylene pipe, type S, method B	Foot	524	158	Materials only.
60278A	36-inch corrugated polyethylene pipe, type S, method B	Foot	68		Materials only.
60654	24-inch full circle polyethylene outlet pipe, type C	Foot	40		Includes all anchors, hardware, equipment and labor.
60708	Cleaning culverts in place	Each		4	Includes placement of government provided weed free straw at outlet end to filter sediment out.
60791	Repair culvert, attach existing outlet pipe	Each		1	Includes all anchors, hardware, equipment and labor.

REMARKS:

1) Disposal Areas : 6' Maximum height of material, 1V:2H slopes, shape to drain & reconstruct ditchline between road and disposal site. Disposal area locations will be flagged by the Contracting Officer prior to any material placement and are identified in Description of Work.

2) Payment will be made on actual work performed as described in FP-03 109.01 unless otherwise noted.

3) See timber sale provisions and specifications for daily and seasonal restrictions.

4) All utility locates, permits and water rights are the responsibility of the purchaser.

ROCK THIN STEWARDSHIP
ROAD STRUCTURE DETAILS

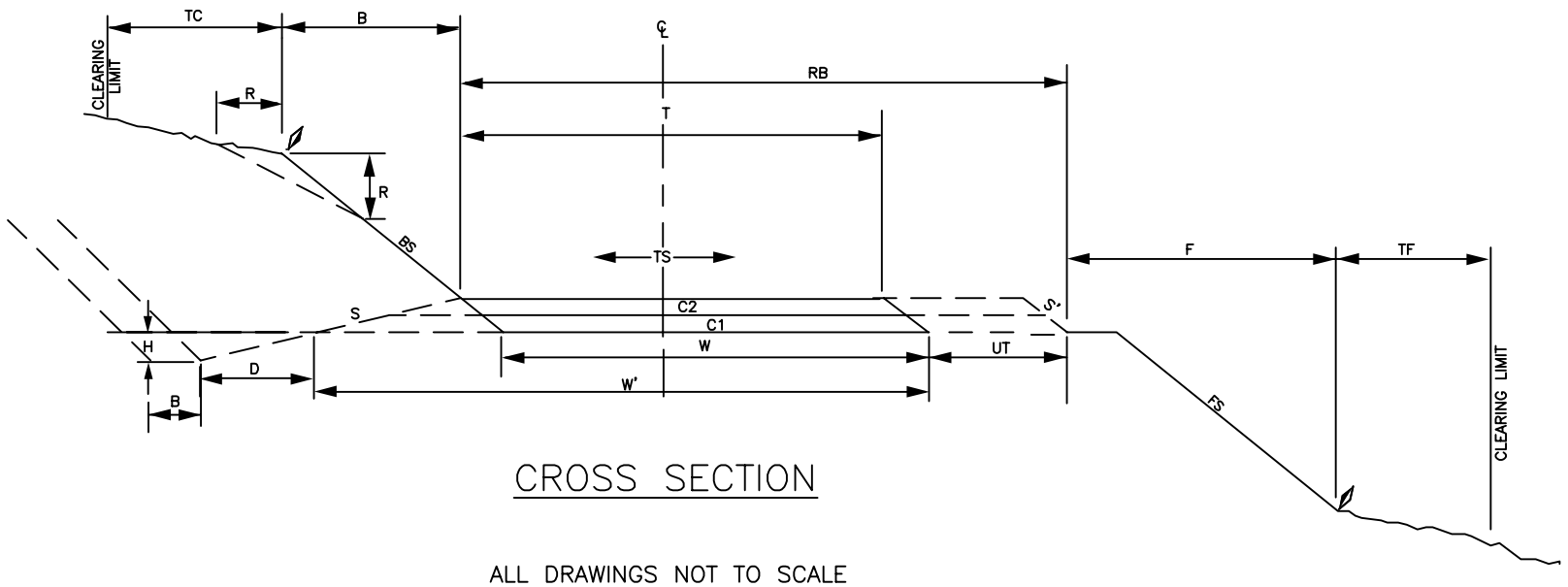

CROSS SECTION

ALL DRAWINGS NOT TO SCALE

TURNOUT AND TURNAROUND SYMBOLS

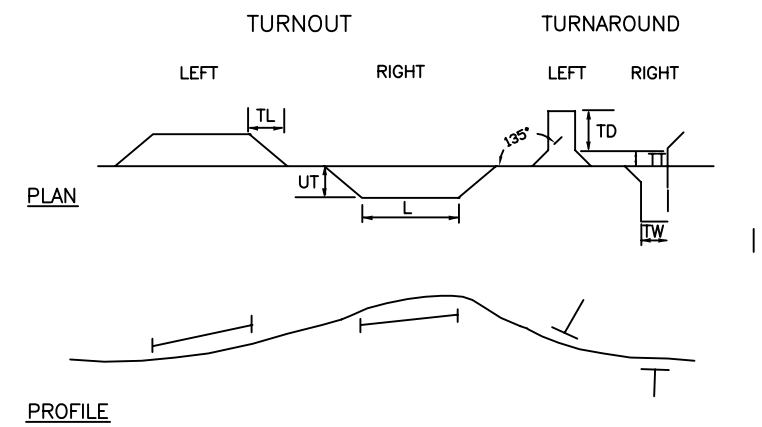

ROAD NUMBER	SEGMENT	STATION or MILEPOST	TO STATION or MILEPOST	TRAVELED WAY WIDTH	GRADING													PAVEMENT STRUCTURE							SHOULDER ROCK			
					CONSTRUCTION TOLERANCE	OUTSLOPE (O) INSLOPE (I) CROWN (C)	ROADBED WIDTH		DITCH DIMENSIONS			TURNOUT			TURN AROUND			GRADATION		COMPACTED DEPTH		SLOPE RATIO			DEPTH	SLOPE RATIO	WIDTH	GRADATION
				FT		%	FT		FT			FT	FT	FT	FT	FT	FT			IN								
				T		TS	W	W'	B	D	H	UT	TL	L	TT	TW	TD	C1	C2	C1	C2	S	S'	FS	IN		IN	
3405		0.00	7.23	14	C	C-3	15	EX	0	2	1	8	25	50	EX	EX	EX	A	C	8	4	1V:2H		1V:1.5H				
3409		0.00	2.38	12	C	C-3	13	EX	0	2	1	8	25	50	EX	EX	EX	A	C	8	4	1V:2H		1V:1.5H				

GENERAL NOTES

1. COMPACTED DEPTHS OF C1 & C2 PERTAIN TO SURFACING ONLY WHERE WORK IS SPECIFIED IN WORK DESCRIPTION. SEE DETAIL SHEETS FOR DEPTHS OF OTHER ROCK REQUIRED.
2. SURFACE CURVE WIDENING, TURNOUTS AND TURNAROUNDS TO THE SAME DEPTH AS THE ROADBED UNLESS OTHERWISE SHOWN ON THE PLANS.
3. EX = MATCH EXISTING DIMENSIONS.
4. MAINTAIN EXISTING SUPER ELEVATION, CROWN AND SLOPE OF ROAD. CREATE SMOOTH TRANSITIONS TO EXISTING ROAD SURFACE AND PRISM.
5. DO NOT UNDERCUT BACKSLOPE WHEN CLEANING AND/OR RECONSTRUCTING DITCH LINES.
6. REMOVE ALL BERMS, EXISTING OR CREATED, TO ALLOW DRAINAGE OF WATER FROM TRAVELED WAY, UNLESS OTHERWISE DESIGNATED TO REMAIN.

ROCK THIN STEWARDSHIP
DRAINAGE CONSTRUCTION DETAILS

CULVERT INSTALLATION TYPES

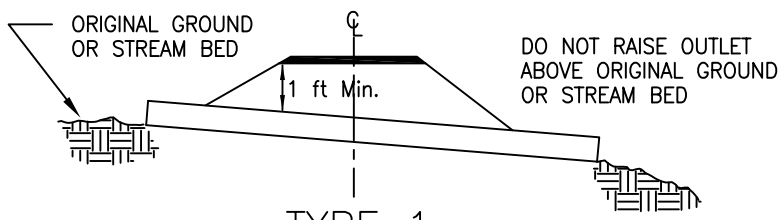

TYPE 1

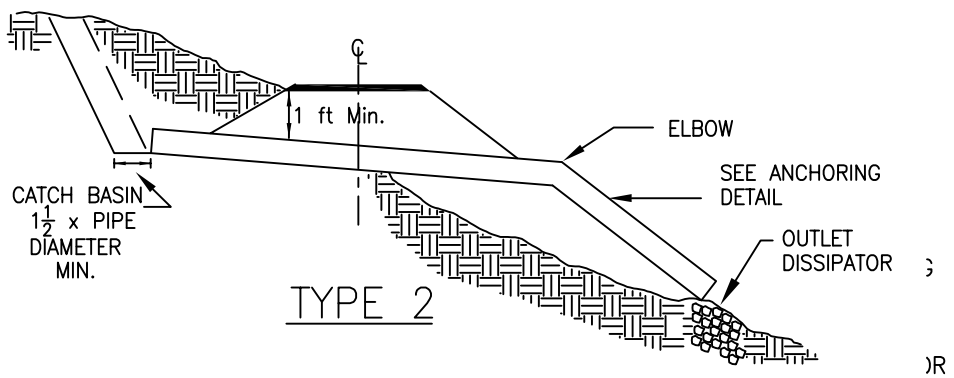

TYPE 2

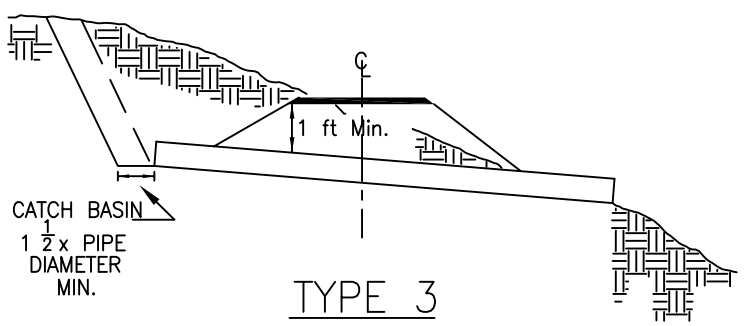

TYPE 3

ALL FILLS SHALL BE CONSTRUCTED WITH A MINIMUM SLOPE OF 1V:1.5H.

OUTLET DITCH

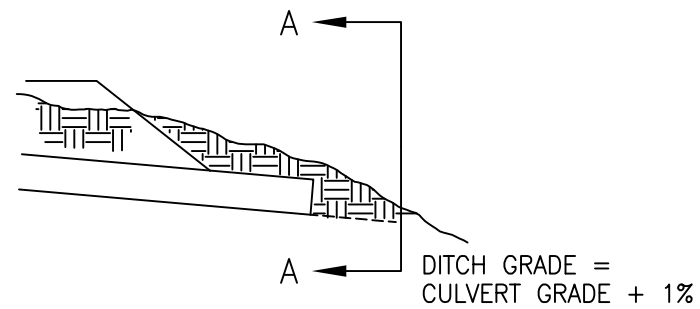

SECTION A–A

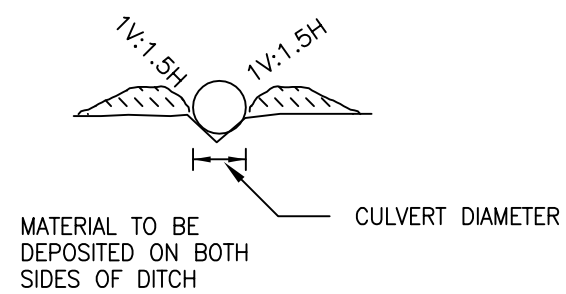

CULVERT INSTALLATION DETAIL

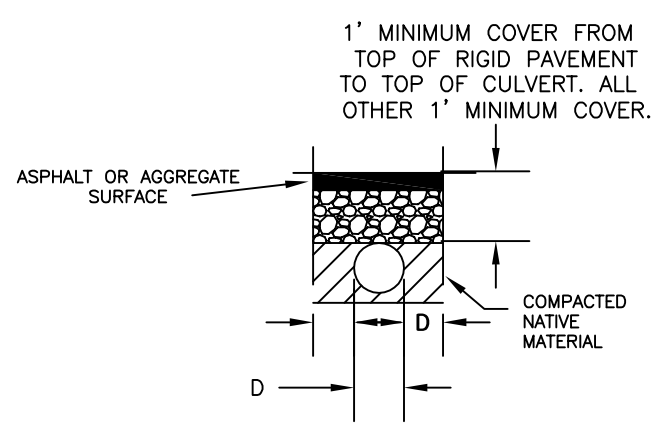

OUTLET DISSIPATOR DETAIL

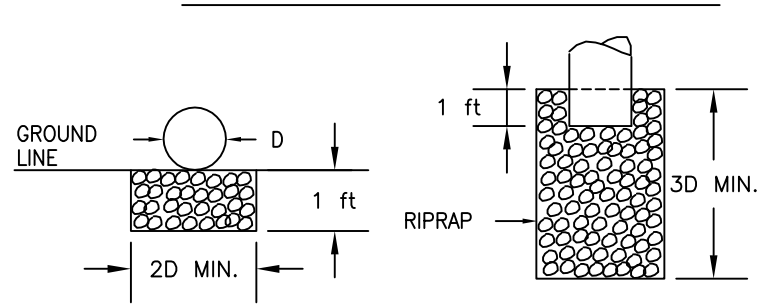

APRON SURFACE MUST CONFORM TO SHAPE OF EXISTING GROUND AND BE LEFT ROUGH TO REDUCE WATER VELOCITY. SEE DRAINAGE LISTING FOR ACTUAL QUANTITIES.

FLEX ELBOW

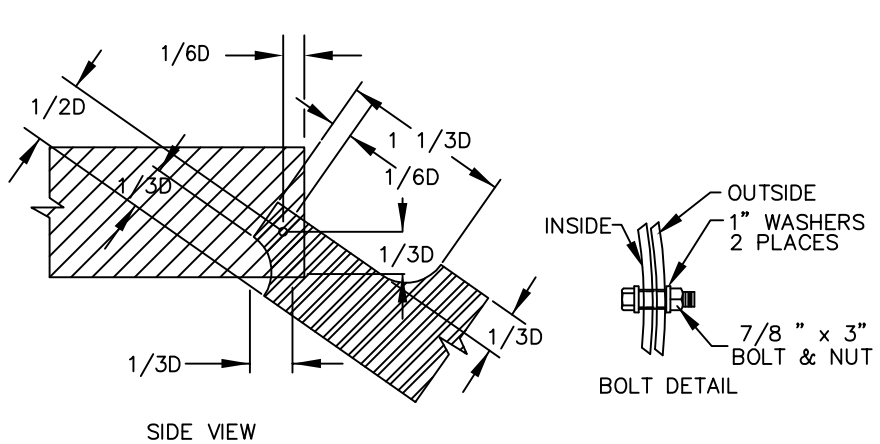

ANCHOR DETAILS

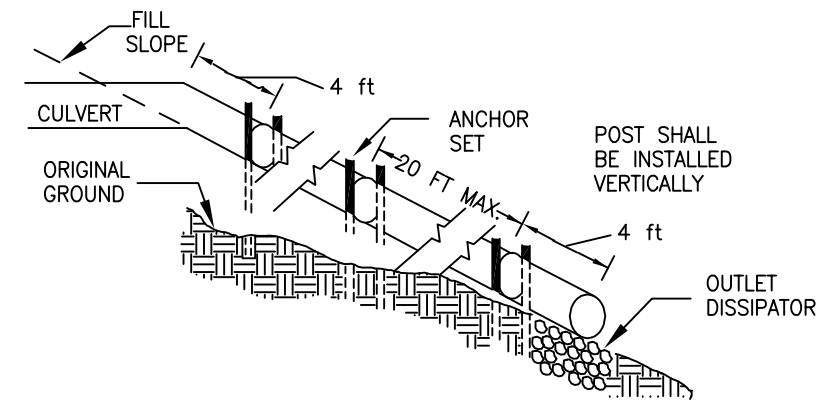

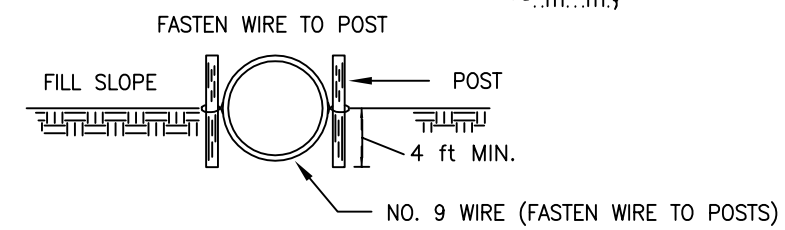

NOTE:
3 FT DIAMETER AND LARGER DOWNPIPE SHALL BE HALF BURIED.
ANCHOR SETS SHALL CONSIST OF TWO 6 FT STEEL FENCE POSTS (AASHTO M 281) AND NO. 9 GALVANIZED WIRE. 3 STRANDS OF WIRE SHALL BE TWISTED TOGETHER AND ENCOMPASS THE ENTIRE CIRCUMFERENCE OF THE PIPE.

DITCH DAM PLAN VIEW

TYPE 2 & 3 CULVERT INSTALLATION

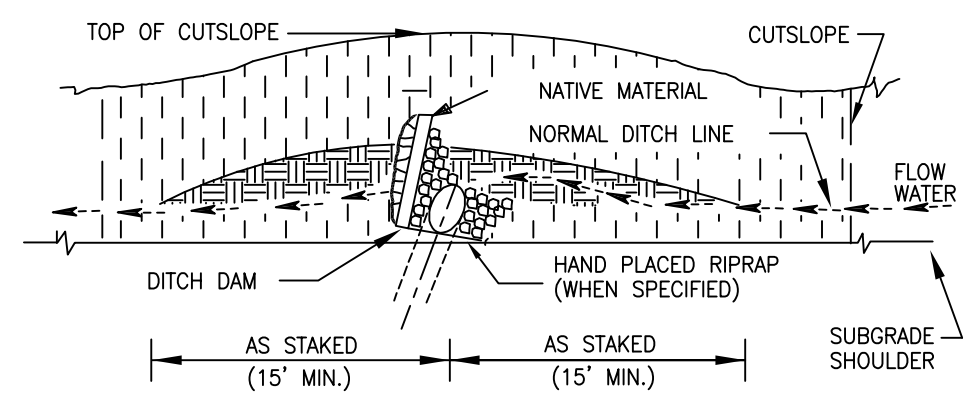

SKEW DIAGRAM

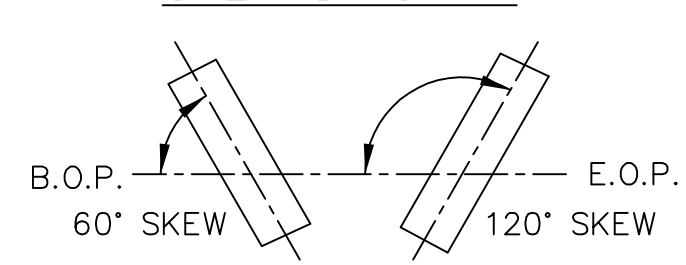

B.O.P. = BEGINNING OF PROJECT
E.O.P. = END OF PROJECT

ROCK THIN STEWARDSHIP
DRAINAGE LISTING

Sheet	Total
6	10

STA or MP	Designed: Plastic Pipe Diameter (in)	Plastic Pipe Length (ft)	Plastic Spillway Diameter (in)	Plastic Spillway Length (ft)	Plastic Spillway Full Circle	Plastic Spillway Half Round	Corrugated Metal Pipe Diameter (in)	Corrugated Metal Pipe Length (ft)	Corrugated Metal Full Circle Outlet Diameter (in)	Corrugated Metal Full Circle Outlet Length (ft)	Corrugated Metal Full Circle Outlet Full Circle	Corrugated Metal Full Circle Outlet Half Round	Installation Details: Grade (%)	Skew (deg)	Anchor Assembly	Type	Corrugated Metal Outlet Connection Flex	Corrugated Metal Outlet Connection Elbow	Riprap- CY: Hand Placed Inlet CY	Hand Placed Outlet CY	Machine Placed Inlet CY	Machine Placed Outlet CY	Dumped Inlet CY	Dumped Outlet CY	Remarks
																									CMP = Corrugated Metal Pipe CPP = Corrugated Plastic Pipe Some culvert installations may require excavation below existing grade line. Existing concrete culverts may be incorporated into backfill material. Reduce concrete material to a particle size of 6 inches or less.
Rd 3405																									
1.33	24	40	24	20									5%	90		2						3			Dewater and remove existing culvert. Install new CPP at new grade. 200 CY excavation.
1.34	24	68											60%	90		3						3			Remove existing culvert. Install new CPP. 200 CY excavation.
2.12	24	72											6%	90		3						3			Remove existing culvert. Install new CPP at new grade. 200 CY excavation.
2.27	24	48											5%	100		3						3			Remove trees at outlet, remove existing culvert. Install new CPP at new grade. 200 CY excavation.
2.82	24	52											20%	90		3						3			Remove existing culvert. Install new CPP. 200 CY excavation.
3.05	36	68											21%	90		3						10			Dewater. Remove existing culvert. Install new CPP dropping outlet to scour elevation. Place riprap blanket 2'D X 12'W X 10'L . 655 CY excavation.
3.85	24	50											20%	90		3						3			Remove existing culvert. Install new CPP. 200 CY excavation.
4.50	24	50											40%	90		3						3			Remove existing culvert. Install new CPP. 200 CY excavation.
4.80	24	54											27%	90		3						3			Remove existing culvert. Install new CPP. 200 CY excavation.
6.63	24	44											21%	90		3						3			Remove existing culvert. Install new CPP. 200 CY excavation.
6.94	24	46	24	20									55%	90		2						3			Remove existing culvert. Install new CPP. 200 CY excavation.
Totals	24	524		40																		40			
	36	68																							
Rd 3409																									
0.60	24	64											14%	90		3					3	5			New installation. 200 CY excavation.
0.73	24	58											25%	115		3						5			Remove existing culvert. Install new CPP. 200 CY excavation.
0.84	24	36											5%	110		3						5			Drop outlet to existing ground. 200 CY excavation.
Total		158																			3	15			

ROCK THIN STEWARSHIP

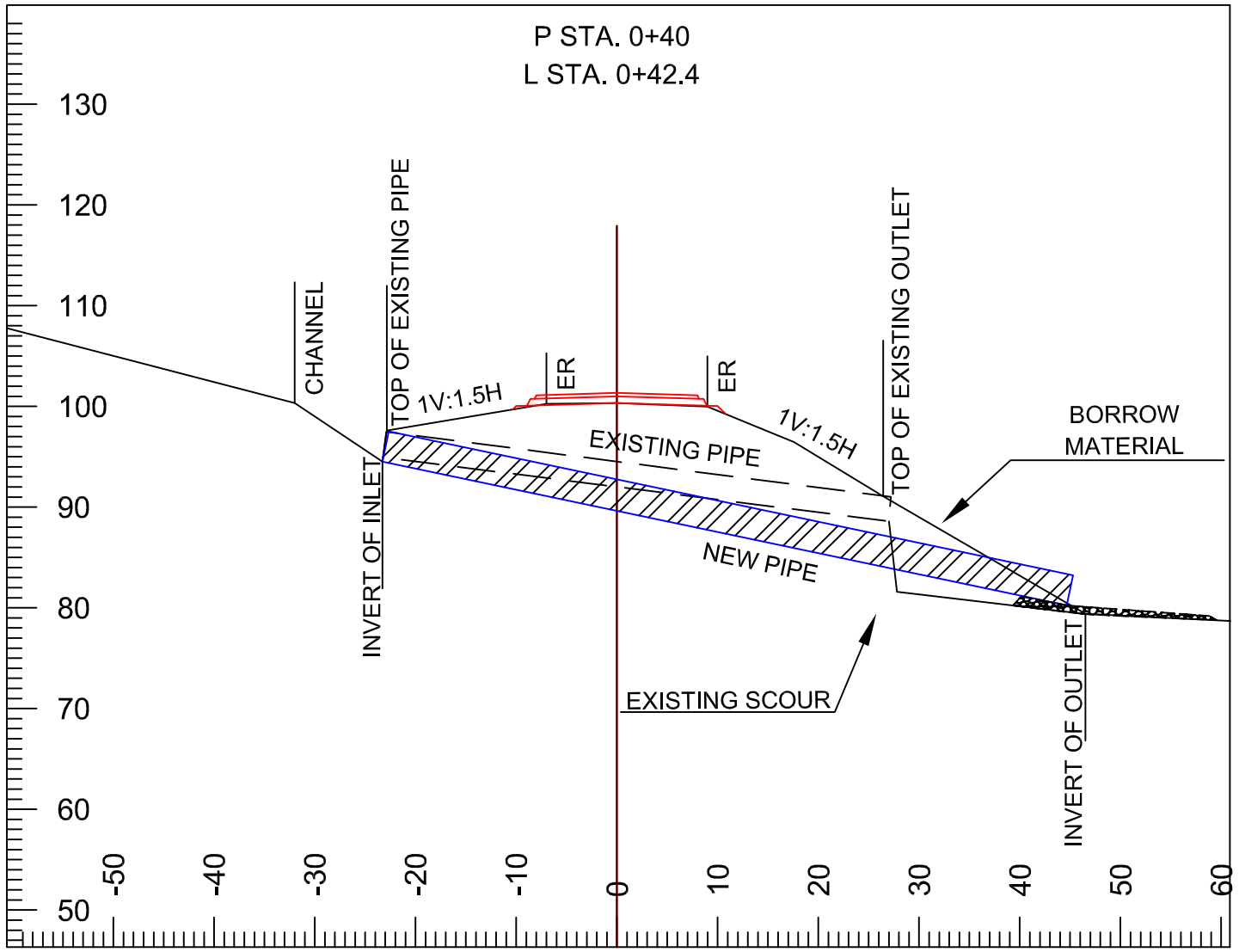

ROAD 3405 M.P. 3.05

CULVERT REPLACEMENT DETAIL

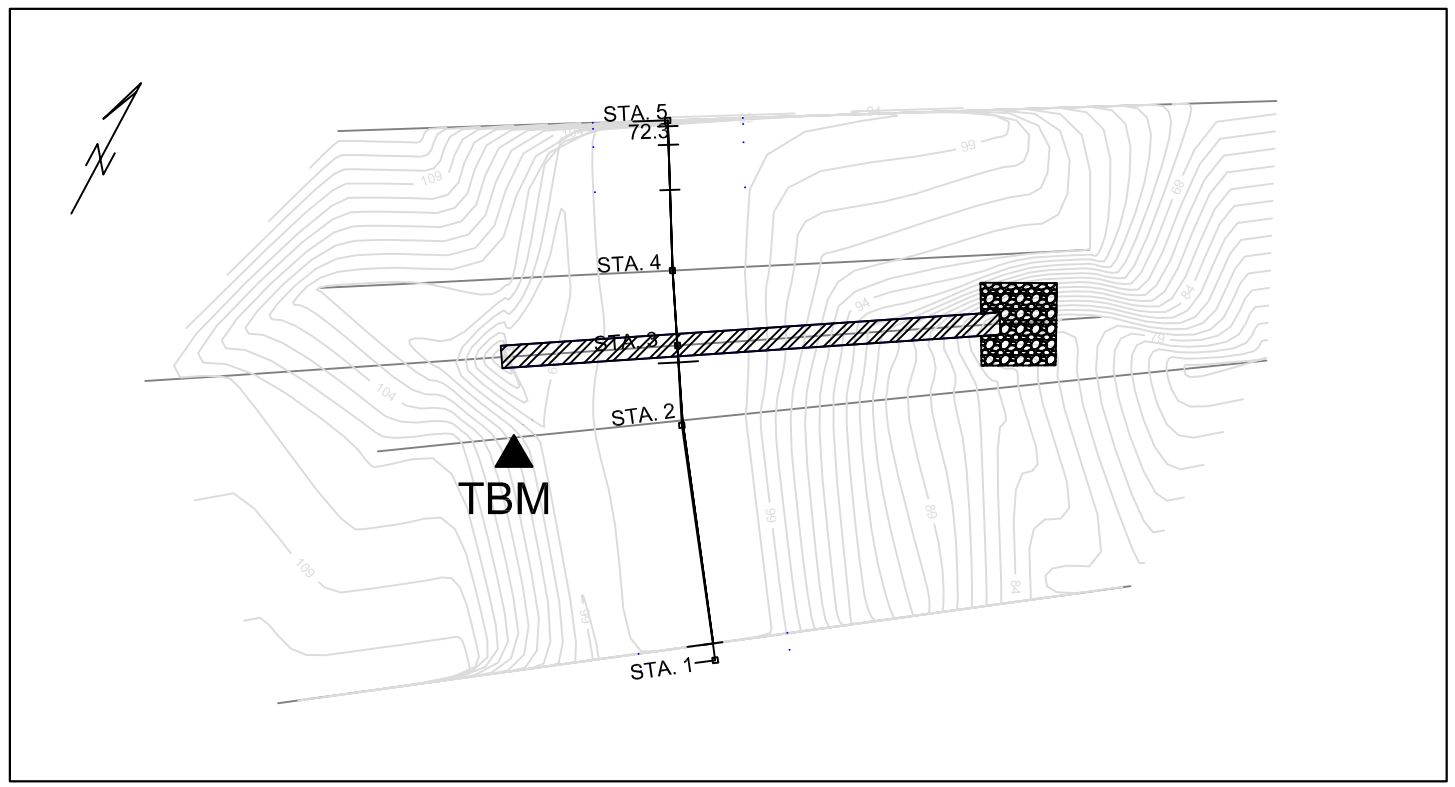

NOTES:

1) INLET INVERT ELEVATION 94.61'

2) TEMPORARY BENCH MARK (TBM) ELEVATION 100.0'

3) LOWER THE OUTLET INVERT TO BOTTOM OF SCOUR HOLE.

4) PLACE RIPRAP BLANKET 2'D X 10'L X 12'W.

ROCK THIN STEWARDSHIP
ROADSIDE BRUSHING DETAILS

ROADS 3405 & 3409

TYPICAL SECTION

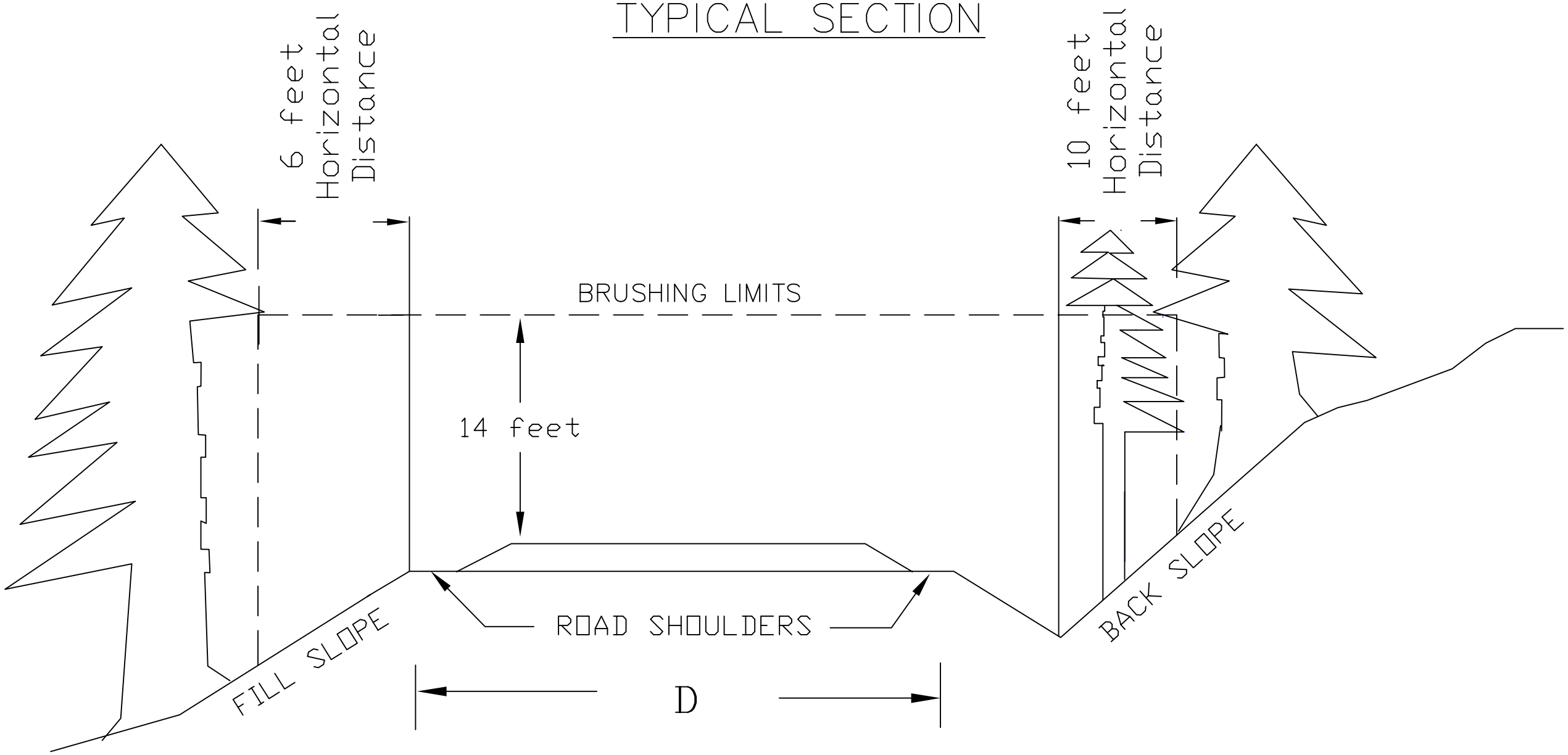

Grub stumps within "D" above or as noted on the work descriptions and haul to designated disposal areas.

Mechanical brushing may require manual limbing and manual scattering of machine cut material beyond the clearing limits.

ROCK THIN STEWARDSHIP
WORK DESCRIPTION

ROAD 3405

M.P. 0.00 BOP (Beginning Of Project): Junction with County Road.
Begin Roadway Reconditioning (Pay Item 30359).

M.P. 0.02 RP (Reference Point): Gate.

M.P. 0.08 Clean bridge deck and structure (Pay Item 30359).

M.P. 0.70 RP : Franklin Ridge Road Y- junction left .

M.P. 0.79 RP : Junction left to residence.

M.P. 1.33 Incorporate existing concrete pipe into the fill and install 24" pipe (Pay Items 15757, 20457, 25101, 32203C, 32207A, 60278 and 60654).

M.P. 1.34 Incorporate existing concrete pipe into the fill and install 24" pipe (Pay Items 20457, 25101, 32203C, 32207A and 60278).

M.P. 2.12 Incorporate existing concrete pipe into the fill and install 24" pipe (Pay Items 20457, 25101, 32203C, 32207A and 60278).

M.P. 2.27 Incorporate existing concrete pipe into the fill and remove trees at outlet. Install 24" pipe (Pay Items 20253, 20457, 25101, 32203C, 32207A and 60278).

M.P. 2.82 Incorporate existing concrete pipe into the fill and install 24" pipe (Pay Items 20457, 25101, 32203C, 32207A and 60278).

M.P. 3.05 Incorporate existing concrete pipe into the fill and remove trees at inlet/outlet. Install 36" pipe (Pay Items 15204, 15757, 20253, 20404, 20457, 25101, 32203C, 32207A and 60278A).

M.P. 3.53 RP: Junction left FS Road 3408.
Disposal site at FS Road 3408 M.P. 0.80 right.

M.P. 3.85 Incorporate existing concrete pipe into the fill and remove trees at outlet. Install 24" pipe (Pay Items 20253, 20457, 25101, 32203C, 32207A and 60278).

M.P. 3.87 Clean bridge deck and structure (Pay Item 30359).

M.P. 3.88 RP: Junction right FS Road 3409.
Begin Roadside brushing (Pay Item 23051).

M.P. 4.50 Incorporate existing concrete pipe into the fill and install 24" pipe (Pay Items 20457, 25101, 32203C, 32207A and 60278).

M.P. 4.80 Incorporate existing concrete pipe into the fill and remove tree. Install 24" pipe (Pay Items 20253, 20457, 25101, 32203C, 32207A and 60278).

M.P. 5.98 Disposal site left.

M.P. 6.49 RP: Borrow site right.

M.P. 6.63 Incorporate existing concrete pipe into the fill and install 24" pipe (Pay Items 20457, 25101, 32203C, 32207A and 60278).

M.P. 6.94 Remove existing CMP and install 24" pipe (Pay Items 20301, 20457, 25101, 32203C, 32207A , 60278 and 60654).

M.P. 7.23 End Roadside brushing (Pay Item 23051).
End Roadway Reconditioning (Pay Item 30359).
EOP(End Of Project).

M.P. 7.30 Disposal site right.

ROAD 3409

M.P. 0.00 BOP: Junction with FS Road 3505 M.P. 3.88.
Begin Roadside brushing (Pay Item 23051).
Begin Roadway Reconditioning (Pay Item 30359).
Begin Clearing and Grubbing (Pay Item 20103).

M.P. 0.01 Clean/flush existing CMP (Pay Item 60708).

M.P. 0.04 Remove slide material and reconstruct ditch left for 50' (Pay Items 20419 and 30359).

M.P. 0.07 Clean/flush existing CMP and construct 20' lead out ditch(Pay Items 20419A and 60708).

M.P. 0.60 Remove trees at outlet end. Install 24" pipe (Pay Items 20253, 20457, 25101, 32203C, 32207A and 60278).

M.P. 0.61 Blade, shape and compact entire roadbed for 200' length. Place 8" compacted depth grading M pit run and cap with 4" compacted depth Grading C base aggregate (Pay Items 30359, 32203C and 32252M).

M.P. 0.73 Remove existing CMP and remove trees at inlet/outlet. Install 24" pipe (Pay Items 20253, 20301, 20457, 25101, 32203C, 32207A and 60278).

M.P. 0.80 Place 8" depth for 30' full width of Grading Q (Pay Item 32252Q).

M.P. 0.84 Remove existing CMP and trees at inlet/outlet. Install 24" pipe (Pay Items 20253, 20301, 20457, 25101, 32203C, 32207A and 60278).

M.P. 0.90 Place 8" depth for 30' full width of Grading Q (Pay Item 32252Q).

M.P. 1.08 RP: Settlement in roadway.
Remove slough and log in ditch line. Blade, shape and place 6" compacted depth Grading Q for 30' ahead and back (Pay Items 30359 and 32252Q).

M.P. 1.24 Place 8" depth for 30' full width of Grading Q (Pay Item 32252Q).

M.P. 1.34 Place 8" depth for 30' full width of Grading Q (Pay Item 32252Q).

M.P. 1.48 Attach existing outlet pipe to existing pipe (Pay Item 60791).

M.P. 1.52 Place 8" depth for 30' full width of Grading Q (Pay Item 32252Q).

M.P. 1.70 Place 8" depth for 30' full width of Grading Q (Pay Item 32252Q).

M.P. 1.91 Clean/flush existing CMP. Construct 15' lead out ditch (Pay Items 20419A and 60708).

M.P. 2.14 Clean/flush existing CMP (Pay Item 60708).

M.P. 2.38 RP: Junction with FS Road 3409116.
End Roadside brushing (Pay Item 23051).
End Roadway Reconditioning(Pay Item 30359).
End Clearing and Grubbing (Pay Item 20103).
EOP.