Willamette National Forest
Timber Sale: **Fall Thin**

Prepared By: Velez
Date: **6/6/2012**
Edited by

Road No.	Road Name	Traffic Service Level	Maint. Level	Design Class	Approx. Mi./km	C/R *	Specified Road Cost	Required Completion Date
2032417	Falls Creek Rd	D	2	SL-15mph	3.20/5.12	R	$49,078.99	10/31/2013
2032428	No Name	D	2	SL-15mph	1.12/1.79	R	$8,408.17	10/31/2013
2032430	No Name	D	2	SL-15mph	0.29/0.46	R	$6,622.99	10/31/2013

C=Construction
R=Reconstruction

Summary of Road Construction/Reconstruction Costs

Specified Roads Cost	$64,110.15
Share Cost Roads	$0.00
Road Engineering Reconst. Deposit Cost	$12,390.00
Total Road Costs	$76,500.15
Contributed Funds	$0.00
Total	$76,500.15

Total Estimated Road Construction Cost

Public Works Cost (opted sales)	$76,574.79

Attachments

Schedule of Items	3 pages
Plans	14 sheets
Specification Lists	2 pages
FS Supplemental Specs	53 pages
Road Maintenance T-Specs	14 pages

SCHEDULE OF ITEMS

Fall Thin Timber Sale
Sweet Home Ranger District
Willamette National Forest
Linn County

Timber Sale Schedule of Items - NFSR #2032417, 3.20 miles of Reconstruction

ITEM NO.	DESCRIPTION	PAY UNIT	ESTIMATE QUANTITIES	UNIT PRICE	TOTALS
15101	Mobilization	Lump Sum	ALL	$ 5,293.50	$ 5,293.50
15713	Soil Erosion & Pollution Control	Lump Sum	ALL	$ 1,132.14	$ 1,132.14
20301	Removal of Culvert, Disposal Method A	Each	14	$ 90.19	$ 1,262.66
20701*	Earthwork Geotextile, Type IV(B)	Square Yard	191.0	$ 3.19	$ 609.29
25104*	Keyed Riprap, Class 4	Cubic Yard	50	$ 52.15	$ 2,607.50
32207*	Subbase, Grading B, Compaction Method B	Cubic Yard	140	$ 46.52	$ 6,512.80
60263A	24-inch Aluminized Steel, Type 2, Corrugated Steel Pipe, 0.109 inch Thickness, Method B	Foot	456	$ 67.42	$ 30,743.52
63501	Temporary Traffic Control	Lump Sum	ALL	$ 917.58	$ 917.58
Each pay item that includes " * " signifies a Contract Quantity Pay Item. Payment will be made on actual work performed as described in FP-03 109.01 unless otherwise noted.					
				TOTAL:	$ 49,078.99

SCHEDULE OF ITEMS

Fall Thin Timber Sale
Sweet Home Ranger District
Willamette National Forest
Linn County

Timber Sale Schedule of Items - NFSR #2032428, 1.12 miles of Reconstruction

ITEM NO.	DESCRIPTION	PAY UNIT	ESTIMATE QUANTITIES	UNIT PRICE	TOTALS
20301	Removal of Culvert, Disposal Method A	Each	3	$ 90.19	$ 270.57
32207*	Subbase, Grading B, Compaction Method B	Cubic Yard	30	$ 46.52	$ 1,395.60
60263A	24-inch Aluminized Steel, Type 2, Corrugated Steel Pipe, 0.109 inch Thickness, Method B	Foot	100	$ 67.42	$ 6,742.00

Each pay item that includes " * " signifies a Contract Quantity Pay Item.
Payment will be made on actual work performed as described in FP-03 109.01 unless otherwise noted.

TOTAL:	$ 8,408.17

SCHEDULE OF ITEMS

Fall Thin Timber Sale
Sweet Home Ranger District
Willamette National Forest
Linn County

Timber Sale Schedule of Items - NFSR #2032430, 0.29 miles of Reconstruction

ITEM NO.	DESCRIPTION	PAY UNIT	ESTIMATE QUANTITIES	UNIT PRICE	TOTALS
15755	Dewatering Structure	Lump Sum	ALL	$ 1,362.27	$ 1,362.27
20301	Removal of Culvert, Disposal Method A	Each	1	$ 90.19	$ 90.19
20701*	Earthwork Geotextile, Type IV(B)	Square Yard	42.0	$ 3.19	$ 133.98
25104*	Keyed Riprap, Class 4	Cubic Yard	21	$ 52.15	$ 1,095.15
32207*	Subbase, Grading B, Compaction Method B	Cubic Yard	15	$ 46.52	$ 697.80
60263B	36-inch Aluminized Steel, Type 2, Corrugated Steel Pipe, 0.109 inch Thickness, Method B	Foot	40	$ 81.09	$ 3,243.60

Each pay item that includes " * " signifies a Contract Quantity Pay Item.
Payment will be made on actual work performed as described in FP-03 109.01 unless otherwise noted.

TOTAL: $ 6,622.99

SPECIFIED ROADS TOTAL RECONSTRUCTION COST

Fall Thin Timber Sale
Sweet Home Ranger District
Willamette National Forest
Linn County

Timber Sale Estimated Reconstruction Costs		
DESCRIPTION	NFSR #	ESTIMATED COST
Reconstruction	2032417	$ 49,078.99
Reconstruction	2032428	$ 8,408.17
Reconstruction	2032430	$ 6,622.99
	SUB-TOTAL	$ 64,110.15
C5.213# Reconstruction Engineering Deposits	ALL	$ 12,390.00
	TOTAL	$ 76,500.15

X _____
Zone Engineer's Approval

ENGINEERS ESTIMATE

Fall Thin Timber Sale
Sweet Home Ranger District
Willamette National Forest
Linn County

Public Works Engineers Estimate - NFSR #2032417, 3.20 miles of Reconstruction

ITEM NO.	DESCRIPTION	PAY UNIT	ESTIMATE QUANTITIES	UNIT PRICE	TOTALS
15101	Mobilization	Lump Sum	ALL	$ 6,698.77	$ 6,698.77
15713	Soil Erosion & Pollution Control	Lump Sum	ALL	$ 1,267.79	$ 1,267.79
20301	Removal of Culvert, Disposal Method A	Each	14	$ 107.37	$ 1,503.18
20701*	Earthwork Geotextile, Type IV(B)	Square Yard	191.0	$ 4.15	$ 792.65
25104*	Keyed Riprap, Class 4	Cubic Yard	50	$ 59.46	$ 2,973.00
32207*	Subbase, Grading B, Compaction Method B	Cubic Yard	140	$ 55.38	$ 7,753.20
60263A	24-inch Aluminized Steel, Type 2, Corrugated Steel Pipe, 0.109 inch Thickness, Method B	Foot	456	$ 80.26	$ 36,598.56
63501	Temporary Traffic Control	Lump Sum	ALL	$ 1,230.00	$ 1,230.00
Each pay item that includes " * " signifies a Contract Quantity Pay Item. Payment will be made on actual work performed as described in FP-03 109.01 unless otherwise noted.					
				TOTAL:	$ 58,817.15

ENGINEERS ESTIMATE

Fall Thin Timber Sale
Sweet Home Ranger District
Willamette National Forest
Linn County

Public Works Engineers Estimate - NFSR #2032428, 1.12 miles of Reconstruction

ITEM NO.	DESCRIPTION	PAY UNIT	ESTIMATE QUANTITIES	UNIT PRICE	TOTALS
20301	Removal of Culvert, Disposal Method A	Each	3	$ 107.37	$ 322.11
32207*	Subbase, Grading B, Compaction Method B	Cubic Yard	30	$ 55.38	$ 1,661.40
60263A	24-inch Aluminized Steel, Type 2, Corrugated Steel Pipe, 0.109 inch Thickness, Method B	Foot	100	$ 80.26	$ 8,026.00

Each pay item that includes " * " signifies a Contract Quantity Pay Item.
Payment will be made on actual work performed as described in FP-03 109.01 unless otherwise noted.

TOTAL:	$ 10,009.51

ENGINEERS ESTIMATE

Fall Thin Timber Sale
Sweet Home Ranger District
Willamette National Forest
Linn County

Public Works Engineers Estimate - NFSR #2032430, 0.29 miles of Reconstruction

ITEM NO.	DESCRIPTION	PAY UNIT	ESTIMATE QUANTITIES	UNIT PRICE	TOTALS
15755	Dewatering Structure	Lump Sum	ALL	$ 1,525.50	$ 1,525.50
20301	Removal of Culvert, Disposal Method A	Each	1	$ 107.37	$ 107.37
20701*	Earthwork Geotextile, Type IV(B)	Square Yard	42.0	$ 4.15	$ 174.30
25104*	Keyed Riprap, Class 4	Cubic Yard	21	$ 59.46	$ 1,248.66
32207*	Subbase, Grading B, Compaction Method B	Cubic Yard	15	$ 55.38	$ 830.70
60263B	36-inch Aluminized Steel, Type 2, Corrugated Steel Pipe, 0.109 inch Thickness, Method B	Foot	40	$ 96.54	$ 3,861.60

Each pay item that includes " * " signifies a Contract Quantity Pay Item.
Payment will be made on actual work performed as described in FP-03 109.01 unless otherwise noted.

TOTAL: $ 7,748.13

SPECIFIED ROADS TOTAL RECONSTRUCTION COST

Fall Thin Timber Sale
Sweet Home Ranger District
Willamette National Forest
Linn County

Public Works Estimated Reconstruction Costs		
DESCRIPTION	NFSR #	ESTIMATED COST
Reconstruction	2032417	$ 58,817.15
Reconstruction	2032428	$ 10,009.51
Reconstruction	2032430	$ 7,748.13
	SUB-TOTAL	$ 76,574.79
C5.213# Reconstruction Engineering Deposits	ALL	$ 12,390.00
	TOTAL	$ 88,964.79

X _____
Zone Engineer's Approval

All specifications not included in the specification listing, but included by reference, are applicable. "✓" denotes applicable standard and/or supplemental specifications. The supplementals shown on the specification list are physically attached.

		NFSR #2032417	NFSR #2032428	NFSR #2032430
Forest Service Supplement Specification	***Revised***			
Preface	3/15/2004	✓	✓	✓
101 - Terms, Format, and Definitions	***FP-03***	✓	✓	✓
101.01 Meaning of Terms	***1/22/2009***	✓	✓	✓
101.03 Abbreviations.	6/16/2006	✓	✓	✓
101.04 Definitions.	3/29/2007	✓	✓	✓
101.04 Definitions.	11/06/2007	✓	✓	✓
102 Bid, Award, and Execution of Contract	2/16/2005	✓	✓	✓
103 - Scope of Work	***FP-03***	✓	✓	✓
103.00 Deletions	2/16/2005	✓	✓	✓
104 - Control of Work	***FP-03***	✓	✓	✓
104.00 Deletions	6/16/2006	✓	✓	✓
104.03 Specifications and Drawings	1/22/2009	✓	✓	✓
104.06 Use of Roads by Contractor	2/17/2005	✓	✓	✓
105 - Control of Material	***FP-03***	✓	✓	✓
105.02 Material Sources.	3/08/2007	✓	✓	✓
105.05 Use of Material Found in the Work.	5/12/2004	✓	✓	✓
106 - Acceptance of Work	***FP-03***	✓	✓	✓
106.01 Conformity with Contract Requirements	7/31/2007	✓	✓	✓
106.07 Delete	5/11/2004	✓	✓	✓
107 - Legal Relations and Responsibility to the Public	***FP-03***	✓	✓	✓
107.05 Responsibility for Damage Claims.	5/11/2004	✓	✓	✓
107.06 Contractor's Responsibility for Work.	6/16/2006	✓	✓	✓
107.08 Sanitation, Health, and Safety	3/29/2005	✓	✓	✓
107.09 Legal Relationship of the Parties.	6/16/2006	✓	✓	✓
108 - Prosecution and Progress	***2/16/2005***	✓	✓	✓
109 - Measurement and Payment	***FP-03***	✓	✓	✓
109.00 Deletions	2/17/2005	✓	✓	✓
109.02 Measurement Terms and Definitions	6/16/2006	✓	✓	✓

Continued...

		NFSR #2032417	NFSR #2032428	NFSR #2032430
Forest Service Supplement Specification	***Revised***			
151 - Mobilization	***FP-03***	✓	✓	✓
155 – Schedules for Construction Contracts	***5/11/2004***	✓	✓	✓
156 - Public Traffic	***4/24/2008***	✓	✓	✓
157 - Soil Erosion Control	***FP-03***	✓	✓	✓
157.02 Materials	8/23/2004	✓	✓	✓
157.03 General	2/24/2005	✓	✓	✓
170 - Develop Water Supply and Watering	***3/26/2007***	✓	✓	✓
203 - Removal of Structures and Obstructions	***FP-03***	✓	✓	✓
203.01 Description.	2/25/2005	✓	✓	✓
203.04 Removing Material.	2/18/2005	✓	✓	✓
203.05 Disposing of Material.	3/26/2007	✓	✓	✓
204 - Excavation and Embankment	***2/11/2008***	✓	✓	✓
207 - Earthwork Geotextiles	***FP-03***	✓		✓
209 - Structure Excavation and Backfill	***FP-03***	✓	✓	✓
209.07 Dewatering.	7/12/2007	✓	✓	✓
209.10 Backfill.	5/01/2007	✓	✓	✓
209.11 Compacting	5/01/2007	✓	✓	✓
251 – Riprap	***FP-03***	✓		✓
251.03 General.	8/5/2009	✓		✓
322 – Minor Aggregate Courses	***10/24/2007***	✓	✓	✓
602 - Culverts and Drains	***FP-03***	✓	✓	✓
602.03 General.	9/6/2005	✓	✓	✓
602.03 General.	3/26/2007	✓	✓	✓
635 - Temporary Traffic Control	***FP-03***	✓	✓	✓
635.03 General.	5/13/2004	✓	✓	✓
703 – Aggregate	***FP-03***	✓	✓	✓

Continued…

		NFSR #2032417	NFSR #2032428	NFSR #2032430
Forest Service Supplement Specification	***Revised***			
703.05 Subbase, Base, Surface Course, and Screened Aggregate.	8/14/2009	✓	✓	✓
704 – Soil	***FP-03***	✓	✓	✓
704.02 Bedding Material.	3/2/2005	✓	✓	✓
713 - Roadside Improvement Material	***FP-03***	✓	✓	✓
713.05 Mulch.	3/2/2005	✓	✓	✓
714 - Geotextile and Geocomposite Drain Material	***FP-03***	✓		✓
Tables 714-1 and 714-4.	2/25/2005	✓		✓
718 - Traffic Signing and Marking Material	***FP-03***	✓	✓	✓
718.05 Aluminum Panels	8/5/2009	✓	✓	✓

Willamette National Forest
Sweet Home Ranger District
Linn County

FP-03 - SUPPLEMENTAL SPECIFICATIONS

for

FALL THIN TIMBER SALE

Preface

Preface_wo_03_15_2004_m

Delete all but the first paragraph and add the following:

The Forest Service, US Department of Agriculture has adopted FP-03 for construction of National Forest System Roads.

101 - Terms, Format, and Definitions

101.01_nat_us_01_22_2009

101.01 Meaning of Terms

Delete all references to the TAR (Transportation Acquisition Regulations) in the specifications.

101.01_nat_us_01_22_2009

101.01 Meaning of Terms

Delete all references to the FAR (Federal Acquisition Regulations) in the specifications.

101.03_nat_us_06_16_2006

101.03 Abbreviations.

Add the following to (a) Acronyms:

AFPA	American Forest and Paper Association
MSHA	Mine Safety and Health Administration
NIST	National Institute of Standards and Technology
NESC	National Electrical Safety Code
WCLIB	West Coast Lumber Inspection Bureau

Add the following to (b) SI symbols:

mp	Milepost
ppm	Part Per Million

101.04_nat_us_03_29_2007

101.04 Definitions.

Delete the following definitions and substitute the following:

Bid Schedule--The Schedule of Items.

Bridge--No definition.

Contractor--The individual or legal entity contracting with the Government for performance of prescribed work. In a timber sale contract, the contractor is the "purchaser".

Culvert--No definition.

Right-of-Way--A general term denoting (1) the privilege to pass over land in some particular line (including sement, lease, permit, or license to occupy, use, or traverse public or private lands), or (2) Real property necessary for the project, including roadway, buffer areas, access, and drainage areas.

Add the following:

Adjustment in Contract Price--"Equitable adjustment," as used in the Federal Acquisition Regulations, or "construction cost adjustment," as used in the Timber Sale Contract, as applicable.

Change--"Change" means "change order" as used in the Federal Acquisition Regulations, or "design change" as used in the Timber Sale Contract.

Design Quantity--"Design quantity" is a Forest Service method of measurement from the FS-96 *Forest Service Specifications for the Construction of Roads and Bridges.* Under these FP specifications this term is replaced by the term "Contract Quantities".

Forest Service--The United States of America, acting through the Forest Service, U.S. Department of Agriculture.

Neat Line--A line defining the proposed or specified limits of an excavation or structure.

Pioneer Road--Temporary construction access built along the route of the project.

Purchaser--The individual, partnership, joint venture, or corporation contracting with the Government under the terms of a Timber Sale Contract and acting independently or through agents, employees, or subcontractors.

Protected Streamcourse--A drainage shown on the plans or timber sale area map that requires designated mitigation measures.

Road Order--An order affecting and controlling traffic on roads under Forest Service jurisdiction. Road Orders are issued by a designated Forest Officer under the authorities of 36 CFR, part 260.

Schedule of Items--A schedule in the contract that contains a listing and description of construction items, quantities, units of measure, unit price, and amount.

Utilization Standards--The minimum size and percent soundness of trees described in the specifications to determine merchantable timber.

Add Figure 101-1—Illustration of road structure terms:

Figure 101-1—Illustration of road structure terms.

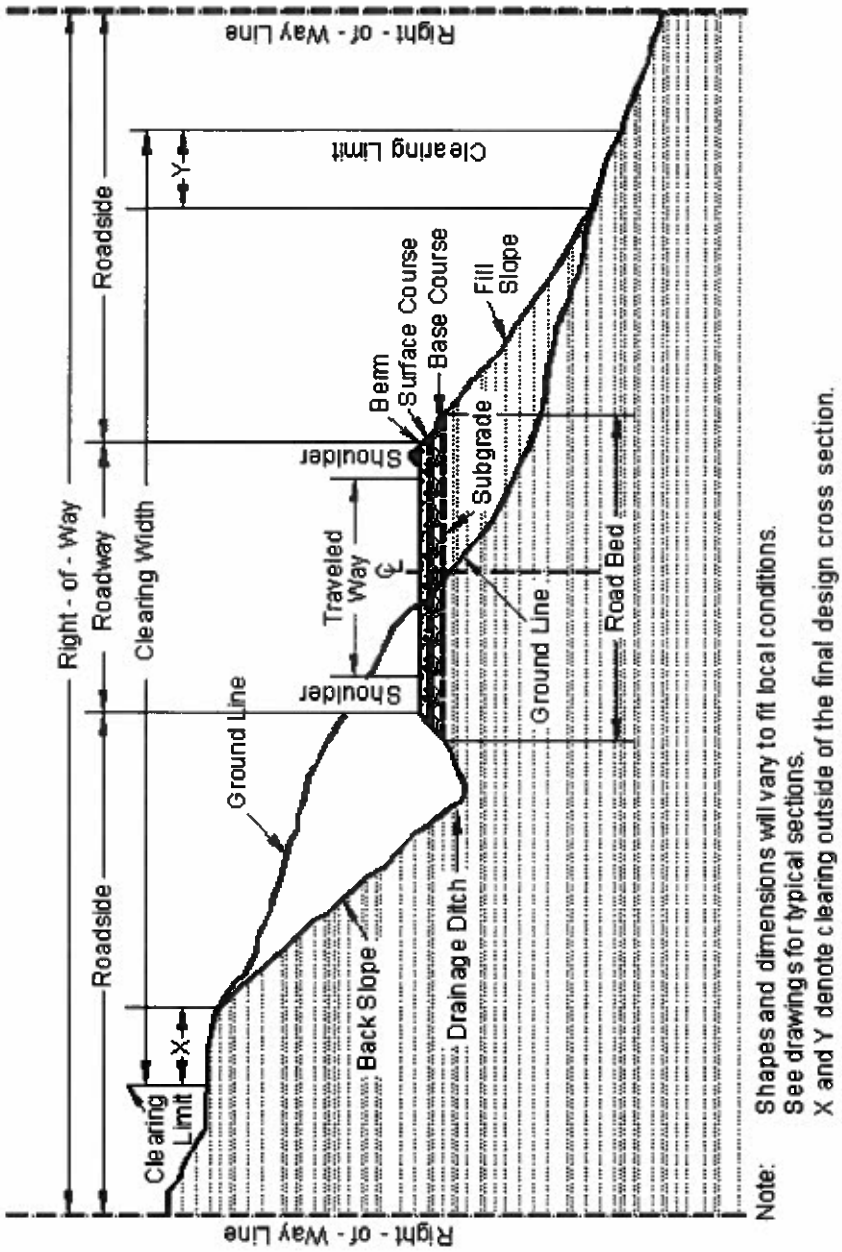

101.04_nat_us_11_06_2007

101.04 Definitions.

Delete the following definitions:

Contract Modification

Day

Notice to Proceed

Solicitation

102 - Bid, Award, and Execution of Contract

102.00_nat_us_02_16_2005

102 Bid, Award, and Execution of Contract

Delete Section 102 in its entirety.

103 - Scope of Work

103.00_nat_us_02_16_2005

Deletions

Delete all but subsection 103.01 Intent of Contract.

104 - Control of Work

104.00_nat_us_06_16_2006

Deletions

Delete Sections 104.01, 104.02, and 104.04.

104.03_nat_us_01_22_2009

104.03 Specifications and Drawings.
Delete 104.03.

104.06_nat_us_02_17_2005

Add the following subsection:

104.06 Use of Roads by Contractor

The Contractor is authorized to use roads under the jurisdiction of the Forest Service for all activities necessary to complete this contract, subject to the limitations and authorizations designated in the Road Order(s) or described in the contract, when such use will not damage the roads or national forest resources, and when traffic can be accommodated safely.

105 - Control of Material

105.02_nat_us_03_08_2007

105.02 Material Sources.

105.02(a) Contractor-provided sources.

Add the following:

All material (e.g., soil, gravel, sand, borrow, aggregate, etc.) transported onto National Forest System land or incorporated into the work will be weed-free. The Contracting Officer may request written documentation of methods used to determine the weed-free status of any and all materials furnished by the contractor. Contractor-provided expertise and methods to establish weed-free status must be appropriate for the weeds of concern in the local area.

105.05_nat_us_05_12_2004

105.05 Use of Material Found in the Work.

Delete 105.05 (a) and (b) and the last sentence of the second paragraph and substitute the following:

Materials produced or processed from Government lands in excess of the quantities required for performance of this contract are the property of the Government. The Government is not obligated to make reimbursement for the cost of producing these materials.

106 - Acceptance of Work

106.01_nat_us_07_31_2007

106.01 Conformity with Contract Requirements.

Delete Subsection 106.01 and substitute the following:

References to standard test methods of AASHTO, ASTM, GSA, and other recognized standard authorities refer to the methods in effect on the date of solicitation for bids.

Perform all work to the lines, grades, cross-sections, dimensions, and processes or material requirements shown on the plans or specified in the contract.

Incorporate manufactured materials into the work according to the manufacturer's recommendations or to these specifications, whichever is more strict.

Plan dimensions and contract specification values are the values to be strived for and complied with as the design values from which any deviations are allowed. Perform work and provide material that is uniform in character and reasonably close to the prescribed value or within the specified tolerance range. The purpose of a tolerance range is to accommodate occasional minor variations from the median zone that are unavoidable for practical reasons.

When standard manufactured items are specified (such as fence, wire, plates, rolled shapes, pipe conduits, etc., that are identified by gauge, unit mass, section dimensions, etc.), the identification will be considered to be nominal masses or dimensions. Unless specific contract tolerances are noted, established manufacturing tolerances will be accepted.

The Government may inspect, sample, or test all work at any time before final acceptance of the project. When the Government tests work, copies of test reports are furnished to the Contractor upon request. Government tests may or may not be performed at the work site. If Contractor testing and inspection is verified by the Government, the Contractor's results may be used by the Government to evaluate work for acceptance. Do not rely on the availability of Government test results for process control.

Acceptable work conforming to the contract will be paid for at the contract unit bid price. Four methods of determining conformity and accepting work are described in Subsections 106.02 to 106.05 inclusive. The primary method of acceptance is specified in each Section of work. However, work may be rejected at any time it is found by any of the methods not to comply with the contract.

Remove and replace work that does not conform to the contract, or to prevailing industry standards where no specific contract requirements are noted, at no cost to the Government.

(a) Disputing Government test results. **If the accuracy of Government test results is disputed, promptly inform the CO. If the dispute is unresolved after reasonable steps are taken to resolve the dispute, further evaluation may be obtained by written request. Include a narrative describing the dispute and a proposed resolution protocol that addresses the following:**

(1) Sampling method;
(2) Number of samples;
(3) Sample transport;
(4) Test procedures;
(5) Testing laboratories;
(6) Reporting;
(7) Estimated time and costs; and
(8) Validation process.

If the evaluation requires additional sampling or testing be performed, mutually agree with the Government on witnessing procedures and on sampling and testing by a third party laboratory. Use a third party laboratory accredited by the AASHTO accreditation program. Provide proof of the laboratory's accreditation for the test procedures to be used. Do not use the same laboratory that produced the disputed Government test results or that produced the test results used as a basis for the dispute. The CO will review the proposed resolution protocol and may modify it before final approval and execution.

The Government will use the approved resolution protocol test results to determine the validity of the disputed testing. If the Government test results are validated, the Contractor will be responsible for all costs associated with developing and performing the resolution protocol. If the Government test results are not validated, the Government will be responsible for all costs associated with developing and performing the resolution protocol. If the validity of the Government test results cannot be determined, the Contractor and Government will equally share all costs associated with developing and carrying out the resolution protocol.

(b) Alternatives to removing and replacing non-conforming work. As an alternative to removal and replacement, the Contractor may submit a written request to:

(1) Have the work accepted at a reduced price; or

(2) Be given permission to perform corrective measures to bring the work into conformity.

The request must contain supporting rationale and documentation. Include references or data justifying the proposal based on an evaluation of test results, effect on service life, value of material or work, quality, aesthetics, and other tangible engineering basis. The CO will determine disposition of the nonconforming work.

106.07_nat_us_05_11_2004

106.07 Delete

Delete subsection 106.07.

107 - Legal Relations and Responsibility to the Public

107.05_nat_us_05_11_2004

107.05 Responsibility for Damage Claims.

Delete the entire subsection.

107.06_nat_us_06_16_2006

107.06 Contractor's Responsibility for Work.

Delete the following from the first paragraph.
"except as provided in Subsection 106.07".

107.08_nat_us_03_29_2005

107.08 Sanitation, Health, and Safety

Delete the entire subsection.

107.09_nat_us_06_16_2006

107.09 Legal Relationship of the Parties.

Delete the entire subsection.

108 - Prosecution and Progress

108.00_nat_us_02_16_2005

108 Delete.

Delete Section 108 in its entirety.

109 - Measurement and Payment

109.00_nat_us_02_17_2005

109 Deletions

Delete the following entire subsections:

109.06 Pricing of Adjustments.

109.07 Eliminated Work.

109.08 Progress Payments.

109.09 Final Payment.

109.02_nat_us_06_16_2006

109.02 Measurement Terms and Definitions.

(b) Contract quantity.

Add the following:

Contract quantities will be adjusted only when there are errors in the original design of 15% or more.

Change the following:

(b) Cubic yard" to "(c) Cubic yard".

Add the following definition:

(p) Thousand Board Feet (Mbf). 1,000 board feet based on nominal widths, thickness, and extreme usable length of each piece of lumber or timber actually incorporated in the job. For glued laminated timber, 1,000 board feet based on actual width, thickness, and length of each piece actually incorporated in the job.

155 - Schedules for Construction Contracts

155.00_nat_us_05_11_2004

155 Delete.

Delete Section 155 in its entirety.

156 - Public Traffic

156.00_0618_us_04_28_2008

Delete Section 156 in its entirety and replace with the following:

Description

156.01 This work consists of controlling and protecting public traffic adjacent to and within the project.

Material

156.02 Conform to the MUTCD and the following Sections and Subsections:

Construction sign panels	633
Retro-reflective sheeting	718.01
Temporary concrete barrier	618
Temporary plastic fence	710.11
Temporary traffic control devices	718.22

156.03 General. Unless otherwise provided for in Table 156-1, keep existing roads open to all traffic during road improvement work, and maintain them in a condition that will adequately accommodate traffic. Delays may not exceed **30** minutes at any one time followed by an open period of no less than **5** minutes.

Perform no work that interferes or conflicts with traffic or existing access to the roadway surface until a traffic control plan has been approved. Post construction signs and traffic control devices in conformance with MUTCD. All required signs will be in place and approved prior to beginning work on project.

If the Contractor agrees in writing to allow public traffic to use a new road being constructed prior to completion, it will be considered an existing road for traffic control purposes.

156.04 Temporary Traffic Control. Install and maintain temporary traffic control devices adjacent to and within the project as required by the approved traffic control plan and the MUTCD. Install and maintain traffic control devices as follows:

(a) Furnish and install traffic control devices before the start of construction operations.
(b) All detours outside of clearing limits will be approved in writing by the Contracting Officer as part of the traffic control plan.
(c) Install only those traffic control devices needed for each stage or phase.
(d) Relocate temporary traffic control devices as necessary.
(e) Remove devices that no longer apply to the existing conditions.
(f) Immediately replace any device that is lost, stolen, destroyed, or inoperative.
(g) Keep temporary traffic control devices clean.
(h) Remove all temporary traffic control devices upon contract completion or when approved.
(i) When required, use flaggers certified by the American Traffic Safety Services Association, the National Safety Council, the International Municipal Signal Association, a state agency, or other acceptable organization. Perform the work described under MUTCD Part 6. Use type III, VII, VIII, or IX retroreflective sheeting on flagger paddles. Do not use flags. Flaggers must wear high visibility safety apparel as required by MUTCD 6E.02.

156.05 Temporary Closures. Road segments may be closed as shown in Table 156-1. The maximum consecutive days of closure shall be followed by a minimum number of consecutive days open to traffic as shown. Maintain traffic control devices during closure period(s). Appropriate barricades and signs will be erected and maintained as shown in the traffic control plan or as otherwise designated.

Prior to closing roads during construction, give written notice to the Contracting Officer at least 10 days in advance.

Table 156-1
Temporary Road Closures

Road Number	From Terminus	To Terminus	Maximum Consecutive Days of Closure	Minimum Consecutive Days Open
NA				

156.06 Acceptance. Public traffic work will be evaluated under Subsection 106.02.

Traffic control devices and services will be evaluated under Section 635.

Measurement and Payment

156.07 See Subsection 109.05.

Measure traffic control under Section 635.

157 - Soil Erosion Control

157.02_01_us_08_23_2004

157.02 Materials

Add the following:

Provide bales, wattles, logs and rolls from a certified noxious weed free source.

157.03_nat_us_02_24_2005

157.03 General

Delete the entire subsection and replace with the following:

Prior to the start of construction, submit a written plan that provides permanent and temporary erosion control measures to minimize erosion and sedimentation during and after construction. Do not begin work until the necessary controls for that particular phase of work have been implemented. Do not modify the type, size, or location of any control. An alternate erosion control plan with all necessary permits may be submitted 30 days before intended use.

Incorporate all permanent erosion control features into the project at the earliest practicable time, as outlined in the approved plan.

When erosion control measures are not functioning as intended, immediately take corrective action.

170 - Develop Water Supply and Watering

170.00_0618_us_03_26_2007

Description

170.01 This work consists of developing an acceptable water supply, furnishing, hauling, and applying water.

Materials

170.02 Conform to the following subsection.

Water	725.01.

Construction Requirements

170.03 Development of Supply & Access. Develop water supplies and access to the water supplies as required. Use designated water sources or other approved water sources. Before using non-designated water sources, obtain all necessary permissions, water rights, and permits.

170.04 Equipment.

(a) Water tanks. Provide mobile watering equipment with watertight tanks of known capacity. Provide for positive control of water application from the driver's position.

) Juvenile fish protection. All draft hoses being used to withdraw water from any live flowing stream or ›nd will utilize one of the following methods of screening.

(1) Perforated plate: Screen opening shall not exceed 3/32 or 0.0938-inches.

(2) Profile bar screen: The narrowest dimension in the screen openings shall not exceed 0.0689-inches in the narrowest direction.

(3) Woven wire screen: Screen openings shall not exceed 3/32 or 0.0938-inches in the narrow direction.

All methods shall be cleaned frequently with either wire brushing, flushing or other acceptable method.

170.05 Application. Apply water uniformly without ponding or washing.

170.06 Acceptance. Developing water supplies and watering will be evaluated under Subsections 106.02 and 106.04.

Measurement and Payment

170.07 See Subsection 109.05.
Do not measure develop water supply and watering for payment.

203 - Removal of Structures and Obstructions

203.01_nat_us_02_25_2005

203.01 Description.

Delete and replace with the following:

This work consists of disposing of construction slash and debris, salvaging, removing, and disposing of buildings, fences, structures, pavements, culverts, utilities, curbs, sidewalks, and other obstructions.

203.04_nat_us_02_18_2005

203.04 Removing Material.

Replace the fourth and fifth paragraphs with the following:

Where part of an existing culvert is removed, remove the entire culvert upstream from the removal. The remaining downstream culvert may be left in place if no portion of the culvert is within 12 inches of the subgrade, embankment slope, or new culvert or structure; and the culvert ends are sealed with concrete.

Remove structures and obstructions in the roadbed to 12 inches below subgrade elevation. Remove structures and obstructions outside the roadbed to 12 inches below finished ground or to the natural stream bottom.

203.05_0618_us_03_26_2007

203.05 Disposing of Material.

(a) Remove from Project

204 - Excavation and Embankment

204.00_0618_us_02_11_2008

Delete Section 204 in its entirety and replace with the following.

Description

204.01 This work consists of excavating material, constructing embankments and drainage excavation. This includes furnishing, hauling, stockpiling, placing, disposing, sloping, shaping, compacting, and finishing sand, earthen, and rocky material.

204.02 Definitions.

(a) Excavation. Excavation consists of the following:

(1) Roadway excavation. All material excavated from within the right-of-way or easement areas, except subexcavation covered in (2) below and structure excavation covered in Sections 208 and 209. Roadway excavation includes all material encountered regardless of its nature or characteristics.

(2) Subexcavation. Material excavated from below subgrade elevation in cut sections or from below the original groundline in embankment sections. Subexcavation does not include the work required by Subsections 204.05, 204.06(b), and 204.06(c).

(3) Borrow excavation. Material used for embankment construction that is obtained from outside the roadway prism. Borrow excavation includes unclassified borrow, select borrow, and select topping.

(b) Embankment construction. Embankment construction consists of placing and compacting roadway or borrow excavation. This work includes:

(1) Preparing foundation for embankment;
(2) Constructing roadway embankments;
(3) Benching for side-hill embankments;
(4) Constructing dikes, ramps, mounds, and berms; and
(5) Backfilling subexcavated areas, holes, pits, and other depressions.

(c) Conserved topsoil. Excavated material conserved from the roadway excavation and embankment foundation areas that is suitable for growth of grass, cover crops, or native vegetation.

(d) Waste. Excess and unsuitable roadway excavation and subexcavation that cannot be used.

Material

204.03 Conform to the following Subsections:

Backfill material	704.03
Select borrow	704.07

Select topping	704.08
Topping	704.05
Unclassified borrow	704.06
Water	725.01

Construction Requirements

204.04 Preparation for Roadway Excavation and Embankment Construction. Clear the area of vegetation and obstructions according to Sections 201 and 203.

204.05 Reserved.

204.06 Roadway Excavation. Excavate as follows:

(a) General. Do not disturb material and vegetation outside the construction limits.

Incorporate only suitable material into embankments. Replace any shortage of suitable material caused by premature disposal of roadway excavation

At the end of each day's operations, shape to drain and compact the work area to a uniform cross-section. Eliminate all ruts and low spots that could hold water.

Retrieve material deposited outside of the clearing limits as directed by the CO.

(b) Rock cuts. Blast rock according to Section 205. Excavate rock cuts to 6 inches below subgrade within the roadbed limits. Backfill to subgrade with topping or with other suitable material. Compact the material according to Subsection 204.11 When blasting rock, use blasting methods according to Subsection 205.08.

(c) Earth cuts. Scarify earth cuts to 6 inches below subgrade within the roadbed limits. Compact the scarified material according to Subsection 204.11.

(d) Pioneer Roads. Road pioneering, slash disposal, and grubbing of stumps may proceed concurrently with excavation. Conduct excavation and placement operations so material to be treated under Section 201 will not be incorporated into the roadway unless specified in the slash treatment method. Maintain drainage during pioneering operations.

Remove snow and ice in advance of the work and deposit beyond the roadway limits in a manner that will not waste material or generate sediment. Do not incorporate snow and ice into embankments. Place snow or ice in a manner to prevent resource damage.

(e) Drainage Excavation. Drainage excavation includes construction of all ditches, minor channel changes, drainage dips, catchbasins, surface water deflectors, and other minor drainage structures. Compact by Method (f) unless otherwise shown on the plans. Excavate on a uniform grade between control points.

204.07 Subexcavation. Excavate material to the limits as designated. Take cross-sections according to Section 152. Prevent unsuitable material from becoming mixed with the backfill. Dispose of unsuitable material according to Subsection 204.14. Backfill the subexcavation with topping, or other suitable material. Compact the material according to Subsection 204.11.

204.08 Borrow Excavation. Use all suitable roadway excavation in embankment construction. Do not use borrow excavation when it results in excess roadway excavation. Deduct excess borrow excavation from the propriate borrow excavation quantity.

Obtain borrow source acceptance according to Subsection 105.02. Develop and restore borrow sources according to Subsection 105.03. Do not excavate beyond the established limits. When applicable, shape the borrow source to permit accurate measurements when excavation is complete.

204.09 Preparing Foundation for Embankment Construction. Prepare foundation for embankment construction as follows:

(a) Embankment less than 4 feet high over natural ground. Unless otherwise designated by the CO, remove topsoil. Break up the ground surface to a minimum depth of 6 inches by plowing or scarifying. Compact the ground surface according to Subsection 204.11.

(b) Embankments over an existing asphalt, concrete, or gravel road surface. Scarify gravel roads to a minimum depth of 6 inches. Scarify or pulverize asphalt and concrete roads to 6 inches below the pavement. Reduce all particles to a maximum size of 6 inches and produce a uniform material. Compact the surface according to Subsection 204.11.

(c) Embankment across ground not capable of supporting equipment. Dump successive loads of embankment material in a uniformly distributed layer to construct the lower portion of the embankment. Limit the layer thickness to the minimum depth necessary to support the equipment.

(d) Embankment on an existing slope steeper than 1V:3H. Cut horizontal benches in the existing slope to a sufficient width to accommodate placement and compaction operations and equipment. Bench the slope as the embankment is placed and compacted in layers. Begin each bench at the intersection of the original ground and the vertical cut of the previous bench.

204.10 Embankment Construction. Incorporate only suitable roadway excavation material into the embankment. When the supply of suitable roadway excavation is exhausted, furnish unclassified borrow to complete the embankment. Obtain written approval before beginning construction of embankments over 6 feet high at subgrade centerline. Construct embankments as follows:

(a) General. At the end of each day's operations, shape to drain and compact the embankment surface to a uniform cross-section. Eliminate all ruts and low spots that could hold water.

During all stages of construction, route and distribute hauling and leveling equipment over the width and length of each layer of material.

Compact embankment side slopes flatter than 1V:1.75H with a tamping type roller or by walking with a dozer. For slopes 1V:1.75H or steeper, compact the slopes as construction of the embankment progresses.

Where placing embankment on one side of abutments, wing walls, piers, or culvert headwalls, compact the material using methods that prevent excessive pressure against the structure.

Where placing embankment material on both sides of a concrete wall or box structure, conduct operations so compacted embankment material is at the same elevation on both sides of the structure.

Where structural pilings are placed in embankment locations, limit the maximum particle size to 4 inches.

(b) Embankment within the roadway prism. Place embankment material in horizontal layers not exceeding 12 inches in compacted thickness. Incorporate oversize boulders or rock fragments into the 12-inch layers by reducing them in size or placing them individually as required by (c) below. Compact each layer according to Subsection 204.11 before placing the next layer.

Material composed predominately of boulders or rock fragments too large for 12-inch layers may be placed in layers up to 24 inches thick. Incorporate oversize boulders or rock fragments into the 24-inch layer by reducing them in size or placing them individually according to (c) below. Place sufficient earth and

smaller rocks to fill the voids. Compact each layer according to Subsection 204.11 before placing the next layer.

(c) Individual rock fragments and boulders. Place individual rock fragments and boulders greater than 24 inches in diameter as follows:

(1) Reduce rock to less than 48 inches in the largest dimension.

(2) Distribute rock within the embankment to prevent nesting.

(3) Place layers of embankment material around each rock to a depth not greater than that permitted by (b) above. Fill all the voids between rocks.

(4) Compact each layer according to Subsection 204.11 before placing the next layer.

(d) Embankment outside of roadway prism. Where placing embankment outside the staked roadway prism, place material in horizontal layers not exceeding 24 inches in compacted thickness. Compact each layer according to Subsection 204.11.

204.11 Compaction. Compact the embankment using one of the following methods as specified:

(a) Compaction A. Use AASHTO T 27 to determine the amount of material retained on a Number 4 sieve. If there is more than 80 percent retained on the No. 4 sieve use procedure (1). If there is 50 to 80 percent retained on the No. 4 sieve use procedure (2). If there is less than 50 percent retained on the No. 4 sieve use procedure (3).

(1) Adjust the moisture content to a level suitable for compaction. Fill the interstices around rock with earth or other fine material as practical. Use compression-type rollers at speeds less than 6 feet per second and vibratory rollers at speeds less than 3 feet per second. Compact each layer of material full width with one of the following and until there is no visible evidence of further consolidation.

(a) Four roller passes of a vibratory roller having a minimum dynamic force of 40,000 pounds impact per vibration and a minimum frequency of 1000 vibrations per minute.

(b) Eight roller passes of a 20-ton compression-type roller.

(c) Eight roller passes of a vibratory roller having a minimum dynamic force of 30,000 pounds impact per vibration and a minimum frequency of 1000 vibrations per minute.

Increase the compactive effort for layers deeper than 12 inches as follows:

- For each additional 6 inches or fraction thereof, increase the number of roller passes in (a) above by four passes.
- For each additional 6 inches or fraction thereof, increase the number of roller passes in (b) and (c) above, by eight passes.

(2) Use AASHTO T 99 to determine the optimum moisture content of the portion of the material passing a No. 4 sieve. Multiply this number by the percentage of material passing a No. 4 sieve, and add 2 percent to determine the optimum moisture content of the material. Adjust the moisture content of material classified A-1 through A-5 to a moisture content suitable for compaction. Adjust the moisture content of material classified A-6 and A-7 to within 2 percent of the optimum moisture content.

Use compression-type rollers at speeds less than 6 feet per second and vibratory rollers at speeds less than 3 feet per second. Compact each layer of material full width according to (1) above.

(3) Classify the material according to AASHTO M 145. For material classified A-1 or A-2-4, determine the maximum density according to AASHTO T 180, method D. For other material classifications, determine the optimum moisture content and maximum density according to AASHTO T 99, method C.

Adjust the moisture content of material classified A-1 through A-5 to a moisture content suitable for compaction. Adjust the moisture content of material classified A-6 and A-7 to within 2 percent of the optimum moisture content.

Use compression-type or vibratory rollers. Compact each layer of material full width to at least 95 percent of the maximum density. Determine the in-place density and moisture content according to AASHTO T 310 or other approved test procedures. When required, use AASHTO T 224 to correct for coarse particles.

(b) **Compaction B.** Place material by end dumping to the minimum depth needed for operation of spreading equipment. Adjust the moisture content of the material to obtain a mass that will not visibly deflect under the load of the hauling and spreading equipment. Operate compaction equipment over the full width of each layer until there is no visible evidence of further consolidation or, if when a sheepsfoot roller is used, the roller "walks out" of the layer. Make at least three complete passes.

(c) **Compaction C.** Place material by end dumping to the minimum depth needed for operation of spreading equipment. Level and smooth each embankment layer before placing the next layers. Operate hauling and spreading equipment uniformly over the full width of each layer. Construct a solid embankment with adequate compaction by working smaller rock and fines in with the larger rocks to fill the voids, and by operating hauling and spreading equipment uniformly over the full width of each layer as the embankment is constructed.

(d) **Compaction D.** Hauling and Spreading Equipment. Adjust the moisture content to a level suitable for compaction. Compact the material by operating equipment over the full width of the roadway.

(e) **Compaction E**. Roller Compaction. Adjust the moisture content to a level suitable for compaction. Operate Rollers over the full width of each layer until visual displacement ceases, but not fewer than three complete passes. Use rollers that meet the following requirements:

(1) Steel wheeled rollers, other than vibratory, capable of exerting a force of not less than 250 pounds per inch of width of the compression roll or rolls.

(2) Vibratory steel wheeled rollers equipped with amplitude and frequency controls with a minimum weight of 6 tons, specifically designed to compact the material on which it is used.

(3) Pneumatic-tired rollers with smooth tread tires of equal size that will provide a uniform compacting pressure for the full width of the roller and capable of exerting a ground pressure of at least 80 psi.

(4) Sheepsfoot, tamping, or grid rollers capable of exerting a force of 250 lbs/inch of width of roller drum.

(f) **Compaction F.** Mechanical Tamper. Adjust the moisture content of the backfill material to a moisture content suitable for compaction. Compact each 6 inch layer with a minimum of three complete passes with a mechanical tamper.

204.12 Ditches. Slope, grade, and shape ditches. Remove all projecting roots, stumps, rock, or similar matter. Maintain all ditches in an open condition and free from leaves, sticks, and other debris.

Form furrow ditches by plowing or using other acceptable methods to produce a continuous furrow. Place all excavated material on the downhill side so the bottom of the ditch is approximately 18 inches below the crest of

the loose material. Clean the ditch using a hand shovel, ditcher, or other suitable method. Shape to provide ainage without overflow.

204.13 Sloping, Shaping, and Finishing. Complete slopes, ditches, culverts, riprap, and other underground minor structures before placing aggregate courses. Slope, shape, and finish as follows:

(a) Sloping. Leave all earth slopes with uniform roughened surfaces, except as described in (b) below, with no noticeable break as viewed from the road. Except in solid rock, round tops and bottoms of all slopes including the slopes of drainage ditches. Round material overlaying solid rock to the extent practical. Scale all rock slopes. Slope rounding is not required on tolerance class D though M roads.

If a slide or slipout occurs on a cut or embankment slope, remove or replace the material, and repair or restore all damage to the work. Bench or key the slope to stabilize the slide. Reshape the cut or embankment slope to an acceptable condition.

(b) Stepped slopes. Where required by the contract, construct steps on slopes of 1⅓V:1H to 1V:2H. Construct the steps approximately 18 inches high. Blend the steps into natural ground at the end of the cut. If the slope contains nonrippable rock outcrops, blend steps into the rock. Remove loose material found in transitional area. Except for removing large rocks that may fall, scaling stepped slopes is not required.

(c) Shaping. Shape the subgrade to a smooth surface and to the cross-section required. Shape slopes to gradually transition into slope adjustments without noticeable breaks. At the ends of cuts and at intersections of cuts and embankments, adjust slopes in the horizontal and vertical planes to blend into each other or into the natural ground.

(d) Finishing. Finish the roadbed to be smooth and uniform, and shaped to conform to the typical sections. Remove unsuitable material from the roadbed and replace it with suitable material. Finish roadbeds to the tolerance class shown in table 204-2.Ensure that the subgrade is visibly moist during shaping and dressing. Scarify to 6 inches below the bottom of low sections, holes, cracks, or depressions and bring back to grade with suitable material. Maintain proper ditch drainage.

For surfaced roads, remove all material larger than 6 inches from the top 6 inches of the roadbed.

For unsurfaced roads, use one of the following methods to finish the roadbed:

(1) Method A. Remove all material larger than 6 inches from the top 6 inches of the roadbed and replace with suitable material.

(2) Method B. Use a vibratory grid roller or approved equal with a minimum weight of 10 tons. Roll at least 5 full-width passes or until there is no visible evidence of further consolidation.

(3) Method C. For roads designated as Construction Tolerance Class K, L, or M, finish the roadbed by spreading the excavation. Eliminate rock berms.

204.14 Disposal of Unsuitable or Excess Material. Dispose of unsuitable or excess material at designated sites or legally off of the project.

When there is a pay item for waste, shape and compact the waste material in its final location according to Subsection 204.11 (c) Compaction C. Do not mix clearing or other material not subject to payment with the waste material. When there is not a pay item for waste, shape and compact the waste material in its final location according to Subsection 204.11 (c) Compaction C.

4.15 Acceptance. See Table 204-1 for sampling and testing requirements.

Material for embankment and conserved topsoil will be evaluated under Subsections 106.02 and 106.04.

Excavation and embankment construction will be evaluated under Subsections 106.02 and 106.04.

earing and removal of obstructions will be evaluated under Sections 201 and 203.

Measurement

204.16 Measure the Section 204 items listed in the bid schedule according to Subsection 109.02 and the following as applicable.

(a) Roadway excavation. Measure roadway excavation in its original position as follows:

(1) Include the following volumes in roadway excavation:

(a) Roadway prism excavation;

(b) Rock material excavated and removed from below subgrade in cut sections;

(c) Unsuitable material below subgrade and unsuitable material beneath embankment areas when a pay item for subexcavation is not shown in the bid schedule;

(d) Ditches, except furrow ditches measured under a separate bid item;

*(e)*Topsoil;

(f) Borrow material used in the work when a pay item for borrow is not shown in the bid schedule;

(g) Loose scattered rocks removed and placed as required within the roadway;

(h) Conserved material taken from stockpiles and used in Section 204 work; and

(i) Slide and slipout material not attributable to the Contractor's method of operation.

(2) Do not include the following in roadway excavation:

(a) Overburden and other spoil material from borrow sources;

(b) Overbreakage from the backslope in rock excavation;

(c) Water or other liquid material;

(d) Material used for purposes other than required;

(e) Roadbed material scarified in place and not removed;

(f) Material excavated when stepping cut slopes;

(g) Material excavated when rounding cut slopes;

(h) Preparing foundations for embankment construction;

(i) Material excavated when benching for embankments;

(j) Slide or slipout material attributable to the Contractor's method of operation;

(k) Conserved material taken from stockpiles constructed at the option of the Contractor; and

(l) Material excavated outside the established slope limits.

(3) When both roadway excavation and embankment construction pay items are shown in the bid schedule, measure the following as roadway excavation only:

(a) Unsuitable material below subgrade in cuts and unsuitable material beneath embankment areas when a pay item for subexcavation is not shown in the bid schedule;

(b) Slide and slipout material not attributable to the Contractor's method of operations; and

(c) Drainage ditches, channel changes, and diversion ditches.

(b) Unclassified borrow, select borrow, and select topping. When measuring by the cubic yard measure in its original position. If borrow excavation is measured by the cubic yard in place, take initial cross-sections of the ground surface after stripping overburden. Upon completion of excavation and after the borrow source waste material is returned to the source, retake cross-sections before replacing the overburden.

Do not measure borrow excavation used in place of excess roadway excavation.

(c) Embankment construction. Measure embankment construction in its final position. Do not make deductions from the embankment construction quantity for the volume of minor structures.

(1) Include the following volumes in embankment construction:

(a) Roadway embankments;

(b) Material used to backfill subexcavated areas, holes, pits, and other depressions;

(c) Material used to restore obliterated roadbeds to original contours; and

(d) Material used for dikes, ramps, mounds, and berms.

(2) Do not include the following in embankment construction:

(a) Preparing foundations for embankment construction;

(b) Adjustments for subsidence or settlement of the embankment or of the foundation on which the embankment is placed; and

(c) Material used to round fill slopes.

(d) Rounding cut slopes. Measure rounding cut slopes horizontally along the centerline of the roadway if a pay item for slope rounding is included in the bid schedule. If a pay item for slope rounding is not included in the bid schedule slope rounding will be considered subsidiary to excavation.

(e) Waste. Measure waste by the cubic yard in its final position. Take initial cross-sections of the ground surface after stripping over burden. Upon completion of the waste placement, retake cross-sections before replacing overburden.

(f) Slope scaling. Measure slope scaling by the cubic yard in the hauling vehicle.

Payment

204.17 The accepted quantities will be paid at the contract price per unit of measurement for the Section 204 pay items listed in the bid schedule. Payment will be full compensation for the work prescribed in this Section. See Subsection 109.05.

[illegible].04-1
Sampling and Testing Requirements

Material or Product	Type of Acceptance (Subsection)	Characteristic	Category	Test Methods Specifications	Sampling Frequency	Point of Sampling	Split Sample	Reporting Time
Topping (704.05) & unclassified borrow (704.06)	Measured and tested for conformance (106.04)	Classification	—	AASHTO M 145	1 per soil type	Processed material before incorporating in work	Yes, when requested	Before using in work
		Moisture-density	—	AASHTO T 180, method D(1) or T 99, method C(1)	1 per soil type but not less than 1 per 13,000 yd^3	"	"	"
		Compaction	—	AASHTO T 310 or other approved procedures	1 per 6000 yd^2 but not less than 1 per layer	In-place	—	Before placing next layer
Select borrow (704.07 & Select topping (704.08)	Measured and tested for conformance (106.04)	Classification	—	AASHTO M 145	1 per soil type but not less than 1 for each day of production	Processed material before incorporating in work	Yes, when requested	Before using in work
		Gradation	—	AASHTO T 27 & T 11	"	"	"	"
		Liquid limit	—	AASHTO T 89	"	"	"	"
		Moisture-density	—	AASHTO T 180, method D(1) or T 99, method C(1)	1 per soil type but not less than 1 per 13,000 yd^3	"	"	"
		Compaction	—	AASHTO T 310 or other approved procedures	1 per 6000 yd^2 but not less than 1 per layer	In-place	—	Before placing next layer

(1) Minimum of 5 points per proctor

Table 204-1 (continued)
Sampling and Testing Requirements

Material or Product	Type of Acceptance (Subsection)	Characteristic	Category	Test Methods Specifications	Sampling Frequency	Point of Sampling	Split Sample	Reporting Time
Earth embankment (204.11, Compaction A)	Measured and tested for conformance (106.04)	Classification	—	AASHTO M 145	1 per soil type	Source of Material	Yes, when requested	Before using in work
		Moisture-density	—	AASHTO T 180, method D[1] or T 99, method C[1]	1 per soil type but not less than 1 per 13,000 yd^3	"	"	"
		Compaction	—	AASHTO T 310 or other approved procedures	1 per 3500 yd^2 but not less than 1 per layer	In-place	—	Before placing next layer
Top of subgrade (204.11 Compaction A)	Measured and tested for conformance (106.04)	Compaction	—	AASHTO T 310 or other approved procedures	1 per 2500 yd^2	In-place	—	Before placing next layer

(1) Minimum of 5 points per proctor.

Table 204-2
Construction Tolerances

	Tolerance Class [a]												
	A	B	C	D	E	F	G	H	I	J	K	L	M
Roadbed width (ft)	+0.5	+0.5	+1.0	+1.0	+1.0	+1.0	+1.5	+1.0	+2.0	+2.0	+2.0	+2.0	+2.0
Subgrade elevation (ft)	±0.1	±0.2	±0.2	±0.5	±0.5	±1.0	±1.0	±1.5	±2.0	±3.0	±2.0	±3.0	(c)
Centerline alignment (ft)	±0.2	±0.2	±0.5	±0.5	±1.0	±1.0	±1.5	±1.5	±2.0	±3.0	±3.0	±5.0	(c)
Slopes, excavation, and embankment (% slope[b])	±3	±5	±5	±5	±5	±5	±10	±10	±10	±10	±20	±20	±20

(a) Maximum allowable deviation from construction stakes and drawings.
(b) Maximum allowable deviation from staked slope measured from slope stakes or hinge points.
(c) Unless otherwise shown the centerline alignment and subgrade elevation, as built, have no horizontal curves with a radius of less than 80 feet, and no vertical curves with a curve length of less than 80 feet when the algebraic difference in the grade change is less than 10 percent, or a curve length of less than 100 feet when the algebraic difference of

209 - Structure Excavation and Backfill

.07_0618_us_07_12_2007

209.07 Dewatering.

Delete subsection 209.07 and substitute the following:

Dewatering. Where necessary to dewater, dewater according to Subsection 157.09.

209.10_0618_us_05_01_2007

209.10 Backfill.

(a) General.

Add the following:

Replace any pipe that is distorted by more than 5 percent of nominal dimensions, or that is ruptured or broken.

Do not place or backfill pipe that meets any of the following conditions until the excavation and foundation have been approved in writing by the CO:

- Embankment height greater than 6 feet at subgrade centerline.
- Installation in a protected streamcourse.
- Round pipe with a diameter of 48 inches or greater.
- Pipe arches with a span of 50 inches or greater.
- Any box culvert of structure other than pipe culverts.

(b) Pipe culverts.

(1) Pipe culverts with compacted backfill.

Add the following:

On each side of the pipe, excavate an area at least as wide AS SHOWN ON THE PLANS. Backfill without damaging or displacing the pipe. Complete backfilling of the trench with suitable material.

209.11 Compacting.

Delete the subsection and add the following:

Compact backfill using designated compaction method A, B, or C:

Method A. Ensure that backfill density exceeds the density of the surrounding embankment.

Method B. Adjust the moisture content of the backfill material to a moisture content suitable for compaction. Compact each layer using appropriate compaction equipment until visual displacement ceases. For compaction under sections 252, 254, 255, 257, 258 and 262 compact with a vibratory steel wheeled roller with a mass of at least 8 tons.

Method C. Determine optimum moisture content and maximum density according to AASHTO T 99 method C. Adjust the moisture content of the backfill material to a moisture content suitable for compaction. Compact material placed in all layers to at least 95 percent of the maximum density. Determine the in place density and moisture content according to AASHTO T 310 or other approved test procedures.

Table 209-1 Sampling and Testing Requirements

Add the following:

(2) Compaction methods (A) and (B) do not require AASHTO T-99 or T-310 test methods for foundation fill.

251 - Riprap

251.03_nat_us_08_05_2009

Construction Requirements

251.03 General.

Add the following:

Place riprap under or adjacent to structures before placing prefabricated superstructure units or constructing superstructure falsework unless otherwise approved by the CO.

251.08 Measurement.

Add the following:

Payment for excavation and embankment required for placement of riprap is indirectly included in the pay item for riprap.

322 – Minor Aggregate Courses

322.00_nat_us_10_24_2007

Description

322.01 This work consists of constructing one or more courses of aggregate on a prepared surface. Work includes producing aggregate by grid rolling, screening, or crushing methods, or placing pit-run or Government-furnished aggregate.

Surface aggregate grading is designated as shown in Table 703-3.

Subbase and base aggregate grading is designated as shown in Table 703-2.

Screened aggregate grading is designated as shown in Table 703-16.

Material

322.02 Conform to the following Subsections:

Aggregate	703.05
Water	725.01

Construction Requirements

322.03 General. Prepare the surface on which the aggregate course is placed according to Section 204 or 303 as applicable.

Request approval of the roadbed in writing before placing aggregate.

Develop, haul, and apply water in accordance to Section 170.

Submit target values within the gradation ranges shown in Table 703-2 or 703-3 for the required grading. After reviewing the proposed target values the CO will determine the final values for the gradation and notify the Contractor in writing.

No quality requirements or gradation other than maximum size will be required for pit run and grid-rolled material. For grid rolling, use all suitable material that can be reduced to maximum size.

After processing on the road, remove all oversize material from the road and dispose of it as directed by the CO.

If the aggregate is produced and stockpiled before placement, handle and stockpiled according to Section 320. tablish stockpile sites at approved locations.

322.04 Mixing and Spreading. Mix the aggregate and adjust the moisture content to obtain a uniform mixture with a moisture content suitable for the specified compaction method. Spread and shape the mixture on the prepared surface in a uniform layer with no segregation of size, and to a loose depth that will provide the required compacted thickness.

Do not place in layers exceeding 6 inches in compacted thickness for aggregate base and surface courses or twice the maximum particle size for screened aggregate. When more than one layer is necessary, compact each layer according to Subsection 322.05 before placing the next layer. Route hauling and leveling equipment uniformly over the full width.

When placing aggregate over geotextile, place aggregate in a single lift to the full depth specified.

322.05 Compacting. Compact each layer full width. Roll from the sides to the center, parallel to the centerline of the road. Along curbs, headers, walls, and all places not accessible to the roller, compact the material with approved tampers or compactors.

Compact the aggregate using one of the following methods as specified:

Compaction A. Operating spreading and hauling equipment over the full width of the travelway.

Compaction B. Operate rollers and compact as specified in Subsection 204.11(a)(1).

Compaction C. Moisten or dry the aggregate to a uniform moisture content between 5 and 7 percent based on total dry weight of the mixture. Operate rollers and compact as specified in Subsection 204.11(a)(1).

Compaction D. Compact to a density of at least 95 percent of the maximum density, as determined by AASHTO T 99, method C or D.

Compaction E. Compact to a density of at least 96 percent of the maximum density, as determined by the Modified Marshall Hammer Compaction Method (available upon request from USDA Forest Service, Regional Materials Engineering Center, P.O. Box 7669, Missoula, MT 59807).

Compaction F. Compact to a density of at least 95 per-cent of the maximum density, as determined by AASHTO T 180, method C or D.

Compaction G. Compact to a density of at least 100 percent of the maximum density as determined by the Modified Marshall Hammer Compaction Method (available upon request from USDA Forest Service, Regional Materials Engineering Center, P.O. Box 7669, Missoula, MT 59807).

For all compaction methods, blade the surface of each layer during the compaction operations to remove irregularities and produce a smooth, even surface. When a density requirement is specified, determine the in place density and moisture content according to AASHTO T 310 or other approved test procedures.

.2.06 Construction Tolerance. If grade finishing stakes are required, finish the surface to within ±0.10 feet from staked line and grade elevation.

grade finishing stakes are not required, shape the surface to the required template and check the surface with a 10-foot straightedge. Defective areas are surface deviations in excess of 1/2 inch in 10 feet between any two contacts of the straightedge with the surface.

Correct all defective areas by loosening the material, adding or removing material, reshaping, and compacting.

Ensure that the compacted thickness is not consistently above or below the specified thickness. The maximum variation from the compacted specified thickness is ½ inch.

Ensure that the compacted width is not consistently above the specified width. The maximum variation from the specified width will not exceed +12 inches at any point.

322.07 Maintenance. Maintain the aggregate course to the correct line, grade, and cross-section by blading, watering, rolling, or any combination thereof until placement of the next course. Correct all defects according to Subsection 322.06.

322.08 Acceptance. See Table 322-1 or Table 322-2 as applicable, for sampling and testing requirements.

Aggregate gradation and surface course plasticity index will be evaluated under Subsection 106.04. If the aggregate is obtained from a Government stockpile then the above characteristics will be evaluated under Subsection 106.02. Other aggregate quality properties will be evaluated under Subsections 106.02 and 106.04. Placement of aggregate courses will be evaluated under Subsections 106.02 and 106.04.

The allowable upper and lower aggregate gradation limits are the Target Value plus or minus the allowable deviations shown in Tables 703-2 and 703-3.

The allowable upper and lower Plasticity index limits for surface courses are stated in 703.05(b).

Preparation of the surface on which the aggregate course is placed will be evaluated under Section 204 or 303 as applicable.

Measurement

322.09 Measure the Section 322 items listed in the bid schedule according to Subsection 109.02 and the following as applicable.

Measure square yard width horizontally to include the top of aggregate width including designed widening. Measure the square yard length horizontally along the centerline of the roadway.

If the measurement for aggregate is by cubic yard using contract quantities then measure aggregate by the cubic yard in-place once compacted, otherwise measurement for aggregate by the cubic yard is measured by the cubic yard in the hauling vehicle.

Measure thickness perpendicular to the grade of the travelway.

Measure width perpendicular to the centerline.

Payment

322.10 The accepted quantities will be paid at the contract price per unit of measurement for the Section 322 pay items listed in the bid schedule. Payment will be full compensation for the work prescribed in this Section. See Subsection 109.05.

Table 322-1
Sampling and Testing Requirements

Material or Product	Type of Acceptance (Subsection)	Characteristic	Category	Test Methods Specifications	Sampling Frequency	Point of Sampling	Split Sample	Reporting Time
Aggregate source quality 703.05	Measured and tested for conformance (106.04 & 105)	LA abrasion (coarse)	—	AASHTO T 96	1 per type & source of material	Source of material	Yes, when requested	Before using in work
		Sodium sulfate soundness loss (coarse & fine)	—	AASHTO T 104	"	"	"	"
		Durability index (coarse & fine)	—	AASHTO T 210	"	"	"	"
		Fractured faces	—	ASTM D 5821	"	"	"	"
Subbase, Base, and Surface courses	Measured and tested for conformance (106.04)	Sample	—	AASHTO T 2	2 per day	From windrow or roadbed after processing or from approved crusher sampling device	Yes	48 hours

Table 322-1 (continued)
Sampling and Testing Requirements

Material or Product	Type of Acceptance (Subsection)	Characteristic	Category	Test Methods Specifications	Sampling Frequency	Point of Sampling	Split Sample	Reporting Time
Subbase, Base, and Surface	Measured and tested for conformance (106.04)	Moisture-density Method D	—	AASHTO T 99 (1)	1 per type and source of material	Source of material	Yes, when requested	Before using in work
		Moisture-density Method E	—	R-1 Marshall	"	"	"	"
		Moisture-density Method F	—	AASHTO T 180(1)	"	"	"	"
		Moisture-density Method G	—	R-1 Marshall	"	"	"	"
		In-place density & moisture content	—	AASHTO T 310 or other approved procedures	3 per day	In-place	—	Before placing next layer

(1) Minimum of 5 points per proctor.

Table 322-2
Sampling and Testing Requirements

Material or Product	Type of Acceptance (Subsection)	Characteristic	Category	Test Methods Specifications	Sampling Frequency	Point of Sampling	Split Sample	Reporting Time
Screened Aggregate	Measured and tested for conformance (106.04)	Sample	—	AASHTO T 2	2 per day	From windrow or roadbed after processing or from approved crusher sampling device	Yes	48 hours

602 - Culverts and Drains

602.03_nat_us_09_06_2005

602.03 General.

Add the following:

Ensure that the final installed alignment of all pipe allows no reverse grades, and does not permit horizontal and vertical alignments to vary from a straight line drawn from center of inlet to center of outlet by more than 2 percent of pipe center length or 1.0 feet, whichever is less.

602.03_0618_us_03_26_2007

602.03 General

Add the following:

Clean and paint damaged coating caused by welding, field cutting, or handling in accordance with AASHTO M 36M and ASTM A 849.

635 - Temporary Traffic Control

635.03_nat_us_05_13_2004

635.03 General.

Add the following:

Install temporary traffic control signs to temporary posts or approved temporary sign mounts.

703 - Aggregate

703.05_nat_us_08_14_2009

Delete 703.05 and replace with the following:

703.05 Subbase, Base, Surface Course, and Screened Aggregate.

(a) Subbase or base aggregate. Furnish hard, durable particles or fragments of crushed stone, crushed slag, or crushed gravel conforming the following:

(1) Gradation	Table 703-2
(2) Liquid limit, AASHTO T 89	25 max.
(3) Plastic limit, AASHTO T 90	Nonplastic
(4) Los Angeles abrasion, AASHTO T 96	40% max.
(5) Sodium sulfate soundness loss (5 cycles), AASHTO T 104	12% max.
(6) Durability index (coarse), AASHTO T 210	35 min.
(7) Durability index (fine), AASHTO T 210	35 min.
(8) Fractured faces, ASTM D 5821	50% min.
(9) Free from organic matter and lumps or balls of clay	

Do not use material that breaks up when alternately frozen and thawed or wetted and dried.

Obtain the aggregate gradation by crushing, screening, and blending processes as necessary. Fine aggregate, material passing the No. 4 sieve, shall consist of natural or crushed sand and fine mineral particles.

(b) Surface course aggregate. Furnish hard, durable particles or fragments of crushed stone, crushed slag, or crushed gravel conforming the following:

(1) Gradation	Table 703-3
(2) Liquid limit, AASHTO T 89	35 max.
(3) Plastic Index, AASHTO T 90	
a) If the percent passing the No. 200 sieve is less than 12%	2 to 9
b) If the percent passing the No. 200 sieve is greater than 12%	Less than 2
(4) Los Angeles abrasion, AASHTO T 96	40% max.
(5) Sodium sulfate soundness loss (5 cycles), AASHTO T 104	12% max.
(6) Durability index (coarse), AASHTO T 210	35 min.
(7) Durability index (fine), AASHTO T 210	35 min.
(8) Fractured faces, ASTM D 5821	75% min.
(9) Free from organic matter and lumps or balls of clay	

Do not use material that breaks up when alternately frozen and thawed or wetted and dried.

Do not furnish material that contains asbestos fibers.

Obtain the aggregate gradation by crushing, screening, and blending processes as necessary. Fine aggregate, material passing the No. 4 sieve, shall consist of natural or crushed sand and fine mineral particles.

(c) Screened aggregate – Furnish hard, durable particles or fragments of stone, slag, or gravel conforming the following:

(1) Gradation	Table 703-16
(2) Plastic Index, AASHTO T 90	Less than 9
(3) Los Angeles abrasion, AASHTO T 96	55% max.
(4) Free from organic matter and lumps or balls of clay.	

Do not use material that breaks up when alternately frozen and thawed or wetted and dried.

Obtain the aggregate gradation by crushing, screening, and blending processes as necessary.

Delete Table 703-2 and replace with the following:

Table 703-2
Target Value Ranges for Subbase and Base Gradation

Sieve Size	Percent by Mass Passing Designated Sieve (AASHTO T 27 and T 11)				
	Grading Designation				
	A (Subbase)	B (Subbase)	C (Base)	D (Base)	E (Base)
2½ inch	100				
2 inch	97 – 100	100	100		
1½ inch		97 – 100			
1 inch	65 – 79 (6)		80 – 100 (6)	100	
3/4 inch			64 – 94 (6)	86 – 100 (6)	100
1/2 inch	45 – 59 (7)				
3/8 inch			40 – 69 (6)	51 – 82 (6)	62 – 90 (6)
No. 4	28 – 42 (6)	40 – 60 (8)	31 – 54 (6)	36 – 64 (6)	36 – 74 (6)
No. 40	9 – 17 (4)			12 – 26 (4)	12 – 26 (4)
No. 200	4.0 – 8.0 (3)	4.0 – 12.0 (4)	4.0 –7.0 (3)	4.0 – 7.0 (3)	4.0 – 7.0 (3)

( ) The value in the parentheses is the allowable deviation (±) from the target values..

Delete Table 703-3 and replace with the following:

Table 703-3
Target Value Ranges for Surface Gradation

Sieve Size	Percent by Mass Passing Designated Sieve (AASHTO T 27 and T 11)					
	Grading Designation					
	F	G	H	S	T	U
1 1/2 inch	100			100		
1 inch	97-100	100		72 – 92 (6)	100	
3/4 inch	76-89 (6)	97 - 100	97 - 100			100
1/2 inch					71 – 91 (6)	
3/8 inch	56-68 (6)	70 – 80 (6)	80 – 92 (6)	51 – 71 (6)		71 – 90 (6)
No. 4	43-53 (7)	51 – 63 (7)	58 – 70 (7)	36 – 53 (7)	43 – 60 (7)	50 – 68 (7)
No. 8				26 – 40 (6)	30 – 46 (6)	34 – 51 (6)
No. 16	23-32 (6)	28 – 39 (6)	28 – 40 (6)			
No. 40	15-23 (5)	19 – 27 (5)	16 – 26 (5)	14 – 25 (5)	16 – 28 (5)	19 – 30 (5)
No. 200	10.0-16.0 (4)	10.0 – 16.0 (4)	9.0 – 14.0 (4)	8.0 – 15.0 (4)	8.0 – 15.0 (4)	8.0 – 15.0 (4)

( ) The value in the parentheses is the allowable deviation (±) from the target values.
If the plasticity index (PI) is greater than 0, the TV range for the No. 200 sieve size is 8-12 (4).

Add Table 703-16:

Table 703-16

Gradation Requirements for Screened Aggregate

Sieve Size	Percent by Mass Passing Designated Sieve (AASHTO T 27 and T 11)						
	Grading Designation						
	L	M	N	O	P	Q	R
6 inch	100	100					
4 inch			100	100			
3 inch					100	100	
2 inch							100
No. 4		15-45		15-45		15-45	

704 - Soil

704.02_nat_us_03_02_2005

704.02 Bedding Material.

Delete Subsection 704.02 and substitute the following:

Furnish a well graded, free draining material free of excess moisture, muck, frozen lumps, roots, sod, or other deleterious material conforming to the following:

(a) Maximum particle size	3 inch or half the corrugation depth, whichever is smaller
(b) Material passing No. 200 sieve, AASHTO T 27 and T 11	10% max.

714 - Geotextile and Geocomposite Drain Material

714.03_nat_us_02_25_2005

Tables 714-1 and 714-4.

Add the following note to both tables:

(4) Woven slit film will not be allowed.

718 - Traffic Signing and Marking Material

718.05_nat_us_08_05_2009

718.05 Aluminum Panels

Delete the third paragraph and replace with the following:
Clean, degrease and properly prepare the panels according to methods recommended by the sheeting manufacturer. Conversion coatings will conform to ASTM B-921 or ASTM B-449.

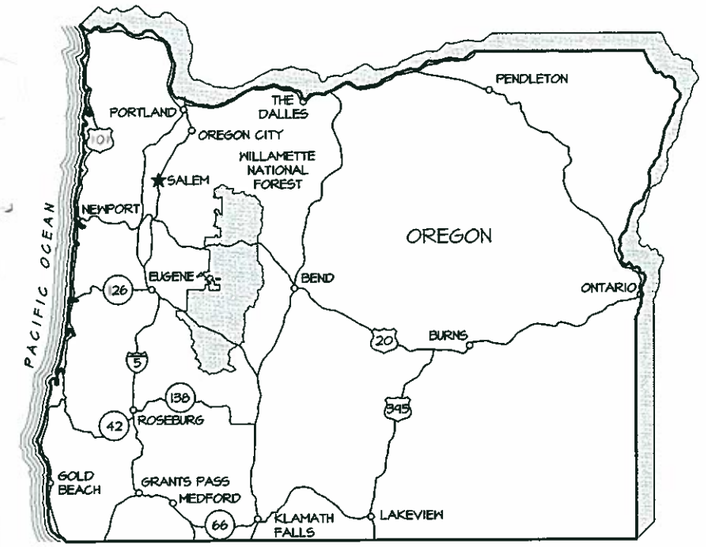

STATE MAP

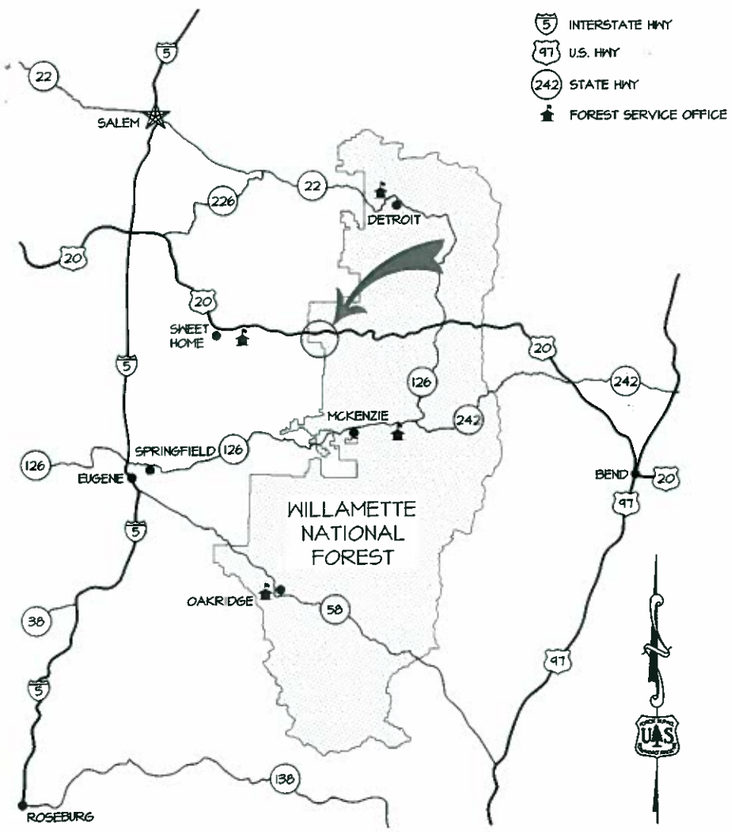

PROJECT LOCATION MAP

UNITED STATES DEPARTMENT OF AGRICULTURE
FOREST SERVICE

WILLAMETTE NATIONAL FOREST

PACIFIC NORTHWEST REGION
SWEET HOME RANGER DISTRICT
LINN COUNTY

RECONSTRUCTION PLANS FOR:

FALL THIN SPECIFIED ROADS

ROADS TO BE RECONSTRUCTED:

NFSR #	ROAD NAME	LENGTH
2032417	FALLS CREEK RD	3.20 Mi.
2032428	NO NAME	1.12 Mi.
2032430	NO NAME	0.29 Mi.

SHEET #	DESCRIPTION
1	TITLE
2	VICINITY MAP
3	ESTIMATE OF QUANTITIES
4-7	DESCRIPTION OF WORK
8	GENERAL NOTES
9	NFSR #2032430 STA. 7+80
10	CULVERT BEDDING & BACKFILL TYPICALS
11	CULVERT AGGREGATE & DITCH TYPICALS
12	DEWATERING TYPICALS
13	SOIL EROSION & POLLUTION CONTROL
14	TEMPORARY TRAFFIC CONTROL TYPICALS

DESIGNED BY: Carlos Velez - Project Engineer	11/16/11 Date
REVIEWED BY: Michael Howard Designated Reviewer	11/16/2011 Date
REVIEWED BY: Ken Robertson Assistant Development Engineer	11/21/2011 Date
RECOMMENDED BY: Paul Bennett Zone Engineer	11/16/11 Date
APPROVED BY: Cynthia Glick District Ranger	12/8/11 Date
APPROVED BY: Forest Engineer	12/15/11 Date

INTENDED TO BE PRINTED ON 11" X 17"

FALL THIN SPECIFIED ROADS

TITLE

R6 - PACIFIC NORTHWEST REGION

U.S.D.A. FOREST SERVICE

SHEET NUMBER	TOTAL SHEETS
1	14

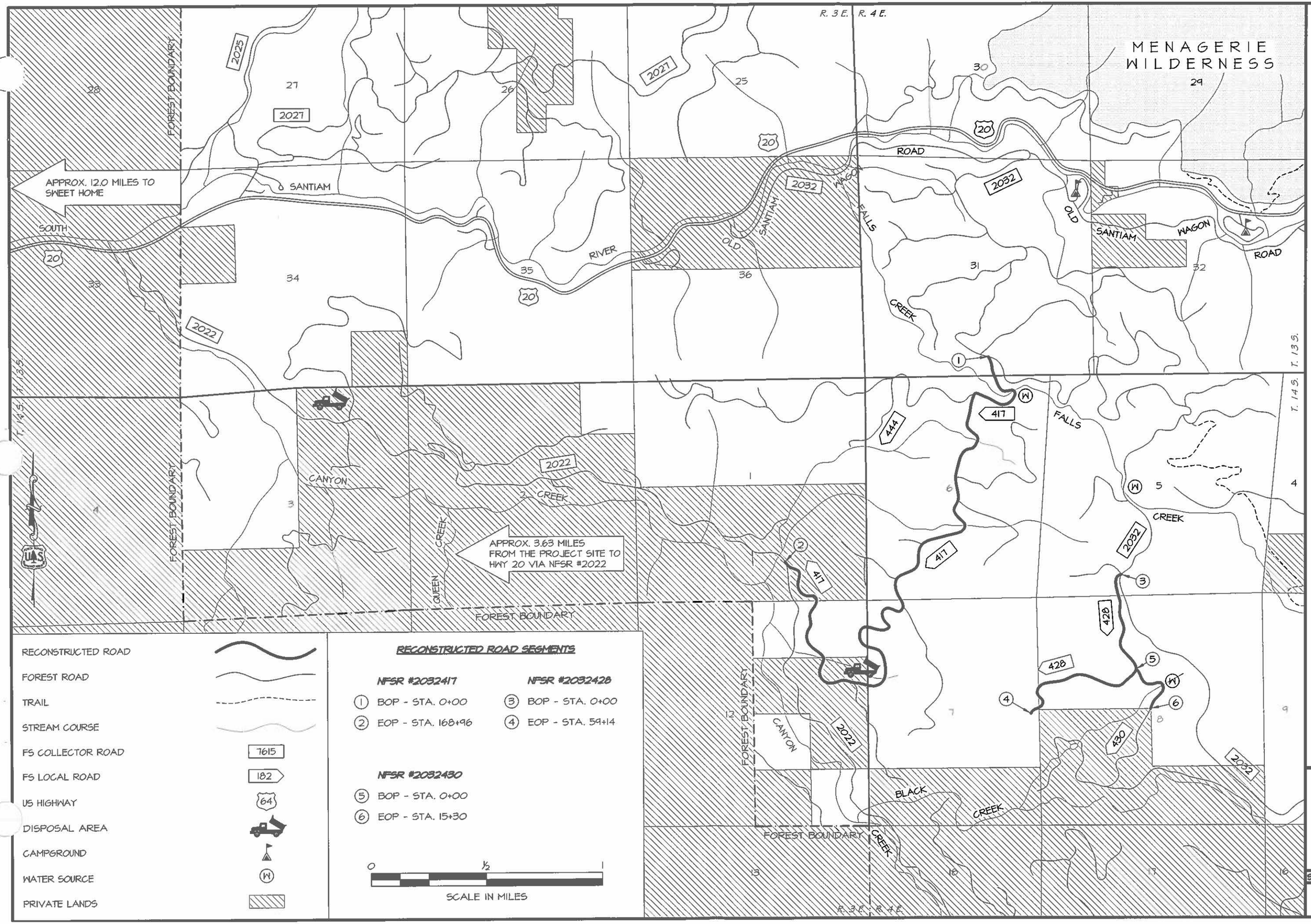

RECONSTRUCTED ROAD
FOREST ROAD
TRAIL
STREAM COURSE
FS COLLECTOR ROAD 7615
FS LOCAL ROAD 182
US HIGHWAY 64
DISPOSAL AREA
CAMPGROUND
WATER SOURCE
PRIVATE LANDS

RECONSTRUCTED ROAD SEGMENTS

NFSR #2032417

1. BOP - STA. 0+00
2. EOP - STA. 168+96

NFSR #2032428

3. BOP - STA. 0+00
4. EOP - STA. 59+14

NFSR #2032430

5. BOP - STA. 0+00
6. EOP - STA. 15+30

0 ½ 1
SCALE IN MILES

FALL THIN SPECIFIED ROADS

VICINITY MAP

R6 - PACIFIC NORTHWEST REGION

U.S.D.A. FOREST SERVICE

SHEET NUMBER	TOTAL SHEETS
2	14

ESTIMATE OF QUANTITIES

Pay Item Number	Pay Item Description	Unit	Road Number: 2032417	2032428	2032430	-	-	" * " Denotes Contract Quantity Pay Item
			Quantities					Remarks
15101	Mobilization	Lump Sum	ALL	0	0			Applicable to All Roads. Includes Fire Equipment and Equipment Washing.
15713	Soil Erosion & Pollution Control	Lump Sum	ALL	0	0			Applicable to All Disturbed Areas Within the Entire Project Site.
15755	Dewatering Structure	Lump Sum	0	0	ALL			Applicable to All Culverts Within the Entire Project Area.
20301	Removal of Culvert, Disposal Method A	Each	14	3	1			Remove From National Forest Lands.
20701*	Earthwork Geotextile, Type IV(B)	Square Yard	191.0	0	42.0			
25104*	Keyed Riprap, Class 4	Cubic Yard	50	0	21			Commercial Source.
32207*	Subbase, Grading B, Compaction Method B	Cubic Yard	140	30	15			Commercial Source.
60263A	24-inch Aluminized Steel, Type 2, Corrugated Steel Pipe, 0.109 inch Thickness, Method B	Foot	456	100	0			Furnish w/ Annular Bands. Helical and Dimple Bands not Allowed.
60263B	36-inch Aluminized Steel, Type 2, Corrugated Steel Pipe, 0.109 inch Thickness, Method B	Foot	0	0	40			Furnish w/ Annular Bands. Helical and Dimple Bands not Allowed.
63501	Temporary Traffic Control	Lump Sum	ALL	0	0			Applicable to All Roads. Includes All Necessary Labor and Materials.

FALL THIN SPECIFIED ROADS

ESTIMATE OF QUANTITIES

U.S.D.A. FOREST SERVICE

R6 - PACIFIC NORTHWEST REGION

SHEET NUMBER	TOTAL SHEETS
3	14

NFSR #2032417 - Falls Creek Rd

QUANTITIES

FP-03 PAY ITEMS

"*" DENOTES CONTRACT QUANTITY
PAY ITEM

Station Begin	Station End	Description of Work	Mobilization	Soil Erosion & Pollution Control	Dewatering Structure	Removal of Culvert, Disposal Method A	Earthwork Geotextile, Type IV(B)	Keyed Riprap, Class 4	Subbase, Grading B, Compaction Method B	24-inch Aluminized Steel, Type 2, Corrugated Steel Pipe, 0.109 inch Thickness, Method B	36-inch Aluminized Steel, Type 2, Corrugated Steel Pipe, 0.109 inch Thickness, Method B	Temporary Traffic Control	As Built
			15101	15713	15755	20301	20701*	25104*	32207*	60263A	60263B	63501	
		Unit of Measure:	LS	LS	LS	EA	SY	CY	CY	FT	FT	LS	
			X - Signifies LS Quantity Designated as ALL										
0+00		B.O.P. NFSR #2032417 Intersection w/ NFSR #2032000	X	X								X	
1+24		Remove Existing 18" CMP, Install 24"x30' CMP, Place Riprap Outlet Protection, 6' L x 4' W x 2' Deep w/ Geotextile Fabric, See Sheet #11 Place Aggregate Base, 6" Thickness				1	9.0	2	10	30			
		NOTE: Install at Existing Grade and Skew Unless Otherwise Directed by Contracting Officer.											
4+38		Remove Existing 18" CMP, Install 24"x40' CMP, Place Riprap Outlet Protection, 6' L x 4' W x 2' Deep w/ Geotextile Fabric, See Sheet #11 Place Aggregate Base, 6" Thickness				1	9.0	2	10	40			
		NOTE: Install at Existing Grade and Skew Unless Otherwise Directed by Contracting Officer.											
8+10		Remove Existing 18" CMP, Install 24"x30' CMP, Place Riprap Fill Slope Protection, 10' L1 x 6' L2 x 10' H x 2' Thickness w/ Geotextile Fabric, See Sheet #10 Place Aggregate Base, 6" Thickness				1	22.0	6	10	30			
		NOTE: Install at Existing Grade and Skew Unless Otherwise Directed by Contracting Officer.											
16+22		Remove Existing 18" CMP, Install 24"x30' CMP, Place Riprap Outlet Protection, 6' L x 4' W x 2' Deep w/ Geotextile Fabric, See Sheet #11 Place Aggregate Base, 6" Thickness				1	9.0	2	10	30			
		NOTE: Install at Existing Grade and Skew Unless otherwise directed by Contracting Officer.											
25+50		Intersection w/ Rd Rt - NFSR #2032418											
29+30		Remove Existing 18" CMP, Install 24"x36' CMP, Place Riprap Outlet Protection, 6' L x 4' W x 2' Deep w/ Geotextile Fabric, See Sheet #11 Place Aggregate Base, 6" Thickness				1	9.0	2	10	36			
		NOTE: Install at Existing Grade and Skew Unless otherwise directed by Contracting Officer.											
44+10		Remove Existing 18" CMP, Install 24"x30' CMP, Place Riprap Outlet Protection, 6' L x 4' W x 2' Deep w/ Geotextile Fabric, See Sheet #11 Place Aggregate Base, 6" Thickness				1	9.0	2	10	30			
		NOTE: Install at Existing Grade and Skew Unless Otherwise Directed by Contracting Officer.											
48+50		Intersection w/ Rd Rt - NFSR #2032420											
53+00		Intersection w/ Rd Lt - NFSR #2032422											
54+22		Remove Existing 18" CMP, Install 24"x40' CMP, Place Riprap Outlet Protection, 6' L x 4' W x 2' Deep w/ Geotextile Fabric, See Sheet #11 Place Aggregate Base, 6" Thickness				1	9.0	2	10	40			
		NOTE: Lower Outlet 4' & Install at Existing and Skew Unless Otherwise Directed by Contracting Officer.											

FALL THIN SPECIFIED ROADS

DESCRIPTION OF WORK NFSR #2032417

U.S.D.A. FOREST SERVICE

R6 - PACIFIC NORTHWEST REGION

SHEET NUMBER	TOTAL SHEETS
4	14

NFSR #2032417 - Falls Creek Rd

QUANTITIES

FP-03 PAY ITEMS

"*" DENOTES CONTRACT QUANTITY PAY ITEM

Station Begin	Station End	Description of Work	Mobilization	Soil Erosion & Pollution Control	Dewatering Structure	Removal of Culvert, Disposal Method A	Earthwork, Geotextile, Type IV(B)	Keyed Riprap, Class 4	Subbase, Grading B, Compaction Method B	24-inch Aluminized Steel, Type 2, Corrugated Steel Pipe, 0.109 Inch Thickness, Method B	36-inch Aluminized Steel, Type 2, Corrugated Steel Pipe, 0.109 Inch Thickness, Method B	Temporary Traffic Control	As Built
			15101	15713	15755	20301	20701*	25104*	32207*	60263A	60263B	63501	
		Unit of Measure:	LS	LS	LS	EA	SY	CY	CY	FT	FT	LS	
			X - Signifies LS Quantity Designated as ALL										
64+40		Remove Existing 18" CMP, Install 24"x24' CMP, Place Riprap Outlet Protection, 6' L x 4' W x 2' Deep w/ Geotextile Fabric, See Sheet #11 Place Aggregate Base, 6" Thickness				1	9.0	2	10	24			
			NOTE: Install at Existing Grade and Skew Unless Otherwise Directed by Contracting Officer.										
66+80		Remove Existing 18" CMP, Install 24"x30' CMP, Place Riprap Outlet Protection, 6' L x 4' W x 2' Deep w/ Geotextile Fabric, See Sheet #11 Place Aggregate Base, 6" Thickness				1	9.0	2	10	30			
			NOTE: Install at Existing Grade and Skew Unless Otherwise Directed by Contracting Officer.										
88+10		Intersection w/ Rd Lt - NFSR #2032429											
111+46		Remove Existing 18" CMP, Install 24"x30' CMP, Place Riprap Outlet Protection, 6' L x 4' W x 2' Deep w/ Geotextile Fabric, See Sheet #11 Place Aggregate Base, 6" Thickness				1	9.0	2	10	30			
			NOTE: Install at Existing Grade and Skew Unless Otherwise Directed by Contracting Officer.										
113+00		Remove Existing 24" CMP, Install 24"x40' CMP, Place Riprap Outlet Protection, 6' L x 4' W x 2' Deep w/ Geotextile Fabric, See Sheet #11 Place Aggregate Base, 6" Thickness				1	9.0	2	10	40			
			NOTE: Lower Outlet 2' & Install at Existing and Skew Unless Otherwise Directed by Contracting Officer.										
126+70		Disposal Area Rt											
127+40		Intersection w/ Rd Lt - NFSR #2032431											
149+20		Remove Existing 18" CMP, Install 24"x30' CMP, Place Riprap Fill Slope Protection, 12' L1 x 6' L2 x 15' H x 2' Thickness w/ Geotextile Fabric, See Sheet #10 Place Aggregate Base, 6" Thickness				1	34.0	10	10	30			
			NOTE: Install at Existing Grade and Skew Unless Otherwise Directed by Contracting Officer.										
155+10		Remove Existing 24" CMP, Install 24"x30' CMP, Place Riprap Fill Slope Protection, 15' L1 x 10' L2 x 6' H x 4' Thickness w/ Geotextile Fabric, See Sheet #10 Place Aggregate Base, 6" Thickness				1	36.0	12	10	30			
			NOTE: Install at Existing Grade and Skew Unless Otherwise Directed by Contracting Officer.										
162+66		Remove Existing 18" CMP, Install 24"x36' CMP, Place Riprap Outlet Protection, 6' L x 4' W x 2' Deep w/ Geotextile Fabric, See Sheet #11 Place Aggregate Base, 6" Thickness				1	9.0	2	10	36			
			NOTE: Install at Existing Grade and Skew Unless Otherwise Directed by Contracting Officer.										
	168+96	E.O.P. NFSR #2032417											
		NFSR #2032417 Total:	ALL	ALL	0	14	191.0	50	140	456	0	ALL	

FALL THIN SPECIFIED ROADS

DESCRIPTION OF WORK NFSR #2032417

U.S.D.A. FOREST SERVICE

R6 - PACIFIC NORTHWEST REGION

SHEET NUMBER	TOTAL SHEETS
5	14

NFSR #2032428 - No Name

QUANTITIES

FP-03 PAY ITEMS

"*" DENOTES CONTRACT QUANTITY PAY ITEM

Station Begin	Station End	Description of Work	Mobilization	Soil Erosion & Pollution Control	Dewatering Structure	Removal of Culvert, Disposal Method A	Earthwork Geotextile, Type IV(B)	Keyed Riprap, Class 4	Subbase, Grading B, Compaction Method B	24-Inch Aluminized Steel, Type 2, Corrugated Steel Pipe, 0.104 Inch Thickness, Method B	36-Inch Aluminized Steel, Type 2, Corrugated Steel Pipe, 0.104 Inch Thickness, Method B	Temporary Traffic Control	As Built
			15101	15713	15755	20301	20701*	25104*	32207*	60263A	60263B	63501	
		Unit of Measure:	LS	LS	LS	EA	SY	CY	CY	FT	FT	LS	
			X - Signifies LS Quantity Designated as ALL										
0+00		B.O.P. NFSR #2032428 Intersection w/ NFSR #2032000											
2+50		Remove Existing 18" CMP, Install 24"x30' CMP, Place Aggregate Base, 6" Thickness				1			10	30			
			NOTE: Install at Existing Grade and Skew Unless Otherwise Directed by Contracting Officer.										
22+50		Remove Existing 18" CMP, Install 24"x30' CMP, Place Aggregate Base, 6" Thickness				1			10	30			
			NOTE: Install at Existing Grade and Skew Unless Otherwise Directed by Contracting Officer.										
23+30		Intersection w/ Rd Lt - NFSR #2032430											
40+80		Remove Existing 18" CMP, Install 24"x40' CMP, Place Aggregate Base, 6" Thickness				1			10	40			
			NOTE: Install at Existing Grade and Skew Unless Otherwise Directed by Contracting Officer.										
	59+14	E.O.P. NFSR #2032428											
		NFSR #2032428 Total:	0	0	0	3	0	0	30	100	0	0	

FALL THIN SPECIFIED ROADS

DESCRIPTION OF WORK NFSR #2032428

R6 - PACIFIC NORTHWEST REGION

U.S.D.A. FOREST SERVICE

SHEET NUMBER	TOTAL SHEETS
6	14

NFSR #2032430 - No Name

QUANTITIES

FP-03 PAY ITEMS

"*" DENOTES CONTRACT QUANTITY PAY ITEM

Station Begin	Station End	Description of Work	Mobilization	Soil Erosion & Pollution Control	Dewatering Structure	Removal of Culvert, Disposal Method A	Earthwork, Geotextile, Type IV(B)	Keyed Riprap, Class 4	Subbase, Grading B, Compaction Method B	24-inch Aluminized Steel, Type 2, Corrugated Steel Pipe, 0.109 Inch Thickness, Method B	36-inch Aluminized Steel, Type 2, Corrugated Steel Pipe, 0.109 Inch Thickness, Method B	Temporary Traffic Control	As Built
			15101	15713	15755	20301	20701*	25104*	32207*	60263A	60263B	63501	
		Unit of Measure:	LS	LS	LS	EA	SY	CY	CY	FT	FT	LS	
			X - Signifies LS Quantity Designated as ALL										
0+00		B.O.P. NFSR #2032430 Intersection w/ NFSR #2032428											
7+80		Remove Existing 36" CMP, Install 36"x40' CMP, See Detail Sheet #9			X	1	42.0	21	15		40		
			NOTE: Lower Entire Pipe 1' at Existing Grade and Skew Unless Otherwise Directed by Contracting Officer.										
	15+30	E.O.P. NFSR #2032430											
		NFSR #2032428 Total:	0	0	ALL	1	42.0	21	15	0	40	0	

FALL THIN SPECIFIED ROADS

DESCRIPTION OF WORK NFSR #2032430

R6 - PACIFIC NORTHWEST REGION

U.S.D.A. FOREST SERVICE

SHEET NUMBER	TOTAL SHEETS
7	14

GENERAL NOTES:

1. CONSTRUCTION EQUIPMENT SHALL BE CONFINED TO THE ROADWAY, UNLESS OTHERWISE APPROVED BY THE CONTRACTING OFFICER.
2. UNSUITABLE WASTE MATERIAL PRODUCED IN THE CONSTRUCTION OF THIS PROJECT SHALL BE HAULED TO THE DESIGNATED DISPOSAL AREAS SHOWN ON THE VICINITY MAP. SHAPE AND COMPACT AREA TO DRAIN WITH SPREADING EQUIPMENT, AS APPROVED BY CONTRACTING OFFICER.
3. CONTRACTOR SHALL BE RESPONSIBLE FOR DIVERSION OF WATER ON ALL ROADS DURING CONSTRUCTION AS REQUIRED. REFER TO SHEET #12 FOR DEWATERING TYPICALS.
4. EACH CULVERT'S LOCATION, LENGTH AND SKEW SHALL BE FIELD VERIFIED BY THE CONTRACTOR AND APPROVED BY THE CONTRACTING OFFICER PRIOR TO ORDERING. SUBMIT A CULVERT LIST TO THE CONTRACTING OFFICER FOR APPROVAL.
5. CLEARING AND GRUBBING MAY BE ENCOUNTERED ON A LIMITED BASIS DURING CULVERT INSTALLATION. THIS WORK IS CONSIDERED TO BE INCIDENTAL TO CULVERT INSTALLATION AND NO SEPARATE PAYMENT WILL BE MADE. APPLICABLE DISPOSAL METHODS INCLUDE: DISPOSAL OF TOPS AND LIMBS L, LOGS 1, STUMPS F(1). REFER TO FSSS 201 - CLEARING AND GRUBBING.
6. CONSTRUCTION TOLERANCE CLASS D APPLICABLE TO ALL ROADS, REFER TO FSSS 204 - EXCAVATION AND EMBANKMENT.

ABBREVIATION LIST:

1. NFSR - NATIONAL FOREST SYSTEM ROAD
2. DOW - DESCRIPTION OF WORK
3. MTCE - MAINTENANCE
4. STA - STATION
5. BOP - BEGINNING OF PROJECT
6. EOP - END OF PROJECT
7. CMP - CORRUGATED METAL PIPE
8. CL - CENTERLINE
9. EXC - EXCAVATION
10. EMB - EMBANKMENT
11. BHC - BEGINNING OF HORIZONTAL CURVE
12. EHC - ENDING OF HORIZONTAL CURVE
13. BVC - BEGINNING OF VERTICAL CURVE
14. EVC - ENDING OF VERTICAL CURVE
15. V:H - RATIO OF VERTICAL TO HORIZONTAL UNITS
16. FSSS - FOREST SERVICE SUPPLEMENTAL SPECIFICATION

FALL THIN SPECIFIED ROADS

GENERAL NOTES

U.S.D.A. FOREST SERVICE

R6 - PACIFIC NORTHWEST REGION

SHEET NUMBER	TOTAL SHEETS
8	14

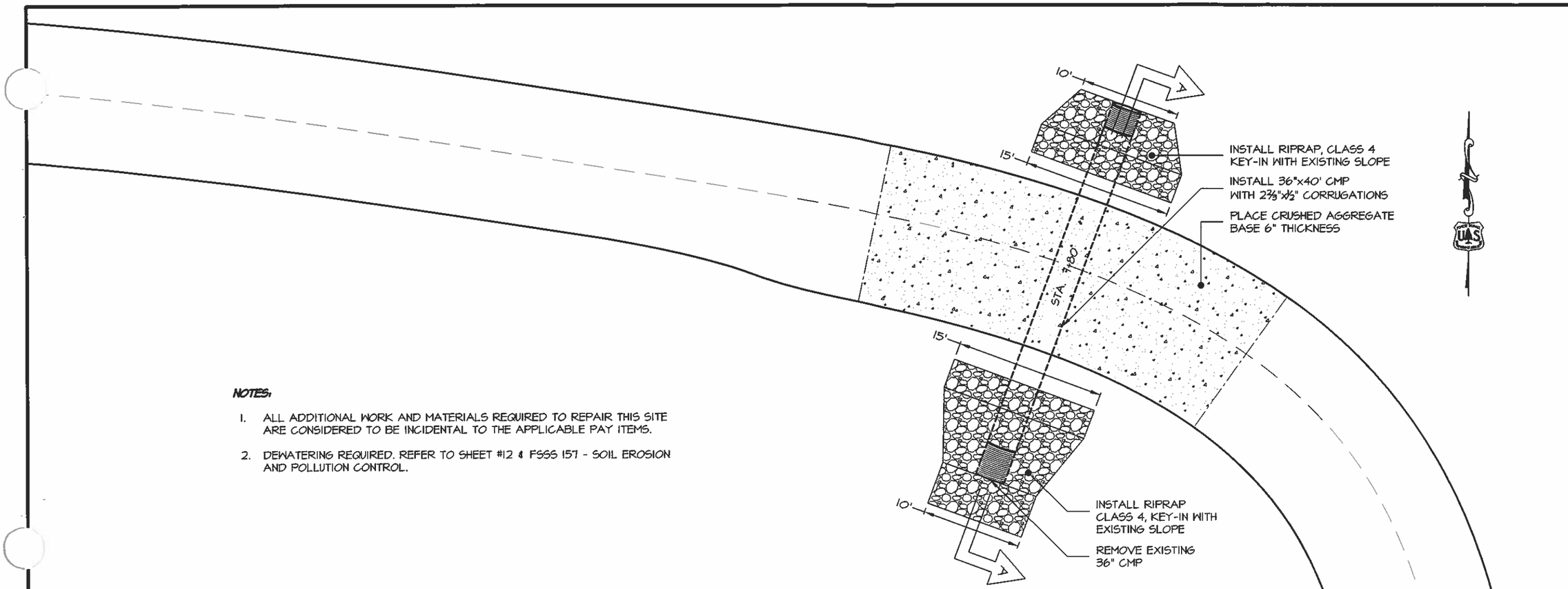

NOTES:

1. ALL ADDITIONAL WORK AND MATERIALS REQUIRED TO REPAIR THIS SITE ARE CONSIDERED TO BE INCIDENTAL TO THE APPLICABLE PAY ITEMS.
2. DEWATERING REQUIRED. REFER TO SHEET #12 & FSSS 157 - SOIL EROSION AND POLLUTION CONTROL.

PLAN VIEW

Not to Scale

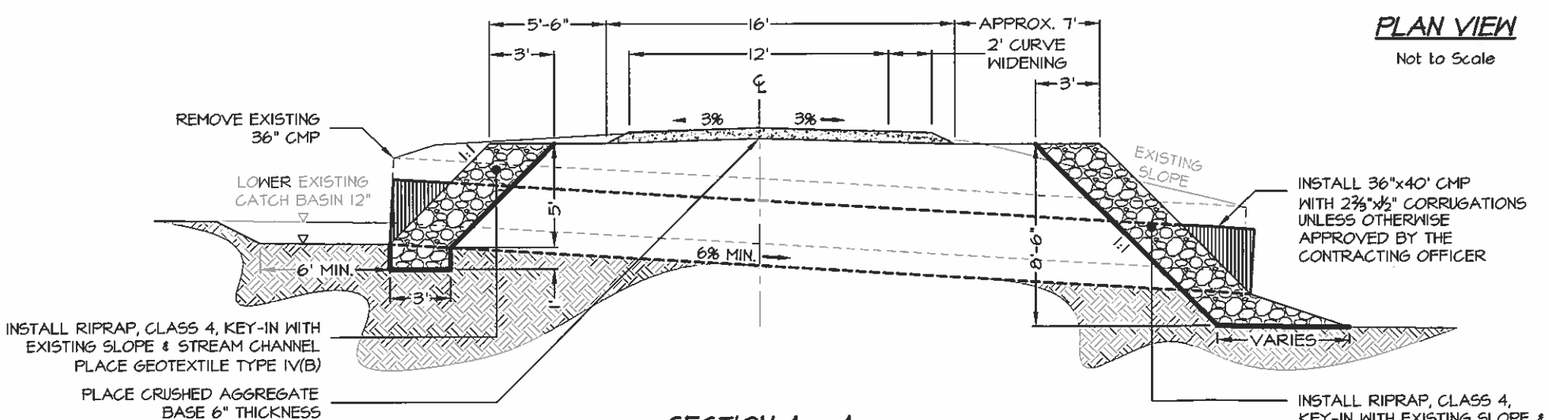

SECTION A - A

Not to Scale

NFSR #2032430 STA. 7+80

Not to Scale

FALL THIN SPECIFIED ROADS

NFSR #2032430 STA. 7+80

R6 - PACIFIC NORTHWEST REGION

U.S.D.A. FOREST SERVICE

SHEET NUMBER	TOTAL SHEETS
9	14

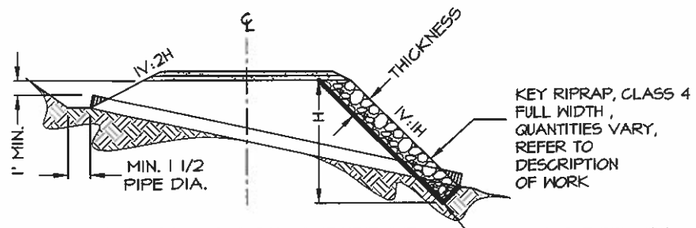

TYPICAL CLASS 4 RIPRAP FILL SLOPE PROTECTION SECTION VIEW

Not to Scale

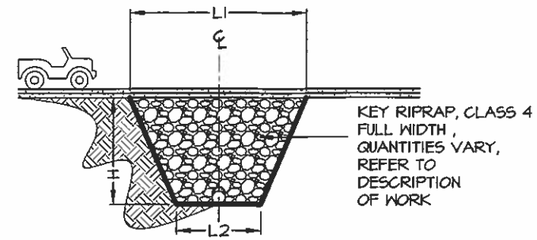

TYPICAL CLASS 4 RIPRAP FILL SLOPE PROTECTION PROFILE VIEW

Not to Scale

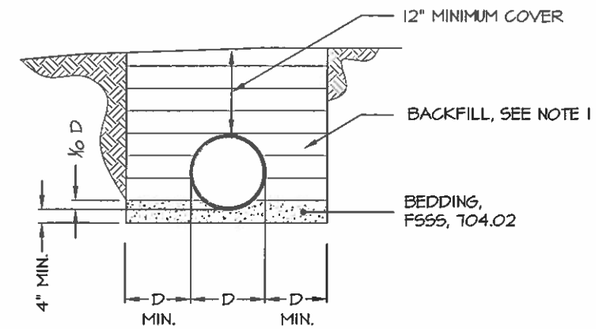

TYPICAL CMP ROUND CULVERT SECTION

Not to Scale

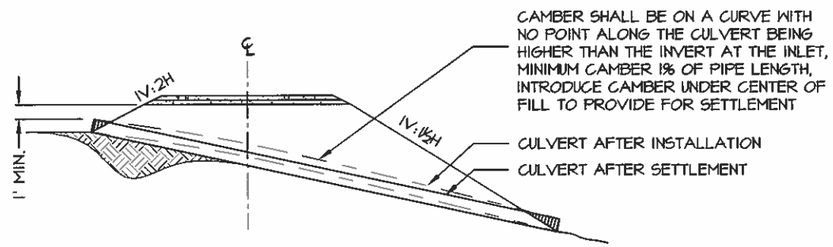

TYPICAL CAMBER CROSS SECTION VIEW

Not to Scale

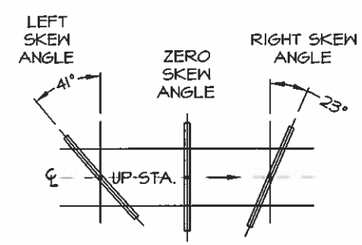

PLAN VIEW

TYPICAL CULVERT SKEW DIAGRAM

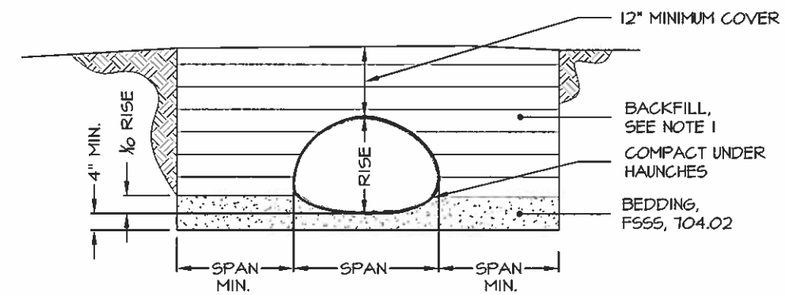

TYPICAL CMP ARCH CULVERT SECTION

Not to Scale

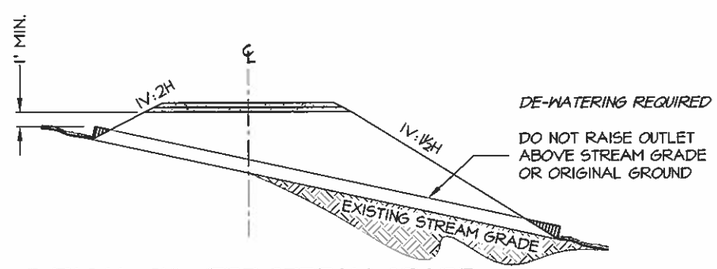

TYPICAL CULVERT STREAM GRADE INSTALLATION CROSS SECTION VIEW

Not to Scale

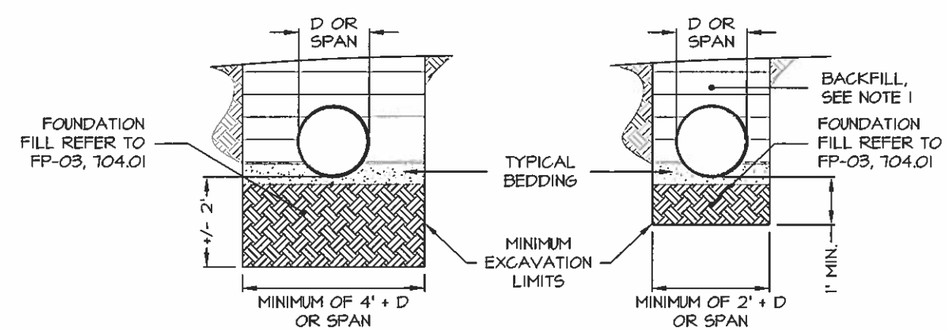

UNSUITABLE FOUNDATION

Not to Scale

ROCK FOUNDATION

Not to Scale

NOTES:

1. BACK FILL ALL CULVERTS WITH SUITABLE MATERIAL APPROVED BY THE CONTRACTING OFFICER. PLACE IN 6-INCH LAYERS, USING COMPACTION METHOD B, IN ACCORDANCE WITH FSSS 204.
2. REFER TO DESCRIPTION OF WORK FOR SLOPE PROTECTION LOCATIONS.
3. CAMBER ALL CULVERTS AS SHOWN IN CAMBER TYPICAL AND AS DIRECTED IN FSSS 602.03 WITH MAXIMUM CAMBER UNDER CENTER OF FILL.
4. PROVIDE FOR A 50' TRANSITION DITCH INTO INLET OF CULVERT.
5. ALL EXCAVATION AND TRENCHING OPERATIONS SHALL CONFORM TO OSHA REQUIREMENTS.
6. DO NOT OPERATE ANY HEAVY EQUIPMENT OVER ANY CULVERT UNTIL IT HAS BEEN PROPERLY BACK FILLED WITH A MINIMUM OF 1 FT COVER.
7. FIELD CUTTING OF CULVERT IS NOT PERMITTED UNLESS APPROVED BY THE CONTRACTING OFFICER. WHERE SPELTER COATING HAS BEEN BRUISED OR BROKEN IN THE SHOP, DURING SHIPPING, OR BY FIELD CUTTING, REPAIRS SHALL BE IN ACCORDANCE WITH AASHTO M36.
8. SOME INSTALLATIONS OF CULVERTS MAY REQUIRE ADDITIONAL EXCAVATION BELOW EXISTING CULVERT GRADE LINE.

CULVERT BEDDING & BACKFILL TYPICALS

Not to Scale

FALL THIN SPECIFIED ROADS

CULVERT BEDDING & BACKFILL TYPICALS

R6 - PACIFIC NORTHWEST REGION

U.S.D.A. FOREST SERVICE

SHEET NUMBER	TOTAL SHEETS
10	14

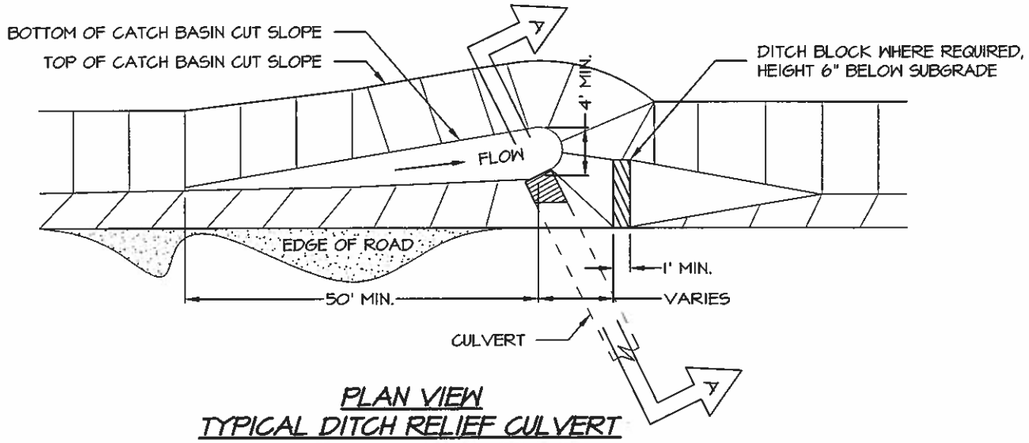

PLAN VIEW
TYPICAL DITCH RELIEF CULVERT

Not to Scale

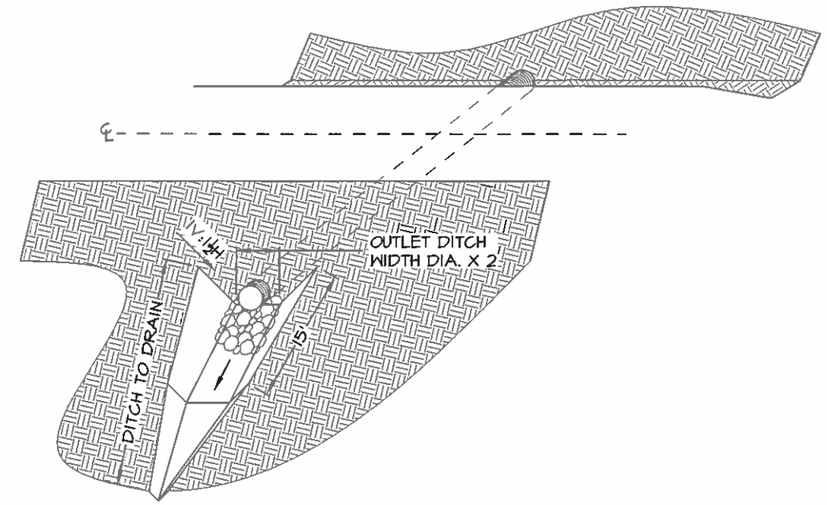

OUTLET "V" DITCH
PICTORIAL VIEW

Not to Scale

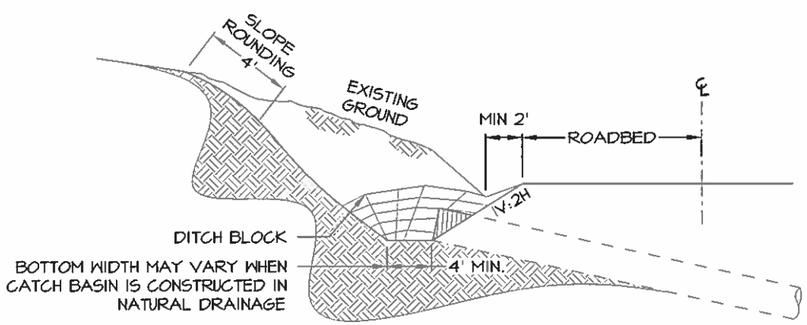

SECTION A - A
DITCH RELIEF CULVERT

Not to Scale

NOTES:

1. MATERIAL REMOVED IN THE MAINTENANCE, RECONDITIONING, AND CLEANING OF CATCH BASINS AND CULVERTS SHALL NOT BE DEPOSITED ON OR ABOVE CUT SLOPES. ALL MATERIAL SHALL BE HAULED TO DESIGNATED WASTE AREAS AND DISPOSED OF AS APPROVED BY THE CONTRACTING OFFICER.
2. APPLY OUTLET "V" DITCH ONLY AT CULVERT INSTALLATIONS WITH FILL SLOPES LESS THAN 1V:1½H AS APPROVED ON THE GROUND BY THE CONTRACTING OFFICER.

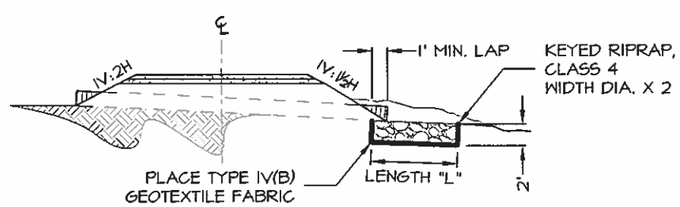

TYPICAL RIPRAP OUTLET SPLASH APRON
CROSS SECTION VIEW

Not to Scale

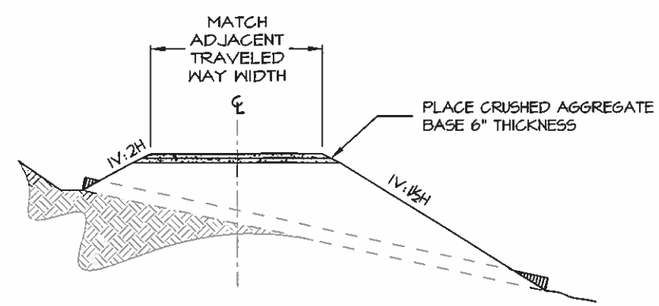

SECTION VIEW

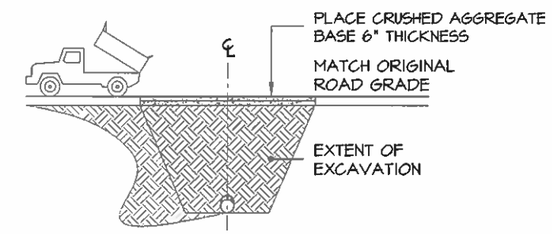

PROFILE VIEW

TYPICAL CULVERT
AGGREGATE REPLACEMENT

Not to Scale

CULVERT AGGREGATE & DITCH TYPICALS

Not to Scale

FALL THIN SPECIFIED ROADS

CULVERT AGGREGATE & DITCH TYPICALS

R6 - PACIFIC NORTHWEST REGION

U.S.D.A. FOREST SERVICE

SHEET NUMBER	TOTAL SHEETS
11	14

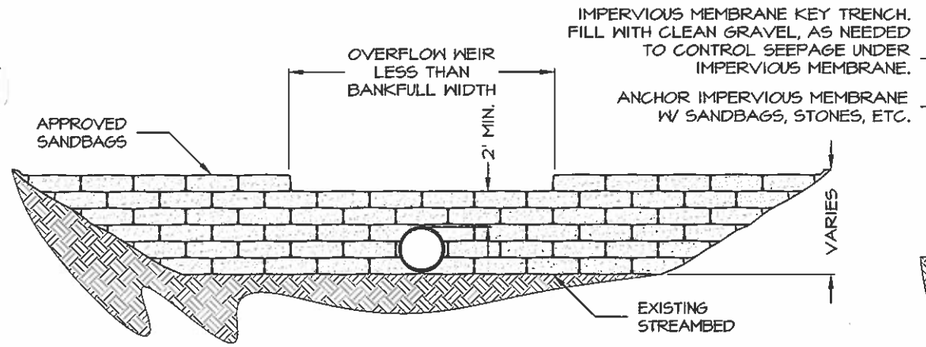

ELEVATION VIEW

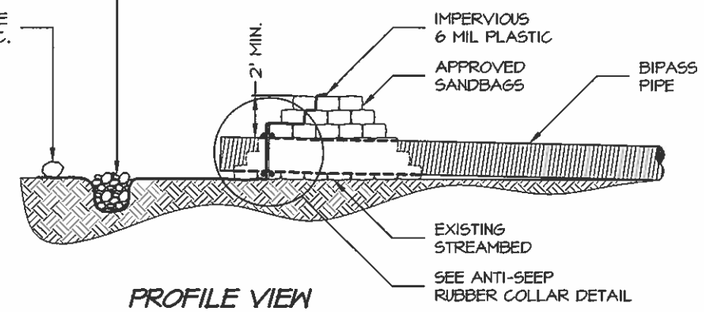

PROFILE VIEW

SANDBAG BYPASS DAM DETAILS

Not to Scale

NOTES:

1. THE DEWATERING & SEDIMENT CONTROL PLAN SHOWS THE MINIMUM ACCEPTABLE CRITERIA. MAINTAINING CLEAN WATER DOWNSTREAM OF THE PROJECT IS THE RESPONSIBILITY OF THE CONTRACTOR FOR THE DURATION OF THE PROJECT.
2. MAINTAIN PUMPING CAPACITY EQUAL TO STREAM FLOW, UNTIL THE STREAM IS FLOWING ON THE APPROVED, FINISHED STREAMBED.
3. REFER TO FSSS 157 - SOIL EROSION AND POLLUTION CONTROL.

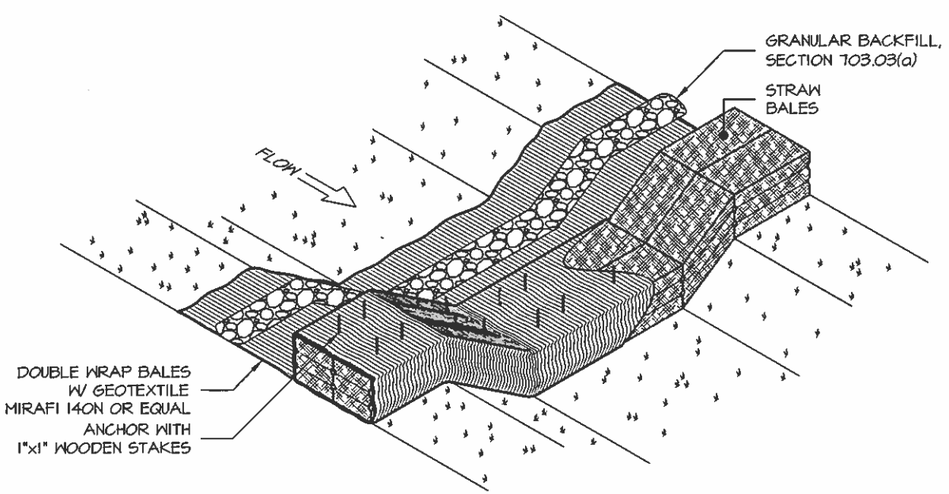

GEOTEXTILE-WRAPPED STRAW BALE SEDIMENT CONTROL WEIR DETAIL

Not to Scale

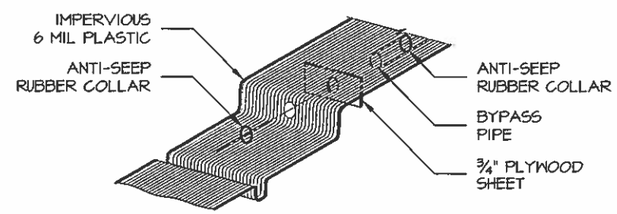

ANTI-SEEP RUBBER COLLAR DETAIL

Not to Scale

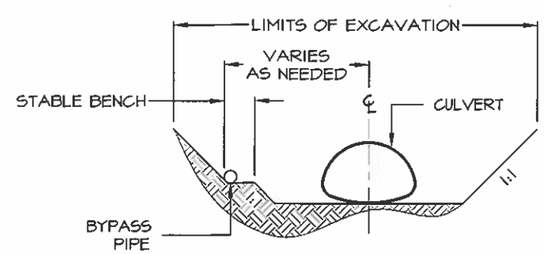

SECTION A - A

Not to Scale

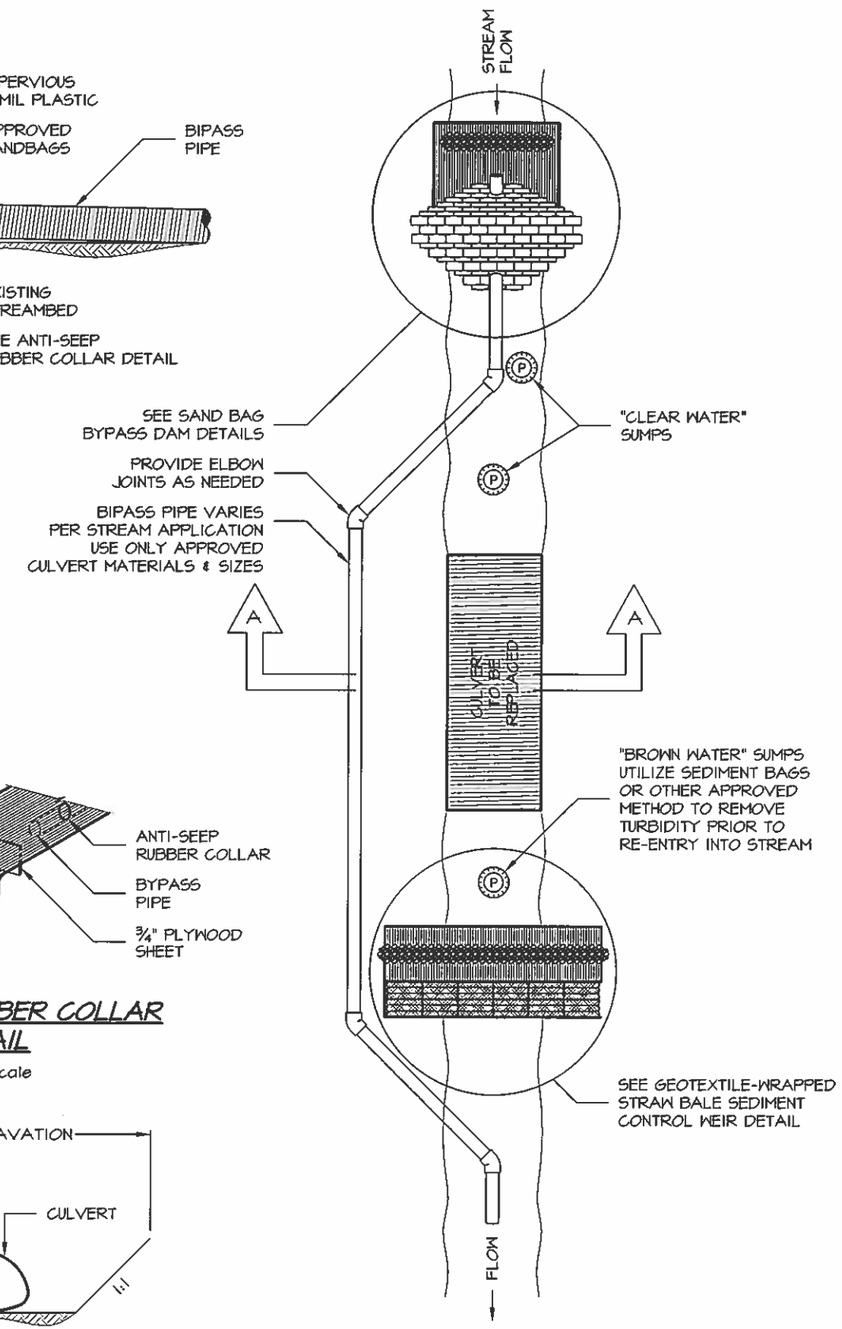

PLAN VIEW BYPASS TYPICAL

Not to Scale

DEWATERING TYPICALS

Not to Scale

FALL THIN SPECIFIED ROADS

DEWATERING TYPICALS

R6 - PACIFIC NORTHWEST REGION

U.S.D.A. FOREST SERVICE

SHEET NUMBER	TOTAL SHEETS
12	14

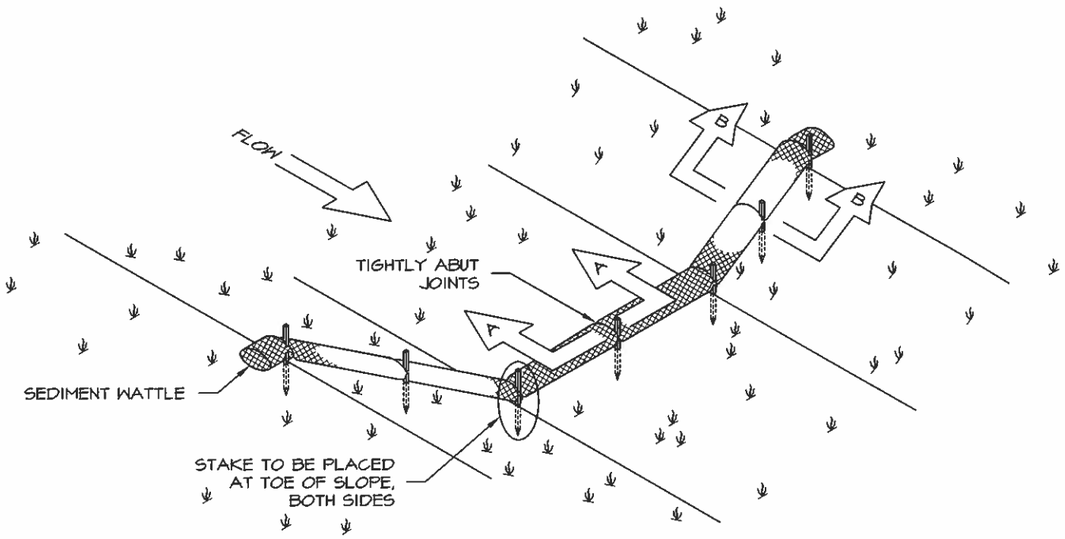

SEDIMENT WATTLE INSTALLATION TYPICAL

Not to Scale

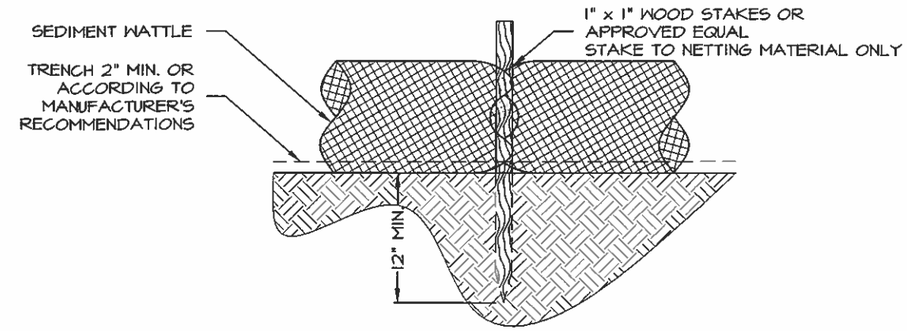

SECTION A - A WATTLE JOINT DETAIL

Not to Scale

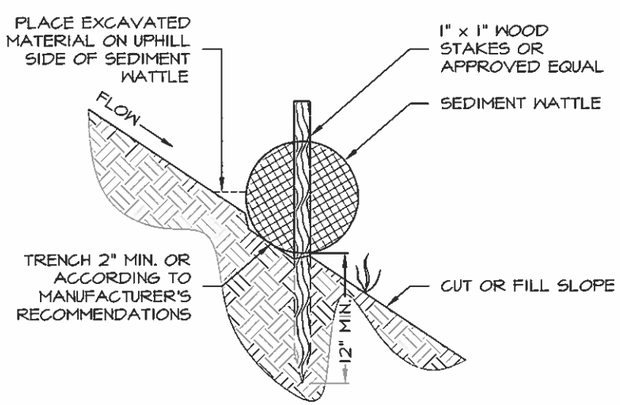

SECTION B - B STAKE DETAIL

Not to Scale

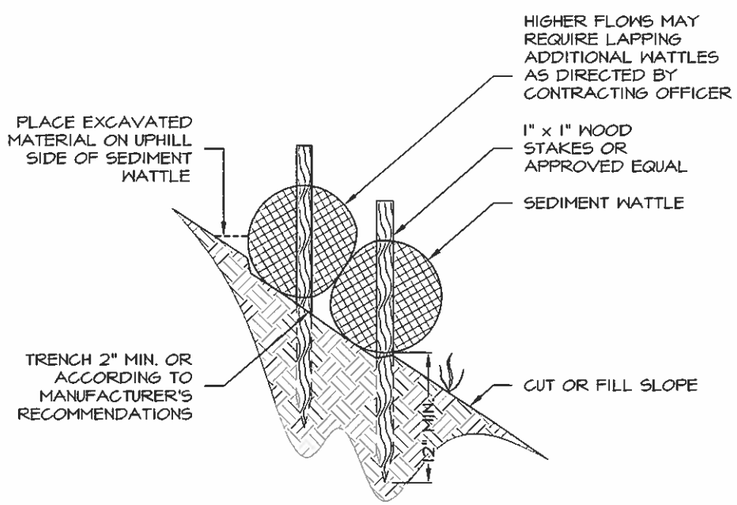

SECTION B - B WATTLE LAPPING DETAIL

Not to Scale

NOTES:

1. ALL DISTURBED GROUND SHALL BE COVERED USING A **WEED FREE HAY OR STRAW** AS DIRECTED BY CONTRACTING OFFICER. REFER TO 157 - SOIL EROSION CONTROL AND 713.05 - MULCH.
2. WATTLES SHALL BE INSTALLED AND MAINTAINED ACCORDING TO MANUFACTURER'S RECOMMENDATIONS.
3. REPAIR ANY RILLS OR GULLIES PRIOR TO INSTALLATION.
4. CONSTRUCT TRENCHES PARALLEL TO SLOPE CONTOURS OR AS DIRECTED BY CONTRACTING OFFICER.
5. FOR LARGER DISTURBED SLOPES PLACE ADDITIONAL PARALLEL ROWS WITH A MIN. SPACING OF 15' AS DIRECTED BY CONTRACTING OFFICER.
6. DRIVE STAKES INTO UNDISTURBED SOIL OF TRENCH BOTTOM 12" MIN. STAKE TO BE EXPOSED 2" MIN. ABOVE TOP OF WATTLE.
7. SPACE STAKES 24" O.C. MAX, 12" MAX AT WATTLE ENDS, OR ACCORDING TO MANUFACTURER'S RECOMMENDATIONS.
8. ALTERNATIVE STAKES MAY BE USED WITH THE APPROVAL OF THE CONTRACTING OFFICER.
9. WATTLE DIAMETERS CAN VARY. SIZE ACCORDING TO EXISTING GROUND CONDITIONS AS APPROVED BY CONTRACTING OFFICER.
10. 30" WOODEN STAKES ARE RECOMMENDED FOR 6", 9" AND 12" WATTLES 48" WOODEN STAKES ARE RECOMMENDED FOR 20" WATTLES.
11. INSTALL SEDIMENT CONTROL MEASURES AT THE OUTLET OF EACH NEW CULVERT LOCATION PRIOR TO EXCAVATION AS DIRECTED BY CONTRACTING OFFICER. TYPICAL WATTLE LENGTH SHALL BE 16' OR AS DIRECTED BY CONTRACTING OFFICER.
12. ALL WATTLES SHALL BE REMOVED AND DISPOSED OF IN A LEGAL MANNER AFTER EVIDENCE OF FURTHER EROSION HAS CEASED UNLESS OTHERWISE APPROVED BY CONTRACTING OFFICER.

SOIL EROSION & POLLUTION CONTROL TYPICALS

Not to Scale

FALL THIN SPECIFIED ROADS

SOIL EROSION & POLLUTION CONTROL

R6 - PACIFIC NORTHWEST REGION

U.S.D.A. FOREST SERVICE

SHEET NUMBER	TOTAL SHEETS
13	14

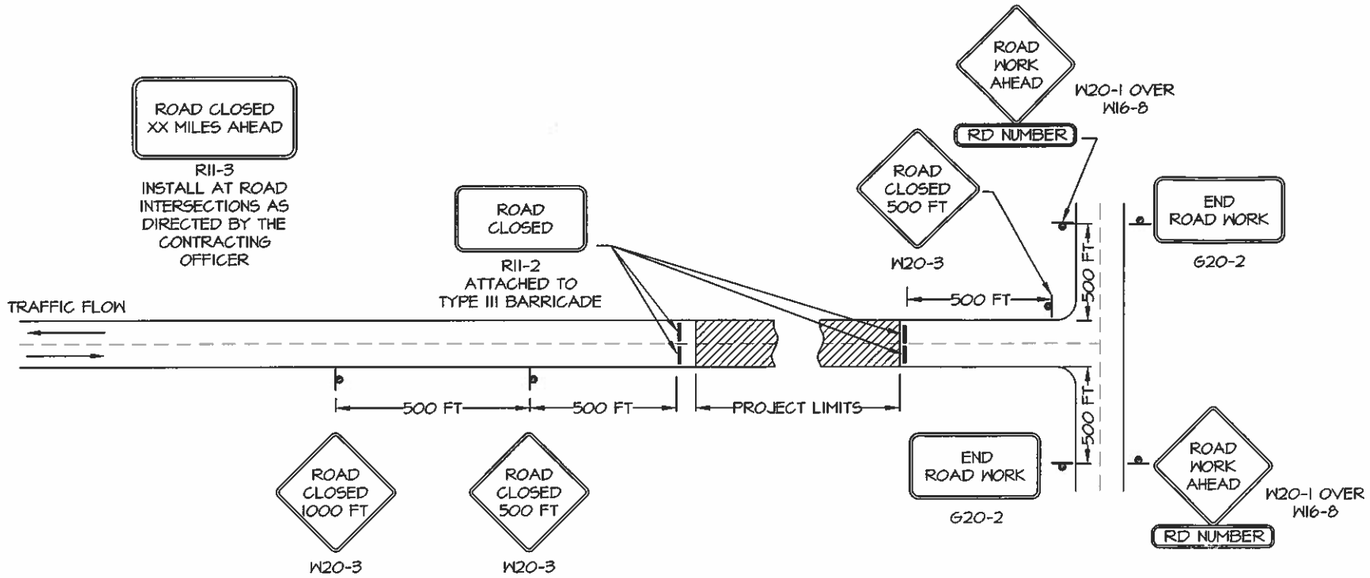

ROAD CLOSURE WITHOUT FLAGGERS

Not to Scale

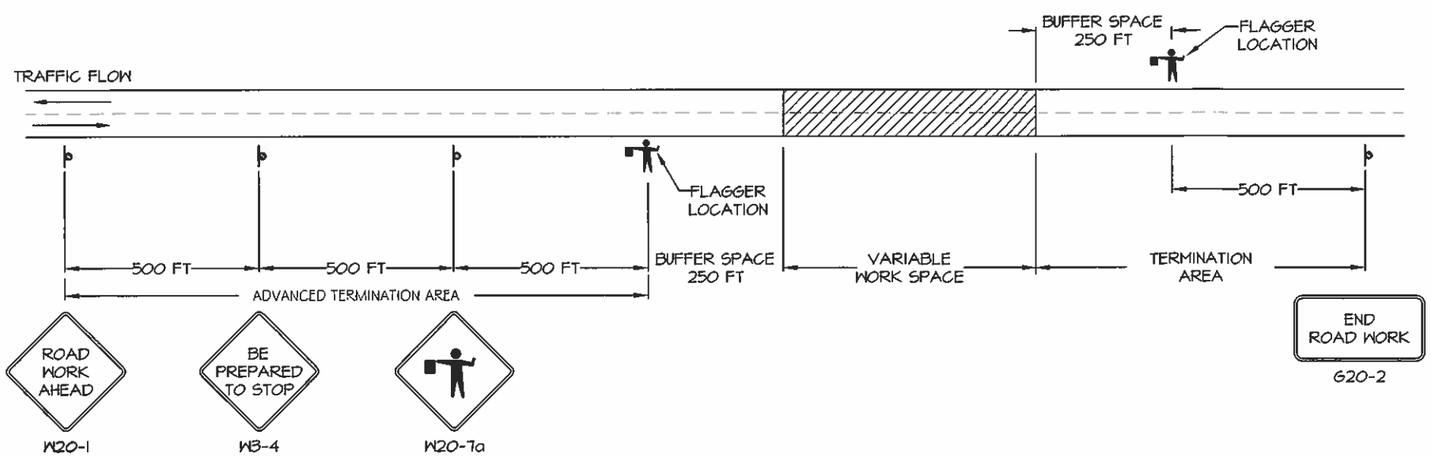

ROAD CLOSURE WITH FLAGGERS

Not to Scale

TEMPORARY TRAFFIC CONTROL TYPICALS

Not to Scale

NOTES:

1. FAILURE TO IMPLEMENT PROPER TRAFFIC CONTROL MEASURES SHALL RESULT IN NON-COMPLIANCE WITH THE EXISTING CONTRACT AND WOULD NEED TO BE CORRECTED IMMEDIATELY BEFORE RESUMING WORK.
2. ERECT ALL ADVANCE WARNING SIGNS BEFORE STARTING CONSTRUCTION AT LOCATIONS APPROVED BY CONTRACTING OFFICER.
3. NOT ALL DETAILS SHOWN IN THE TEMPORARY TRAFFIC CONTROL TYPICALS MAY BE APPLICABLE TO THIS PROJECT. THE CONTRACTOR MAY ADD OR DELETE INFORMATION AND DETAILS IN THIS TRAFFIC CONTROL PLAN AS NECESSARY TO ACCOMMODATE ACTUAL OPERATIONS WITH WRITTEN APPROVAL FROM THE CONTRACTING OFFICER.
4. WHERE ADVANCE WARNING SIGNS, PLACED AS SHOWN, INTERFERE WITH PERMANENT SIGNS, LOCATE THE WARNING SIGNS AS DETERMINED BY THE CONTRACTING OFFICER. VARY MESSAGES AS REQUIRED.
5. USE TYPE III OR HIGHER TYPE SHEETING ON ALL SIGNS AND CHANNELING DEVICES. WARNING LIGHTS ARE NOT NORMALLY NEEDED ON DEVICES WITH TYPE III OR HIGHER TYPE SHEETING, BUT MAY BE BENEFICIAL TO ATTRACT THE DRIVERS ATTENTION IN FOG OR OTHER SPECIAL CONDITIONS. WHEN USED, APPLY THE APPROPRIATE TYPE OF WARNING LIGHT (TYPE A, B, C, OR D) PER THE MUTCD CHAPTER 6F.
6. ADDITIONAL OR DIFFERENT MESSAGE SIGNS MAY BE REQUIRED TO FIT THE ACTUAL CONSTRUCTION CONDITIONS.
7. ENSURE ALL SIGN SUPPORTS EXPOSED TO IMPACT BY TRAFFIC MEET THE REQUIREMENTS OF NCHRP-350 FOR CRASH WORTHINESS.
8. DO NOT STORE TRAFFIC CONTROL DEVICES ALONG THE ROADWAY WHEN NOT IN USE. COVER POST-MOUNTED SIGNS WHEN NOT APPLICABLE.
9. IF W20-1 IS ON A ROADWAY OTHER THAN THAT ON WHICH THE ACTUAL CONSTRUCTION WORK OCCURS, INCLUDE A SUPPLEMENTARY PLAQUE INDICATING THE NAME OF THE ROAD THE WORK IS ON.
10. IF SIGNS WILL BE IN PLACE MORE THAN 72 CONSECUTIVE HOURS, USE GROUND-MOUNTED POST.
11. STATE STANDARDS MAY BE USED AS AN ALTERNATIVE IF APPROVED BY THE CONTRACTING OFFICER.
12. SIGNS ARE SHOWN FOR ONE DIRECTION OF TRAVEL ONLY. PLACE DEVICES SIMILAR TO THOSE DEPICTED FOR THE OPPOSITE DIRECTION OF TRAVEL.
13. FINAL LOCATION AND SPACING OF SIGNS AND DEVICES MAY BE CHANGED TO FIT FIELD CONDITIONS AS APPROVED BY THE CO.
14. FOR PILOT CAR OPERATION, MOUNT THE "PILOT CAR FOLLOW ME" (G20-4) SIGN AT A CONSPICUOUS LOCATION ON THE REAR OF VEHICLE. PROMINENTLY DISPLAY THE NAME OF THE CONTRACTOR ON THE PILOT CAR.
15. FOR NIGHT TIME FLAGGING OPERATION, PROVIDE FLOODLIGHTING AT FLAGGER STATIONS PER OSHA REGULATIONS.
16. DO NOT ALLOW EQUIPMENT, MATERIALS OR VEHICLES TO BE PARKED OR STORED IN THE BUFFER SPACE.

FALL THIN SPECIFIED ROADS

TEMPORARY TRAFFIC CONTROL TYPICALS

R6 - PACIFIC NORTHWEST REGION

U.S.D.A. FOREST SERVICE

SHEET NUMBER	TOTAL SHEETS
14	14