Index to Sheets

No.	
1	Cover Sheet
2	Vicinity Map
3	Reconstruction Log
4	Road Structure Details
5	Drain Dip Detail

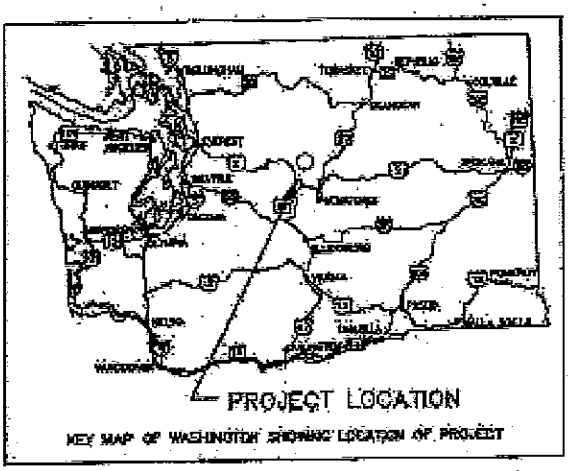

Estimate of Quantities

Item No.	Description	Meth. of Meas.	Unit	Quantity
15101	Mob.	AQ	LS	1
20420	Dip	AQ	EA	1
30326	Recondition Rd.	CQ	Mi.	0.15
32222	Pit Run	CQ	CY	150

UNITED STATES DEPARTMENT OF AGRICULTURE

FOREST SERVICE – REGION SIX

OKANOGAN & WENATCHEE NATIONAL FORESTS

WENATCHEE RIVER RANGER DISTRICT

DRAWINGS FOR PROPOSED

Chumley Stew Timber Sale

Road #	Length	Type of Work
7531-100	0.15	Reconstruction

Designed By: Ernie Stutzman **Date:** 7/20/12

Reviewed By: Raymond E. Ward **Date:** 7/23/12

Reviewed By: [signature] **Date:** 7/20/12
Zone Engineer

Approved By: [signature] **Date:** 24 JUL 12
District Ranger

Approved By: [signature] **Date:** 7/27/2012
Forest Engineer

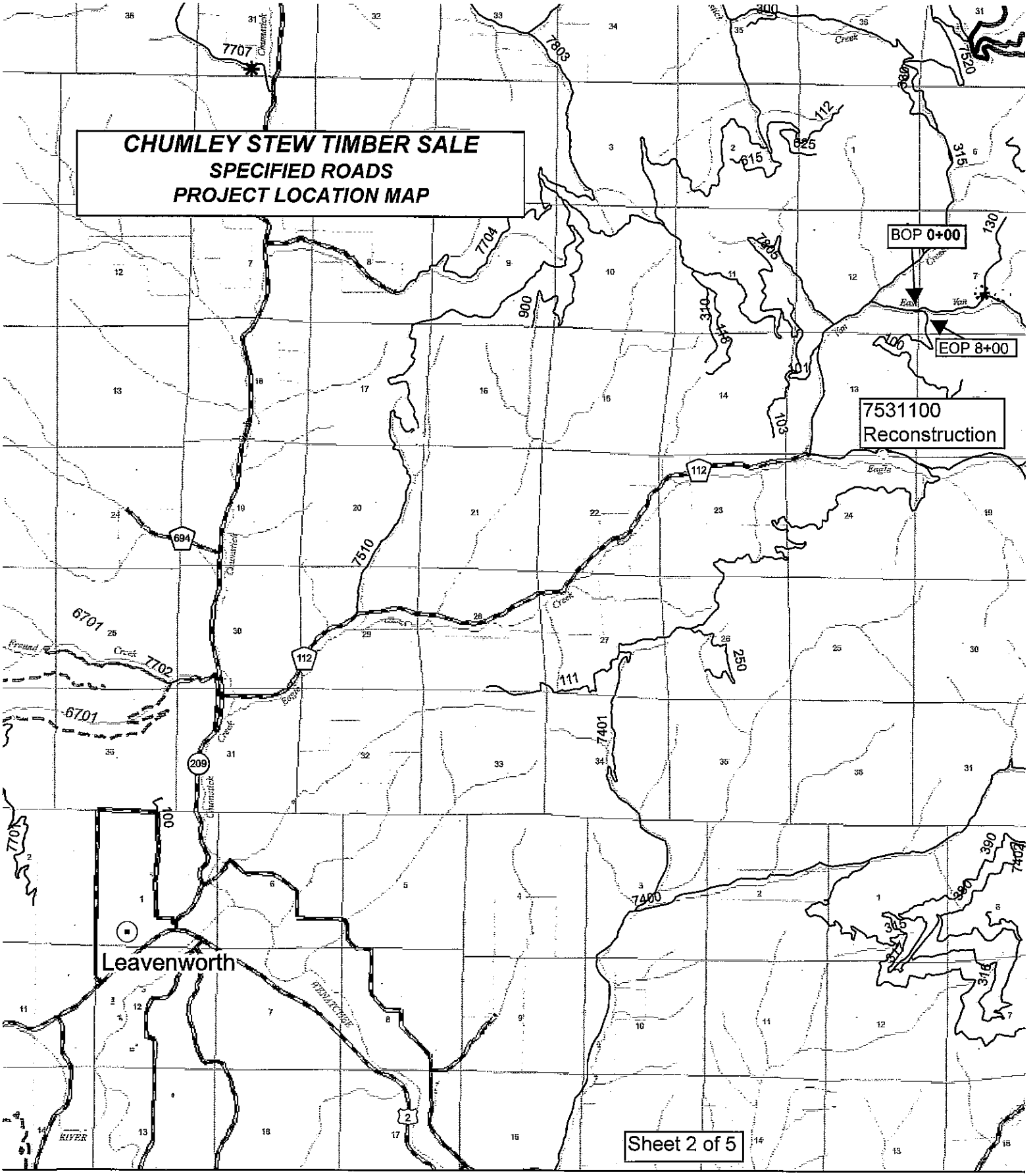
CHUMLEY STEW TIMBER SALE
SPECIFIED ROADS
PROJECT LOCATION MAP
BOP 0+00
EOP 8+00
7531100
Reconstruction
Leavenworth
Sheet 2 of 5

CHUMLEY STEW TIMBER SALE

Reconstruction Log
Road # 7531-100

Mile Post	Work Item
0+00	Begin reconditioning. From 0+00 to 8+00, recondition ditches, roadbed, shoulders, existing culverts and drainage features. (Item 30326)
1+00	Remove snag, left side of road. Place outside clearing limits. Incidental to road reconditioning. (Item 30326)
2+00	Begin placement of contractor provided pit run, 12 ft. width, 6 inch compacted depth. Contract Quantity 140 CY compacted in place. (Item 32222)
4+00	Culvert. Clean inlet and outlet. Incidental to reconditioning. (Item 30326)
4+50	From approximately 4+25 to 5+00 reestablish 12 ft. minimum width by removing bank slough and cut bank. Slope cutbank to avoid undercutting the bank. Incidental additional clearing will be needed. Do not sidecast road material. Incorporate road material into road prism. Scatter slash outside roadway and out of drainage way. Leave established vegetation on road fill from Sta. 4+00 to Sta. 6+00. Incidental to reconditioning. (Item 30326)
6+00	Re-Construct rolling dip. Place contractor provided pit run armoring in outlet. Contract quantity 10 CY (Items 20420 and 32222)
8+00	Jct. with Rd. 7531-101. End reconditioning. End placement of pit run. End of Project.

SHEET	TOTAL SHEETS
4	5

ROAD STRUCTURE DETAILS

CROSS SECTION

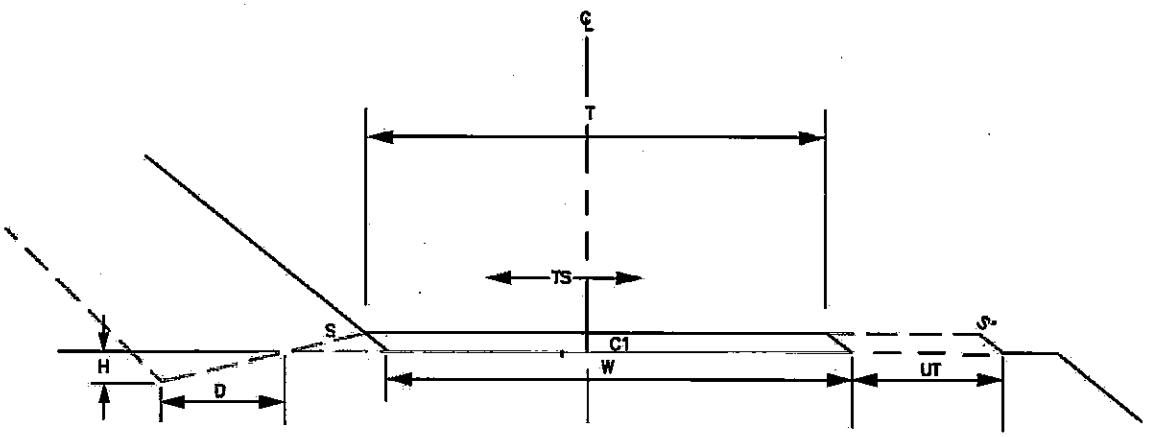

* ALL DRAWINGS NOT TO SCALE

ROAD NUMBER	MILE POST	TO MILE POST	CONSTRUCTION TOLERANCE	GRADING										AGGREGATE SURFACING			
				OUTSLOPE (O) % INSLOPE (I) CROWN (C)	ROADBED WIDTH FT	SUBGRADE WIDTH FT	DITCH DIMENSIONS FT		TURNOUT WIDTH FT	TURNOUT TRANSITION LENGTH FT	TURNAROUND TAPER FT	TURNAROUND LENGTH FT	TURNAROUND WIDTH FT	GRADATION	COMPACTED DEPTH INCHES	SLOPE RATIO	
				TS	T	W	D	H	UT	TL	TT	TD	TW	C1	C1	S	S'
7531-100	0.00	0.15		Same as Existing	12	14	← Same As Existing →							Pit Run	6	As Existing	

Place contractor provided pit run from Sta 2+00 to Sta. 8+00

No scarification required

GENERAL NOTES

1. CURVE WIDENING, TURNOUTS AND TURNAROUNDS SHALL BE SURFACED TO THE SAME DEPTH AS THE ROADBED UNLESS OTHERWISE SHOWN ON THE DRAWINGS.

1
5/7/97

PROJECT	SHEET	TOTAL SHEETS
	5	5

DRAIN DIP

TYPE: (BALANCED)

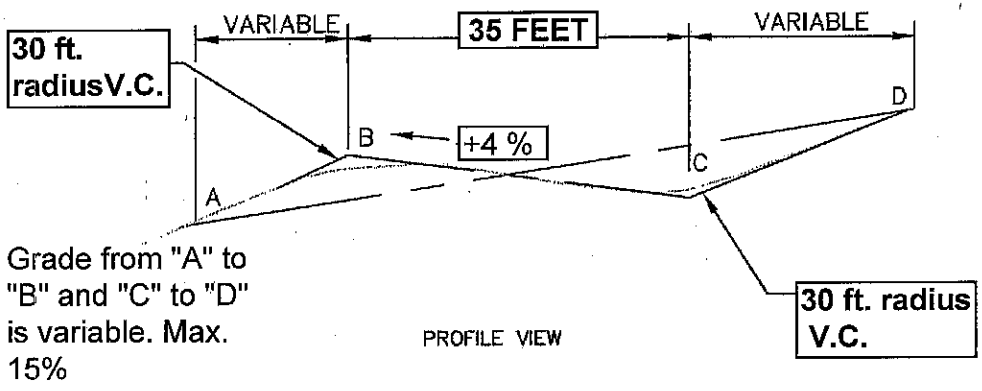

PROFILE VIEW

NOTE: PLAN OF DIP SHOWN IS FOR OUTSLOPED ROLLING DIP.
THE MINIMUM CROSS GRADE FROM "C" TO "E" IS 2% GREATER THAN THE ORIGINAL ROAD GRADE.

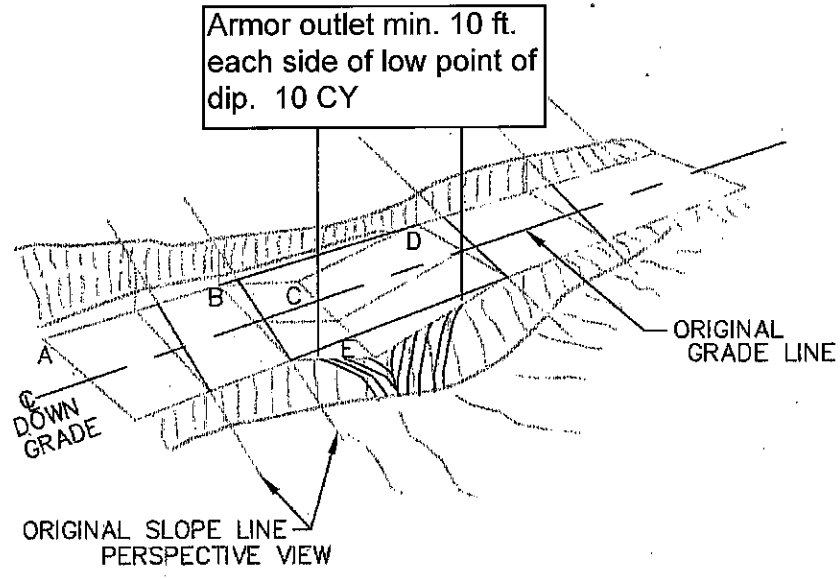

PERSPECTIVE VIEW

GENERAL NOTES

1. EXCAVATION BELOW THE EXISTING GRADE LINE WILL BE USED AS EMBANKMENT ABOVE THE EXISTING GRADE LINE ON THE DOWN GRADE SIDE OF THE DRAINAGE DIP, AS SPECIFIED ABOVE.
2. THE MAXIMUM DEPTH OF EXCAVATION AND EMBANKMENT WILL FLUCTUATE WITH THE STEEPNESS OF THE GRADE.

CHUMLEY STEW TIMBER SALE

SPECIFIED ROADS

TABLE OF CONTENTS

	No. of Pages
Schedule of Items	1
Specification List	3
Supplemental Specifications	42
Drawings	5

SCHEDULE OF ITEMS

CHUMLEY STEW TIMBER SALE
District: Wenatchee River
Forest: Okanogan-Wenatchee
County: Chelan

Item Number	Description	Method of Meas.	Unit	Quantity	Unit Price	Total
	Road 7531-100					
15101	Mobilization	AQ	LS	1	1200.00	1200.00
20420	Drainage Excavation, Dip	AQ	EA	1	200.00	200.00
30326	Road Reconditioning	CQ	Mi.	0.15	5200.00	780.00
32222	Pit Run, Maximum size 6 inches, Compaction Method A	CQ	CY	150	29.00	4350.00
					TOTAL	**$6,530.00**

Forest Service Specifications for Construction of Specified Roads and Bridges

Specification List

Specification List 1

Preface 4

101 - Terms, Format, and Definitions 4

101.01 Meaning of Terms 4

101.01 Meaning of Terms 4

101.03 Abbreviations. 5

101.04 Definitions 5

101.04 Definitions 8

102 - Bid, Award, and Execution of Contract 8

102 Bid, Award, and Execution of Contract 8

103 - Scope of Work 8

Deletions 8

104 - Control of Work 8

Deletions 8

104.03 9

104.06 Use of Roads by Contractor 9

105 - Control of Material 9

105.02 Material Sources. 9

105.02(a) Government-provided sources 9

105.02 Material Sources. 9

105.02(a) Contractor-provided sources. 9

105.05 Use of Material Found in the Work. 10

106 - Acceptance of Work 10

106.01 Conformity with Contract Requirements. 10

106.07 Delete 12

107 - Legal Relations and Responsibility to the Public 12

107.05 Responsibility for Damage Claims. 12

107.06 Contractor's Responsibility for Work. 12

107.08 Sanitation, Health, and Safety 12
107.09 Legal Relationship of the Parties. 13
107.10 Environmental Protection. 13
108 - Prosecution and Progress 14
108 Delete. 14
109 - Measurement and Payment 14
109 Deletions 14
109.02 Measurement Terms and Definitions. 14
153 - Contractor Quality Control 15
153.04 Records. 15
155 - Schedules for Construction Contracts 15
155 Delete. 15
201 - Clearing and Grubbing 15
201.02 Material: 15
201.01 Description 16
201.04 Clearing. (c) 16
201.04 Clearing. 17
201.04 Clearing. 17
201.06 Disposal 17
203 - Removal of Structures and Obstructions 18
203.01 Description. 18
203.04 Removing Material. 18
203.05 Disposing of Material. 18
204 - Excavation and Embankment 20
303 - Road Reconditioning 32
303.01 Work. 32
322 - Minor Aggregate Courses 33
703 - Aggregate 40
703.05 Subbase, Base, Surface Course, and Screened Aggregate. 40
Table 703-2 Correction 44
Table 703-2 Correction 45

703.10(e) Flakiness Index. 45
703.10(i) Adherent Coating. 45
718 - Traffic Signing and Marking Material 45
718.05 Aluminum Panels 45

Supplemental Specifications

Preface

Preface_wo_03_15_2004_m

Delete all but the first paragraph and add the following:

The Forest Service, US Department of Agriculture has adopted FP-03 for construction of National Forest System Roads.

101 - Terms, Format, and Definitions

101.00_nat_us_07_25_2005

101.01_nat_us_01_22_2009

101.01 Meaning of Terms

Delete all references to the TAR (Transportation Acquisition Regulations) in the specifications.

101.01_nat_us_01_22_2009

101.01 Meaning of Terms

Delete all references to the FAR (Federal Acquisition Regulations) in the specifications.

101.03 Abbreviations.

Add the following to (a) Acronyms:

AFPA	American Forest and Paper Association
MSHA	Mine Safety and Health Administration
NIST	National Institute of Standards and Technology
NESC	National Electrical Safety Code
WCLIB	West Coast Lumber Inspection Bureau

Add the following to (b) SI symbols:

mp	Milepost
ppm	Part Per Million

101.04 Definitions.

Delete the following definitions and substitute the following:

Bid Schedule--The Schedule of Items.

Bridge--No definition.

Contractor--The individual or legal entity contracting with the Government for performance of prescribed work. In a timber sale contract, the contractor is the "purchaser".

Culvert--No definition.

Right-of-Way--A general term denoting (1) the privilege to pass over land in some particular line (including easement, lease, permit, or license to occupy, use, or traverse public or private lands), or (2) Real property necessary for the project, including roadway, buffer areas, access, and drainage areas.

Add the following:

Adjustment in Contract Price--"Equitable adjustment," as used in the Federal Acquisition Regulations, or "construction cost adjustment," as used in the Timber Sale Contract, as applicable.

Change--"Change" means "change order" as used in the Federal Acquisition Regulations, or "design change" as used in the Timber Sale Contract.

Design Quantity--"Design quantity" is a Forest Service method of measurement from the FS-96 *Forest Service Specifications for the Construction of Roads and Bridges.* Under these FP specifications this term is replaced by the term "Contract Quantities".

Forest Service--The United States of America, acting through the Forest Service, U.S. Department of Agriculture.

Neat Line--A line defining the proposed or specified limits of an excavation or structure.

Pioneer Road--Temporary construction access built along the route of the project.

Purchaser--The individual, partnership, joint venture, or corporation contracting with the Government under the terms of a Timber Sale Contract and acting independently or through agents, employees, or subcontractors.

Protected Streamcourse--A drainage shown on the plans or timber sale area map that requires designated mitigation measures.

Road Order--An order affecting and controlling traffic on roads under Forest Service jurisdiction. Road Orders are issued by a designated Forest Officer under the authorities of 36 CFR, part 260.

Schedule of Items--A schedule in the contract that contains a listing and description of construction items, quantities, units of measure, unit price, and amount.

Utilization Standards--The minimum size and percent soundness of trees described in the specifications to determine merchantable timber.

Add Figure 101-1—Illustration of road structure terms:

Figure 101-1—Illustration of road structure terms.

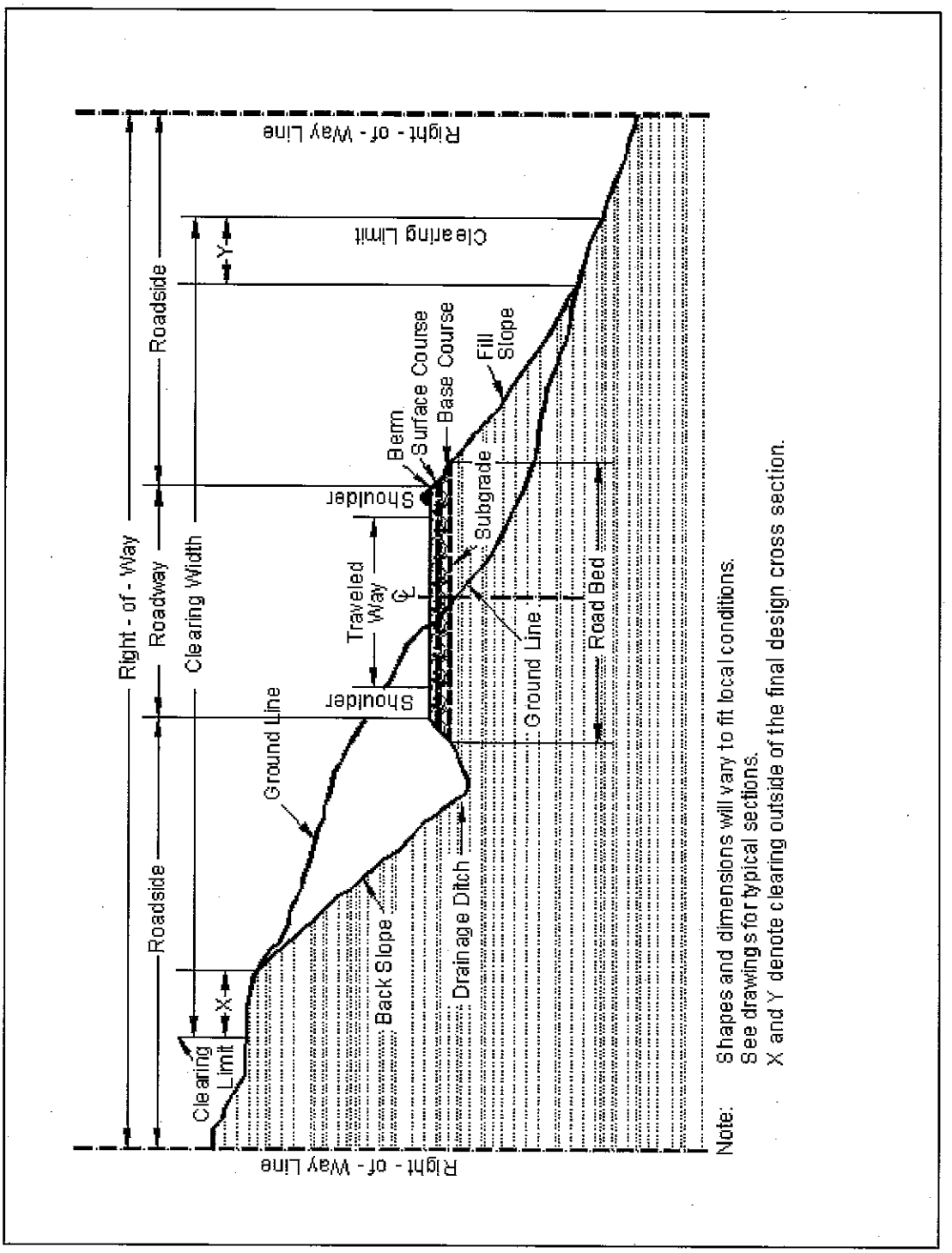

101.04_nat_us_11_06_2007

101.04 Definitions.
Delete the following definitions:

Contract Modification

Day

Notice to Proceed

Solicitation

102 - Bid, Award, and Execution of Contract

102.00_nat_us_02_16_2005

102 Bid, Award, and Execution of Contract

Delete Section 102 in its entirety.

103 - Scope of Work

103.00_nat_us_02_16_2005

Deletions

Delete all but subsection 103.01 Intent of Contract.

104 - Control of Work

104.00_nat_us_06_16_2006

Deletions

Delete Sections 104.01, 104.02, and 104.04.

104.03_nat_us_01_22_2009

104.03 Specifications and Drawings.

Delete 104.03.

104.06_nat_us_02_17_2005

Add the following subsection:

104.06 Use of Roads by Contractor

The Contractor is authorized to use roads under the jurisdiction of the Forest Service for all activities necessary to complete this contract, subject to the limitations and authorizations designated in the Road Order(s) or described in the contract, when such use will not damage the roads or national forest resources, and when traffic can be accommodated safely.

105 - Control of Material

105.02_nat_us_01_18_2007

105.02 Material Sources.

105.02(a) Government-provided sources.

Add the following:

Comply with the requirements of 30 CFR 56, subparts B and H. Use all suitable material for aggregate regardless of size unless otherwise designated. When required, re-establish vegetation in disturbed areas according to section 625.

105.02_nat_us_03_08_2007

105.02 Material Sources.

105.02(a) Contractor-provided sources.

Add the following:

A Forest Service weed specialist will inspect proposed sources to determine weed-free status. Provide the Contracting Officer written notification of proposed material sources **10** days prior to use. Written approval of the specific source will be provided to the contractor. If weed species are present in the proposed source, appropriate mitigation measures may allow conditional use of the source as required by the Contracting Officer.

105.05 Use of Material Found in the Work.

Delete 105.05 (a) and (b) and the last sentence of the second paragraph and substitute the following:

Materials produced or processed from Government lands in excess of the quantities required for performance of this contract are the property of the Government. The Government is not obligated to make reimbursement for the cost of producing these materials.

106 - Acceptance of Work

106.01_nat_us_07_31_2007

106.01 Conformity with Contract Requirements.

Delete Subsection 106.01 and substitute the following:

References to standard test methods of AASHTO, ASTM, GSA, and other recognized standard authorities refer to the methods in effect on the date of solicitation for bids.

Perform all work to the lines, grades, cross-sections, dimensions, and processes or material requirements shown on the plans or specified in the contract.

Incorporate manufactured materials into the work according to the manufacturer's recommendations or to these specifications, whichever is more strict.

Plan dimensions and contract specification values are the values to be strived for and complied with as the design values from which any deviations are allowed. Perform work and provide material that is uniform in character and reasonably close to the prescribed value or within the specified tolerance range. The purpose of a tolerance range is to accommodate occasional minor variations from the median zone that are unavoidable for practical reasons.

When standard manufactured items are specified (such as fence, wire, plates, rolled shapes, pipe conduits, etc., that are identified by gauge, unit mass, section dimensions, etc.), the identification will be considered to be nominal masses or dimensions. Unless specific contract tolerances are noted, established manufacturing tolerances will be accepted.

The Government may inspect, sample, or test all work at any time before final acceptance of the project. When the Government tests work, copies of test reports are furnished to the Contractor upon request. Government tests may or may not be performed at the work site. If Contractor testing and inspection is verified by the Government, the Contractor's results may be used by the Government to evaluate work for acceptance. Do not rely on the availability of Government test results for process control.

Acceptable work conforming to the contract will be paid for at the contract unit bid price. Four methods of determining conformity and accepting work are described in Subsections 106.02 to 106.05 inclusive. The primary method of acceptance is specified in each Section of work. However, work may be rejected at any time it is found by any of the methods not to comply with the contract.

Remove and replace work that does not conform to the contract, or to prevailing industry standards where no specific contract requirements are noted, at no cost to the Government.

(a) Disputing Government test results. **If the accuracy of Government test results is disputed, promptly inform the CO. If the dispute is unresolved after reasonable steps are taken to resolve the dispute, further evaluation may be obtained by written request. Include a narrative describing the dispute and a proposed resolution protocol that addresses the following:**

(1) Sampling method;

(2) Number of samples;
(3) Sample transport;
(4) Test procedures;
(5) Testing laboratories;
(6) Reporting;
(7) Estimated time and costs; and
(8) Validation process.

If the evaluation requires additional sampling or testing be performed, mutually agree with the Government on witnessing procedures and on sampling and testing by a third party laboratory. Use a third party laboratory accredited by the AASHTO accreditation program. Provide proof of the laboratory's accreditation for the test procedures to be used. Do not use the same laboratory that produced the disputed Government test results or that produced the test results used as a basis for the dispute.

The CO will review the proposed resolution protocol and may modify it before final approval and execution.

The Government will use the approved resolution protocol test results to determine the validity of the disputed testing. If the Government test results are validated, the Contractor will be responsible for all costs associated with developing and performing the resolution protocol. If the Government test results are not validated, the Government will be responsible for all costs associated with developing and performing the resolution protocol. If the validity of the Government test results cannot be determined, the Contractor and Government will equally share all costs associated with developing and carrying out the resolution protocol.

(b) Alternatives to removing and replacing non-conforming work. As an alternative to removal and replacement, the Contractor may submit a written request to:

(1) Have the work accepted at a reduced price; or

(2) Be given permission to perform corrective measures to bring the work into conformity.

The request must contain supporting rationale and documentation. Include references or data justifying the proposal based on an evaluation of test results, effect on service life, value of material or work, quality, aesthetics, and other tangible engineering basis. The CO will determine disposition of the nonconforming work.

106.07_nat_us_05_11_2004

106.07 Delete

Delete subsection 106.07.

107 - Legal Relations and Responsibility to the Public

107.05_nat_us_05_11_2004

107.05 Responsibility for Damage Claims.

Delete the entire subsection.

107.06_nat_us_06_16_2006

107.06 Contractor's Responsibility for Work.

Delete the following from the first paragraph.

"except as provided in Subsection 106.07".

107.08_nat_us_03_29_2005

107.08 Sanitation, Health, and Safety

Delete the entire subsection.

107.09 Legal Relationship of the Parties.

Delete the entire subsection.

107.10 Environmental Protection.

Add the following:

Design and locate equipment repair shops, stationary refueling sites, or other facilities to minimize the potential and impacts of hazardous material spills on Government land.

Before beginning any work, submit a Hazardous Spill Plan. List actions to be taken in the event of a spill. Incorporate preventive measures to be taken, such as the location of mobile refueling facilities, storage and handling of hazardous materials, and similar information. Immediately notify the CO of all hazardous material spills. Provide a written narrative report form no later than 24 hours after the initial report and include the following:

- Description of the item spilled (including identity, quantity, manifest number, and other identifying information).
- Whether amount spilled is EPA or state reportable, and if so whether it was reported, and to whom.
- Exact time and location of spill including a description of the area involved.
- Containment procedures.
- Summary of any communications the Contractor had with news media, Federal, state and local regulatory agencies and officials, or Forest Service officials.
- Description of clean-up procedures employed or to be employed at the site including final disposition and disposal location of spill residue.

When available provide copies of all spill related clean up and closure documentation and correspondence from regulatory agencies.

The Contractor is solely responsible for all spills or leaks that occur during the performance of this contract. Clean up spills or leaks to the satisfaction of the CO and in a manner that complies with Federal, state, and local laws and regulations.

108 - Prosecution and Progress

108.00_nat_us_02_16_2005

108 Delete.

Delete Section 108 in its entirety.

109 - Measurement and Payment

109.00_nat_us_02_17_2005

109 Deletions

Delete the following entire subsections:

109.06 Pricing of Adjustments.

109.07 Eliminated Work.

109.08 Progress Payments.

109.09 Final Payment.

109.02_nat_us_06_16_2006

109.02 Measurement Terms and Definitions.

(b) Contract quantity.

Add the following:

Contract quantities will be adjusted only when there are errors in the original design of 15% or more.

Change the following:

"(b) Cubic yard" to "(c) Cubic yard".

Add the following definition:

(p) Thousand Board Feet (Mbf). 1,000 board feet based on nominal widths, thickness, and extreme usable length of each piece of lumber or timber actually incorporated in the job. For glued laminated timber, 1,000 board feet based on actual width, thickness, and length of each piece actually incorporated in the job.

153 - Contractor Quality Control

153.04_nat_us_10_24_2007

153.04 Records.

Delete all but the first sentence

155 - Schedules for Construction Contracts

155.00_nat_us_05_11_2004

155 Delete.

Delete Section 155 in its entirety.

201 - Clearing and Grubbing

201.00_nat_us_08_05_2009

201.02 Material:

Delete Tree wound dressing material reference.

201.03 General.

Delete the last sentence.

201.04 Clearing.

Delete the last sentence of (d).

201.01 Description

Replace with the following

This work consists of clearing and grubbing within clearing limits and other designated areas.

201.04 Clearing. (c)

Delete paragraph (c) and replace with the following:

(c) In areas outside the excavation, embankment, and slope rounding limits, cut stumps to within 12 inches or one-third of the stump diameter of the ground, whichever is higher, measured on the side adjacent to the highest ground. For timber sales, stump heights will meet the requirements of the Timber Sale contract.

201.04 Clearing.

Delete subsection (d) and replace with the following:

(d) Do not cut vegetation less than 3 feet tall and less than 3 inches in diameter, that is within the clearing limits but beyond the roadway and not in a decking area, and that does not interfere with sight distance along the road.

Add the following:

(e) Trim branches of remaining trees or shrubs to give a clear height of 14 feet above the roadbed unless otherwise indicated. Trim tree limbs as near flush with the trunk as practicable.

(f) Remove brush from log decks. Deck logs so that logs are piled parallel to one another; can be removed by standard log loading equipment; will not damage standing trees; will not interfere with drainage, and will not roll. Keep logs in log decks free of brush and soil.

Construction Requirements

201.04 Clearing.

Add the following:

Utilization standards for merchantable timber are listed below. Fall and buck merchantable material into lengths not to exceed **40** feet. Pieces (logs) meet utilization standards when such pieces would have met Utilization Standards if bucking lengths were varied to include such material.

Minimum Utilization Standards

Length	Diameter (Inside Bark) at Small End	**40%** Net Scale in % of Gross Scale
8 feet	**5** inches	

201.04 Clearing.

Add the following:

When marked in advance, remove dead trees over 6 inches in diameter measured at 12 inches above the ground that lean toward the road and are tall enough to reach the roadbed.

201.06 Disposal.

Delete the first sentence of this subsection and substitute the following:

Dispose of merchantable timber designated for removal according to the provisions of the timber sale contract.

203 - Removal of Structures and Obstructions

203.01_nat_us_02_25_2005

203.01 Description.

Delete and replace with the following:

This work consists of disposing of construction slash and debris, salvaging, removing, and disposing of buildings, fences, structures, pavements, culverts, utilities, curbs, sidewalks, and other obstructions.

203.04_nat_us_02_18_2005

203.04 Removing Material.

Replace the fourth and fifth paragraphs with the following:

Where part of an existing culvert is removed, remove the entire culvert upstream from the removal. The remaining downstream culvert may be left in place if no portion of the culvert is within 12 inches of the subgrade, embankment slope, or new culvert or structure; and the culvert ends are sealed with concrete.

Remove structures and obstructions in the roadbed to 12 inches below subgrade elevation. Remove structures and obstructions outside the roadbed to 12 inches below finished ground or to the natural stream bottom.

203.05_nat_us_02_18_2005

203.05 Disposing of Material.

Add the following:

(e) Windrowing Construction Slash. Place construction slash outside the roadway in neat, compacted windrows approximately parallel to and along the toeline of embankment slopes. Do not permit the top of the windrows to extend above subgrade. Use construction equipment to matt down all material in a windrow to form a compact and uniform pile. Construct breaks of at least 15 feet at least every 200 feet in a windrow. Do not place windrows against trees. Obtain approval for pioneer roads. A pioneer road may be constructed to provide an area for placement of windrows, provided the excavated material is kept within the clearing limits and does not adversely affect the road construction.

(f) Scattering. Scatter construction slash outside the clearing limits without damaging trees. Limb all logs. Place logs and stumps away from trees, positioned so they will not roll, and are not on top of one another. Limb and scatter other construction slash to reduce slash concentrations.

(g) Chipping or Grinding. Use an approved chipping machine to grind slash and stumps greater than 3 inches in diameter and longer than 3 feet. Deposit chips or ground woody material on embankment slopes or outside the roadway to a loose depth less than 6 inches. Minor amounts of

chips or ground woody material may be permitted within the roadway if they are thoroughly mixed with soil and do not form a layer.

(h) Debris Mat. Use tree limbs, tops, cull logs, split stumps, wood chunks, and other debris to form a mat upon which construction equipment is operated. Place stumps upside down and blend stumps into the mat.

(i) Decking Firewood Material. Remove brush from decks. Limb and deck logs that do not meet Utilization Standards according to Subsection 201.04 as directed by the CO. Cut logs to lengths less than 30 feet. Ensure that logs stacks are stable and free of brush and soil.

(j) Removal to designated locations. Remove construction slash to designated locations.

(k) Piling. Pile construction slash in designated areas. Place and construct piles so that if the piles are burned, the burning will not damage remaining trees. Keep piles free of dirt from stumps. Cut unmerchantable logs into lengths of less than 20 feet.

(l) Placing Slash on Embankment Slopes. Place construction slash on completed embankment slopes to reduce soil erosion. Place construction slash as flat as practicable on the completed slope. Do not place slash closer than 2 feet below subgrade. Priority for use of available slash is for: (1) through fills; (2) insides of curves; and (3) ditch relief outlets.

(m) Hydrological Sensitive Placement. Where required use this method in combination with other designated methods to dispose of material to reduce erosion and to aid in re-vegetation:

1. Place windrow segments on contours, wrap in type I geotextile.
2. Place logs as log erosion barriers on contours. Place logs so that 80% of their length is on the ground surface.
3. Scatter slash on bare or disturbed areas within or outside the clearing limits as directed.
4. Scatter chips or ground woody material on bare or disturbed areas within or outside the clearing limits as directed.

Place stumps in swales or on sites to form planting pockets. Place windrow segments on contours, wrap in type I geotextile.

203.08_nat_us_02_24_2005

203.08 Payment

Add the following:

Disposal of construction slash will be compensated under the designated pay item in Section 201.

204 - Excavation and Embankment

Replace Section 204 in its entirety with the following:

Description

204.01 This work consists of excavating material and constructing embankments. This includes furnishing, hauling, stockpiling, placing, disposing, sloping, shaping, compacting, and finishing earthen and rocky material.

204.02 Definitions.

(a) Excavation. Excavation consists of the following:

(1) Roadway excavation. All material excavated from within the right-of-way or easement areas, except subexcavation covered in (2) below and structure excavation covered in Sections 208 and 209. Roadway excavation includes all material encountered regardless of its nature or characteristics.

(2) Subexcavation. Material excavated from below subgrade elevation in cut sections or from below the original groundline in embankment sections. Subexcavation does not include the work required by Subsections 204.05, 204.06(b), and 204.06(c).

(3) Borrow excavation. Material used for embankment construction that is obtained from outside the roadway prism. Borrow excavation includes unclassified borrow, select borrow, and select topping.

(b) Embankment construction. Embankment construction consists of placing and compacting roadway or borrow excavation. This work includes:

(1) Preparing foundation for embankment;
(2) Constructing roadway embankments;
(3) Benching for side-hill embankments;
(4) Constructing dikes, ramps, mounds, and berms; and
(5) Backfilling subexcavated areas, holes, pits, and other depressions.

(c) Conserved topsoil. Excavated material conserved from the roadway excavation and embankment foundation areas that is suitable for growth of grass, cover crops, or native vegetation.

(d) Waste. Excess and unsuitable roadway excavation and subexcavation that cannot be used.

Material

204.03 Conform to the following Subsections:

Backfill material	704.03
Select borrow	704.07
Select topping	704.08
Topping	704.05
Unclassified borrow	704.06
Water	725.01

Construction Requirements

204.04 Preparation for Roadway Excavation and Embankment Construction. Clear the area of vegetation and obstructions according to Sections 201 and 203.

204.05 Reserved.

204.06 Roadway Excavation. Excavate as follows:

(a) General. Do not disturb material and vegetation outside the construction limits. Incorporate only suitable material into embankments. Replace any shortage of suitable material caused by premature disposal of roadway excavation. Dispose of unsuitable or excess excavation material according to Subsection 204.14.

At the end of each day's operations, shape to drain and compact the work area to a uniform cross-section. Eliminate all ruts and low spots that could hold water.

Retrieve material deposited outside of the clearing limits as directed by the CO. Place unsuitable material in designated areas.

(b) Rock cuts. Blast rock according to Section 205. Excavate rock cuts to 6 inches below subgrade within the roadbed limits. Backfill to subgrade with topping or with other suitable material. Compact the material according to Subsection 204.11

(c) Earth cuts. Scarify earth cuts to 6 inches below subgrade within the roadbed limits. Compact the scarified material according to Subsection 204.11.

(d) Pioneer Roads. Road pioneering, slash disposal, and grubbing of stumps may proceed concurrently with excavation. Conduct excavation and placement operations so material to be treated under Section 201 will not be incorporated into the roadway unless specified in the slash treatment method. Maintain drainage during pioneering operations.

Remove snow and ice in advance of the work and deposit beyond the roadway limits in a manner that will not waste material or generate sediment. Do not incorporate snow and ice into embankments. Place snow or ice in a manner to prevent resource damage.

204.07 Subexcavation. Excavate material to the limits designated by the CO. Take cross-sections according to Section 152. Prevent unsuitable material from becoming mixed with the backfill. Dispose of unsuitable material according to Subsection 204.14. Backfill the subexcavation with topping, or other suitable material. Compact the material according to Subsection 204.11.

204.08 Borrow Excavation. Use all suitable roadway excavation in embankment construction. Do not use borrow excavation when it results in excess roadway excavation. Deduct excess borrow excavation from the appropriate borrow excavation quantity.

Obtain borrow source acceptance according to Subsection 105.02. Develop and restore borrow sources according to Subsection 105.03. Do not excavate beyond the established limits. When applicable, shape the borrow source to permit accurate measurements when excavation is complete.

204.09 Preparing Foundation for Embankment Construction. Prepare foundation for embankment construction as follows:

(a) Embankment less than 4 feet high over natural ground. When designated, remove topsoil and break up the ground surface to a minimum depth of 6 inches by plowing or scarifying. Compact the ground surface according to Subsection 204.11.

(b) Embankments over an existing asphalt, concrete, or gravel road surface. Scarify gravel roads to a minimum depth of 6 inches. Scarify or pulverize asphalt and concrete roads to 6 inches below the pavement. Reduce all particles to a maximum size of 6 inches and produce a uniform material. Compact the surface according to Subsection 204.11.

(c) Embankment across ground not capable of supporting equipment. Dump successive loads of embankment material in a uniformly distributed layer to construct the lower portion of the embankment. Limit the layer thickness to the minimum depth necessary to support the equipment.

(d) Embankment on an existing slope steeper than 1V:3H. Cut horizontal benches in the existing slope to a sufficient width to accommodate placement and compaction operations and equipment. Bench the slope as the embankment is placed and compacted in layers. Begin each bench at the intersection of the original ground and the vertical cut of the previous bench.

204.10 Embankment Construction. Incorporate only suitable roadway excavation material into the embankment. When the supply of suitable roadway excavation is exhausted, furnish unclassified borrow to complete the embankment. Obtain written approval before beginning construction of embankments over 6 feet high at subgrade centerline. Construct embankments as follows:

(a) General. At the end of each day's operations, shape to drain and compact the embankment surface to a uniform cross-section. Eliminate all ruts and low spots that could hold water.

During all stages of construction, route and distribute hauling and leveling equipment over the width and length of each layer of material.

Compact embankment side slopes flatter than 1V:1.75H with a tamping type roller or by walking with a dozer. For slopes 1V:1.75H or steeper, compact the slopes as construction of the embankment progresses.

Where placing embankment on one side of abutments, wing walls, piers, or culvert headwalls, compact the material using methods that prevent excessive pressure against the structure.

Where placing embankment material on both sides of a concrete wall or box structure, conduct operations so compacted embankment material is at the same elevation on both sides of the structure.

Where structural pilings are placed in embankment locations, limit the maximum particle size to 4 inches.

(b) Embankment within the roadway prism. Place embankment material in horizontal layers not exceeding 12 inches in compacted thickness. Incorporate oversize boulders or rock fragments into the 12-inch layers by reducing them in size or placing them individually as required by (c) below. Compact each layer according to Subsection 204.11 before placing the next layer.

Material composed predominately of boulders or rock fragments too large for 12-inch layers may be placed in layers up to 24 inches thick. Incorporate oversize boulders or rock fragments into the 24-inch layer by reducing them in size or placing them individually according to (c) below. Place sufficient earth and smaller rocks to fill the voids. Compact each layer according to Subsection 204.11 before placing the next layer.

(c) Individual rock fragments and boulders. Place individual rock fragments and boulders greater than 24 inches in diameter as follows:

(1) Reduce rock to less than 48 inches in the largest dimension.
(2) Distribute rock within the embankment to prevent nesting.
(3) Place layers of embankment material around each rock to a depth not greater than that permitted by (b) above. Fill all the voids between rocks.
(4) Compact each layer according to Subsection 204.11 before placing the next layer.

(d) Embankment outside of roadway prism. Where placing embankment outside the staked roadway prism, place material in horizontal layers not exceeding 24 inches in compacted thickness. Compact each layer according to Subsection 204.11.

204.11 Compaction. Compact the embankment using one of the following methods as specified:

(a) <u>Compaction A.</u> Use AASHTO T 27 to determine the amount of material retained on a Number 4 sieve. If there is more than 80 percent retained on the No. 4 sieve use procedure (1).

If there is 50 to 80 percent retained on the No. 4 sieve use procedure (2). If there is less than 50 percent retained on the No. 4 sieve use procedure (3).

(1) Adjust the moisture content to a level suitable for compaction. Fill the interstices around rock with earth or other fine material as practical. Use compression-type rollers at speeds less than 6feet per second and vibratory rollers at speeds less than 3 feet per second. Compact each layer of material full width with one of the following and until there is no visible evidence of further consolidation.

(a) Four roller passes of a vibratory roller having a minimum dynamic force of 40,000 pounds impact per vibration and a minimum frequency of 1000 vibrations per minute.
(b) Eight roller passes of a 20-ton compression-type roller.
(c) Eight roller passes of a vibratory roller having a minimum dynamic force of 30,000 pounds impact per vibration and a minimum frequency of 1000 vibrations per minute.

Increase the compactive effort for layers deeper than 12 inches as follows:

- For each additional 6 inches or fraction thereof, increase the number of roller passes in (a) above by four passes.
- For each additional 6 inches or fraction thereof, increase the number of roller passes in (b) and (c) above, by eight passes.

(2) Use AASHTO T 99 to determine the optimum moisture content of the portion of the material passing a No. 4 sieve. Multiply this number by the percentage of material passing a No. 4 sieve, and add 2 percent to determine the optimum moisture content of the material. Adjust the moisture content of material classified A-1 through A-5 to a moisture content suitable for compaction. Adjust the moisture content of material classified A-6 and A-7 to within 2 percent of the optimum moisture content.

Use compression-type rollers at speeds less than 6 feet per second and vibratory rollers at speeds less than 3 feet per second. Compact each layer of material full width according to (1) above.

(3) Classify the material according to AASHTO M 145. For material classified A-1 or A-2-4, determine the maximum density according to AASHTO T 180, method D. For other material classifications, determine the optimum moisture content and maximum density according to AASHTO T 99, method C.

Adjust the moisture content of material classified A-1 through A-5 to a moisture content suitable for compaction. Adjust the moisture content of material classified A-6 and A-7 to within 2 percent of the optimum moisture content.

Use compression-type or vibratory rollers. Compact each layer of material full width to at least 95 percent of the maximum density. Determine the in-place density and moisture content according to AASHTO T 310 or other approved test procedures. When required, use AASHTO T 224 to correct for coarse particles.

(b) Compaction B. Place material by end dumping to the minimum depth needed for operation of spreading equipment. Adjust the moisture content of the material to obtain a mass that will not visibly deflect under the load of the hauling and spreading equipment. Operate compaction equipment over the full width of each layer until there is no visible evidence of further consolidation or, if when a sheepsfoot roller is used, the roller "walks out" of the layer. Make at least three complete passes.

(c) Compaction C. Place material by end dumping to the minimum depth needed for operation of spreading equipment. Level and smooth each embankment layer before placing the next layers. Operate hauling and spreading equipment uniformly over the full width of each layer. Construct a solid embankment with adequate compaction by working smaller rock and fines in with the larger rocks to fill the voids, and by operating hauling and spreading equipment uniformly over the full width of each layer as the embankment is constructed.

204.12 Ditches. Slope, grade, and shape ditches. Remove all projecting roots, stumps, rock, or similar matter. Maintain all ditches in an open condition and free from leaves, sticks, and other debris.

Form furrow ditches by plowing or using other acceptable methods to produce a continuous furrow. Place all excavated material on the downhill side so the bottom of the ditch is approximately 18 inches below the crest of the loose material. Clean the ditch using a hand shovel, ditcher, or other suitable method. Shape to provide drainage without overflow.

204.13 Sloping, Shaping, and Finishing. Complete slopes, ditches, culverts, riprap, and other underground minor structures before placing aggregate courses. Slope, shape, and finish as follows:

(a) Sloping. Leave all earth slopes with uniform roughened surfaces, except as described in (b) below, with no noticeable break as viewed from the road. Except in solid rock, round tops and bottoms of all slopes including the slopes of drainage ditches. Round material overlaying solid rock to the extent practical. Scale all rock slopes. Slope rounding is not required on tolerance class D though M roads.

If a slide or slipout occurs on a cut or embankment slope, remove or replace the material, and repair or restore all damage to the work. Bench or key the slope to stabilize the slide. Reshape the cut or embankment slope to an acceptable condition.

(b) Stepped slopes. Where required by the contract, construct steps on slopes of 1⅓V:1H to 1V:2H. Construct the steps approximately 18 inches high. Blend the steps into natural ground at the end of the cut. If the slope contains nonrippable rock outcrops, blend steps into the rock. Remove loose material found in transitional area. Except for removing large rocks that may fall, scaling stepped slopes is not required.

(c) Shaping. Shape the subgrade to a smooth surface and to the cross-section required. Shape slopes to gradually transition into slope adjustments without noticeable breaks. At the ends of

cuts and at intersections of cuts and embankments, adjust slopes in the horizontal and vertical planes to blend into each other or into the natural ground.

(d) Finishing. Finish the roadbed to be smooth and uniform, and shaped to conform to the typical sections. Remove unsuitable material from the roadbed and replace it with suitable material. Finish roadbeds to the tolerance class shown in table 204-2.Ensure that the subgrade is visibly moist during shaping and dressing. Scarify to 6 inches below the bottom of low sections, holes, cracks, or depressions and bring back to grade with suitable material. Maintain proper ditch drainage.

For surfaced roads, remove all material larger than 6 inches from the top 6 inches of the roadbed.

For unsurfaced roads, use one of the following methods to finish the roadbed:

(1) **Method A**. Remove all material larger than 6 inches from the top 6 inches of the roadbed and replace with suitable material.
(2) **Method B**. Use a vibratory grid roller or approved equal with a minimum weight of 10 tons. Roll at least 5 full-width passes or until there is no visible evidence of further consolidation.
(3) **Method C**. For roads designated as Construction Tolerance Class K, L, or M, finish the roadbed by spreading the excavation. Eliminate rock berms.

204.14 Disposal of Unsuitable or Excess Material. Dispose of unsuitable or excess material at designated sites or legally off of the project.

When there is a pay item for waste, shape and compact the waste material in its final location. Do not mix clearing or other material not subject to payment with the waste material.

204.15 Acceptance. See Table 204-1 for sampling and testing requirements.

Material for embankment and conserved topsoil will be evaluated under Subsections 106.02 and 106.04.

Excavation and embankment construction will be evaluated under Subsections 106.02 and 106.04.

Clearing and removal of obstructions will be evaluated under Sections 201 and 203.

Measurement

204.16 Measure the Section 204 items listed in the bid schedule according to Subsection 109.02 and the following as applicable.

(a) Roadway excavation. Measure roadway excavation in its original position as follows:

(1) Include the following volumes in roadway excavation:

(a) Roadway prism excavation;
(b) Rock material excavated and removed from below subgrade in cut sections;
(c) Unsuitable material below subgrade and unsuitable material beneath embankment areas when a pay item for subexcavation is not shown in the bid schedule;
(d) Ditches, except furrow ditches measured under a separate bid item;
*(e*Topsoil;
(f) Borrow material used in the work when a pay item for borrow is not shown in the bid schedule;
(g) Loose scattered rocks removed and placed as required within the roadway;
(h) Conserved material taken from stockpiles and used in Section 204 work; and
(i) Slide and slipout material not attributable to the Contractor's method of operation.

(2) Do not include the following in roadway excavation:
(a) Overburden and other spoil material from borrow sources;
(b) Overbreakage from the backslope in rock excavation;
(c) Water or other liquid material;
(d) Material used for purposes other than required;
(e) Roadbed material scarified in place and not removed;
(f) Material excavated when stepping cut slopes;
(g) Material excavated when rounding cut slopes;
(h) Preparing foundations for embankment construction;
(i) Material excavated when benching for embankments;
(j) Slide or slipout material attributable to the Contractor's method of operation;
(k) Conserved material taken from stockpiles constructed at the option of the Contractor; and
(l) Material excavated outside the established slope limits.

(3) When both roadway excavation and embankment construction pay items are shown in the bid schedule, measure the following as roadway excavation only:
(a) Unsuitable material below subgrade in cuts and unsuitable material beneath embankment areas when a pay item for subexcavation is not shown in the bid schedule;
(b) Slide and slipout material not attributable to the Contractor's method of operations; and
(c) Drainage ditches, channel changes, and diversion ditches.

(b) Unclassified borrow, select borrow, and select topping. When measuring by the cubic yard measure in its original position. If borrow excavation is measured by the cubic yard in place, take initial cross-sections of the ground surface after stripping overburden. Upon completion of excavation and after the borrow source waste material is returned to the source, retake cross-sections before replacing the overburden.
Do not measure borrow excavation used in place of excess roadway excavation.

(c) Embankment construction. Measure embankment construction in its final position. Do not make deductions from the embankment construction quantity for the volume of minor structures.

(1) Include the following volumes in embankment construction:
(a) Roadway embankments;
(b) Material used to backfill subexcavated areas, holes, pits, and other depressions;
(c) Material used to restore obliterated roadbeds to original contours; and
(d) Material used for dikes, ramps, mounds, and berms.

(2) Do not include the following in embankment construction:
(a) Preparing foundations for embankment construction;
(b) Adjustments for subsidence or settlement of the embankment or of the foundation on which the embankment is placed; and
(c) Material used to round fill slopes.

(d) Rounding cut slopes. Measure rounding cut slopes horizontally along the centerline of the roadway if a pay item for slope rounding is included in the bid schedule. If a pay item for slope rounding is not included in the bid schedule slope rounding will be considered subsidiary to excavation.

(e) Waste. Measure waste by the cubic yard in its final position. Take initial cross-sections of the ground surface after stripping over burden. Upon completion of the waste placement, retake cross-sections before replacing overburden.

(f) Slope scaling. Measure slope scaling by the cubic yard in the hauling vehicle.

Payment

204.17 The accepted quantities will be paid at the contract price per unit of measurement for the Section 204 pay items listed in the bid schedule. Payment will be full compensation for the work prescribed in this Section. See Subsection 109.05.

Table 204-1
Sampling and Testing Requirements

Material or Product	Type of Acceptance (Subsection)	Characteristic	Category	Test Methods Specifications	Sampling Frequency	Point of Sampling	Split Sample	Reporting Time
Topping (704.05) & unclassified borrow (704.06)	Measured and tested for conformance (106.04)	Classification	—	AASHTO M 145	1 per soil type	Processed material before incorporating in work	Yes, when requested	Before using in work
		Moisture-density	—	AASHTO T 180, method D[1] or T 99, method C[1]	1 per soil type but not less than 1 per	"	"	"
		Compaction	—	AASHTO T 310 or other approved procedures	1 per 6000 yd^2 but not less than 1 per layer	In-place	—	Before placing next layer
Select borrow (704.07 & Select topping (704.08)	Measured and tested for conformance (106.04)	Classification	—	AASHTO M 145	1 per soil type but not less than 1 for each day of production	Processed material before incorporating	Yes, when requested	Before using in work
		Gradation	—	AASHTO T 27	"	"	"	"
		Liquid limit	—	AASHTO T 89	"	"	"	"
		Moisture-density	—	AASHTO T 180, method D[1] or T 99, method C[1]	1 per soil type but not less than 1 per	"	"	"
		Compaction	—	AASHTO T 310 or other approved procedures	1 per 6000 yd^2 but not less than 1 per layer	In-place	—	Before placing next layer

(1) Minimum of 5 points per proctor

Table 204-1 (continued)
Sampling and Testing Requirements

Material or Product	Type of Acceptance (Subsection)	Characteristic	Category	Test Methods Specifications	Sampling Frequency	Point of Sampling	Split Sample	Reporting Time
Earth embankment (204.11, Compaction A)	Measured and tested for conformance (106.04)	Classification	—	AASHTO M 145	1 per soil type	Source of Material	Yes, when requested	Before using in work
		Moisture-density	—	AASHTO T 180, method D[1] or T 99, method C[1]	1 per soil type but not less than 1 per 13,000 yd^3	"	"	"
		Compaction	—	AASHTO T 310 or other approved procedures	1 per 3500 yd^2 but not less than 1 per layer	In-place	—	Before placing next layer
Top of subgrade (204.11 Compaction A)	Measured and tested for conformance (106.04)	Compaction	—	AASHTO T 310 or other approved procedures	1 per 2500 yd^2	In-place	—	Before placing next layer

(1) Minimum of 5 points per proctor.

Table 204-2
Construction Tolerances

	Tolerance Class [a]												
	A	**B**	**C**	**D**	**E**	**F**	**G**	**H**	**I**	**J**	**K**	**L**	**M**
Roadbed width (ft)	+0.5	+0.5	+1.0	+1.0	+1.0	+1.0	+1.5	+1.0	+2.0	+2.0	+2.0	+2.0	+2.0
Subgrade elevation (ft)	±0.1	±0.2	±0.2	±0.5	±0.5	±1.0	±1.0	±1.5	±2.0	±3.0	±2.0	±3.0	(c)
Centerline alignment (ft)	±0.2	±0.2	±0.5	±0.5	±1.0	±1.0	±1.5	±1.5	±2.0	±3.0	±3.0	±5.0	(c)
Slopes, excavation, and embankment (% slope[b])	±3	±5	±5	±5	±5	±5	±10	±10	±10	±10	±20	±20	±20

(a) Maximum allowable deviation from construction stakes and drawings.
(b) Maximum allowable deviation from staked slope measured from slope stakes or hinge points.
(c) Unless otherwise shown the centerline alignment and subgrade elevation, as built, have no horizontal curves with a radius of less than 80 feet, and no vertical curves with a curve length of less than 80 feet when the algebraic difference in the grade change is less than 10 percent, or a curve length of less than 100 feet when the algebraic difference of the grade change is greater than or equal to 10 percent. The centerline grade is not to exceed 20 percent in 100 feet of length.

303 - Road Reconditioning

303.01_nat_us_03_02_2005

303.01 Work.

Delete and add the following:

This work consists of reconditioning ditches, shoulders, roadbeds, cattleguards, asphalt surfaces, and aggregate surfaces.

303.05_06_us_08_21_2008

Replace with the following:

303.05 Roadbed Reconditioning. Repair soft and unstable areas according to Subsection 204.07. Remove all organic and deleterious material larger than 4 inches from the scarification depth specified. Dispose of waste according to Subsection 204.14. Scarify to the width and depth shown on the drawings, remove surface irregularities, and shape to provide a uniform surface. Finish earth surfaces to within 0.2 feet and rock surfaces to within 0.10 feet of the required line, cross-section, and grade.

Dispose of rock larger than 4 inches brought to the surface during scarification in areas designated on the plans.

For portions of roads not requiring scarification, the roadbed may contain rocks larger than 4 inches provided they do not extend above the finished roadbed surface. Reduce in place or remove rock extending above the finished roadbed surface. Dispose of removed rock in areas designated on the plans.

322 - Minor Aggregate Courses

322.00_nat_us_10_14_2011

Description

322.01 This work consists of constructing one or more courses of aggregate on a prepared surface. Work includes producing aggregate by grid rolling, screening, or crushing methods, or placing pit-run or Government-furnished aggregate.

Surface aggregate grading is designated as shown in Table 703-3.

Subbase and base aggregate grading is designated as shown in Table 703-2.

Screened aggregate grading is designated as shown in Table 703-16.

Material

322.02 Conform to the following Subsections:

Aggregate	703.05
Water	725.01

Construction Requirements

322.03 General. Prepare the surface on which the aggregate course is placed according to Section 204 or 303 as applicable.

Request approval of the roadbed in writing before placing aggregate.

Develop, haul, and apply water in accordance to Section 170.

Submit target values within the gradation ranges shown in Table 703-2 or 703-3 for the required grading. After reviewing the proposed target values the CO will determine the final values for the gradation and notify the Contractor in writing.

No quality requirements or gradation other than maximum size will be required for pit run and grid-rolled material. For grid rolling, use all suitable material that can be reduced to maximum size.

After processing on the road, remove all oversize material from the road and dispose of it as directed by the CO.

If the aggregate is produced and stockpiled before placement, handle and stockpiled according to Section 320. Establish stockpile sites at approved locations.

322.04 Mixing and Spreading. Mix the aggregate and adjust the moisture content to obtain a uniform mixture with a moisture content suitable for the specified compaction method. Spread and shape the mixture on the prepared surface in a uniform layer with no segregation of size, and to a loose depth that will provide the required compacted thickness.

Do not place in layers exceeding 6 inches in compacted thickness for aggregate base and surface courses or twice the maximum particle size for screened aggregate. When more than one layer is necessary, compact each layer according to Subsection 322.05 before placing the next layer. Route hauling and leveling equipment uniformly over the full width.

When placing aggregate over geotextile, place aggregate in a single lift to the full depth specified.

322.05 Compacting. Compact each layer full width. Roll from the sides to the center, parallel to the centerline of the road. Along curbs, headers, walls, and all places not accessible to the roller, compact the material with approved tampers or compactors.

Compact the aggregate using one of the following methods as specified:

Compaction A. Operating spreading and hauling equipment over the full width of the travelway.

Compaction B. Operate rollers and compact as specified in Subsection 204.11(a)(1).

Compaction C. Moisten or dry the aggregate to a uniform moisture content between 5 and 7 percent based on total dry weight of the mixture. Operate rollers and compaet as specified in Subsection 204.11(a)(1).

Compaction D. Compact to a density of at least 95 percent of the maximum density, as determined by AASHTO T 99, method C or D.

Compaction E. Removed.

Compaction F. Compact to a density of at least 95 per-cent of the maximum density, as determined by AASHTO T 180, method C or D.

Compaction G. Removed.

For all compaction methods, blade the surface of each layer during the compaction operations to remove irregularities and produce a smooth, even surface. When a density requirement is specified, determine the in place density and moisture content according to AASHTO T 310 or other approved test procedures.

322.06 Construction Tolerance. If grade finishing stakes are required, finish the surface to within ±0.10 feet from staked line and grade elevation.

If grade finishing stakes are not required, shape the surface to the required template and check the surface with a 10-foot straightedge. Defective areas are surface deviations in excess of 1/2 inch in 10 feet between any two contacts of the straightedge with the surface.

Correct all defective areas by loosening the material, adding or removing material, reshaping, and compacting.

Ensure that the compacted thickness is not consistently above or below the specified thickness. The maximum variation from the compacted specified thickness is ½ inch.

Ensure that the compacted width is not consistently above the specified width. The maximum variation from the specified width will not exceed +12 inches at any point.

322.07 Maintenance. Maintain the aggregate course to the correct line, grade, and cross-section by blading, watering, rolling, or any combination thereof until placement of the next course. Correct all defects according to Subsection 322.06.

322.08 Acceptance. See Table 322-1 or Table 322-2 as applicable, for sampling and testing requirements.

Aggregate gradation and surface course plasticity index will be evaluated under Subsection 106.04. If the aggregate is obtained from a Government stockpile then the above characteristics will be evaluated under Subsection 106.02. Other aggregate quality properties will be evaluated under Subsections 106.02 and 106.04. Placement of aggregate courses will be evaluated under Subsections 106.02 and 106.04.

The allowable upper and lower aggregate gradation limits are the Target Value plus or minus the allowable deviations shown in Tables 703-2 and 703-3.

The allowable upper and lower Plasticity index limits for surface courses are stated in 703.05(b).

Preparation of the surface on which the aggregate course is placed will be evaluated under Section 204 or 303 as applicable.

Measurement

322.09 Measure the Section 322 items listed in the bid schedule according to Subsection 109.02 and the following as applicable.

Measure square yard width horizontally to include the top of aggregate width including designed widening. Measure the square yard length horizontally along the centerline of the roadway.

If the measurement for aggregate is by cubic yard using contract quantities then measure aggregate by the cubic yard in-place once compacted, otherwise measurement for aggregate by the cubic yard is measured by the cubic yard in the hauling vehicle.

Measure thickness perpendicular to the grade of the travelway.

Measure width perpendicular to the centerline.

Payment

322.10 The accepted quantities will be paid at the contract price per unit of measurement for the Section 322 pay items listed in the bid schedule. Payment will be full compensation for the work prescribed in this Section. See Subsection 109.05.

Table 322-1
Sampling and Testing Requirements

Material or Product	Type of Acceptance (Subsection)	Characteristic	Category	Test Methods Specifications	Sampling Frequency	Point of Sampling	Split Sample	Reporting Time
Aggregate source quality 703.05	Measured and tested for conformance (106.04 & 105)	LA abrasion (coarse)	—	AASHTO T 96	1 per type & source of material	Source of material	Yes, when requested	Before using in work
		Sodium sulfate soundness loss (coarse & fine)	—	AASHTO T 104	"	"	"	"
		Durability index (coarse & fine)	—	AASHTO T 210	"	"	"	"
		Fractured faces	—	ASTM D 5821	"	"	"	"
Subbase, Base, and Surface courses	Measured and tested for conformance (106.04)	Sample	—	AASHTO T 2	2 per day	From windrow or roadbed after processing or from approved crusher sampling device	Yes	48 hours

Table 322-1 (continued)
Sampling and Testing Requirements

Material or Product	Type of Acceptance (Subsection)	Characteristic	Category	Test Methods Specifications	Sampling Frequency	Point of Sampling	Split Sample	Reporting Time
Subbase, Base, and Surface	Measured and tested for conformance (106.04)	Moisture-density Method D	—	AASHTO T 99 (1)	1 per type and source of material	Source of material	Yes, when requested	Before using in work
			—		"	"	"	"
		Moisture-density Method F	—	AASHTO T 180(1)	"	"	"	"
			—		"	"	"	"
		In-place density & moisture content	—	AASHTO T 310 or other approved procedures	3 per day	In-place	—	Before placing next layer

Table 322-2
Sampling and Testing Requirements

Material or Product	Type of Acceptance (Subsection)	Characteristic	Category	Test Methods Specifications	Sampling Frequency	Point of Sampling	Split Sample	Reporting Time
Screened Aggregate	Measured and tested for conformance (106.04)	Sample	—	AASHTO T 2	2 per day	From windrow or roadbed after processing or from approved crusher sampling device	Yes	48 hours

703 - Aggregate

703.05_nat_us_08_14_2009

Delete 703.05 and replace with the following:

703.05 Subbase, Base, Surface Course, and Screened Aggregate.

(a) Subbase or base aggregate. Furnish hard, durable particles or fragments of crushed stone, crushed slag, or crushed gravel conforming the following:

(1) Gradation	Table 703-2
(2) Liquid limit, AASHTO T 89	25 max.
(3) Plastic limit, AASHTO T 90	Nonplastic
(4) Los Angeles abrasion, AASHTO T 96	40% max.
(5) Sodium sulfate soundness loss (5 cycles), AASHTO T 104	12% max.
(6) Durability index (coarse), AASHTO T 210	35 min.
(7) Durability index (fine), AASHTO T 210	35 min.
(8) Fractured faces, ASTM D 5821	50% min.
(9) Free from organic matter and lumps or balls of clay	

Do not use material that breaks up when alternately frozen and thawed or wetted and dried.

Obtain the aggregate gradation by crushing, screening, and blending processes as necessary. Fine aggregate, material passing the No. 4 sieve, shall consist of natural or crushed sand and fine mineral particles.

(b) Surface course aggregate. Furnish hard, durable particles or fragments of crushed stone, crushed slag, or crushed gravel conforming the following:

(1) Gradation	Table 703-3
(2) Liquid limit, AASHTO T 89	35 max.
(3) Plastic Index, AASHTO T 90	
a) If the percent passing the No. 200 sieve is less than 12%	2 to 9
b) If the percent passing the No. 200 sieve is greater than 12%	Less than 2
(4) Los Angeles abrasion, AASHTO T 96	40% max.
(5) Sodium sulfate soundness loss (5 cycles), AASHTO T 104	12% max.
(6) Durability index (coarse), AASHTO T 210	35 min.
(7) Durability index (fine), AASHTO T 210	35 min.
(8) Fractured faces, ASTM D 5821	75% min.
(9) Free from organic matter and lumps or balls of clay	

Do not use material that breaks up when alternately frozen and thawed or wetted and dried.

Do not furnish material that contains asbestos fibers.

Obtain the aggregate gradation by crushing, screening, and blending processes as necessary. Fine aggregate, material passing the No. 4 sieve, shall consist of natural or crushed sand and fine mineral particles.

(c) Screened aggregate – Furnish hard, durable particles or fragments of stone, slag, or gravel conforming the following:

(1) Gradation	Table 703-16
(2) Plastic Index, AASHTO T 90	Less than 9
(3) Los Angeles abrasion, AASHTO T 96	55% max.
(4) Free from organic matter and lumps or balls of clay.	

Do not use material that breaks up when alternately frozen and thawed or wetted and dried.

Obtain the aggregate gradation by crushing, screening, and blending processes as necessary.

Delete Table 703-2 and replace with the following:

Table 703-2
Target Value Ranges for Subbase and Base Gradation

Sieve Size	Percent by Mass Passing Designated Sieve (AASHTO T 27 and T 11)				
	Grading Designation				
	A (Subbase)	B (Subbase)	C (Base)	D (Base)	E (Base)
2½ inch	100				
2 inch	97 – 100	100	100		
1½ inch		97 – 100			
1 inch	65 – 79 (6)		80 – 100 (6)	100	
3/4 inch			64 – 94 (6)	86 – 100 (6)	100
1/2 inch	45 – 59 (7)				
3/8 inch			40 – 69 (6)	51 – 82 (6)	62 – 90 (6)
No. 4	28 – 42 (6)	40 – 60 (8)	31 – 54 (6)	36 – 64 (6)	36 – 74 (6)
No. 40	9 – 17 (4)			12 – 26 (4)	12 – 26 (4)
No. 200	4.0 – 8.0 (3)	4.0 – 12.0 (4)	4.0 –7.0 (3)	4.0 – 7.0 (3)	4.0 – 7.0 (3)

( ) The value in the parentheses is the allowable deviation (±) from the target values..

Delete Table 703-3 and replace with the following:

Table 703-3
Target Value Ranges for Surface Gradation

Sieve Size	Percent by Mass Passing Designated Sieve (AASHTO T 27 and T 11)					
	Grading Designation					
	F	G	H	S	T	U
1 1/2 inch	100			100		
1 inch	97-100	100		72 – 92 (6)	100	
3/4 inch	76-89 (6)	97 - 100	97 - 100			100
1/2 inch					71 – 91 (6)	
3/8 inch	56-68 (6)	70 – 80 (6)	80 – 92 (6)	51 – 71 (6)		71 – 90 (6)
No. 4	43-53 (7)	51 – 63 (7)	58 – 70 (7)	36 – 53 (7)	43 – 60 (7)	50 – 68 (7)
No. 8				26 – 40 (6)	30 – 46 (6)	34 – 51 (6)
No. 16	23-32 (6)	28 – 39 (6)	28 – 40 (6)			
No. 40	15-23 (5)	19 – 27 (5)	16 – 26 (5)	14 – 25 (5)	16 – 28 (5)	19 – 30 (5)
No. 200	10.0-16.0 (4)	10.0 – 16.0 (4)	9.0 – 14.0 (4)	8.0 – 15.0 (4)	8.0 – 15.0 (4)	8.0 – 15.0 (4)

( ) The value in the parentheses is the allowable deviation (±) from the target values.
If the plasticity index (PI) is greater than 0, the TV range for the No. 200 sieve size is 8-12 (4).

Add Table 703-16:

Table 703-16

Gradation Requirements for Screened Aggregate

Sieve Size	Percent by Mass Passing Designated Sieve (AASHTO T 27 and T 11)						
	Grading Designation						
	L	M	N	O	P	Q	R
6 inch	100	100					
4 inch			100	100			
3 inch					100	100	
2 inch							100
No. 4		15-45		15-45		15-45	

703.07_nat_us_03_02_2005

Table 703-2 Correction

Include the following substitution

In Table 703-2, delete the "436 – 74 (6)" percent by mass passing for grading E (base) No. 4 sieve size and substitute "36 – 74 (6)."

Table 703-2 Correction

Include the following substitution

In Table 703-2, delete the "436 – 74 (6)" percent by mass passing for grading E (base) No. 4 sieve size and substitute "36 – 74 (6)."

703.10_nat_us_04_11_2011

703.10(e) Flakiness Index.

Delete and replace with the following:

Flakiness Index, FLH T 508 30% max.

703.10(i) Adherent Coating.

Add the following:

Adherent coating on the aggregate, FLH T 512 0.5% max.

718 - Traffic Signing and Marking Material

718.05_nat_us_08_05_2009

718.05 Aluminum Panels

Delete the third paragraph and replace with the following:

Clean, degrease and properly prepare the panels according to methods recommended by the sheeting manufacturer. Conversion coatings will conform to ASTM B-921 or ASTM B-449.