UNITED STATES DEPARTMENT OF AGRICULTURE

FOREST SERVICE – REGION SIX

SIUSLAW NATIONAL FOREST

CENTRAL COAST RANGER DISTRICT

LANE COUNTY

PLANS FOR PROPOSED

CEDAR THIN TIMBER SALE

ROADS

ROAD NO.	FROM/TO	LENGTH (MILES)	TYPE OF WORK
2500	M.P. 3.19/M.P. 4.72	1.53	Reconstruction
2553	FS ROAD 2500/COUNTY ROAD 5084	1.55	Reconstruction
2570	FS ROAD 2500/M.P. 2.50	2.50	Reconstruction

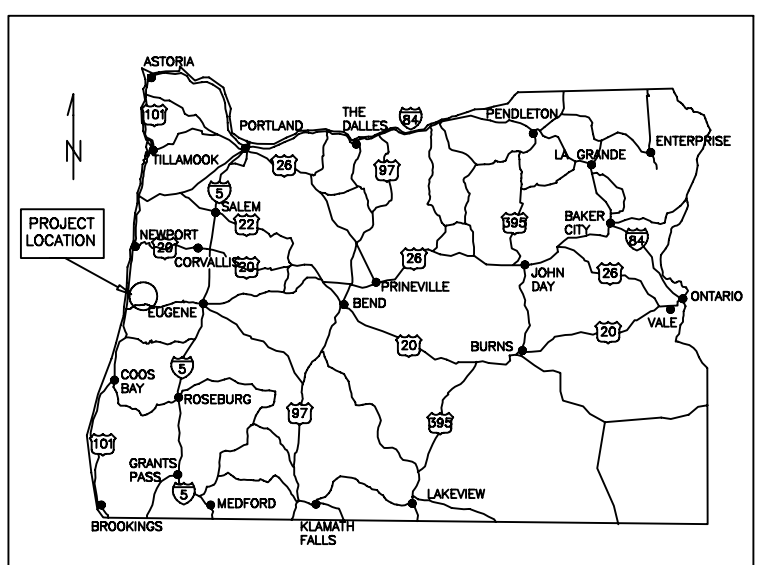

KEY MAP OF OREGON SHOWING LOCATION OF PROJECT

INDEX TO SHEETS

NO.	DESCRIPTION
1	TITLE SHEET
2	VICINITY MAP
3	ESTIMATE OF QUANTITIES
4	ROAD STRUCTURE DETAILS
5	DRAINAGE CONSTRUCTION DETAILS
6	DRAINAGE LISTING
7	ROADSIDE BRUSHING DETAILS
8	GENERAL DEVELOPMENT NOTES
9	THREE BUTTES PIT DEVELOPMENT
10	WORK DESCRIPTION

Designed by	
Designer	Date
Reviewed by:	
Reviewer	Date
Assistant Dev. Engineer	Date
Recommended by:	
Zone Engineer	Date
Approved by:	
Line Officer	Date
Forest Engineer	Date

CEDAR THIN TIMBER SALE
VICINITY MAP

SHEET	OF
2	10

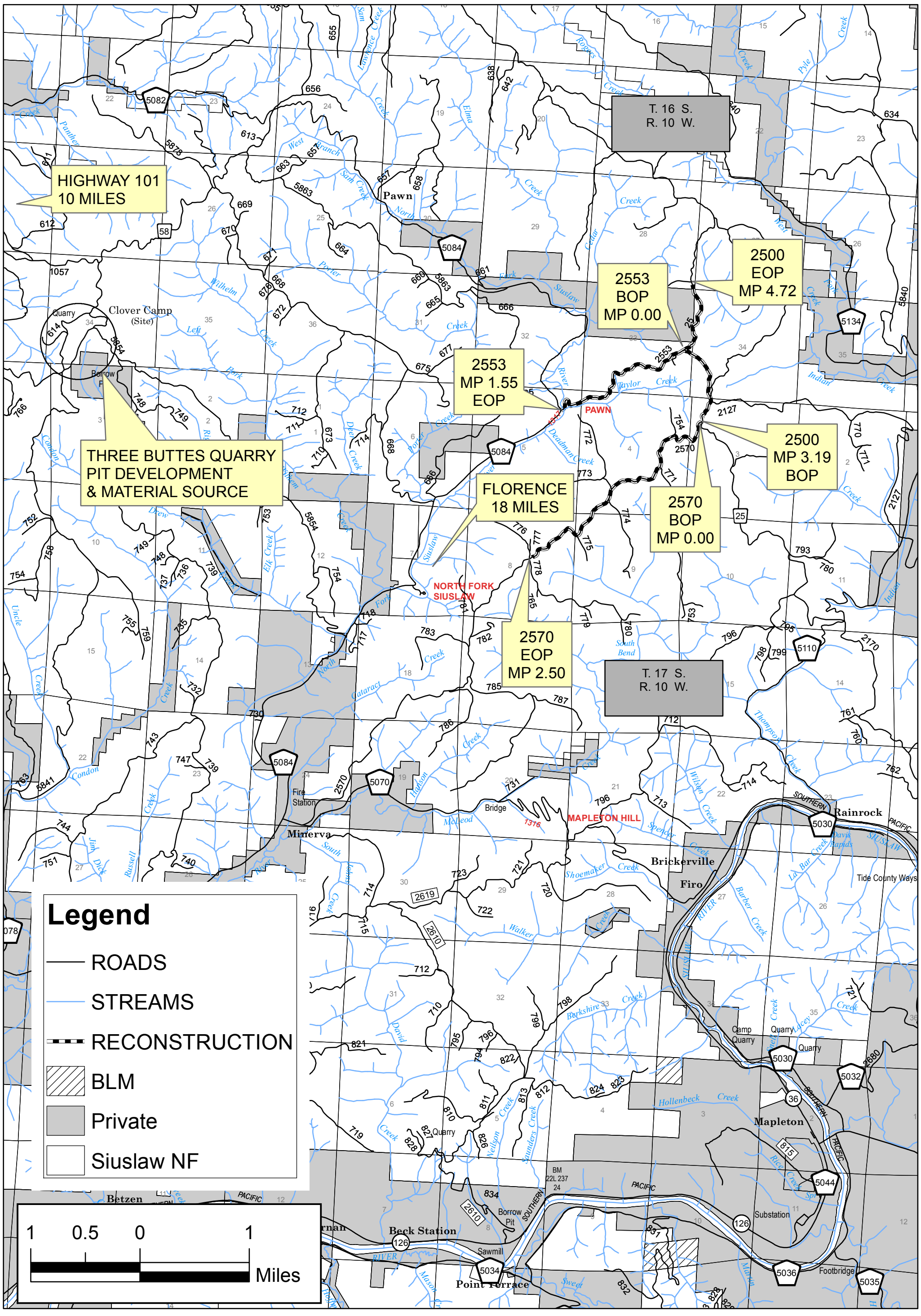

ESTIMATE OF QUANTITIES						CEDAR THIN TIMBER SALE	SHEET 3	OF 10

ROAD NUMBER			2500	2553	2570	GENERAL NOTES
PROJECT LENGTH (MILES)			1.53	1.55	2.50	
ITEM NO.	DESCRIPTION	UNIT	QUANTITIES	QUANTITIES	QUANTITIES	* Denotes Contract Quantities
15101	Mobilization	Lump Sum		ALL		Includes fire protection, equipment cleaning (one time plus additional for FS road 2553) and traffic control.
20105	Clearing and Grubbing, disposal of tops and limbs (f(1)), logs (i), stumps (f(1))	Lump Sum			ALL	Disposal site clearing.
20253	Removal of individual tree, miscellaneous: disposal of tops & limbs (f(1)), logs (i)	Each			1	
20301	Removal, culverts	Each			4	Disposal method (a) remove from project.
20419	Drainage Excavation, type Leadout Ditch	Foot		60		
20477	Drainage Excavation, type inlet/catchbasin	Lump Sum	ALL			Excavation required to find and clean out inlet.
23051A	Roadside brushing, disposal method 1	Mile	1.53		2.50	Disposal method - scattering.
23051B	Roadside brushing, disposal method 1	Mile		1.55		Disposal method - scattering a minimum of 15' from road edge.
25101	Placed riprap, class 3	Cubic Yard*		6	11	Government Source/In-Place Compacted Quantities.
30359	Roadway reconditioning, compaction E	Mile		1.55	2.50	Scarify only potholes and irregular surfaces to 6" maximum depth except where indicated on description of work. Includes all existing turnouts and curve widening, cleaning of asphalt surfaces, bridge deck and structure. See sheet 4 of 10 for ditch and roadway dimensions. Grubbing and disposal of all vegetation and root masses within the road bed and in the ditch is required. Haul all material from ditch reestablishment and slough and slide removal to designated disposal area. No ditch disturbance within 70' of bridge.
32154	Stockpiled aggregate, grading B	Cubic Yard		8210		Government Source - Loose yards. Crush, haul and stockpile in Area D (see sheets 8 & 9 of 10). Supplemental funding as described in provision C5.215#.
32207B	Subbase, grading B, compaction method B	Cubic Yard*		1852	1571	Government Source- Three Buttes Quarry (see sheets 8 & 9 of 10. In-Place Compacted Quantities. Culvert sites include 12" compacted depth over installation.
60278	24-inch corrugated polyethylene pipe, type C, method B	Foot		4	170	All excavation is included. Excavation below existing grade line may be required for culvert replacements. C= corrugated
60654	24-inch full circle polyethylene outlet pipe, type C	Foot			20	Includes all anchors, hardware, materials and labor.
60708	Cleaning culverts in place	Each	1	1		
62509	Mulching, Dry Method	Lump Sum		ALL		Mulch all disturbed soil with weed free straw. Includes disposal areas.
63307	Delineators, type 2	Each			2	Carsonite with yellow rectanglular reflective sticker. Install according to MUTCD Manual.
63359	Installation of signs (Government furnished)	Each		1		Install existing sign according to MUTCD manual. Purchaser provides post and all hardware.
65102	Pit and Quarry Development	Lump Sum		ALL		Develop Three Buttes Quarry as shown on sheets 8 & 9 of 10.

REMARKS:

1) Disposal Areas : 6' Maximum height of material, 1V:2H slopes, shape to drain & reconstruct ditchline between road and disposal site. Disposal area locations will be flagged by the Contracting Officer prior to any material placement and are identified in Description of Work.

2) Payment will be made on actual work performed as described in FP-03 109.01 unless otherwise noted.

3) See page 8 of 10 for wildlife restrictions on rock production. See Timber Sale provisions and specifications for all other daily and seasonal restrictions.

4) All utility locates, permits and water rights are the responsibility of the contractor.

5) **Noxious Weed Mitigation Requirements: Special restrictions apply to FS Road 2553** due to noxious weed presence. No Work shall start prior to July 1, 2013 . Work shall commence from County Road 5084 end and proceed towards FS Road 2500 end. Project vehicles shall be parked in areas identified by C.O. Slash shall be scattered a minimum of 15' from road edge. Equipment shall be washed and approved by C.O. prior to moving elsewhere.

CEDAR THIN TIMBER SALE
ROAD STRUCTURE DETAILS

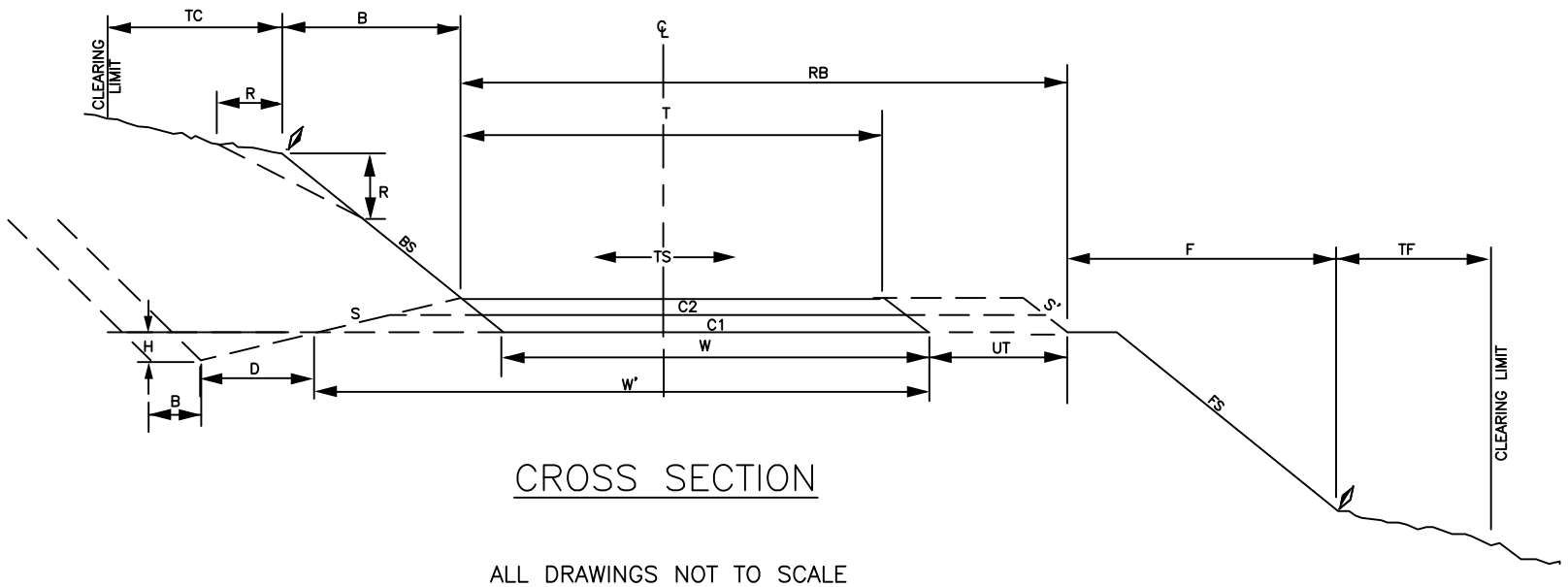

CROSS SECTION

ALL DRAWINGS NOT TO SCALE

TURNOUT AND TURNAROUND SYMBOLS

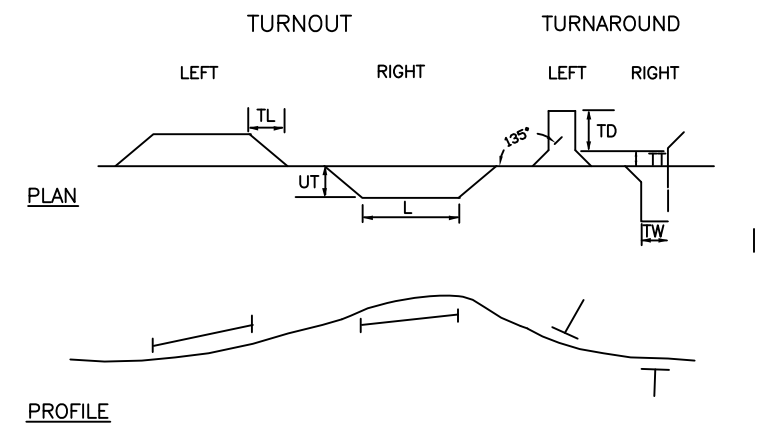

ROAD NUMBER	SEGMENT	STATION or MILEPOST	TO STATION or MILEPOST	TRAVELED WAY WIDTH (FT)	GRADING: CONSTRUCTION TOLERANCE	OUTSLOPE (O) INSLOPE (I) CROWN (C) %	ROADBED WIDTH (FT)		DITCH DIMENSIONS (FT)			TURNOUT: WIDTH (FT)	TRANSITION LENGTH (FT)	LENGTH (FT)	TURN AROUND: TAPER (FT)	WIDTH (FT)	LENGTH (FT)	PAVEMENT STRUCTURE: GRADATION		COMPACTED DEPTH (IN)		SLOPE RATIO			SHOULDER ROCK: DEPTH (IN)	SLOPE RATIO	WIDTH (IN)	GRADATION
				T		TS	W	W'	B	D	H	UT	TL	L	TT	TW	TD	C1	C2	C1	C2	S	S'	FS	IN		IN	
2500		3.19	4.72	14	C		15	EX	0	2	1	8	25	50	EX	EX	EX			HMAC		EX	EX					
2553		0.00	0.03	14	C		15	EX	0	2	1	8	25	50	EX	EX	EX			HMAC		EX	EX					
2553		0.03	1.48	14	C	C−4	15	EX	0	2	1	8	25	50	EX	EX	EX	B		4		1V:2H						
2553		1.48	1.55	14	C		15	EX	0	2	1	8	25	50	EX	EX	EX			HMAC		EX	EX					
2570		0.00	2.50	14	C	C−4	15	EX	0	2	1	8	25	50	EX	EX	EX	B		4		1V:2H						

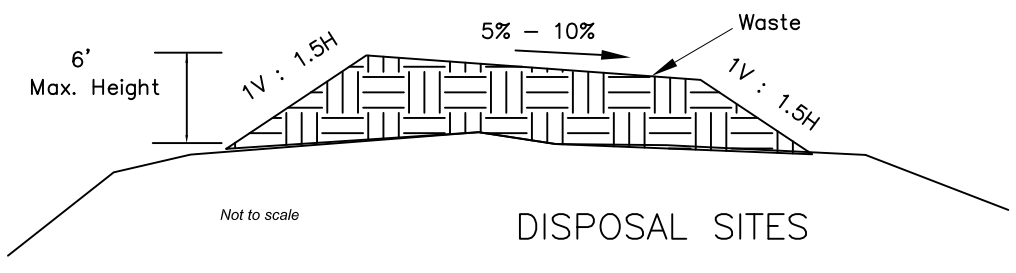

DISPOSAL SITES

NOTES

CO will flag waste area limits

Layer place, equipment compact material.

Place weed free straw mulch on completed waste area, 2" minimum depth, Pay Item 62509.

FS Road 2570 MP 1.55 – clear site of vegetation, place in windrow along bottom of waste area.

GENERAL NOTES

1. COMPACTED DEPTHS OF C1 & C2 PERTAIN TO SURFACING ONLY WHERE WORK IS SPECIFIED IN WORK DESCRIPTION. SEE DETAIL SHEETS FOR DEPTHS OF OTHER ROCK REQUIRED.
2. SURFACE CURVE WIDENING, TURNOUTS AND TURNAROUNDS TO THE SAME DEPTH AS THE ROADBED UNLESS OTHERWISE SHOWN ON THE PLANS.
3. EX = MATCH EXISTING DIMENSIONS.
4. MAINTAIN EXISTING SUPER ELEVATION, CROWN AND SLOPE OF ROAD. CREATE SMOOTH TRANSITIONS TO EXISTING ROAD SURFACE AND PRISM.
5. DO NOT UNDERCUT BACKSLOPE WHEN CLEANING AND/OR RECONSTRUCTING DITCH LINES.
6. REMOVE ALL BERMS, EXISTING OR CREATED, TO ALLOW DRAINAGE OF WATER FROM TRAVELED WAY, UNLESS OTHERWISE DESIGNATED TO REMAIN.

CEDAR THIN TIMBER SALE
DRAINAGE CONSTRUCTION DETAILS

SHEET NO.	TOTAL SHEETS
5	10

CULVERT INSTALLATION TYPES

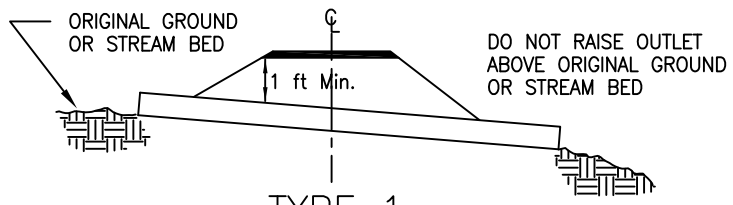

TYPE 1

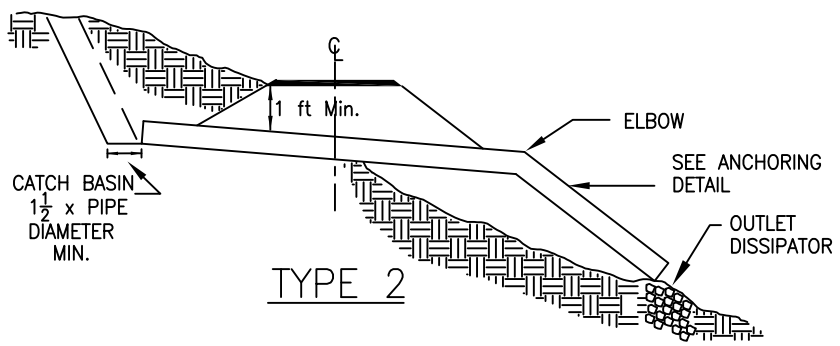

TYPE 2

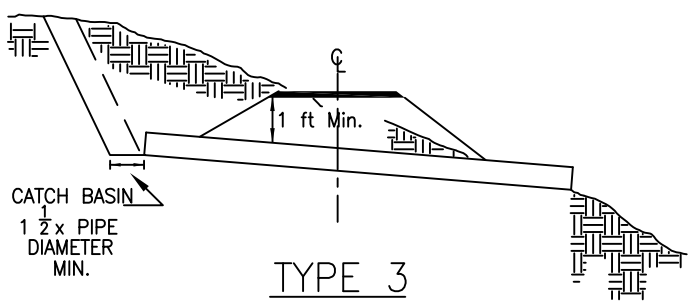

TYPE 3

ALL FILLS SHALL BE CONSTRUCTED WITH A MINIMUM SLOPE OF 1V:1.5H.

OUTLET DITCH

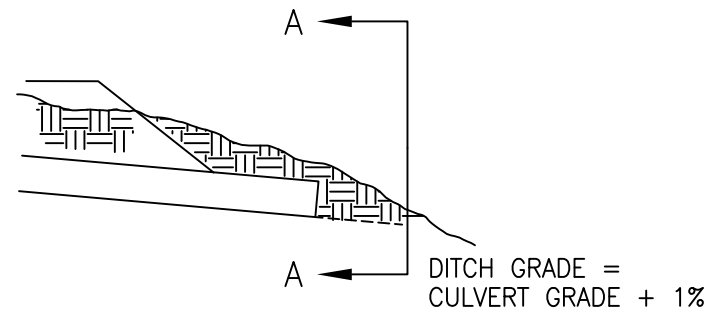

SECTION A–A

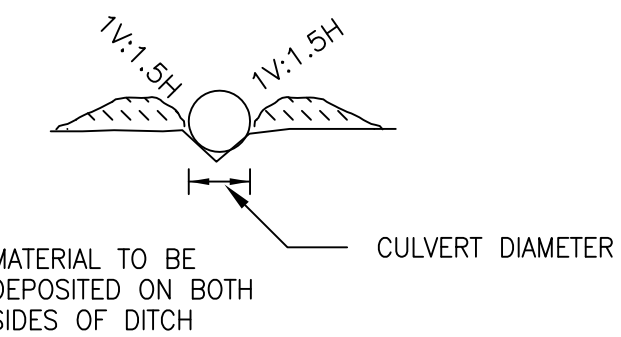

CULVERT INSTALLATION DETAIL

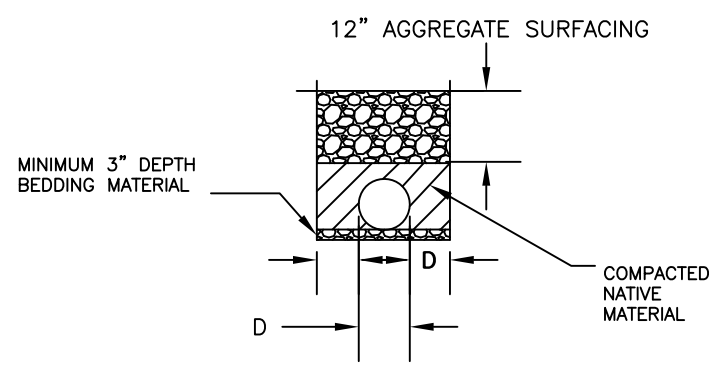

OUTLET DISSIPATOR DETAIL

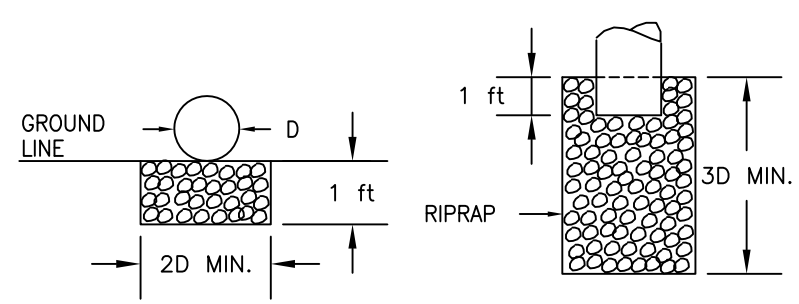

APRON SURFACE MUST CONFORM TO SHAPE OF EXISTING GROUND AND BE LEFT ROUGH TO REDUCE WATER VELOCITY. SEE DRAINAGE LISTING FOR ACTUAL QUANTITIES.

FLEX ELBOW

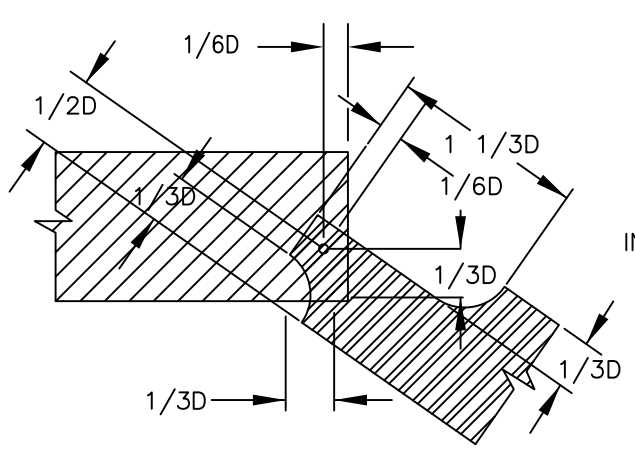

SIDE VIEW

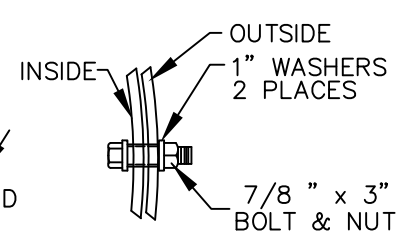

BOLT DETAIL

ANCHOR DETAILS

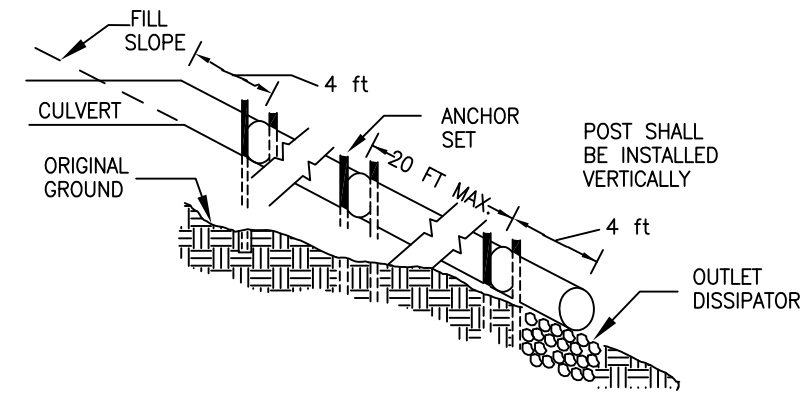

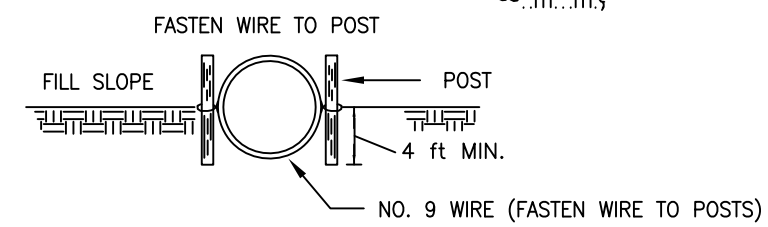

NOTE:
3 FT DIAMETER AND LARGER DOWNPIPE SHALL BE HALF BURIED.
ANCHOR SETS SHALL CONSIST OF TWO 6 FT STEEL FENCE POSTS (AASHTO M 281) AND NO. 9 GALVANIZED WIRE. 3 STRANDS OF WIRE SHALL BE TWISTED TOGETHER AND ENCOMPASS THE ENTIRE CIRCUMFERENCE OF THE PIPE.

DITCH DAM PLAN VIEW

TYPE 2 & 3 CULVERT INSTALLATION

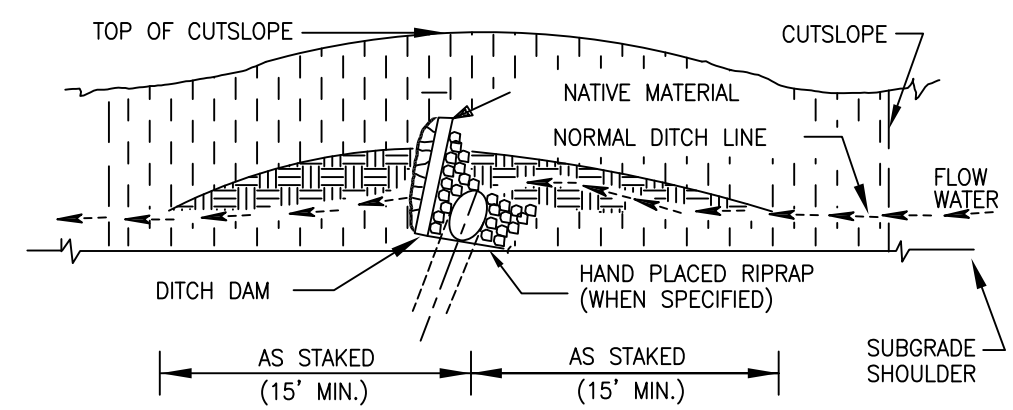

SKEW DIAGRAM

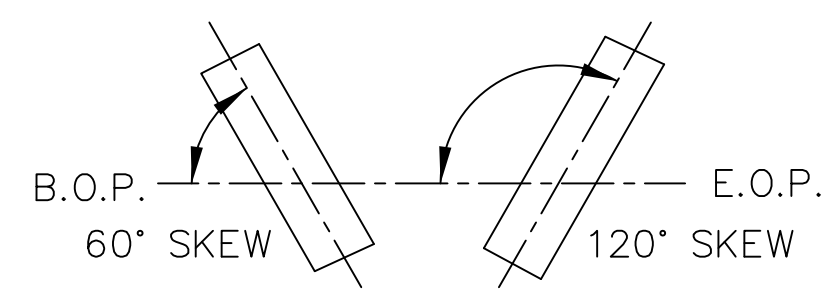

B.O.P. = BEGINNING OF PROJECT
E.O.P. = END OF PROJECT

CEDAR THIN TIMBER SALE
DRAINAGE LISTING

Sheet	Total
6	10

STA or MP	Designed: Plastic Pipe Diameter (in)	Plastic Pipe Length (ft)	Plastic Spillway Diameter (in)	Plastic Spillway Length (ft)	Plastic Spillway Full Circle	Plastic Spillway Half Round	Corrugated Metal Pipe Diameter (in)	Corrugated Metal Pipe Length (ft)	Corrugated Metal Full Circle Outlet Diameter (in)	Corrugated Metal Full Circle Outlet Length (ft)	Corrugated Metal Full Circle Outlet Full Circle	Corrugated Metal Full Circle Outlet Half Round	Installation Details: Grade (%)	Skew (deg)	Anchor Assembly	Type	Corrugated Metal Outlet Connection Flex	Corrugated Metal Outlet Connection Elbow	Riprap- CY: Hand Placed Inlet CY	Hand Placed Outlet CY	Machine Placed Inlet CY	Machine Placed Outlet CY	Dumped Inlet CY	Dumped Outlet CY	Remarks
2553																									
1.02	24	4											EX	EX							3	3			Remove damaged inlet . Install 4' new CPP, armor inlet and add dissipator at outlet.
Road Total		4																			3	3			
2570																									
0.32	24	60											EX	60								3			Remove existing. Install new CPP and dissipator.
1.64	24	30											EX	90								5			Remove existing. Install new CPP and dissipator.
1.86	24	40											EX	60								3			Remove existing. Install new CPP and dissipator.
2.48	24	40	24	20									EX	60											Remove existing. Install new CPP and outlet pipe.
Road Total		170		20																	0	11			

Some culvert installations may require excavation below existing grade line.

ABBREVIATIONS:

CY = CUBIC YARD LS = LUMP SUM CMP = CORRUGATED METAL PIPE CPP = CORRUGATED PLASTIC PIPE

CEDAR THIN TIMBER SALE
ROADSIDE BRUSHING DETAILS
ROADS 2500, 2553 & 2570
TYPICAL SECTION

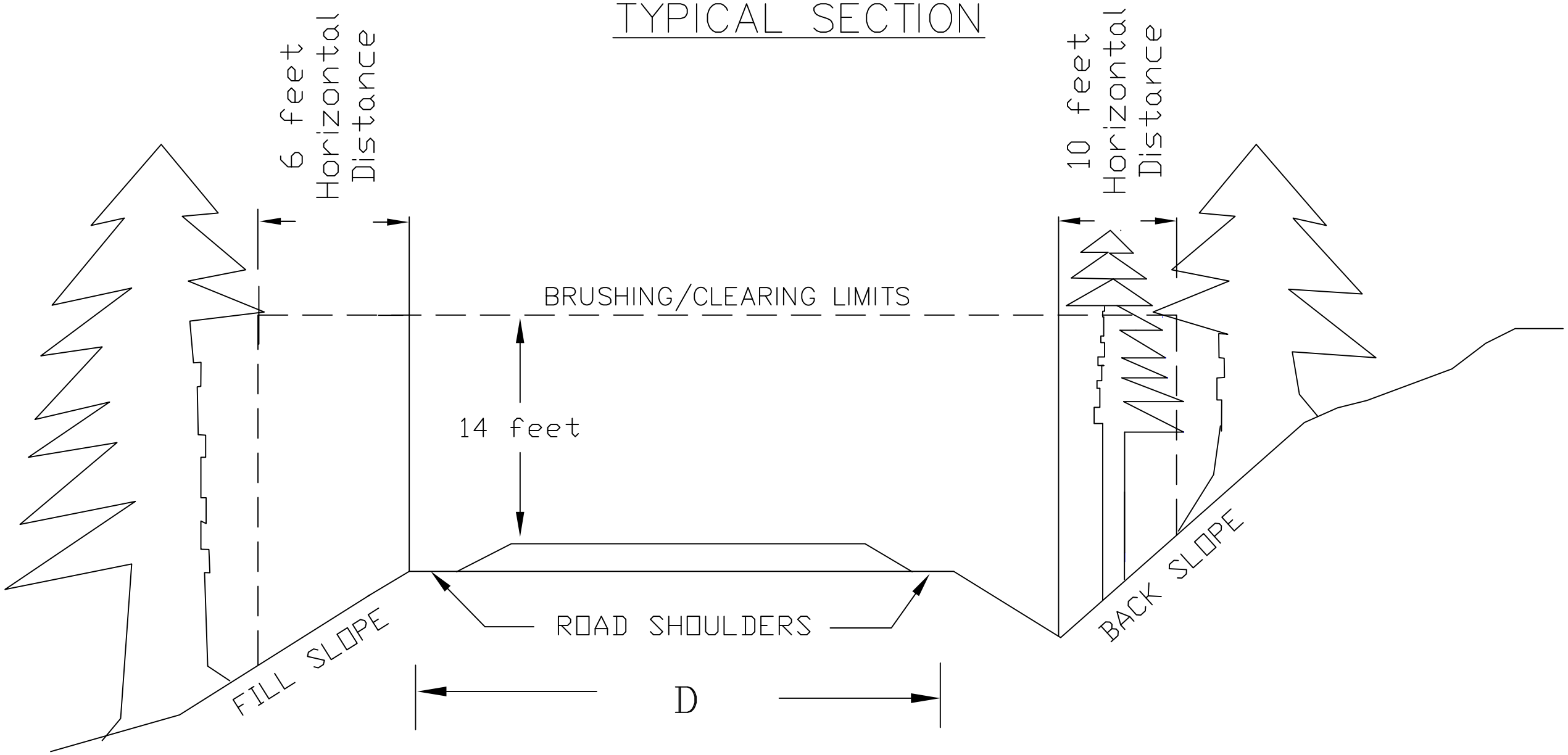

Grub stumps within "D" above or as noted on the work descriptions and haul to designated disposal areas.

Mechanical brushing may require manual limbing and manual scattering of machine cut material beyond the clearing limits.

DEVELOPMENT PLAN FOR THREE BUTTES QUARRY

SIUSLAW NATIONAL FOREST

CENTRAL COAST RANGER DISTRICT

T16S R11W SECTION 34 SW ¼

FOREST ROAD 58 M.P. 32.2

GENERAL DEVELOPMENT NOTES

- Submit an operating plan to the Contracting Officer for approval prior to any ground disturbing activities. Include bench configuration, access road location and other operational details related to rock production.
- Comply with applicable Federal, State and local regulations for the purchase, transport, storage and use of explosive material, including but not limited to MSHA regulation 30 CFR Part 56.
- Develop pit, crush aggregate and stockpile according to FP-03 Section 320 and FSSSS 322 and 651.
- In areas where disturbance will feasibly take place, remove at minimum, the first six inches of the top soil/rock layer prior to crushing activities. Deposit scalped material in an area of quarry that will remain undisturbed and not removed for use elsewhere.
- Clear and remove all overburden. Excavate Bench B towards the back/Bench A.
- Confine all crushing and pit excavation operations to the development limits and access roads, unless otherwise approved by the Contracting Officer.
- Develop and maintain equipment access to the quarry floor, all benches and the top of the quarry.
- All benches utilized or produced by this project shall have a minimum width of 20 feet. Finished faces shall have a maximum height of 30 feet, sloped at ¼ to 1 (H:V) or flatter and scaled of loose, overhanging blocks of rock.
- Blasting, if approved, shall be designed, loaded and shot in such a manner as to control and retain material within the area previously disturbed by past quarry operations, as well as minimize noise disturbance.
- Conform operations to Forest Service Industrial Precaution Class Levels guidelines. Ensure all equipment is maintained with the required fire tools.
- Outslope benches and the quarry floor to the satisfaction of the Contracting Officer.
- Reduce all over size material encountered during development and excavation, and utilize in aggregate. Up to 400 CY of oversize material may be stockpiled for future use, as approved by Contracting Officer.
- Remove from Forest Service lands all operational debris including but not limited to garbage, rubber, metal, paper or other objectionable material that is not consistent with a forested setting.
- Wildlife Restrictions are as follows:

  April 1 – August 5th – No rock crushing allowed.

  August 6th – September 15th – Rock crushing allowed between 2 hours after sunrise through 2 hours before sunset.

  March 1st – September 30th – No blasting allowed.

CEDAR THIN TIMBER SALE
THREE BUTTES PIT DEVELOPMENT

SHEET	TOTAL SHEETS
9	10

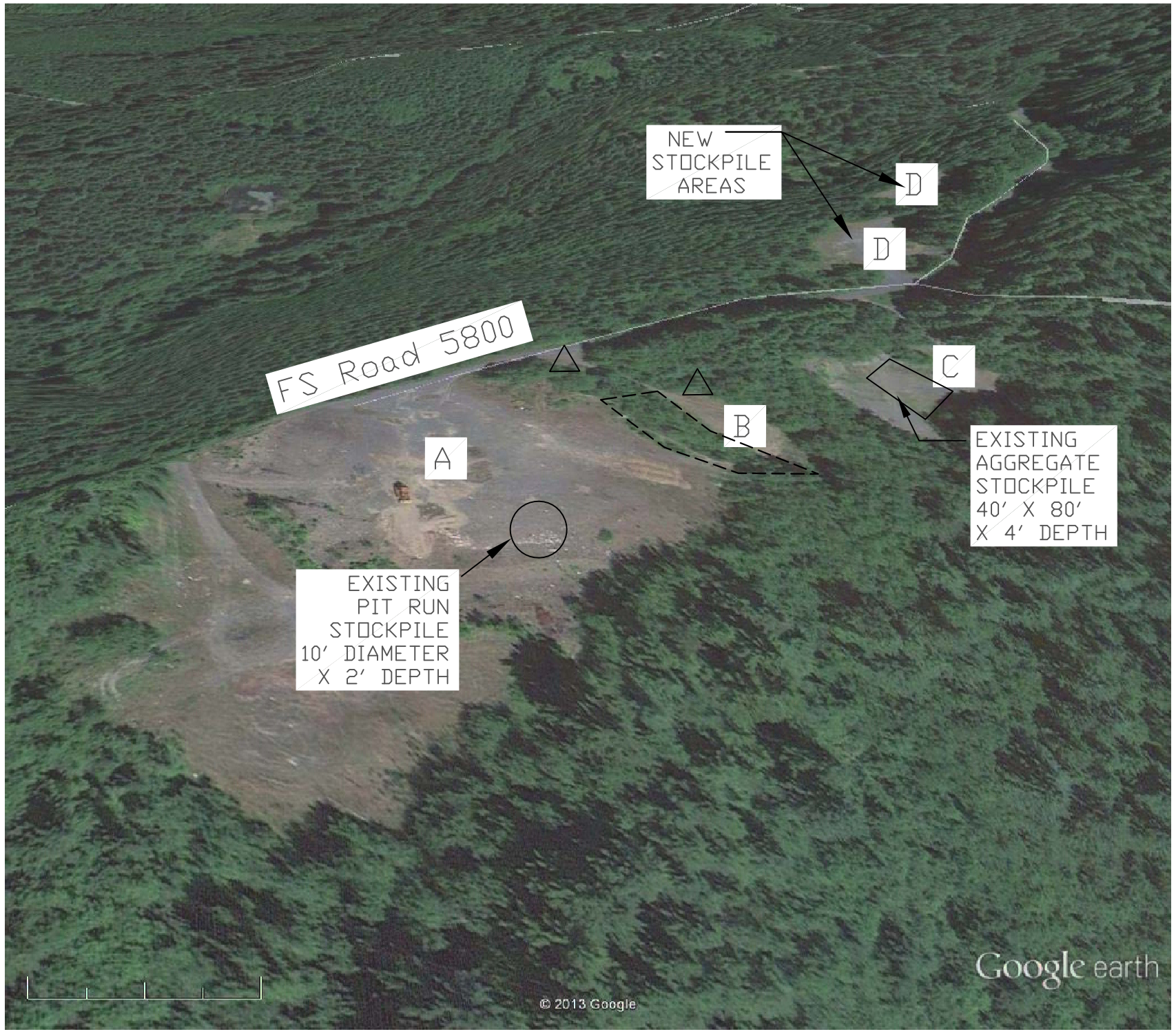

Google earth feet 900 meters 200 N

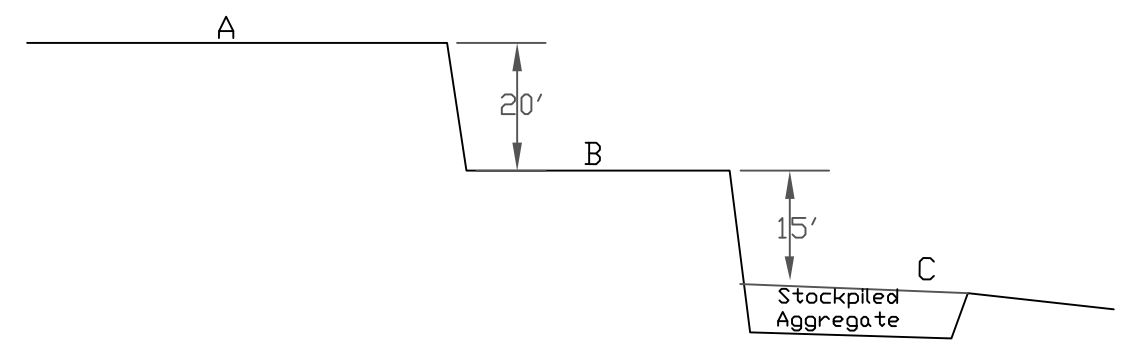

Excavation Limits

Place Clearing Slash

Not To Scale
Dimmensions Are
Approximate

CEDAR THIN TIMBER SALE

WORK DESCRIPTION

FS Road 2500

MILEPOST	QUANTITY	UNIT	PAY ITEM	WORK DESCRIPTION
M.P. 3.19				RP: Junction with FS Road 2570. Begin Project.
	0.21	Mile	23051A	Begin Roadside Brushing .
M.P. 3.40				Reference Point (RP): Junction 2127 right.
M.P. 3.99				RP: Junction 2553 left.
M.P. 4.28	1	LS	20477	Excavate to find inlet and clean culvert.
	1	Each	60708	
M.P. 4.50				Disposal Site right. Limited to 30-40 CY.
M.P. 4.72				RP: Junction with FS Road 2500652 left.
				End Roadside Brushing.
				End of Project.

FS Road 2553

MILEPOST	QUANTITY	UNIT		WORK DESCRIPTION
M.P. 0.00				RP: Junction with FS Road 2500. Begin Project.
	1.55	Mile	23051B	Begin Roadside Brushing.
	1.55	Mile	30359	Begin Roadway Reconditioning.
M.P. 0.01	1	Each	60708	Clean concrete culvert.
M.P. 0.03				RP: End of asphalt surface.
	1852	CY*	32207B	Begin placement of 4" compacted depth Grading B Aggregate.
M.P. 0.06	1	Each	63359	Reinstall T junction sign.
M.P. 0.13				Disposal Site left.
M.P. 1.02	4	Foot	60278	Replace/install 4' new pipe at inlet.
	6	CY*	25101	Riprap inlet and outlet.
M.P. 1.41	20	Foot	20419	Construct leadout ditch as staked by CO.
M.P. 1.44				Disposal Site right.
M.P. 1.48				RP: Begin asphalt surface.
				End placement of 4" compacted depth Grading B Aggregate.
M.P. 1.52	40	Foot	20419	Construct leadout ditches, 1 right/1 left as staked by CO.
M.P. 1.54 - 1.55				RP: Bridge.
M.P. 1.55				RP: Junction with County Road 5084.
				End Roadside Brushing.
				End Roadway Reconditioning.
				End of Project.

FS Road 2570

MILEPOST	QUANTITY	UNIT	PAY ITEMS	WORK DESCRIPTION
M.P. 0.00				RP: Junction with Forest Road 2500. Begin Project.
	2.50	Mile	23051A	Begin Roadside Brushing.
	2.50	Mile	30359	Begin Roadway Reconditioning.
M.P. 0.32	1	Each	20301	Remove existing pipe.
	60	Foot	60278	Install new pipe.
	10	CY*	32207B	Place 12" compacted depth Grading B Aggregate over culvert.
	3	CY*	25101	Place Riprap dissipator.
M.P. 0.58	40	CY*	32207B	Place 4" compacted depth Grading B Aggregate for 75' AH/BK
M.P. 0.72	60	CY*	32207B	Place 4" compacted depth Grading B Aggregate for 115' AH/BK
M.P. 1.01	40	CY*	32207B	Place 4" compacted depth Grading B Aggregate for 75' AH/BK
M.P. 1.47	1391	CY*	32207B	Begin placement of 4" compacted depth Grading B Aggregate.
M.P. 1.55	1	LS	20105	Disposal Site left. Clear entire spur road and begin placement from farthest end working back towards 2570 road filling in roadbed.
M.P. 1.64	1	Each	20301	Remove existing pipe.
	30	Foot	60278	Install new pipe.
	10	CY*	32207B	Place 12" compacted depth Grading B Aggregate over culvert.
	5	CY*	25101	Place Riprap dissipator.
M.P. 1.86	1	Each	20301	Remove existing pipe.
	40	Foot	60278	Install new pipe.
	10	CY*	32207B	Place 12" compacted depth Grading B Aggregate over culvert.
	3	CY*	25101	Place Riprap dissipator.
M.P. 2.41	2	Each	63307	Install delineators right.
M.P. 2.48	1	Each	20253	Remove tree at inlet.
	1	Each	20301	Remove existing pipe.
	40	Foot	60278	Install new pipe.
	10	CY*	32207B	Place 12" compacted depth Grading B Aggregate over culvert.
	20	Foot	60654	Outlet pipe.
M.P. 2.50				End placement of 4" compacted depth Grading B Aggregate.
				End Roadway Reconditioning.
				End of Project/RP: Junction F.S. 2570778 left.