U.S. DEPARTMENT of AGRICULTURE
FOREST SERVICE
UMPQUA NATIONAL FOREST
DIAMOND LAKE RANGER DISTRICT

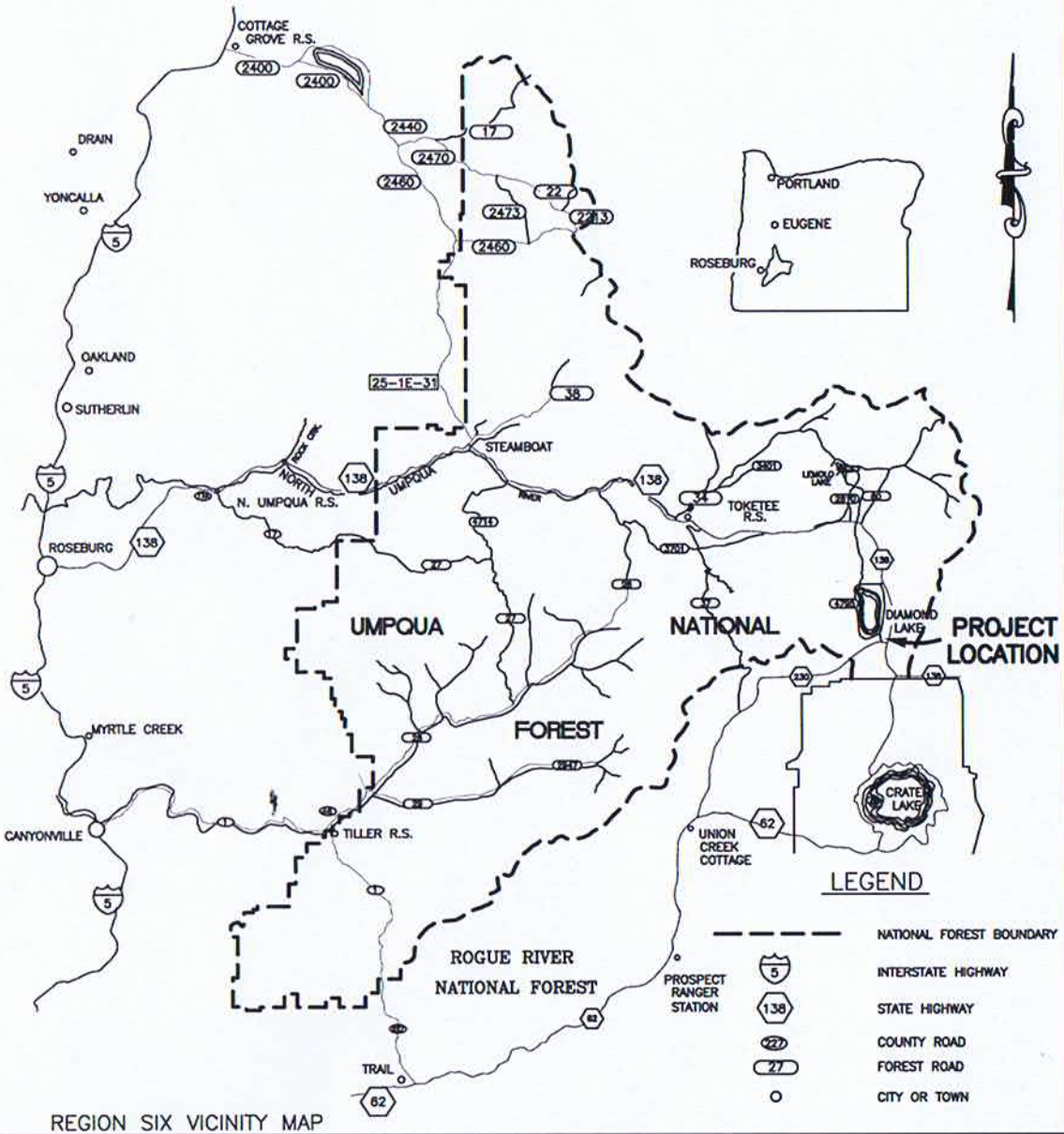

REGION SIX VICINITY MAP

INDEX

SHEET #	SHEET TITLE
1	TITLE SHEET
2	VICINITY MAP
3	ESTIMATE OF QUANTITIES
4	DRAINAGE LISTING
5	DRAIN DIP DETAILS
6	WORKLIST

PROPOSED PROJECT

ROAD NUMBER	LENGTH	TYPE OF WORK
6530-760	0.06 MILES	RECONSTRUCTION

RECOMMENDED BY: [signature] DATE: 5/8/13 TRANSPORTATION ENGINEER Acting	DESIGNED BY: [signature] DATE: 5/6/13
APPROVED BY: [signature] DATE: 5/7/13 DISTRICT RANGER	PLAN IN HAND BY: DATE:
[signature] DATE: 5/8 FOREST ENGINEER	REVIEWED BY: [signature] DATE: 5/6/13 PROJECT TEAM LEADER/DISTRICT ENGINEER

SILENT TIMBER SALE

SHT 1 OF 6

UMPQUA NATIONAL FOREST
DIAMOND LAKE RANGER DISTRICT

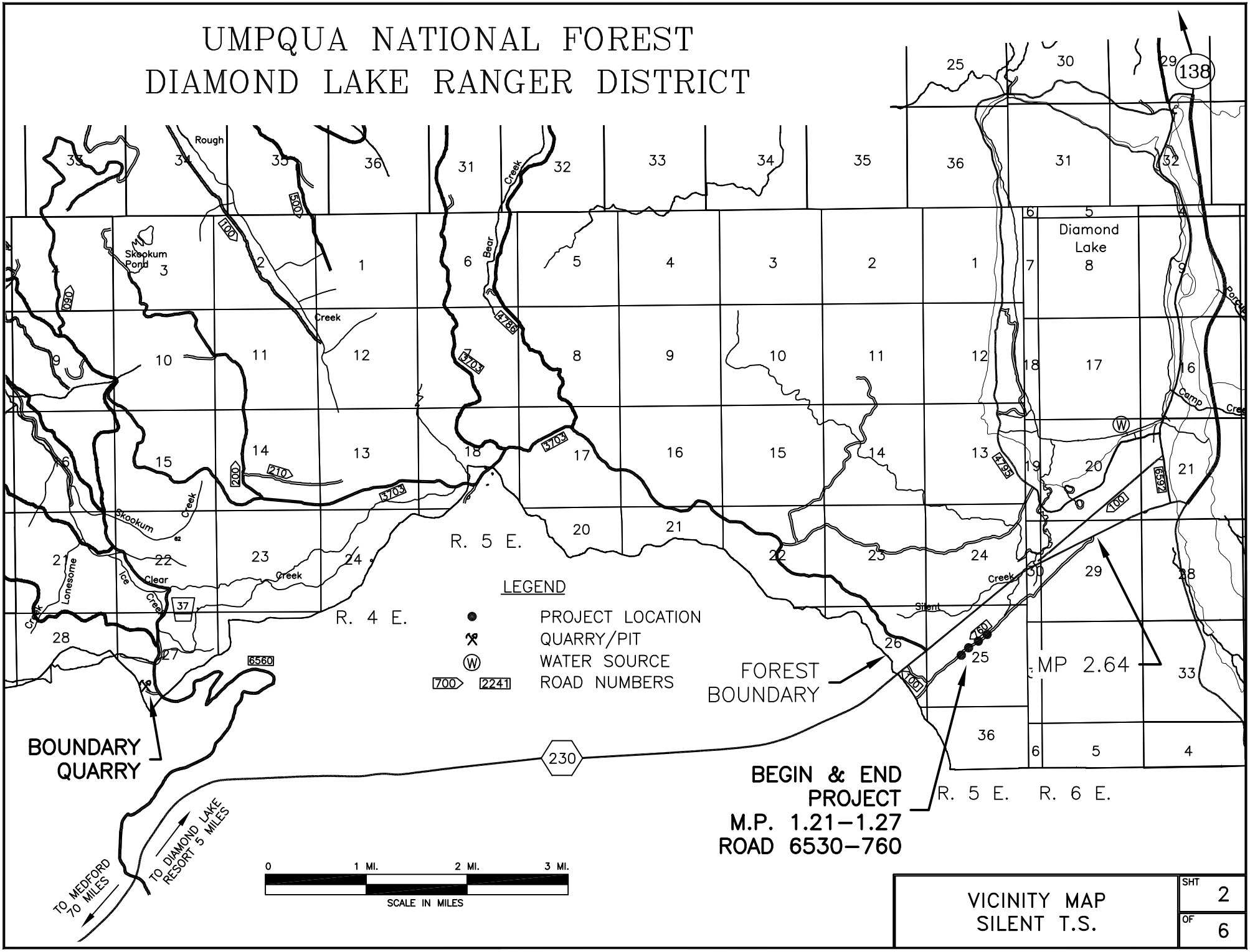

VICINITY MAP
SILENT T.S.

SHT 2 OF 6

SILENT TIMBER SALE ROADS - ESTIMATE OF QUANTITIES

NOTES:
1) All volume unit pay items are measured in-place. All reference to quantities of excavated volumes refer to original (prior to excavation) volume.
2) See worklists and vicinity map for further description and location of work.
3) Construction tolerance class "A" (Spec. 204.13).

Road No.	**6530-760**
Project Length (miles)	**0.06**
Work Type	**Reconstruction**

4)All units are measured as Actual Quantity unless denoted by an asterisk (*). If denoted by an asterisk (*) , the quantity is measured as a Contract Quantity in accordance with FP-03 subsection 109.02.

Pay Item	Description		Pay Item Quantities by Road	Total Quantities	Remarks
151-01	Mobilization	Lump Sum	All Required	1	
204-20	Drainage excavation, type drain dip	Each	2	2	Location staked by FS
251-01.2	Placed riprap, Class 2	CY*	15	15	Slope protection for drain dip. Boundary Quarry source. Sorting may be needed.
303-18	Roadbed reconditioning, compaction method B	Mile	0.06	0.06	Location staked by FS
322-22	Pit run maximum size 6-inches, compaction method B	CY*	118	118	Subgrade reinforcement for drain dip and repair of gully from Boundary Quarry source.
322-32	Haul and place stockpiled aggregate, compaction method B	CY*	58	58	Surfacing for Drain Dips. Source is stockpiled aggregate at Boundary Quarry

LOCATION AND CULVERT LENGTHS						INSTALLATION DETAILS AND SPECIAL SECTIONS									RIPRAP REQUIREMENTS												SHEET 4 OF 6
DESIGNED		AS BUILT				CORRUGATED METAL PIPE			SPILLWAYS			BEVELED DROP INLET			HEADWALL			SPLASH APRON			SLOPE PROTECTION			SUBGRADE REINFORCEMENT			SILENT TIMBER SALE DRAINAGE LISTING
MP	STA. (FT)	LENGTH (FT)	MP	STA. (FT)	LENGTH (FT)	DIA. (IN)	TH. (IN)	TYPE	DOWN-DRAIN LENGTH (FT)	ANCHORS (EA)	ELBOW	DIA (INCH)	LENGTH (FT)	"B" ANGLE	CY	CLASS	TYPE	CY	CLASS	TYPE	CY	CLASS	TYPE	CY	CLASS	TYPE	Remarks
								Rd. #6530-760																			
1.21 T0 1.27																								41	Pit Run	D	Gully Repair
1.21																					7.5	2	D	38.5	Pit Run	D	Drain Dip
1.25																					7.5	2	D	38.5	Pit Run	D	Drain Dip

NOTE:

1) Riprap shall be placed to the minimum dimensions shown on typical section drawings.
2) Riprap type abbreviations: D - Dumped, H - Hand Placed, M - Machine Placed.
3) Refer to sheet 5 for typical Drain Dip installation and construction details.

ITEM 204–20: DRAIN DIP

NOT TO SCALE. REFER TO WORKLISTS AND DRAINAGE LISTING.

ROAD 6530–760
M.P. 1.21 & 1.25

PLAN VIEW

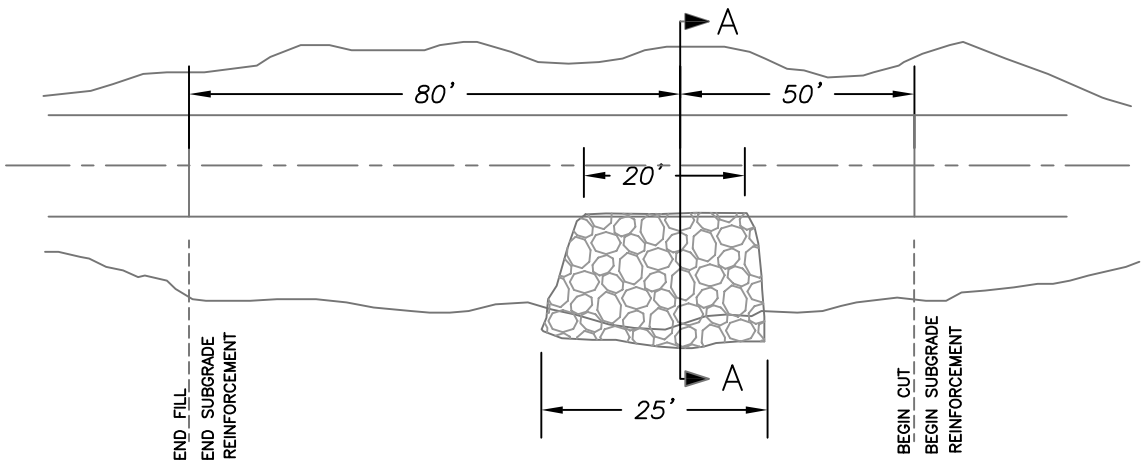

PROFILE

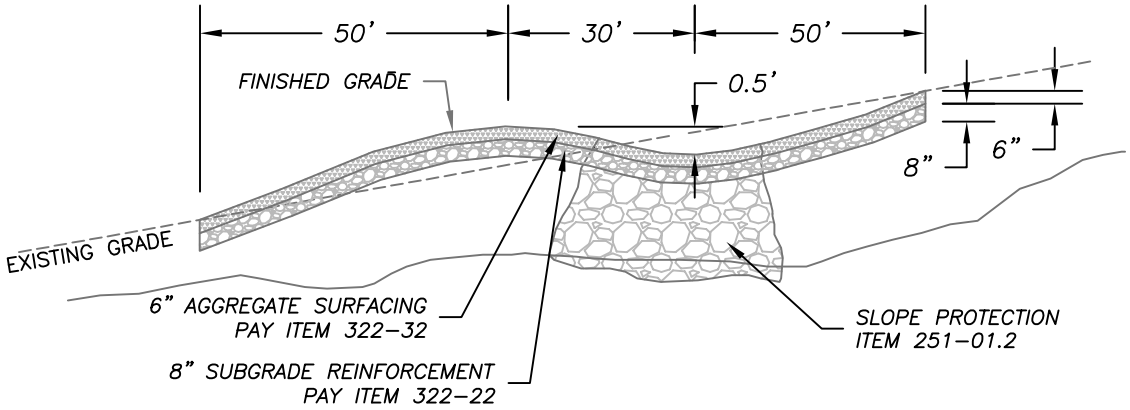

SECTION A–A

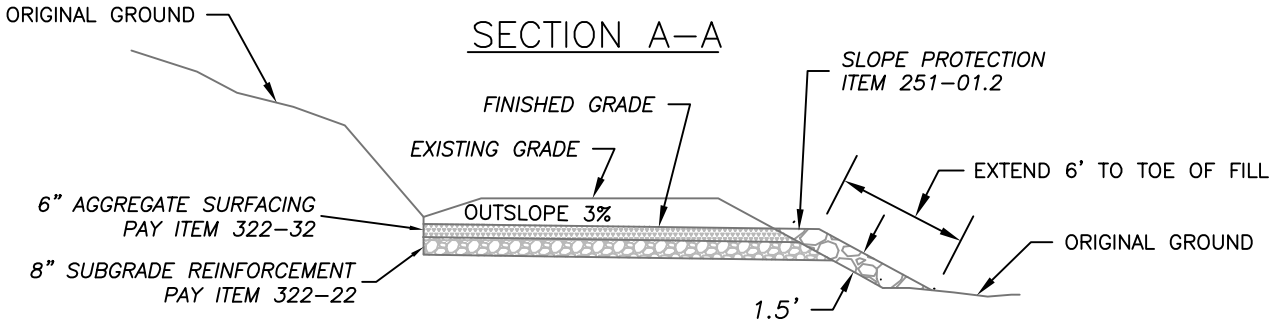

NOTES:

LOW POINT OF DRAIN DIP SHALL BE 0.5 FEET LOWER IN ELEVATION THAN THE DRAIN DIP CREST.

WHERE DITCHES ARE GREATER THAN 1 FOOT DEEP, BLEND LEAD–IN DITCH TO MATCH FINISHED ELEVATION OF DRAIN DIP LOW POINT.

EXCAVATE EXISTING FILL SLOPE AS NECESSARY TO PREPARE FOR PLACEMENT OF SLOPE PROTECTION, SO THAT THE FINISHED SLOPE SURFACE IS EITHER CONCAVE OR PLANAR AND BLENDS WITH ADJACENT FILL SLOPES. THIS EXCAVATION IS INDIRECT TO ITEM 204–20.

CLEARING AND GRUBBING OF EXISTING SURFACES MAY BE REQUIRED AND IS INDIRECT TO ITEM 204–20. CLEARED MATERIAL MAY BE PLACED ON ADJACENT FILL SLOPES.

SUBGRADE REINFORCEMENT, AGGREGATE SURFACING AND SLOPE PROTECTION QUANTITIES AND TYPES SHOWN ON WORKLISTS AND DRAINAGE LISTING.

UTILIZE EXCESS MATERIAL FROM EXCAVATION AS BACKFILL FOR REPAIR OF GULLY

DRAIN DIP DETAILS SILENT T.S.	SHT 5 OF 6

Reconstruction Worklist for Road 6530-760			SHEET 6 OF 6	
MILE POST	**DESCRIPTION**	**PAY ITEM**	**QUANTITY**	
0.000	Beginning of road 6530-760 at Forest boundary.			
1.21	**Begin reconstruction of road 6530-760.** Construct Drain Dip, see sheet 5 for typical. Begin filling existing gully with pit run material, from Boundary Pit, and compact. Begin reconditioning of roadbed, shaping the traveled way and shoulders to 2% outslope, compaction method B. Begin aggregarte surface placement and compaction.	240-20 251-01.2 303-18 322-22 322-32	1 7.5 .06 79.5 29	Each Cubic Yard Mile Cubic Yard Cubic Yard
1.25	Construct Drain Dip. See sheet 5 for typical.	204-20 251-01.2 322-22 322-32	1 7.5 38.5 29	Each Cubic Yard Cubic Yard Cubic Yard
1.27	End reconditioning of existing roadway. **End all reconstruction.**			
2.40	End road 6530-760 at Hwy 230.			