SAMPLE CONTRACT

U.S. DEPARTMENT OF AGRICULTURE FOREST SERVICE **INTEGRATED RESOURCE CONTRACT** (Applicable to Contracts with Measurement before Harvest)		**Name of Contractor**	
National Forest Ottawa	**Ranger District** Bessemer	**Region** Eastern	**Contract Number**
Contract Name Arrowhead Stewardship		**Award Date**	**Termination Date** 10/01/2015

The parties to this contract are The United States of America, acting through the Forest Service, United States Department of Agriculture, hereinafter called Forest Service, and _____ hereinafter called Contractor.

Unless provided otherwise herein, Forest Service agrees to sell and permit Contractor to cut and remove Included Timber and Contractor agrees to purchase, cut, and remove Included Timber and complete required stewardship projects.

IN WITNESS WHEREOF, the parties hereto have executed this contract as of the award date.

UNITED STATES OF AMERICA

By: _____
Contracting Officer

_____
(Title)

By: _____
(Contractor) 3/

_____

_____
(Title)

_____
(Business Address)

Two Witnesses:2/

_____
(Name)

_____
(Address)

_____
(Name)

_____
(Address)

I,4/_____, certify that I am the _____ Secretary of the corporation named as Contractor herein; that _____ who signed this contract on behalf of Contractor, was then _____ of the corporation; that the contract was duly signed for and in behalf of the corporation by authority of its governing body, and is within the scope of its corporate powers.

_____

CORPORATE SEAL 5/

SAMPLE CONTRACT

INSTRUCTIONS:

1/ If Contractor is a corporation, state a "corporation organized and existing under the laws of the State of _____" and specify the State; if Contractor is a partnership, state a "partnership consisting of _____" and specify the names of each partner; and if Contractor is a sole proprietor doing business under an assumed name, state "(n) individual doing business under the name of _____ City of _____, State of _____."

2/ The signatures and addresses of two witnesses are required if Contractor is other than a corporation.

3/ If Contractor is a co-partnership, the signatures should be: XYZ Company, by John Doe, a member of the firm. If Contractor is a corporation, form of signature should be: XYZ Company, by John Doe, President (or other officer or agent) and the seal of the corporation must be impressed or indicated.

4/ The certificate must be completed if Contractor is a corporation.

5/ For companies incorporated in States that require a corporate seal, if the corporation has no corporate seal that fact shall be stated, in which case a scroll or adhesive seal shall follow the corporate name.

EXAMPLE 1/

Subcontractor Certification
Regarding Debarment, Suspension, Ineligibility, and Voluntary Exclusion

Contract Name: _____
National Forest: _____

The prospective subcontractor (participants in lower tier covered transactions) certifies, by submission of this proposal, that neither it nor its principals is presently debarred, suspended, proposed for debarment, declared ineligible, or voluntarily excluded from participation in this contract by any Federal department or agency.

Where the prospective subcontractor is unable to certify to any of the statements in this certification, such prospective subcontractor shall attach an explanation to this proposal.

Name of Subcontractor: _____
Business Address: _____
_____

_____ Date _____ Signature

1/ It is Contractor's responsibility to have subcontractors complete this certification and to maintain a file of completed certifications. This certification does not need to be returned to the Forest Service, except at the written request of the Contracting Officer.

SAMPLE
CONTRACT

SAMPLE CONTRACT

Contract Name: Arrowhead Stewardship **Contract No:**

AT.0 - SPECIFIC CONDITIONS. The following conditions apply to the indicated portions of Division BT - Standard Provisions issued September 2004.

AT.1 - Location and Area, applicable to BT.1

This Contract Area of 513 acres more or less is located in:

T45N R41W Sections 4 & 5, T46N R41W Sections 29, 32 & 33 Gogebic County MI

AT.2 - Volume Estimate and Utilization Standards, applicable to CT.1, CT.2, CT.4, and GT.4

Species	Product	Estimated Quantity *	Unit of Measure	Minimum Specifications				
				Merchantable Tree		Piece Required to be Removed		
				Diameter Breast High (d.b.h.) (inches)	Number of Minimum Pieces per Tree	Length (feet)	Diameter Inside Bark at Small End (inches)	Net Scale in % of Gross Scale
Mixed Hardwood	Sawtimber	33.00	CCF	11.0	1	8	9.6	50
Sugar Maple	Sawtimber	24.00	CCF	11.0	1	8	9.6	50
Aspen	Pulpwood	225.00	CCF	5.0	1	8	4.0	70
Mixed Conifer	Pulpwood	44.00	CCF	5.0	1	8	4.0	70
Mixed Hardwood	Pulpwood	2,349.00	CCF	5.0	1	8	4.0	70
Total Quantity		2,675.00	CCF					

* Quantities not included here are described in CT.4.

AT.3- Timber Designations, applicable to CT.3; acres are approximate:

	Number	Acres
Clearcutting Units (CT.3.1)		
Specified Road Clearing (CT.3.2)		
Overstory Removal Units (CT.3.3)		
Understory Removal Units (CT.3.4)		
Individual Trees (CT.3.5)		226
Incompletely Measured Payment Units (CT.3.6)		

SAMPLE CONTRACT

AT.4 - Timber Payment Rates, applicable to DT.1 and ET.0

AT.4.1 - Escalated Rates, applicable for Species and Products to be Paid for at Rates Escalated under DT.2

Species	Product	Unit of Measure	Rates per Unit of Measure					Base Index
			Base $	Advertised $	Bid Premium $	Bid (Tentative) $	Required Deposits Slash Disposal $	
Not Applicable								

AT.4.2- Flat Rates, applicable for Species and Products to be Paid for at Flat Rates

Species	Product	Unit of Measure	Rates per Unit of Measure				
			Base $	Advertised $	Bid Premium $	Bid (Flat) $	Required Deposits Slash Disposal $
Mixed Hardwood	Sawtimber	CCF	2.93	61.68			.00
Sugar Maple	Sawtimber	CCF	5.69	148.75			.00
Aspen	Pulpwood	CCF	1.35	11.94			.00
Mixed Conifer	Pulpwood	CCF	1.25	8.60			.00
Mixed Hardwood	Pulpwood	CCF	1.44	14.73			.00

For purposes of convenience in collection and bookkeeping, Bid Rates stated in AT.4 include payment of deposits for contract area betterment required pursuant to 16 USC 576b. Such deposits are not included as Required Deposits defined hereunder.

SAMPLE CONTRACT

Contract Name: Arrowhead Stewardship **Contract No:**

AT.4.3 - Schedule of Payment Units

Payment Unit No.	Approx. Acres	To be Escalated under AT.4.1				Total Tentative Payment $	To be Paid for at Flat Rates under AT.4.2				Total Flat Rate Payment $	Total Required Deposits for Slash Disposal $
		Species	Product	Qty	UOM		Species	Product	Qty	UOM		
001	52						Mixed Hardwood	Sawtimber	6.00	CCF		.00
							Sugar Maple	Sawtimber	1.00	CCF		
							Aspen	Pulpwood	8.00	CCF		
							Mixed Conifer	Pulpwood	0.00	CCF		
							Mixed Hardwood	Pulpwood	524.00	CCF		
							Total PU Quantity And Value		539.00	CCF		
002	16						Mixed Hardwood	Sawtimber	3.00	CCF		.00
							Sugar Maple	Sawtimber	3.00	CCF		
							Aspen	Pulpwood	0.00	CCF		
							Mixed Conifer	Pulpwood	0.00	CCF		
							Mixed Hardwood	Pulpwood	174.00	CCF		
							Total PU Quantity And Value		180.00	CCF		
003	14						Mixed Hardwood	Sawtimber	4.00	CCF		.00
							Sugar Maple	Sawtimber	0.00	CCF		
							Aspen	Pulpwood	0.00	CCF		
							Mixed Conifer	Pulpwood	0.00	CCF		
							Mixed Hardwood	Pulpwood	147.00	CCF		
							Total PU Quantity And Value		151.00	CCF		
004	9						Mixed Hardwood	Sawtimber	3.00	CCF		.00
							Sugar Maple	Sawtimber	1.00	CCF		
							Aspen	Pulpwood	184.00	CCF		
							Mixed Conifer	Pulpwood	42.00	CCF		
							Mixed Hardwood	Pulpwood	71.00	CCF		
							Total PU Quantity And Value		301.00	CCF		
005	36						Mixed Hardwood	Sawtimber	2.00	CCF		.00
							Sugar Maple	Sawtimber	4.00	CCF		
							Aspen	Pulpwood	1.00	CCF		
							Mixed Conifer	Pulpwood	0.00	CCF		
							Mixed Hardwood	Pulpwood	331.00	CCF		
							Total PU Quantity And Value		338.00	CCF		
006	30						Mixed Hardwood	Sawtimber	1.00	CCF		.00
							Sugar Maple	Sawtimber	0.00	CCF		
							Aspen	Pulpwood	1.00	CCF		
							Mixed Conifer	Pulpwood	0.00	CCF		
							Mixed Hardwood	Pulpwood	291.00	CCF		
							Total PU Quantity And Value		293.00	CCF		
007	50						Mixed Hardwood	Sawtimber	4.00	CCF		.00
							Sugar Maple	Sawtimber	5.00	CCF		
							Aspen	Pulpwood	24.00	CCF		
							Mixed Conifer	Pulpwood	0.00	CCF		
							Mixed Hardwood	Pulpwood	539.00	CCF		
							Total PU Quantity And Value		572.00	CCF		
008	12						Mixed Hardwood	Sawtimber	1.00	CCF		.00
							Sugar Maple	Sawtimber	1.00	CCF		
							Aspen	Pulpwood	4.00	CCF		
							Mixed Conifer	Pulpwood	0.00	CCF		
							Mixed Hardwood	Pulpwood	123.00	CCF		
							Total PU Quantity And Value		129.00	CCF		

SAMPLE CONTRACT

Contract Name: Arrowhead Stewardship **Contract No:**

Payment Unit No.	Approx. Acres	To be Escalated under AT.4.1	Total Tentative Payment $	To be Paid for at Flat Rates under AT.4.2				Total Flat Rate Payment $	Total Required Deposits for Slash Disposal $
009	6			Mixed Hardwood	Sawtimber	0.00	CCF		.00
				Sugar Maple	Sawtimber	0.00	CCF		
				Aspen	Pulpwood	0.00	CCF		
				Mixed Conifer	Pulpwood	0.00	CCF		
				Mixed Hardwood	Pulpwood	49.00	CCF		
				Total PU Quantity And Value		49.00	CCF		
010	1			Mixed Hardwood	Sawtimber	9.00	CCF		.00
				Sugar Maple	Sawtimber	9.00	CCF		
				Aspen	Pulpwood	3.00	CCF		
				Mixed Conifer	Pulpwood	2.00	CCF		
				Mixed Hardwood	Pulpwood	100.00	CCF		
				Total PU Quantity And Value		123.00	CCF		

SAMPLE CONTRACT

AT.4.4 - Stewardship Credits, applicable to ET.2.2 and KT-GT.9#

Mandatory Stewardship Projects					
Project Number	**Project Description**	**Units of Measure**	**Quantity**	**Bid Rate $**	**Total Credits**
1-001	Tree Felling/Girdling	Each	471.00		
2-015	Opening Maintenance (Hand Tools Only)	Acres	1.00		

Optional Stewardship Projects						
Priority	**Project Number**	**Project Description**	**Units of Measure**	**Quantity**	**Bid Rate $**	**Total Credits**
2	3-004	Aspen Site Preparation	Acres	9.00		

The following definitions are established for the terms used in AT.4:

Base Rates are the lowest rates of payment for timber that are authorized by this contract. Base Rates remain constant throughout the life of this contract and are not subject to change by rate redetermination, except for reduction under DT.3.1, DT.3.2, or DT.3.3.

Advertised Rates are the minimum acceptable Bid Rates for timber, exclusive of Required Deposits. These rates are those indicated by appraisal, with a cost allowance made for construction of Specified Roads listed in AT.7, but are never less than Base Rates.

Bid Premium Rates are the amounts by which Contractor's bid is in excess of Advertised Rates. The Bid Premium Rates are constant during this contract, except as provided in DT.3.1, DT.3.2, and DT.3.3.

Bid Rates are the rates bid by Contractor (exclusive of Required Deposits for slash disposal and road maintenance) and are the sum of Advertised Rates and Bid Premium Rates. Until a rate redetermination becomes effective, the Bid Rate for species and products in AT.4.1 is the Tentative Rate that is subject to quarterly adjustment under DT.2; for species and products in AT.4.2, the Bid Rate is the Flat Rate.

Required Deposits are deposits that Contractor may be required to pay for slash disposal (16 USC 490) and road maintenance (16 USC 537). Required Deposits may be adjusted as part of a rate redetermination or a Contract Term Extension. The table shows only Required Deposits for slash disposal; road maintenance deposits, if any, are given in KT-FT.3.2#.

Base Index is the specified average of the lumber or other product selling value index used as the basis for computing adjustment in rates for variance in product selling value, as provided in DT.2.

AT.5 - Indices Used in Quarterly Adjustment, applicable to DT.2

Species	Index Name and Date
Not Applicable	

AT.6 - High Stumps, applicable to GT.4.1.2

Species	Product	Maximum Stump Height (inches)
All	Sawtimber	14
All	Pulpwood	10

AT.7 - Specified Roads, applicable to FT.2

Name and Date of Governing Road Specifications:

Project		Design Class	Approx. Length (mi./km.)	Sheet Numbers and Approval Date	Performance Responsibility		
Road No.	Name				Survey	Design	Construction Staking 1/
	Not Applicable						

1/ Indicate timing, i.e., before clearing (BC) or after clearing (AC). Applicable to FT.2.1.2

AT.8 - Forest Service Engineering Completion Schedule, applicable to FT.2.1

Road No.	Road Name	Type of Work	Completion Date
	Not Applicable		

AT.9 - Fire Precautionary Period, applicable to HT.2

April 01 to November 15, inclusive

AT.10 - Contractor Responsibility to Furnish Crews and Equipment for:

Initial Fire Supression, applicable to HT.3

Within 5.0 road miles

Fire Suppression Reinforcement, applicable to HT.3.1.2 and HT.3.1.3

Within 20.0 road miles

AT.11 - Contractor's Obligation per Operations Fire, applicable to HT.4.1

Maximum Amount: $ $1,000

AT.12 - Termination Date, applicable to IT.2

October 01, 2015

AT.13 - Normal Operating Season, applicable to GT.3.1, GT.6.6, IT.2.1, and JT.3

First Period: December 15 to March 15, inclusive

Second Period: _____ to _____, inclusive

AT.14 - Performance Bond, applicable to JT.1

Performance Bond Amount: N/A

AT.15 - Downpayment, applicable to E.T.2.1.1

Downpayment Amount: Not Applicable

AT.16 - Periodic Payment Amount, applicable to ET.2.1.3

	Periodic Payment Determination Date	Amount
Initial Payment:	N/A	N/A
Additional Payment:	N/A	N/A

AT.17 - Market-Related Contract Term Addition Producer Price Index, applicable to IT.2.1.2

Index Name: Wood Chips **Index Number:** 211135

AT.18 - Inapplicable Provisions

The following listed provisions are hereby made inapplicable. (Instructions: List by reference number and title.)

ET.4	PAYMENTS NOT RECEIVED
IT.2.1.2	MARKET-RELATED CONTRACT TERM ADDITION

AT.19 - List of Special Provisions in Part KT

The following listed special provisions are attached to and made a part of this contract. Provisions with reference numbers followed by # contain blanks into which data have been entered for this contract. (Instructions: List by reference number, title, and date.)

KT-CT.3.5.2#	DESIGNATION BY SPECIES AND DIAMETER (09/2004)
KT-CT.3.5.5#	INDIVIDUAL TREES, CUT TREE MARKING (06/2009)
KT-ET.4	PAYMENTS NOT RECEIVED (08/2012)
KT-FT.1.2#	USE OF ROADS BY CONTRACTOR (09/2004)
KT-FT.2.2.1#	MATERIAL SOURCES (09/2004)
KT-FT.3.1#	ROAD MAINTENANCE REQUIREMENTS (09/2004)
KT-GT.2.4#	SITE SPECIFIC SPECIAL PROTECTION MEASURES (09/2004)
KT-GT.3.1.3#	CUTTING SCHEDULE (06/2009)
KT-GT.3.1.4#	OPERATING RESTRICTIONS (06/2009)
KT-GT.4.1.2	STUMP MARKS (06/2009)
KT-GT.4.2#	SKIDDING AND YARDING REQUIREMENTS (06/2009)
KT-GT.6.2#	SITE SPECIFIC WETLANDS PROTECTION MEASURES (09/2004)
KT-GT.6.3#	TEMPORARY ROAD CLOSURE (06/2009)
KT-GT.7#	SLASH DISPOSAL MEASURES (06/2009)
KT-GT.9#	STEWARDSHIP PROJECTS (09/2004)
KT-HT.2	FIRE PRECAUTIONS (06/2009)
KT-IT.2.1.2	MARKET-RELATED CONTRACT TERM ADDITION (11/2008)

SAMPLE CONTRACT

KT-CT.3.5.2# - DESIGNATION BY SPECIES AND DIAMETER *(09/2004)*

Trees that meet Utilization Standards are designated for cutting, as shown on the Tree Designation Table and Sale Area Map, except trees Marked with **ORANGE (see Tree Designation Table)** paint or described to be left uncut.

See Tree Designation Table.

Additional trees to be cut, if any, are Marked with **NA** paint.

All **NA** shall be left as leave trees, unless Marked with **NA** paint. Leave **NA** trees of the designated cut species, **NA** inches stump diameter or greater, to avoid leave tree spacing greater than **NA** feet. Cutting unit boundaries and other trees that shall be left uncut are Marked with **ORANGE (see Tree Designation Table)** paint.

Distances are measured horizontal distance, outside bark stump height to outside bark stump height. Stump diameter is measured outside bark at stump height in a horizontal and is the average of a measurement across the short axis through the true center of the stump and a second measurement at right angles to the short axis.

Contractor and Forest Service shall agree to skid trail location under BT6.422. Skid trails shall be no greater than **NA** feet wide with a **NA** foot spacing. Quantities of trees located in skid trails **are not (unless a designated species in attached table)** Included Timber under AT2.

SAMPLE CONTRACT

FS-2400-13T (9/04)

WO-KT-CT.3.5.2# – DESIGNATION BY SPECIES AND DIAMETER. (09/04)

Tree Designation Table

Payment Unit(s) or Cutting Unit(s)	Designated Species 1/	More Than Stump Diameter (inches) 2/	Less Than Stump Diameter (inches) 2/
4	All LIVE trees that meet minimum merchantability specifications in AT.2 EXCEPT pine, hemlock, White Cedar, Oak ,Elm, Yellow Birch and Black Cherry or LEAVE TREES **	>=6.0"	

Payment Unit boundaries: Exterior boundaries are marked with 3 ORANGE paint slashes above stump height; interior boundaries are marked with 2 ORANGE paint slashes above stump height on each side of the boundary. Boundary trees are also marked below stump height. Paint marks face to the INSIDE of the Payment Unit. BOUNDARY TREES ARE NOT TO BE CUT.

** LEAVE TREES are banded with Single Orange-painted BAND at eye level, with stump mark.

SAMPLE CONTRACT

KT-CT.3.5.5# - INDIVIDUAL TREES, CUT TREE MARKING *(06/2009)*

Individual trees to be cut are Marked with indicated color above and below stump height in all or parts of the following Payment Units. Areas of Cut Tree Marking are shown on the Contract Area Map with the symbol "CTM."

PAYMENT UNIT(S)	PAINT COLOR

SAMPLE CONTRACT

R9-KT-CT.3.5.5# - INDIVIDUAL TREES. (11/2007)

Cut Tree Marking Table

Payment Units	Paint Color
1, 2, 3, 5, 6, 7, 8, 9	Blue
10 (ROW)	Yellow

Payment Unit boundaries: Exterior boundaries are marked with 3 ORANGE paint slashes above stump height; interior boundaries are marked with 2 ORANGE paint slashes above stump height on both sides of the tree. Boundary trees are also marked below stump height. Paint marks face to the inside of the Payment Unit. These boundary trees are NOT to be cut, unless designated by the Forest Service.

SAMPLE CONTRACT

KT-ET.4 - PAYMENTS NOT RECEIVED *(08/2012)*

(a) Payments are due and payable on the date of issue indicated on the bill for collection. When a payment for timber cut and other charges is not received at the location designated by Forest Service by the date specified in the bill for collection, Contracting Officer will suspend all or any part of Contractor¿s Operations until payment or acceptable payment guarantee is received. Other charges include, but are not limited to:

(i) Slash disposal and road maintenance deposits;

(ii) Cooperative work at rates established by specific agreement under ET.2.1.8;

(iii) Damages pursuant to JT.4;

(iv) Road use fees;

(v) Restoration of downpayment pursuant to ET.2.2;

(vi) Periodic payments pursuant to ET.2.1.3;

(vii)Extension Deposits pursuant to ET.2.1.7; and

(viii)Other mandatory deposits.

(b) Failure to pay amounts due by the date specified in the bill for collection shall be considered a breach under JT.3. The 30-day notice period prescribed therein shall begin to run as of the end of business on the date specified for receipt of payments. If the performance or payment is guaranteed by surety bond, the surety will receive a copy of the written notification of breach. Demand will be made on the surety or other institution providing the guarantee or bond instrument for immediate payment 10 days after issuance of written notification of the breach.

(c) Pursuant to the Debt Collection Improvement Act of 1996, as amended, if payment is not received by Forest Service within 15 days after the date of issue indicated on the bill for collection:

(i) Simple interest shall be assessed at the Current Value of Funds Rate as established by the Secretary of the Treasury. Interest will begin to accrue as of the date of issue indicated on the initial bill for collection.

(ii) Debtors will be assessed administrative charges, in addition to the delinquent amount due. Administrative charges are those additional costs incurred by the Government in processing, handling, and collecting delinquent debts.

(iii) A penalty charge of six (6) percent per annum will be assessed on any portion of a debt delinquent more than 90 days. This penalty charge is in addition to interest and administrative charges under paragraphs (c)(i) and (c)(ii). The penalty charge shall accrue from the date of issue indicated on the bill for collection and shall be assessed on all outstanding amounts, including interest and administrative costs assessed under paragraphs (c)(i) and (c)(ii).

(iv) Payments will be credited on the date received by the Federal Depository or Collection Officer designated on the bill for collection.

(d) Forest Service remedies for Contractor¿s failure to make payment for timber cut and other charges when due, except for accrual of interest, suspension of all or any part of Contractor¿s Operations, and administrative offset, shall be stayed for so long as:

(i) A bona fide dispute exists as to Contractor¿s obligation to make such payment and

(ii) Contractor files and prosecutes a timely Claim.

SAMPLE CONTRACT

KT-FT.1.2# - USE OF ROADS BY CONTRACTOR *(09/2004)*

Contractor's use of existing roads identified on Contract Area Map by the following codes is prohibited or subject to restrictive limitations, unless agreed otherwise:

Code	Use Limitations
X	Hauling prohibited
R	Hauling restricted
U	Unsuitable for hauling prior to completion of agreed reconstruction
P	Use prohibited
A	Public use restriction
W	Regulation waiver

Roads coded A will be signed by the Forest Service to inform the public of use restrictions. Contractor's use of roads coded R, A, or W shall be in accordance with the following restrictions:

See Restricted Road List Table.

SAMPLE CONTRACT

FS-2400-13T (94/04)

WO-KT-FT.1.2# – USE OF ROADS BY CONTRACTOR. (09/04)

Restricted Road List

Road Number	Road Name	Termini		Map Legend	Description of Restrictions
		From	To		
6903-B	FR 6903-B	MP 0.11	End	X	Hauling Prohibited
6903-C	FR 6905-C	MP 0.58	End	X	Hauling Prohibited
5132	5132 (Road to County Line Lake Pit)	Gate		R	Gate shall be closed and locked when operations are not in progress
All Unidentified Roads Marked with "X"				X	Hauling Prohibited, Use for skidding must be approved prior to use.
All Unidentified Roads Marked with "P"				P	All Use Prohibited

KT-FT.2.2.1# - MATERIAL SOURCES *(09/2004)*

Sources of local materials are designated on Plans and Contract Area Map. Forest Service assumes responsibility for the quality and quantity of material in designated sources. Contractor shall determine the equipment and work required to produce the specified product, including the selection of acceptable material that is reasonably available in the source that meets specifications. The designation of source includes the rights of Contractor to use certain area(s) for plant site, stockpiles, and haul roads.

Should the designated source, due to causes beyond the control of Contractor, contain insufficient acceptable material, Forest Service will provide another source with adjustment in accordance with FT.2.5.3.

When Contractor elects not to use designated sources, Contractor shall furnish the specified product with no adjustment in unit rates. Quality testing shall be the responsibility of Contractor. Test results shall be furnished to Forest Service.

When Contractor elects not to use designated sources and Schedule of Items lists pit development separately, cost allowance will be reduced under FT.2.5.3 when Forest Service determines the work will not be required.

When materials are subject to a weight measurement, the specific gravity or weight/volume relationship used as a basis for determination of estimated quantities shall be:

Source I NA , Source II NA , and Source III NA .

Contractor may, when agreed in writing, use on the project such suitable stone, gravel, and sand, or other material found in the excavation, and will earn a cost allowance for the excavation of such materials at the corresponding contract unit price and for the pay items for which the excavated material is used. Contractor shall replace, without additional cost allowance, sufficient suitable materials to complete the portion of the work, which was originally contemplated to be constructed with such material. Contractor shall not excavate or remove any material, except that which is within the excavation limits, without written authorization from Forest Service.

When material is appraised from non-National Forest designated sources, owner charges for the material in terms of unit cost for royalties, purchase of raw materials, or finished products shall be as follows until NA :

See Material Source Table.

Should quantity vary from that estimated, payment to owners shall be for units actually obtained. Contractor shall make arrangements with owner(s) for measurement and payment for royalties, purchase of raw materials, or finished products, as shown above.

Materials produced or processed from National Forest lands in excess of the quantities required for performance of this contract are the property of Forest Service, unless prior written agreement has been obtained to use excess material on other National Forest contracts. Forest Service is not obligated to reimburse Contractor for the cost of their production.

Materials shall be stored to assure the preservation of their quality and fitness for the work. Stored materials shall be located to facilitate their prompt inspection. Sites on Forest Service administered land, approved by Forest Service, may be used for storage purposes and for the placing of Contractor¿s plant equipment. All storage sites provided by Forest Service shall be restored at Contractor¿s expense.

SAMPLE CONTRACT

Contractor shall be responsible for making arrangements for storage on other than Forest Service administered lands.

When the construction of the portion of the project for which Temporary Roads used for hauling materials is completed, all such Temporary Roads shall be restored as nearly as practicable to their original ground profile, unless otherwise agreed in writing.

SAMPLE CONTRACT

FS-2400-13T (09/04)

WO-KT-FT.2.2.1# – MATERIAL SOURCES. (09/04)

Material	Type of Purchase	Owner(s)	Unit of Measure	Unit Price	Estimated Quantity	Total
N/A						

SAMPLE CONTRACT

KT-FT.3.1# - ROAD MAINTENANCE REQUIREMENTS *(09/2004)*

Contractor shall maintain roads in accordance with the following Contract Road Maintenance Requirements Summary:

See Contract Road Maintenance Requirements Summary Table.

SAMPLE CONTRACT

Contract Name: Arrowhead Stewardship

FS-2400-13T (9/04)

WO-KT-FT.3.1# – ROAD MAINTENANCE REQUIREMENTS. (09/04)

Contract Road Maintenance Requirements Summary

Road	Termini		Miles	Applicable Prehaul Road Maintenance Specifications									
	From	To		T-8030	T-8130		T-8340	T-8350	T-8360	T-8620			
6903	MP 0.00	MP 0.38	0.38		P		P		P	P			
6903-B	MP 0.00	MP 0.11	0.11						P				
6903-C	MP 0.00	MP 0.58	0.58		P				P				

P = Contractor Performance Item, D = Deposit to Forest Service, D3 = Deposit to Third Party

Road	Termini		Miles	Applicable During Haul Road Maintenance Specifications									
	From	To		T-8030	T-8130		T-8340	T-8350	T-8360	T-8620			
6903	MP 0.00	MP 0.38	0.38	P			P		P				
6903-B	MP 0.00	MP 0.11	0.11	P					P				
6903-C	MP 0.00	MP 0.58	0.58	P					P				

P = Contractor Performance Item, D = Deposit to Forest Service, D3 = Deposit to Third Party

Road	Termini		Miles	Applicable Post Haul Road Maintenance Specifications									
	From	To		T-8030	T-8130		T-8340	T-8350	T-8360	T-8620			
6903	MP 0.00	MP 0.38	0.38				P	P	P	P			
6903-B	MP 0.00	MP 0.11	0.11					P	P				
6903-C	MP 0.00	MP 0.58	0.58					P	P				

P = Contractor Performance Item, D = Deposit to Forest Service, D3 = Deposit to Third Party

SAMPLE CONTRACT

KT-GT.2.4# - SITE SPECIFIC SPECIAL PROTECTION MEASURES *(09/2004)*

Special protection measures needed to protect known areas identified on Sale Area Map or on the ground include:

Cultural Resource Protection Measures: **There is a known cultural site within the Contract Area Boundary. Contractor will be given a confidential Work Map showing this location. All equipment and logging slash is prohibited within these areas.**
Wildlife and Botanical Protection Measures: **There is a Sensitive species in Stewardship Project Area #2-015. Supplemental Specifications to KT-GT.9# describes specific protection measures.**
Cave Resource Protection Measures: **NA**

KT-GT.3.1.3# - CUTTING SCHEDULE *(06/2009)*

Unless changed by written agreement, only **2 (does not include Payment Unit 10 (ROW)** Payment Units may be released for operations at one time, and the sequence of cutting Payment Units shall be : **at Contractor's option** .

Unless there is agreement in writing to postpone specific requirements, all contractual requirements on a Payment Unit shall be accepted by Forest Service prior to the release of an additional Payment Unit.

KT-GT.3.1.4# - OPERATING RESTRICTIONS *(06/2009)*

Within Contract Area, unless changed by written agreement, the following operating requirements apply:

Restricted operations/activities:
Within Payment Units 2, 8 & 9 - Harvest Operations are restricted during the period of 3/16 through 7/14 (due to soils and protection of residual trees) and during the period of 10/1 through 12/14 (due to soils).

Within Payment Units 1, 3, 5, 6 & 7 - Harvest Operations are restricted during the period of 3/16 through 12/14 (due to soils).

Within Payment Unit 4 - Harvest operations are restricted during the period of 3/16 through 12/14 (due to soils and aspen regeneration requirements).

Pit restoration in the County Line Lake Pit will be accomplished no later than the end of each operating season.

Temporary Road entrances associated with Payment Units 7, 8, and 9 along Gogebic County Road 527 shall be completed in compliance with Gogebic County Road Commission Permit #1101. Construction permit expires 12/31/2014.
Prohibited operations/activities:
NA

SAMPLE CONTRACT

KT-GT.4.1.2 - STUMP MARKS *(06/2009)*

Trees designated for cutting under CT.3.5 have been marked with paint at breast height and below stump height. Trees shall be felled so as to leave paint on stump.

KT-GT.4.2# - SKIDDING AND YARDING REQUIREMENTS *(06/2009)*

As used in this provision, skidding equipment includes rubber-tire and track-mounted skidders, forwarders, bunchers, processors, and any other mechanized equipment that is used off of landings and roads.

Within Payment Unit(s), as shown on Contract Area Map with symbol "SYR": **SYR (1) - In Payment Unit 8, unless otherwise agreed to in writing, skidding of products longer than 16 feet will not be permitted. Included Timber shall be skidded/fowarded to landings/entrances under Permit with Gogebic County Road comission.**

SYR (2) - No decking shall take place outside of the Contract Area to the north of FR 6903. All wood shall be decked at locations south of FR 6903 and located perpendicular to the road prism. Landings will be designated by the Forest Service.

SYR (3) - Roadside decking is prohibited at the east end of FR 6903 where the temporary road enters the Broken Arrow Contract Area. All Included Timber in PU 10 shall be skidded/fowarded into the Arrowhead Stewardship Contract Area to a landing designated by the FS.
Within portions of Payment Unit(s), as shown on Contract Area Map with symbol "SYR" and cross-hatching:
NA

KT-GT.6.2# - SITE SPECIFIC WETLANDS PROTECTION MEASURES *(09/2004)*

Measures needed to protect wetlands identified on the Sale Area Map or on the ground include:

All logging slash, equipment, and vehicles are prohibited within these areas. Any slash resulting from the Purchaser's Operations shall be removed immediately or treated as directed by the Forest Service.

KT-GT.6.3# - TEMPORARY ROAD CLOSURE *(06/2009)*

In addition to GT.6.3, measures to effectively block temporary roads to normal vehicular traffic shall consist of the following:

For the Temporary Road accessing Payment Units 3, 4, 5, and 6, refer to Typical Drawing for Earthen Berms/Road Closure Devices. Location to be designated by Forest Service.

For the Temporary exits accessing Payment Units 7, 8, and 9, along CR 527, closure of these exits consists of restoring the ditchline and shoulders of CR 527; beyond the clearing limts of CR 527, Contractor shall restore the road to slope of surrounding terrain and cover with logging slash to obliterate the road.

SAMPLE CONTRACT

KT-GT.7# - SLASH DISPOSAL MEASURES *(06/2009)*

Slash resulting from Contractor's operations shall be removed from lakes, ponds, private land, right-of-way clearings for telephone lines, power lines, pipelines and other authorized facilities, and landings to be seeded under KT-GT.6#.

The tops of trees shall not be left hanging in standing trees. All trees cut for landing and other construction clearings shall be completely severed and not left leaning. Slash resulting from construction clearing shall be treated concurrent with harvest operations.

Other specific slash disposal requirements are as follows:

SDZ - Slash resulting from construction clearing (such as from landings, temporary roads, right-of-way clearing associated with pre-haul maintenance requirements listed in Special Provision KT-FT.3.1# other than Specified Road construction) shall be lopped and scattered to lie within 3 feet of the ground. All root wads will be severed from the stem and righted on the ground or otherwise disposed of as directed by the Forest Service, concurrent with operations.

SDZ(1) - Within a strip 25 feet in width measured from the forested edge along County Road 527 (Units 1, 7, 8 and 9) all slash resulting from the Purchaser's Operations shall be lopped and scattered to lie within 2 feet of the ground, concurrent with operations.

SDZ(2) - Within the Contract Area, except as specified elsewhere in this contract, all debris/slash resulting from the use of slashers/processors or other similar equipment shall be removed from landings and roadsides and scattered to lie within 3 feet of the ground or otherwise disposed of as directed by the Forest Service, concurrent with operations.

Slash Disposal treatment zones are shown on the Contract Area Map with symbol "SDZ."

KT-GT.9# - STEWARDSHIP PROJECTS *(09/2004)*

Performance of stewardship projects shall be in accordance with the following specifications.

Stewardship Projects

SAMPLE CONTRACT

KT-GT.9# - STEWARDSHIP PROJECTS. (09/2004)

Stewardship Projects

Mandatory Stewardship Projects		
Project Number	**Project Description**	**Specification Pages**
1-001	Fell/Girdle Trees	SP-2
2-015	Opening Maintenance (Hand Tools Only)	SP-3 thru SP-4

Optional Stewardship Projects		
Project Number	**Project Description**	**Specification Pages**
3-004	Aspen Site Preparation	SP-5 thru SP-6

SAMPLE CONTRACT

KT-HT.2 - FIRE PRECAUTIONS *(06/2009)*

Unless otherwise agreed in writing between the Contractor and the Contracting Officer, the following are specific precautionary measures applicable during Contractor's Operations in Fire Precautionary Period as indicated in AT.9:

1. Contractor shall maintain Forest Service-approved spark arresting devices on any piece of equipment operated by an internal combustion motor. In addition, each piece of motorized equipment shall be equipped with a serviceable round-pointed shovel and an operational fire extinguisher of at least five-pound rating suitable for the equipment being used. All chainsaw operators will have a serviceable round-pointed shovel and one-pound multipurpose fire extinguisher readily available.

2. Contractor shall require that smoking and the building of lunch or warming fires by Contractor's employees, contractors, or subcontractors be confined to designated safe places where flammable debris has been cleared away and where, at the option of the Contractor, smoking or the building of lunch or warming fires may be permitted.

3. Adequate spark arresters shall be maintained on chimneys or stovepipes where wood or coal is being burned in an enclosed device.

4. Contractor shall furnish serviceable firefighting tools. Location, numbers, and types of tools shall be specified in the Fire Prevention and Control Plan in accordance with HT.1.

KT-IT.2.1.2 - MARKET-RELATED CONTRACT TERM ADDITION *(11/2008)*

The term of this contract may be adjusted when a drastic reduction in wood product prices has occurred in accordance with 36 CFR 223.52. The Producer Price Index used to determine when a drastic reduction in price has occurred is stated in AT.17. Contractor will be notified whenever the Chief determines that a drastic reduction in wood product prices has occurred. If the drastic reduction criteria specified in 36 CFR 223.52 are met for 2 consecutive calendar quarters, after contract award date, Contracting Officer will add 1 year to the contract term, upon Contractor's written request. For each additional consecutive quarter such a drastic reduction occurs, Contracting Officer will, upon written request, add an additional 3 months to the term during Normal Operating Season, except that no single 3-month addition shall extend the term of the contract by more than one year. Contracting Officer must receive Contractor's written request for a market-related contract term addition before the expiration of this contract.

No more than 3 years shall be added to a contract's term by market-related contract term addition unless the following conditions are met:

(i) The contract was awarded after December 31, 2006; and

(ii) A drastic reduction in wood product prices occurred in at least ten of twelve consecutive quarters during the contract term, but not including the quarter in which the contract was awarded.

For each qualifying quarter meeting the criteria in paragraphs (i) and (ii) of this provision, the Forest Service will, upon the Contractor¿s written request, add an additional 3 months during the normal operating season to the contract, except no single 3-month addition shall extend the term of a contract by more than 1 year.

In no event shall a revised contract term exceed 10 years as a result of market-related contract term addition.

Additional contract time may not be granted for those portions of the contract that have a required completion date or for those portions of the contract where Contracting Officer determines that the timber is in need of urgent removal or that timber deterioration or resource damage may result from delay.

SAMPLE CONTRACT

This page left Blank intentionally

ARROWHEAD STEWARDSHIP ROAD MAINTENANCE REQUIREMENTS

FS-2400-13T Contracts (09/04)

WO-KT-FT.3.1# Special Provisions

SAMPLE CONTRAC

SECTION 1. GENERAL

Purchaser's main Road Maintenance responsibility begins: (1) after Purchaser performs Prehaul Maintenance on a road listed in the Road Maintenance Requirements Schedule; or (2) for all other roads, when Purchaser begins to use the road. Occasional travel by Purchaser's light vehicles, prior to beginning of construction clearing or logging operations in the area accessed by the road, does not constitute beginning of use. Purchaser is not required to perform routine maintenance during periods of inactivity. During periods of inactivity, Forest Service will perform maintenance only as required to meet its needs.

The Purchaser shall maintain roads, commensurate with the Purchaser's use, in accordance with the Road Maintenance Requirements Summary and Road Maintenance Specifications. Performance of road maintenance work by the Purchaser may be required prior to, during, or after each period of use. The timing of work accomplishment shall be based on the Purchaser's operating schedule under Standard Provision **GT.3.1**.

If the Purchaser elects to use different roads than those listed in the Road Maintenance Requirements Summary, the Contracting Officer (CO) or designee shall determine the Purchaser's commensurate share of road maintenance and/or revise road maintenance deposits.

Unless the CO or designee agrees in writing, all Prehaul Maintenance requirements shall be completed on any portion of road prior to hauling on that portion.

The Forest Service shall prepare a revised Road Maintenance Requirements Schedule to reflect changes in the original haul routes when needed.

Any work or materials that are determined to no longer be needed and are waived shall have the estimated cost charged to the Timber Sale Account as described in **IT.3.3**.

SAMPLE CONTRACT

SECTION 2. ROAD MAINTENANCE DEFINITIONS

Wherever the following terms are used in the Road Maintenance Specifications, the meaning shall be:

Base Course. Material placed on the Subgrade to distribute concentrated wheel loads.

Borrow. Select Material taken from designated borrow sites.

Crown, Inslope, and Outslope. The cross slope of the Traveled Way to aid in drainage and traffic maneuverability.

Culverts. A conduit or passageway under a road, trail, or other obstruction. A culvert differs from a bridge in that it is usually entirely below the elevation of the Traveled Way.

Drainage Dip. A dip in the Traveled Way which intercepts surface runoff and diverts the water off the Traveled Way. A Drainage Dip does not block the movement of traffic.

Drainage Structures. Manufactured structures which control the runoff of water from the Roadway including Inslope, overside drains, aprons, flumes, downdrains and downpipes.

During Haul Maintenance. Road maintenance work to be accomplished during the period of timber removal.

Geotextile. A group of construction fabrics with varying attributes designed for different purposes.

Lead-off Ditches. A ditch used to transmit water from a Culvert, Drainage Structure or Drainage Dip outlet to the natural drainage area.

Maintenance Activitiy. Items of work leading to the restoration and upkeep of a road and necessary to sustain the road's anticipated traffic.

Material. Any substance specified for use in the performance of the work.

Post Haul Maintenance. Road maintenance work to be accomplished after timber removal is completed.

Prehaul Maintenance. Road maintenance work to be accomplished prior to the roads use. Roads receiving prehaul maintenance shall be shown on the Sale Area Map.

Road Maintenance Cost. An estimate of the cost to perform road maintenance activities; as determined by the Forest Service. Estimates may include any or all of the work activities listed in Section 4, Road Maintenance Activity Specifications.

Roadbed. The portion of a road between the intersection of Subgrade and sideslopes, excluding that portion of the ditch below Subgrade.

Roadside. A general term denoting the area adjoining the outer edge of the Roadway.

Roadway. The portion of a road within the limits of excavation and embankment.

SAMPLE CONTRACT

Sand Hole. A hole that develops in the running surface of the road which is quite soft and dangerous in nature. Usually found in very sandy soils.

Shoulder. That portion of Roadway contiguous with Traveled Way for accommodation of stopped vehicles, for emergency use, and lateral support of Base and Surface Course, if any.

Slide. A concentrated deposit of materials from above or on backslope extending onto the Traveled Way or Shoulders, whether caused by mass land movements or accumulated ravelling.

Slough. Material eroded from the backslope which partially or completely blocks the ditch, but does not encroach on the Traveled Way so as to block passage of traffic.

Slump. A localized portion of the Roadbed which has slipped or otherwise become lower than that of the adjacent Roadbed and constitutes a hazard to traffic.

Subgrade. Top surface of Roadbed upon which Base Course or Surface Course is constructed. For roads without Base Course or Surface Course, that portion of Roadbed prepared as the finished wearing surface.

Surface Course. The Material placed on the Base Course or Subgrade to enhance traction, distribute concentrated wheel loads and resist abrasion and the effects of climate. Surface Course may be referred to as surfacing.

Traveled Way. That portion of Roadway, excluding Shoulders, used for the movement of vehicles.

Turnouts. That portion of the Traveled Way constructed as additional width on single lane roads to allow for safe passing of vehicles.

SECTION 3. ROAD MAINTENANCE REQUIREMENTS SCHEDULE

See **WO-KT-FT.3.1#** Summary Table

SECTION 4. ROAD MAINTENANCE SPECIFICATIONS

INCLUDED SPECIFICATIONS

Specification No.	Specification Title
T-8030	Snow Removal
T-8130	Spot Surface Course Replacement/Replenishment
T-8340	Drainage Structure Maintenance
T-8350	Roadway Drainage Maintenance
T-8360	Composite High Clearance Road Maintenance
T-8620	Miscellaneous Maintenance

SAMPLE CONTRACT

T-8030 Snow Removal

DESCRIPTION

1.1 This Section provides for removal of snow from roads to facilitate logging operations and safe use. Remove snow from all or part of the traveled way, including sufficient turnouts for safe and efficient use for timber transportation and to protect the road. Remove intruding windfalls, debris or slough and slide material and dispose of only as necessary to provide passage for timber transportation. Removed materials may be deposited off the traveled way or outside the traveled way at locations designated by the Forest Service Representative (FSR). Snow may also be compacted as needed to freeze down soft areas or wet areas. This work is considered part of this specification. Equipment used for this work shall be in accordance with this specification and approved in advance by the FSR.

EQUIPMENT

2.1 Purchaser may use any type of equipment to remove snow, providing:

a. Type or use of equipment is not restricted in **KT-FT.1.2#** or Schedule document.
b. Equipment is of the size and type commonly used to remove snow and will not cause damage to the road. Tracked or cleated vehicles shall not be used unless approved in writing by the FSR.
c. The Blade will be equipped with skid shoes to prevent loss of surfacing and damage to the road bed. On gravel and native surface roads, a minimum **4** -inch depth compacted snow mat will be maintained on the roadbed during blading.

REQUIREMENTS

3.1 Erect signs required by the Sign Plan in the SUPPLEMENTAL SPECIFICATIONS or as shown on the Section 3. Road Maintenance Requirements Schedule. Perform work in a manner to preserve and protect roads and appurtenances, and prevent erosion damage to roads, streams, and other forest values.

3.2 Space, construct, and maintain drainage holes in the dike of snow or berm caused by snow removal operations. Place drain holes to obtain surface drainage without discharging on erodible fills.

3.3 Upon seasonal completion of Purchaser's Operations, effectively block the road by a snow barricade, unless otherwise approved by the Contracting Officer.

3.4 Ice control may be performed by Purchaser when approved by the FSR in writing. Such approval will include ice control materials, application rates, and any specific requirements of use.

3.5 Snow berms will be reduced at road intersections where plowed road segments join unplowed road segments. Reduce the piled snow in the roadway to create a smooth transition from plowed road to normal snow depth.

SAMPLE CONTRACT

T-8130 Spot Surface Course Placement/Replenishment

DESCRIPTION

1.1 Spot Surface Course Placement/Replenishment includes Subgrade preparation, furnishing, hauling, spreading and shaping materials in accordance with the requirements.

MATERIALS

2.1 Surface Course Material will be in accordance with the subsection 3.2 of these specifications. Only commercial sources of aggregate will be accepted, except surfacing material may also be purchased from the government, where available, by filling out a form 2600, paying the required fees, and obtaining a permit.

REQUIREMENTS

3.1 Subgrade Preparation. Prepare Subgrade to receive Surface Course Material at locations as designated on-the-ground by the Forest Service on roads listed below. Prepare the Subgrade by shaping the Roadbed to approximately the original cross-section and consistent with adjacent sections.

3.2 Furnish, haul and spread Material at locations designated on the ground by the Forest Service (FS). Compact the aggregate by operating spreading and hauling equipment over the full width of each layer of the aggregate, or by other methods as specified below.

Road Number	Type Material	Finished Compacted Thickness Specified	Total Quantity (Tons or cu.yds.)	Compaction Method
6903 (MP 0.00 – 0.02)	Geotextile Fabric[4/]	15'L x 30'W	50 SY	See 3.2 Above
6903 (MP 0.00 – 0.02)	Pit Run Gravel[1/]	As Directed by USFS	30 CY (39 CY)[2/]	See 3.2 Above
6903 (MP 0.00 – 0.02)	Crushed Aggregate[3/]	As Directed by USFS	15 CY (19.5)[2/]	See 3.2 Above
6903 (MP 0.19 – 0.22)	Pit Run Gravel[1/]	150'L x 13' x 8"D	49 CY (64 CY)[2/]	See 3.2 Above
6903-C (MP 0.14 – 0.18)	Pit Run Gravel[1/]	200'L x 13' x 8"D	65 CY (85 CY)[2/]	See 3.2 Above
6903-C (MP 0.32 – 0.35)	Pit Run Gravel[1/]	150'L x 13' x 8"D	49 CY (64 CY)[2/]	See 3.2 Above

[1/]County Line Lake Pit (as shown on Sale Area Map)
[2/]Quantity of Material in ( ) = Approximate Loose Volume
[3/]Furnish, haul and place. Must meet M-DOT Designation 22A.
[4/]Furnish, haul and place. Must be equivalent or greater than US 205-8 oz. non-woven geotextile fabric.

SAMPLE CONTRACT

3.3 Variations. The Purchaser will be required to furnish weight tickets to the FS for each load of commercially obtained crushed aggregate prior to the final inspection. For aggregate purchased from the government, a count of truck loads will be required in addition to finished depth checks for the placed and compacted aggregate. Widths and lengths will be as staked or from schedule. When it is mutually agreed that all or part of the Surface Course Material is not needed, the estimated cost of surfacing not placed shall be charged to the Timber Sale Account in accordance with **IT.3.3**.

T-8340 Drainage Structure Maintenance

DESCRIPTION

1.1 This work consists of maintaining and/or installation/removal of Drainage Structures and related items such as: inlet and outlet channels, existing riprap, trash racks, necessary geotextiles, pipes, and drop-inlets.

MATERIALS

2.1 All Materials used in the maintenance and/or installation/removal of Drainage Structures shall conform by type and specification to the Material in the structure being maintained or as indicated in the subsection 3.3 below.

REQUIREMENTS

3.1 Drainage Structures and related items shall be cleared of all foreign Material deposited above the bottom of the structure and all vegetative growth which interferes with the water flow. Material removed that cannot be incorporated into maintenance work shall be uniformly placed on fill slopes unless agreed otherwise.

3.2 Perform maintenance to insure the proper functioning of the head walls, aprons, inlet assemblies, riprap, trash racks and other facilities related to the Drainage Structure.

3.3 Install/remove ditches, drainage dips, rock crossings and/or culverts as shown below, and as marked on the ground. Installation of structures shall not begin without the presence of a FSR unless agreed to in writing by the FSR.

Road Number	Location	Remove/Install	Type of Structure	Size	Quantity
6903	MP 0.00 – 0.02	Install	Hardened Dip	1/	1

1/ **Per Typical Drawing – Typical Hardened Dip**

3.4 Installation shall be in accordance with construction industry standards and practices.

3.5 Culverts designated for removal/disposal shall become the property of the Purchaser and shall be disposed of properly.

SAMPLE CONTRACT

3.6 Temporary culverts provided by the USFS shall remain the property of the government.

3.7 Bridges. Any miscellaneous parts needing repair or replacement during normal use of any bridge during haul shall be considered maintenance. This includes minor items such as object markers, running planks that have loosened or cracked deck boards, or drainage structures which may become plugged. Bridge decks that are dirt and dust covered shall be cleaned to allow for proper drainage and for safety of the user.

T-8350 Roadway Drainage Maintenance

DESCRIPTION

1.1 This work consists of providing Post Haul drainage on roads.

MATERIALS

2.1 All Materials used in the maintenance and/or installation/removal of Drainage Structures shall conform by type and specification to the Material in the structure being maintained, or as indicated in subsection 3.3.

REQUIREMENTS

3.1 Upon completion of work, shape the roadway to provide for the removal of surface water. The roadway need not be passable to vehicles (ML-1 roads). Repair and reinstall waterbars, barriers or berms existing prior to the Purchaser's operation. Areas where water is ponded by existing centerline profile sags in through cuts may be left untreated.

3.2 Any of the following methods are acceptable for use at eroded or rutted locations:
(a) Method A: Outsloping the roadbed at not less than ½ inch per yard of width.
(b) Method B: Insloping the roadbed at not less than ½ inch per yard of width.
(c) Method C: Water bar roadbed at locations staked on the ground and construct as shown on the enclosed detail.
(d) Method D: Crown the roadbed as shown in the attached detail as the typical section for that length of road.

3.3 Drainage structures located in roadbed through fills and natural watercourses shall be fully functional without obstructions, including inlet and outlet channel within 20 feet of the structure. **(All structures within termini indicated in WO-KT-FT.3.1# Summary Table).**

3.4 Entrance Devices. Upon completion of work, replace entrance devices to effectively

eliminate access by motorized vehicles (ML-1).

SAMPLE CONTRACT

3.5 Seed and fertilize all disturbed areas in accordance with requirements set forth in T-8410 Vegetation Establishment.

T-8360 Composite High Clearance Road Maintenance

DESCRIPTION

1.1 This work consists of making limited use roads passable for project use by Purchaser and providing drainage from the traveled way and roadbed.

MATERIALS

2.1 Required materials are listed in subsection 3.2.

REQUIREMENTS

3.1 Traveled Way

A. Purchaser may smooth or fill existing cross ditches and waterbars and, by agreement, modify existing road junction to enable vehicle access. Prior to beginning haul and resumption of haul after an extended stoppage:

1. Remove brush, fallen trees, rocks, and other debris from traveled way, including turnouts, turnarounds, and other locations that interfere with needed maintenance. No object extending over 4 inches above the road surface shall remain within the 12 feet usable traveled way.
2. Center the usable width of the roadbed or position away from the fill slope.
3. Cut and remove standing or down trees, logs, brush, and limbs from within the 12 feet usable traveled way. Remove encroaching limbs to a height of 14 feet above the traveled way surface. Scatter material not meeting utilization standards outside and below the roadbed on the fill side. Limb and remove designated timber which meets utilization standards or deck at agreed locations.
4. Place all removed material away from drainages and in locations previously agreed to in writing by the FSR.
5. During use, maintain drainage structures including dips, ditches and culverts in a usable condition and surface in a flat, Insloped or Outsloped, or Crowned usable condition, **per Typical Drawing.**

3.2 Drainage Facilities. Clean and recondition drainage facilities in accordance with T-8310 Ditch Cleaning and T-8340 Drainage Structure Maintenance. **See Table in T-8340 for new structures; maintain all other structures per 3.1, Item 5 above within termini indicated in WO-KT-FT.3.1# Summary Table.**

3.3 Slough and Slides

1. Slough and Slides may be left in place provided surface drainage is adequately provided and at least 12 feet of width is available for vehicle passage.

SAMPLE CONTRACT

2. Purchaser may reposition or ramp over Slides and Slough when the Traveled Way is less than 12 feet providing the material is capable of supporting vehicles. Limit Outslope to no more than six percent.
3. Reposition Slough or Slide materials, which are not capable of supporting a vehicle, on the roadbed to provide the 12 feet width. When directed by Forest Service, Slough or Slide material will be removed under Section T-8320 Slide, Slump, and Erosion Repair.

3.4 Slumps, Eroded areas, and Washouts
1. Drain the roadbed immediately upgrade of Slumps and longitudinal cracks to prevent water from entering Slump area.
2. Slumps and longitudinal cracks at the edge of the roadbed shall not be considered a part of the usable width. Usable width may be reduced to ten feet in the area of the Slump.
3. Unless Forest Service agrees to material being placed on Slumps, ramp the Slumps on both ends into undisturbed roadbed to provide at least ten feet usable width. Use removed materials to guide vehicles to the ramp location or to aid in draining the area.
4. Eroded areas/washouts may be filled with suitable material and compacted by operating equipment over the fill area.

3.5 Posthaul
A. At the end of hauling or prior to entering into seasonal shutdowns or a period of extended inactivity:
1. Shape the traveled way and disturbed roadbed to provide functional drainage.
2. Reinstall removed cross ditches and waterbars and provide any additional drainage structures necessary to offset changes caused through use and maintenance.
3. Leave roads useable for high clearance vehicles. Remove or reshape Purchaser modifications at road junctions to leave the entrance as it was before use, or as agreed at the time of improvement.
4. Close all roads which were closed prieviously, using prior existing methodology.

T-8620 Miscellaneous Maintenance

DESCRIPTION

1.1 Maintenance of miscellaneous structures includes cattle guards, gates (this includes all types of closure devices such as logs, rocks, dirt berms, dirt and slash berms, metal gates, etc), signs, and other similar structures that have been previously installed to insure safe and efficient operation of the road.

MATERIALS

2.1 Any Materials needed in the maintenance of miscellaneous structures shall be similar in type and quality to the Material in the structure being maintained.

SAMPLE CONTRACT

REQUIREMENTS

3.1 Cattle guards. Loose rails shall be welded or bolted back in place.

Excess Material carried into the cattle guard shall be removed when drainage is blocked or when it reaches six inches from the bottom of the cattle guard frame. Drainage into and from the cattle guard shall be kept open.

3.2 Gates (and other closure devices). Gates shall be kept in good repair and made to swing easily. Hinges or latches shall be repaired if not operating properly. Brush and debris shall be removed from within the swinging radius. Weathered berms or wood piles shall be reconstructed to a height which discourages use and blocks the road.

3.3 Signs. Any signs needing repair or replacement shall be installed per sign placement detail or MUTCD direction. All roads shall have legible sign numbers. ML 3-5 roads shall have horizontal numbering and ML 1-2 roads shall have vertical numbers. The material used shall be as directed by the Forest Service Representative. All new signs must meet retroreflectivity requirements.

Road Number	Road Name	Location	Remove/Install	Type of Item	Size	Quantity
5134	FR 5134	1/	Maintain	Gate	3' x 20'	1
6903	FR 6903	MP 0.02	Remove/Install 1/	Berm	2/	1

1/ **Gate to County Line Lake Pit**

2/ **Per Typical Drawing for Earthen Berms/Closure Devices**

SAMPLE CONTRACT

Earthen Berms/Road Closure Devices (Typical Drawing)

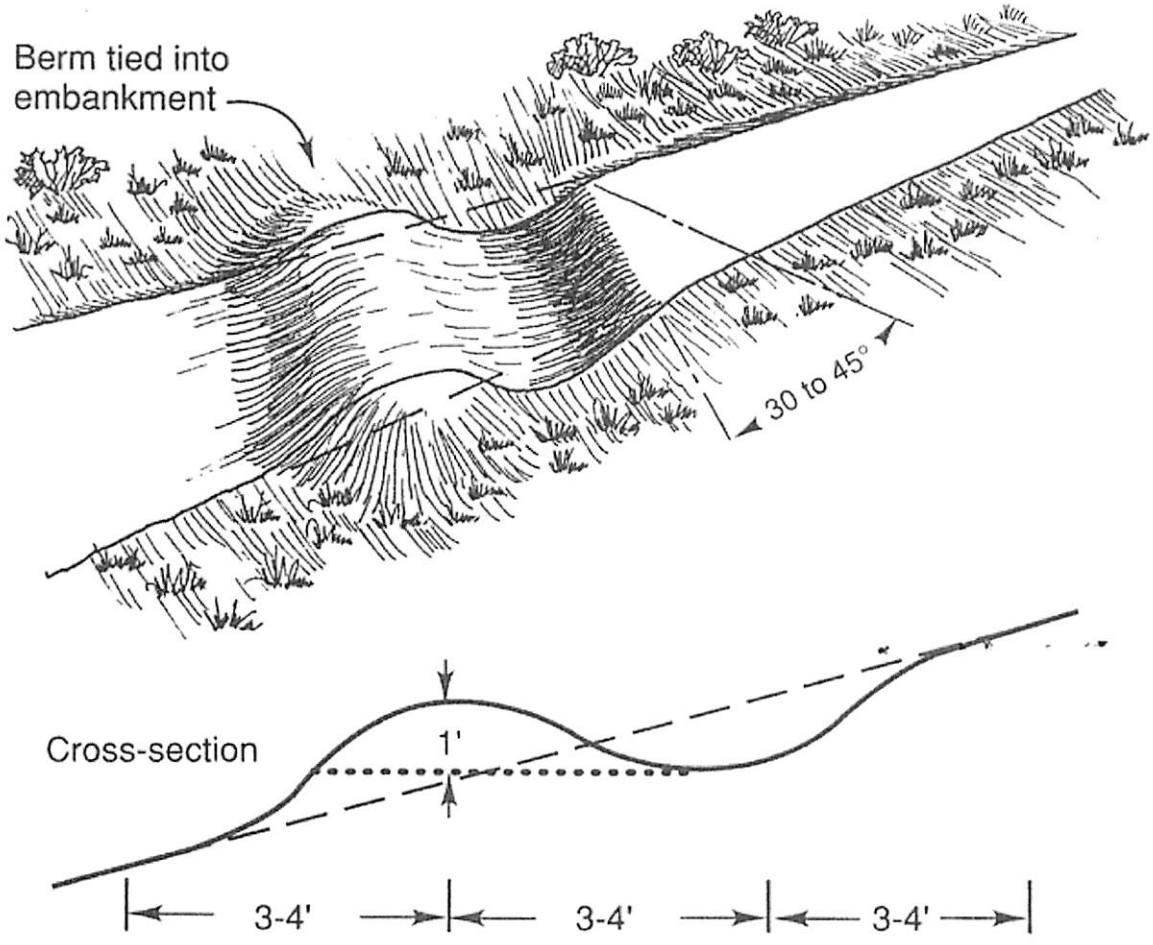

Earth berm/water bars are narrow, earthen ridges built across roads or trails. They divert water off and away from roads or trails into vegetated areas before it causes erosion. When properly built, they prevent exposed soil from moving, protecting the area until grass vegetation is firmly established.

As shown in the above drawing, the berm/water bar should be placed at an angle of 30 to 45 degrees, relative to the road, to allow for runoff to drain from the inlet, through the trench, and into the adjacent forest floor or vegetation.

Dig a trench, 12 to 18 inches below the surface of the road or trail, and extend it beyond both sides of the road or trail to prevent runoff from bypassing the water bar. The uphill end of the water bar should extend beyond the side ditch of the road and into an earth-berm to fully intercept any ditch flows. The outflow end of the water bar is to be fully open and extended far enough beyond the edge of the road or trail to safely disperse runoff water onto the undisturbed forest floor. When placement of the closure device does not require the berm to also function as a water bar for drainage, the trench will not be required.

Height of the berm will be approximately 4 feet. Rocks/boulders, logging slash, cull logs, and stumps may be incorporated into the ridge of earth during construction of the berm as long as proper drainage will be maintained and the road is completely blocked; unless otherwise agreed in writing.

SAMPLE
CONTRACT

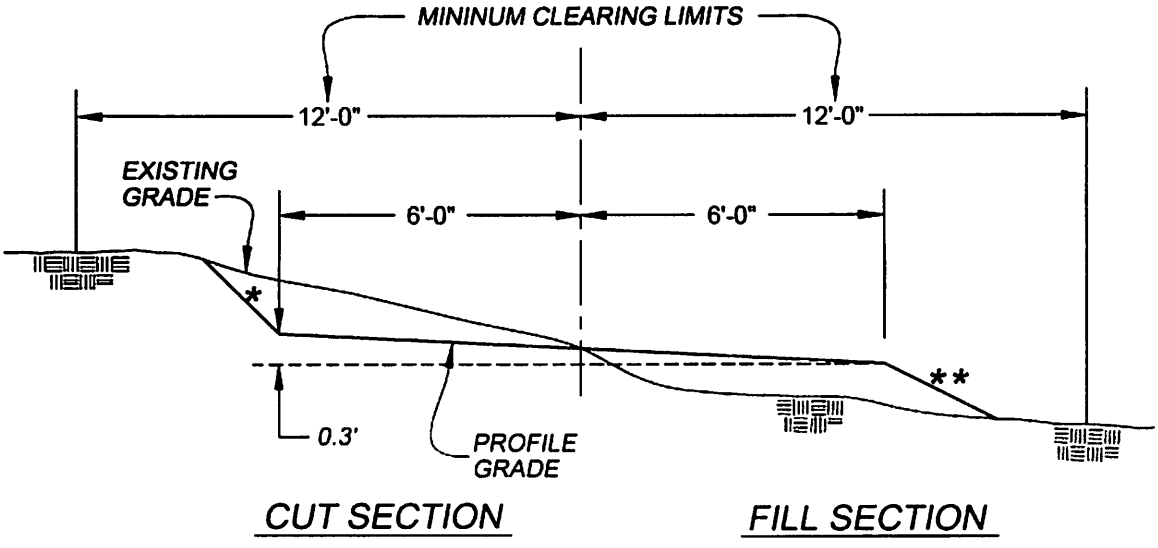

TYPICAL OUTSLOPE DETAIL

NOT TO SCALE

*BACKSLOPE AND DITCH SLOPES MAY VARY FROM 1H:1V TO 2H:1V WHEN CUTS ARE UNDER 2 FT. CUTS OVER 2 FT. SHALL HAVE SLOPES OF 2H:1V

**FILL SLOPES MAY VARY FROM 1-1/2H:1V TO 3H:1V

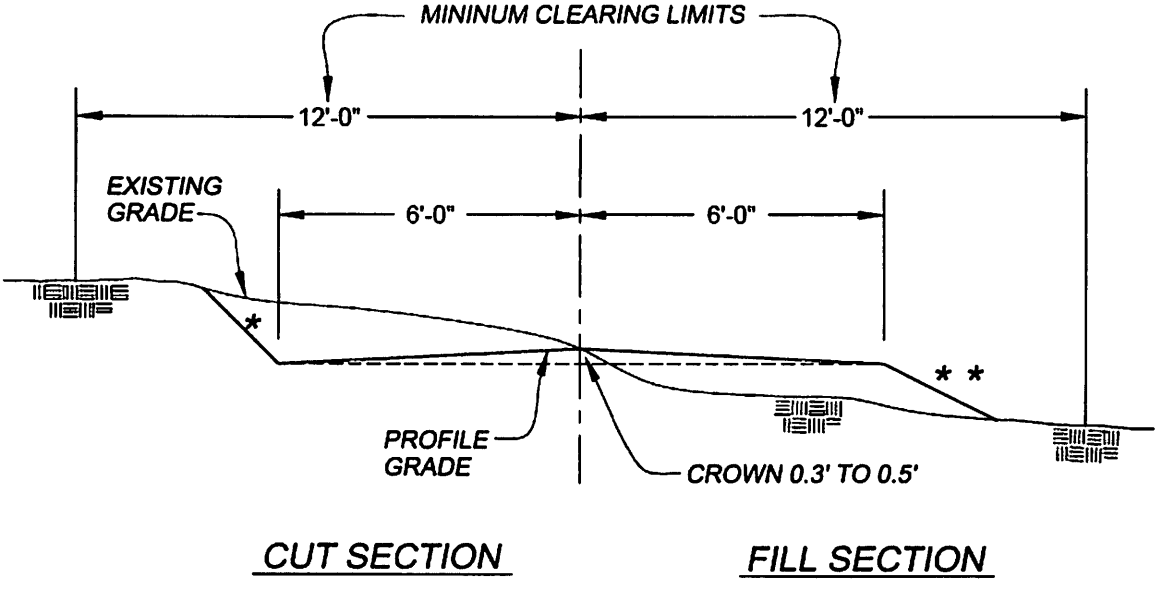

TYPICAL CROSS SECTION CROWN NO DITCHES

NOT TO SCALE

SAMPLE
CONTRACT

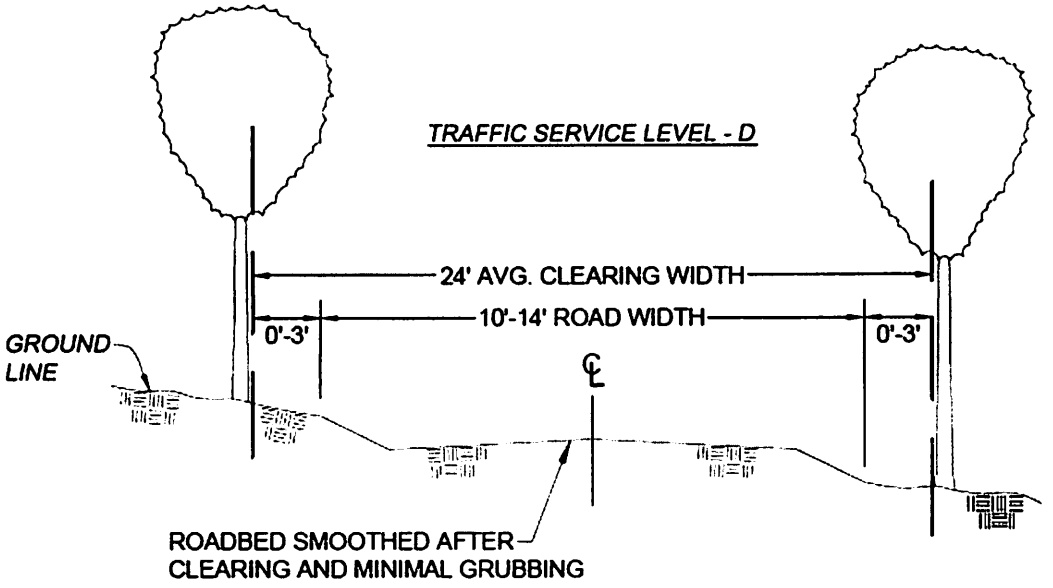

CROSS SECTION VIEW

WINTER ONLY ROAD STANDARD

NOT TO SCALE

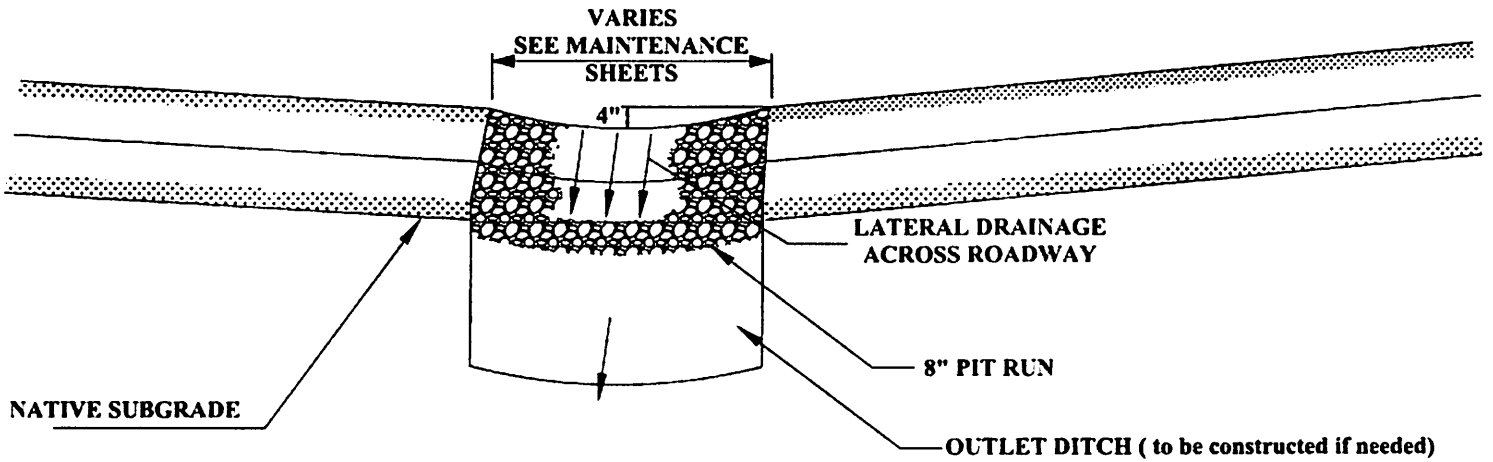

NOTE: HARDEDED DIPS WILL BE EXCAVATED 12" DEEP AND BACKFILLED WITH 8" PIT RUN. GEOTEXTILE SHALL BE PLACED UNDER ALL PIT RUN MATERIAL.

TYPICAL HARDENED DIP

SAMPLE CONTRACT

SAMPLE CONTRACT

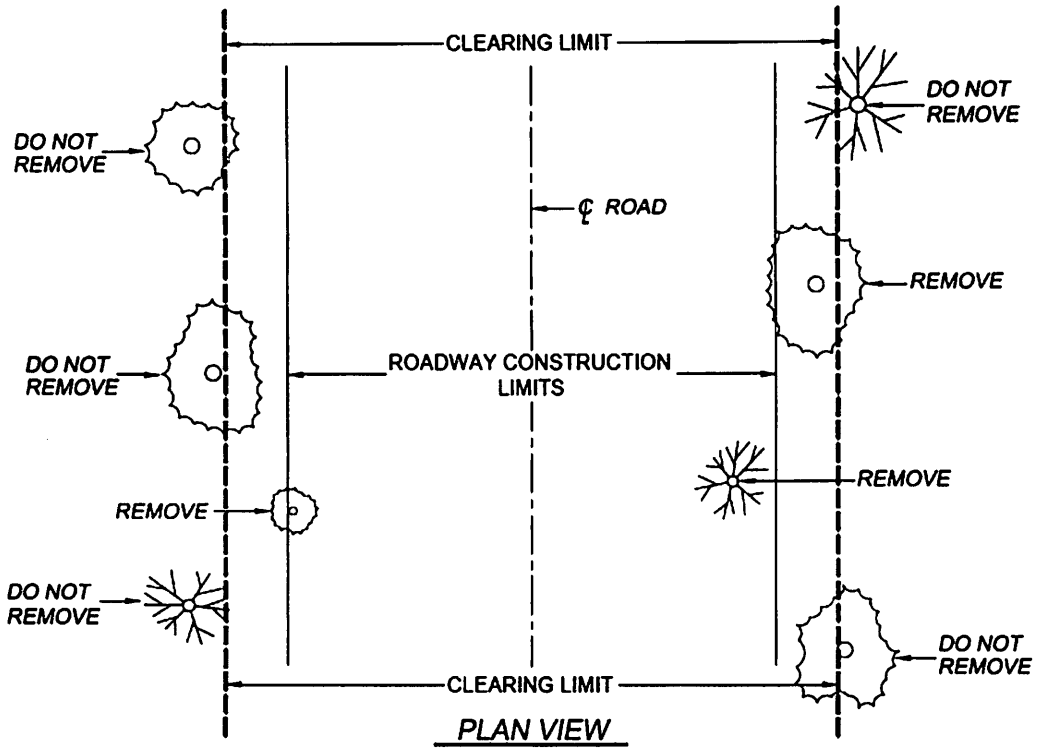

NOTE: TREES ON THE CLEARING LIMIT LINE ARE TO REMAIN UNLESS OTHERWISE DESIGNATED BY THE ENGINEER.

NOTE: YELLOW PAINT INDICATES TREES TO BE REMOVED.

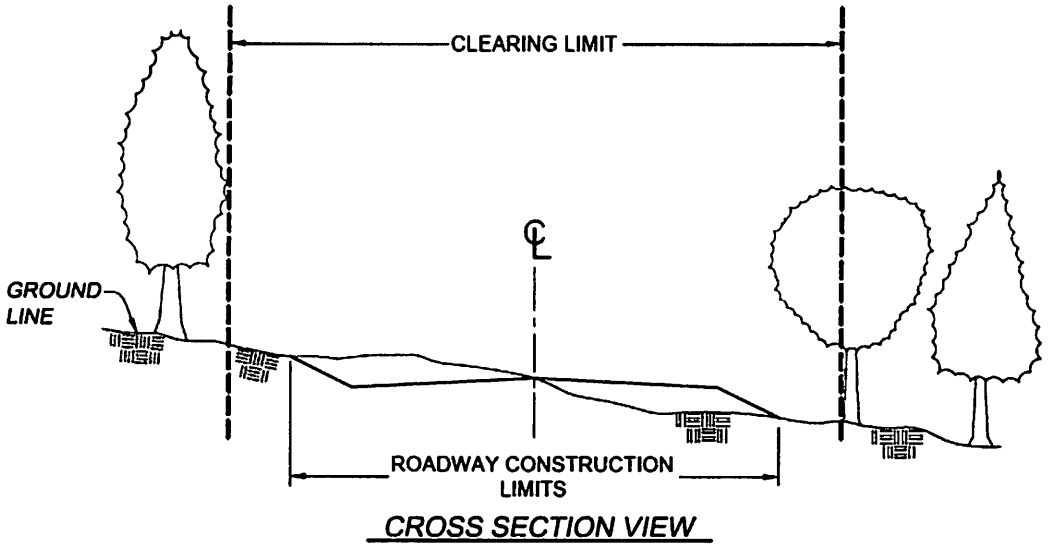

CONSTRUCTION STAKING
NOT TO SCALE

SAMPLE
CONTRACT

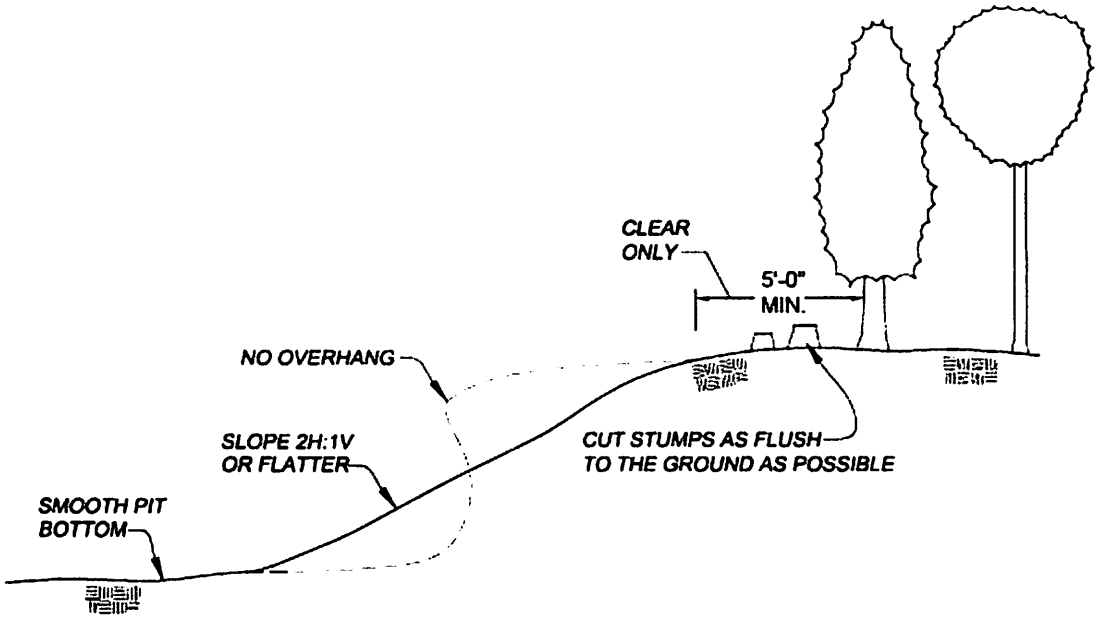

NOTE: TOPS, STUMPS AND TRUNKS SHALL BE DISPOSED OF AS DIRECTED BY THE ENGINEER. STUMPS SHALL BE SEVERED FROM ALL TREES. ALL TIMBER SHALL REMAIN PROPERTY OF THE GOVERNMENT. OVERSIZED ROCK SHALL BE DISPOSED OF IN EXISTING PILES OR AS DIRECTED BY THE ENGINEER. SMOOTH PIT BOTTOM TO REDUCE THE COLLECTION OF WATER. HAUL ROADS SHALL BE MADE SMOOTH AND REPAIRED OF DAMAGE CAUSED BY THE CONTRACTORS HAULING OPERATION OR EQUIPMENT.

BORROW PIT CLEAN UP

SAMPLE CONTRACT

Arrowhead Stewardship Contract

Supplemental Specifications to Special Provision KT-GT.9# - Stewardship Projects

PROJECT SPECIFICATIONS INDEX:

Project Name	**Page #**
Tree Felling/Girdling	SP-2
Opening Maintenance (Hand Tools Only)	SP-3 thru SP-4
Aspen Site Preparation	SP-5 thru SP-6

SAMPLE CONTRACT

ARROWHEAD STEWARDSHIP

Supplemental Specifications to Special Provision KT-GT.9# - Stewardship Projects

Wildlife Habitat Project – Tree Felling

Project Number[1]	Item	Unit of Measure	Quantity	Felling Location
1-001	Fell/Girdle Tree	Trees	**Total 471**	471 trees located in area between PU 9 and the Cisco Branch of the Ontonagon River and area between Co. Rd. 527 and PUs 6 and 7 (See Contract Area Map, Page 3 of 3).

[1]/ GPS coordinates of individual trees or groups of trees available on request. Trees to fell average 6"-10" DBH and trees to girdle average 14" DBH; the majority of trees are maple, with occasional yellow birch, black cherry, spruce or fir. Contractor is responsible for assessing tree size and felling direction for cost determination.

Objective: Felling or girdling of trees to release long-lived conifer trees (hemlock, cedar, white pine) from competition thereby promoting its growth and survival as a seed source to propagate other conifers; this also improves wildlife habitat for species using dead standing trees and downed logs.

Specifications:

1. Trees designated to fall or girdle are located across a large area (around 75 acres) including :

   - The north boundary of the treatment area is marked with a Single-Slash Orange-Painted Boundary (with stump mark) lying north and west of Payment Unit 9; down along CR 527 to the Cisco Branch of the Ontonagon River. On the East side of CR 527, the treatment area lies between CR 527 and the western boundaries of Payment Units 6 and 7, then a Single-Slash Orange painted boundary follows the Section line west to the River. Single-Slash boundary trees face into the treatment area.

2. **All trees to fell or girdle must be done with hand-tools only (can include power saws).**
3. All trees to be felled are banded with a **Single-banded PINK paint** mark at eye level with a stump mark (approximately 90% of trees).
4. **Double-banded PINK paint** indicates trees may be girdled and not felled, due to high potential for damage to residual (approximately 10% of all trees). Girdling of these double-banded trees is defined as 2 parallel horizontal cuts (chainsaw kerf width, can use an axe) a minimum of 2" apart completely around the bole of the tree, with depth of cuts defined as through the bark and cambium only (so as not to weaken the bole). Contractor may fell these trees if they determine they can be felled without causing damage to residual trees and no additional trees have to be marked for drop zones.
5. Trees to be felled may need to be limbed and/or bucked so the bole of tree lies in a horizontal resting position where all portions of the bole lie within two feet of the ground.
6. Trees will be felled away (where possible) from long-lived conifer trees (pine, hemlock, cedar), which may be located adjacent to the felled tree.
7. Felling will be done in a manner to avoid unnecessary damage to live or dead standing trees >= 5.0 inches DBH and to comply with **Contract Provision GT.3.2 – Protection of Residual Trees**. If drop-zones are needed to safely fell the tree, additional cut trees must be agreed to by the COR prior to cutting. Additional cut trees may be flagged for review by the COR. Sub-merchantable sized trees (<5.0" DBH) or cull trees (>=5.0" DBH) may be felled in drop zones in order to safely fell the marked tree. Unnecessary felling is not permitted. Contractor will earn additional Credits for any additional authorized tree felling (trees >=5" DBH).
8. All Stump heights must leave evidence of paint mark below stump height.

SAMPLE CONTRACT

ARROWHEAD STEWARDSHIP

Supplemental Specifications to Special Provision KT-GT.9# - Stewardship Projects

Wildlife Opening Maintenance

Project Number[1]	Item	Unit of Measure	Quantity	Location
2-015	Opening Maintenance	Acres	**1 acre**	Opening's northern boundary is south of and parallel to Co. Rd. 527 and directly south of the Kakabika Falls Parking Area; Eastern boundary runs parallel along the Cisco Branch of the Ontonagon River. (See Contract Area Map, Page 3 of 3)

[1]/ Contractor is responsible for assessing tree size and felling direction for cost determination.

Objective: To reduce encroachment of trees and shrubs within existing wildlife opening by felling and girdling trees and shrubs to improve wildlife habitat.

Specifications:

1. The boundary is marked on the ground by a Single-Slash **Orange-Painted Boundary** (with stump mark) facing in to the treatment area.
2. **All maintenance activities shall be accomplished by the use of hand tools only** (chainsaws, brush saws, axes, etc.): No equipment, or vehicles are allowed within the treatment area.
3. **Protection of Sensitive Resources** (reference **KT-GT.2.4#**): No felling or piling of any tree or shrub within approximately 5 feet of a protected site or artifact, which might include but are not limited to: glass bottles, cans, metal pieces, unidentifiable objects & artifacts of any kind, rock piles, boulders or foundations and any depressions in the ground or a created mound. Objects may be obscured from view by grass, shrubs, or dense seedlings. When walking and working in site, take extra precautions to avoid damage, movement or breaking of any of these objects. Objects may not be removed from the site.
4. **Seasonal Restrictions: No cutting from May 1 – June 30** to protect Sensitive Species. Treatment activities within the wildlife opening may only occur during the snow-free period in order to protect Sensitive Resources. Contractor shall notify the COR at least 2 days prior to activities to coordinate on the ground before treatment commences.
5. **Trees marked with a single PINK-horizontal band at eye level and stump mark are Leave Trees: do not cut or girdle** (these include approximately 8 elm and black cherry trees).
6. Cut all shrubs EXCEPT crabapple trees and hawthorn species. Avoid felling of cut trees on these leave species.
7. **Do not fell any trees or shrubs into Protected Streamcourses** (identified on Contract Area Map).

SAMPLE CONTRACT

Felling & Girdling:

8. Girdle all hardwood trees (except crabapples) greater than 8" DBH (diameter at 4.5 feet from the high side of the stump): girdling is defined as 2 horizontal cuts (chainsaw kerf width) a minimum of 2" apart, with depth of cuts defined as through the bark and cambium only (so as not to weaken the bole).
9. In order to prevent re-sprouting of aspen, girdle all trees in the manner described in Item 8. For small diameter aspen (1" – 3" DBH) cut trees at such an angle from one side as to leave approximately 1-2 inches of bark with enough wood to create a "hinge" at 12 – 16 inches from ground level. Do not completely sever the stem.
10. Fell all other trees within the treatment area regardless of diameter. Fell (completely sever from stump) and pile conifer species on top of each other to create large brush piles to the extent practical. Spruce/balsam fir >10" DBH may be girdled and not felled.
11. Stump heights: for trees > 10" DBH stump heights shall not exceed 16 inches; and for trees and shrubs <10" DBH stump heights shall not exceed 6 inches. All stumps must be cut horizontal to the ground (no sharp stubs).

ARROWHEAD STEWARDSHIP CONTRACT

SAMPLE CONTRACT

Supplemental Specifications to Special Provision KT-GT.9# - Stewardship Projects

Aspen Site Preparation

Optional Projects:

Project Number *	Acres
3-004	9

A. **Site Preparation for Aspen Natural Regeneration**

1) All tree species over 4 feet tall and up to 5 inches DBH (except aspen up to 2 inches DBH, and HEMLOCK, WHITE CEDAR, ELM, PINE, TAMARACK, and BLACK CHERRY) shall be cut.

2) Small clumps of young balsam, hemlock or other conifer species should be maintained where they occur in the aspen clearcut after the timber sale is complete. Retain two to three small clumps of low, dense conifers (about 100 square feet to 1000 square feet in size) per acre, as available, in a manner that still meets aspen regeneration objectives for the stand.

3) Shrubs are not required to be cut.

4) Annuals such as grasses, sedges, ferns, etc. are not required to be cut.

B. **Felling Specifications**

1) All trees required to be cut shall be cut below the lowest live limb except when prevented by natural obstacles.

2) Trees required to be cut shall be completely severed from the stump and lie flush to the ground. No tops shall be left hanging in standing trees.

3) The stump height of cut trees shall not exceed 6 inches above the ground level on the high side of the stump, or 4 inches above natural obstacles.

4) The cut angle of such stumps shall not exceed 20 degrees measured from a horizontal plane extending from the stump at ground level.

5) No boundary trees or Reserve Trees shall be cut or damaged. Boundary trees (KT-CT.3) are defined by 3 ORANGE paint slashes at eye level, with stump mark, for exterior boundaries or 2 ORANGE paint slashes at eye level, with stump mark, for interior boundaries. Reserve Trees (KT-CT.3#) are ringed with a single band of ORANGE paint at eye level, with stump mark.

6) All snags shall not be cut.

SAMPLE CONTRACT

Supplemental Specifications to Special Provision KT-GT.9# - Stewardship Projects

Aspen Site Preparation

C. **Equipment Requirements.**
   1) The Contractor will provide cutting tools and equipment that are suitable for the job.
   2) All power tools shall be equipped with Forest Service approved spark arrestors and in good working condition.
   3) Heavy equipment (such as processors used in logging) are permitted to do this work when ground conditions support the equipment. Site preparation work may be performed concurrent with logging operations. (Reference Special Provision KT-GT.3.1.4# for operating restrictions)

D. **Road Use and Maintenance.**
   1) All roads leading into each project area are to be kept open and free of any debris that may occur as a result of the work.
   2) All roads used by the Contractor will comply with Special Provisions KT-FT.1.2# - Use of Roads by Contractor and KT-FT.3.1# - Road Maintenance Requirements of this Contract.

E. **Slash Treatment.**
   1) All slash/felled stems that fall outside of the Project Area boundary shall be pulled back into the Project Area.
   2) Within a strip 10 feet wide measured from the cleared edge of any numbered Forest Service Road, all slash resulting from the Contractor's site preparation activities shall be removed. Within an adjacent strip 10 feet in width, this slash shall be lopped and scattered to lie within 3 feet of the ground. All slash shall be removed from all road ditches or other drainage structures.