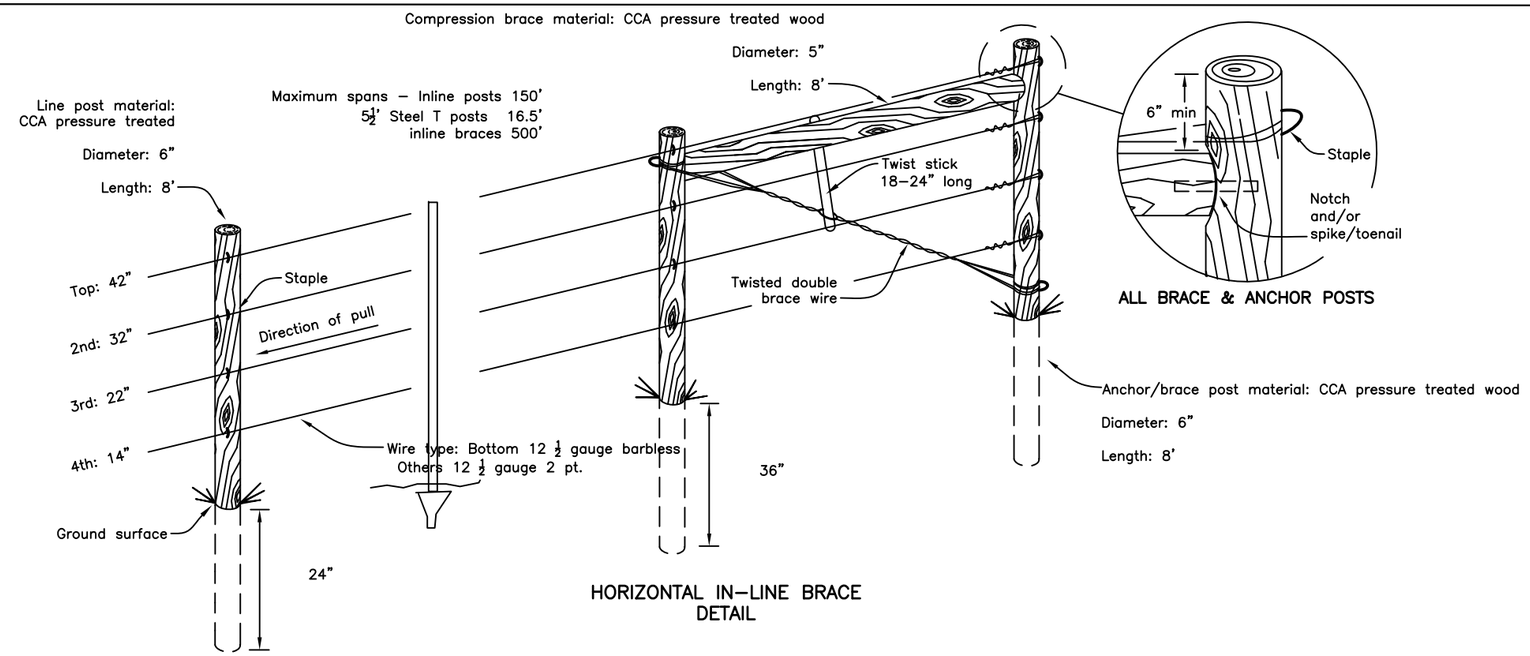

HORIZONTAL IN–LINE BRACE
DETAIL

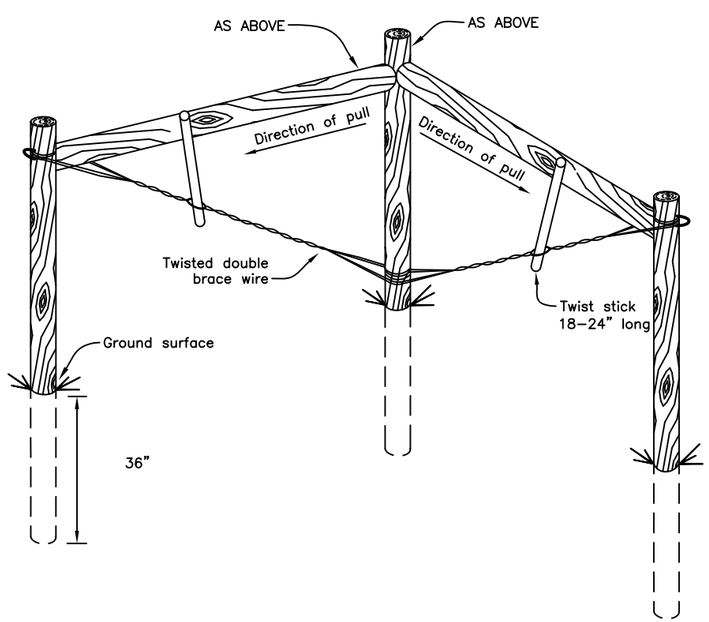

HORIZONTAL CORNER BRACE DETAIL

Corner angle 90° or less

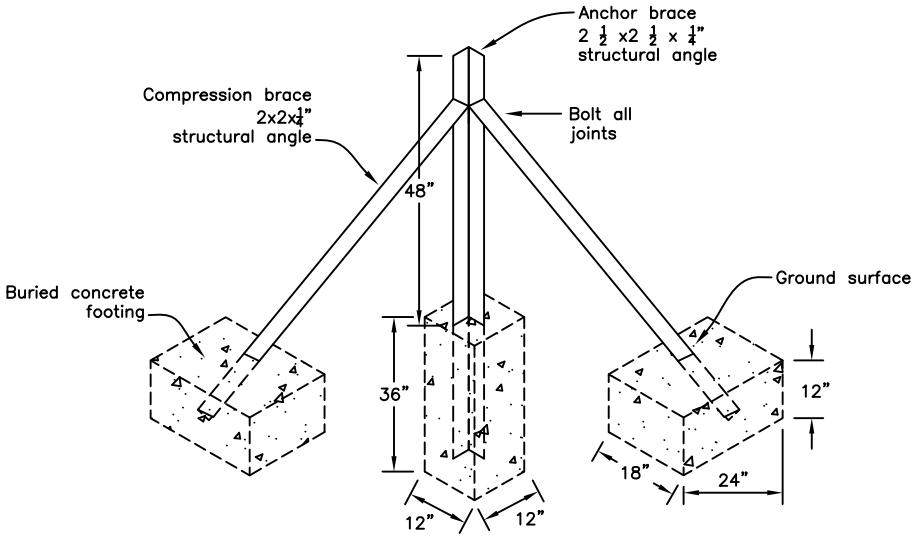

ANGLE IRON CORNER/INLINE BRACE

USED ONLY WHERE POST DIGGING IS IMPRACTICAL.
SEE NOTE BELOW FOR ALTERNATE METHOD TO FOOTINGS.

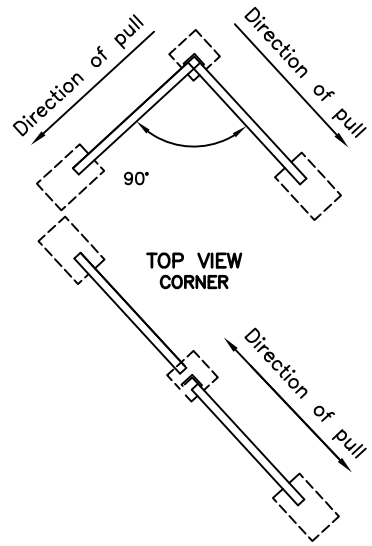

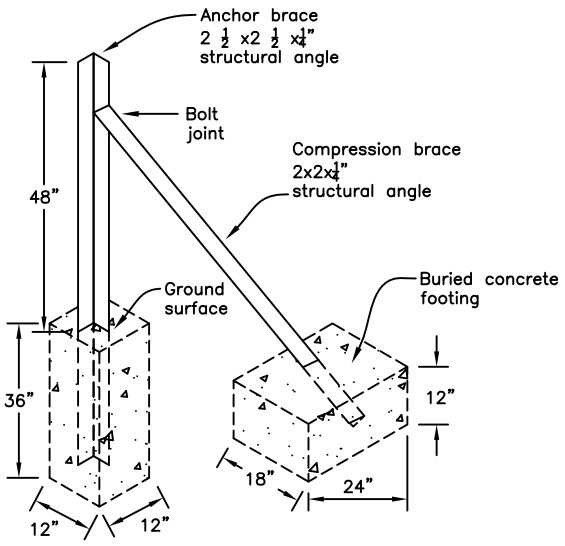

ANGLE IRON END BRACE

NOTE – Alternate for concrete is to drill an oversize hole in rock, insert iron, and grout.

Not to scale
Standardized drawing must be adapted to specific site

ANGLE IRON BRACE DETAILS

OP: _____

_____ ***COUNTY*** ***MONTANA***

Panels of woven wire or board can be used. Panels built separate and tied to fence with light wire, then during floods ends can break loose and not disturb main fencelines.

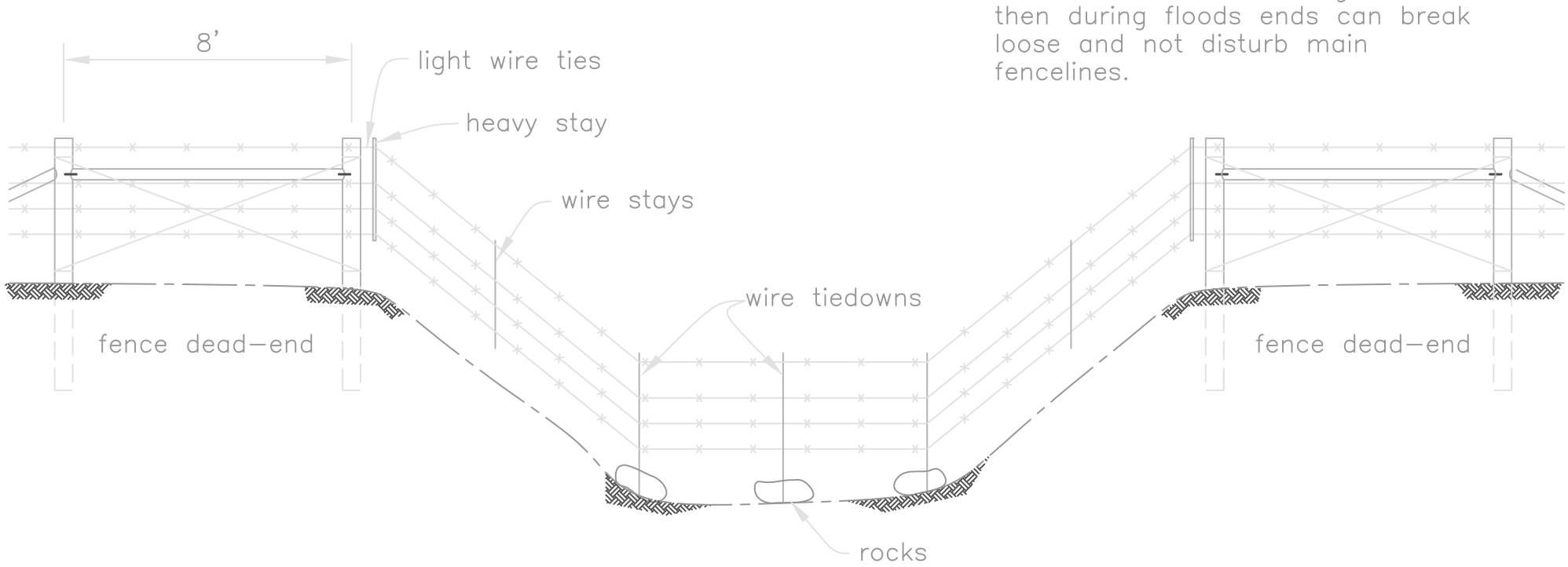

DETACHABLE WIRE PANEL W/ROCK ANCHORS
FOR DEEP WASHES AND LIVE STREAMS

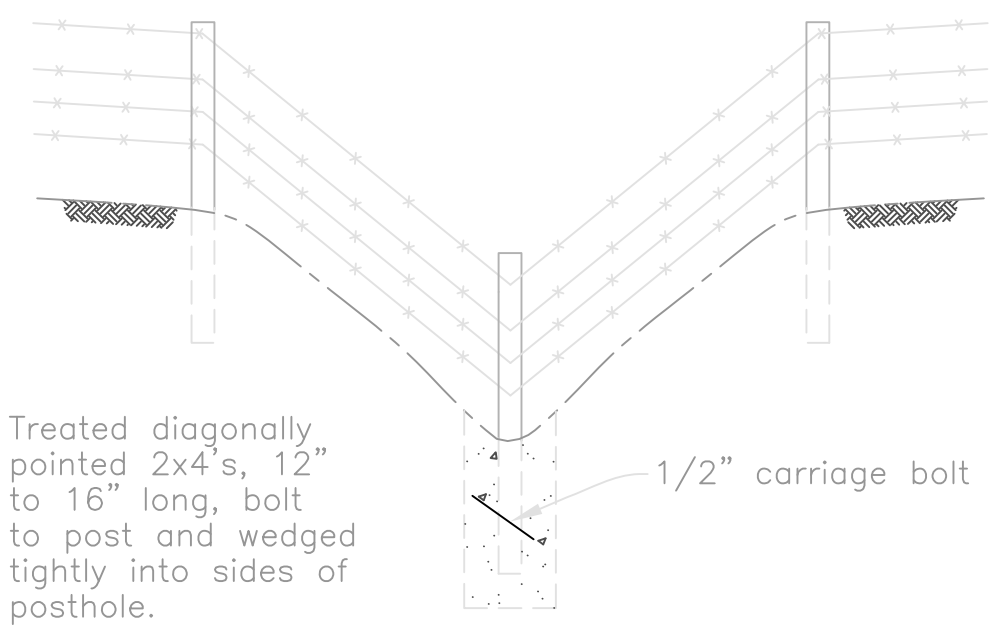

FENCE POST ANCHOR

TIEDOWN DETAIL

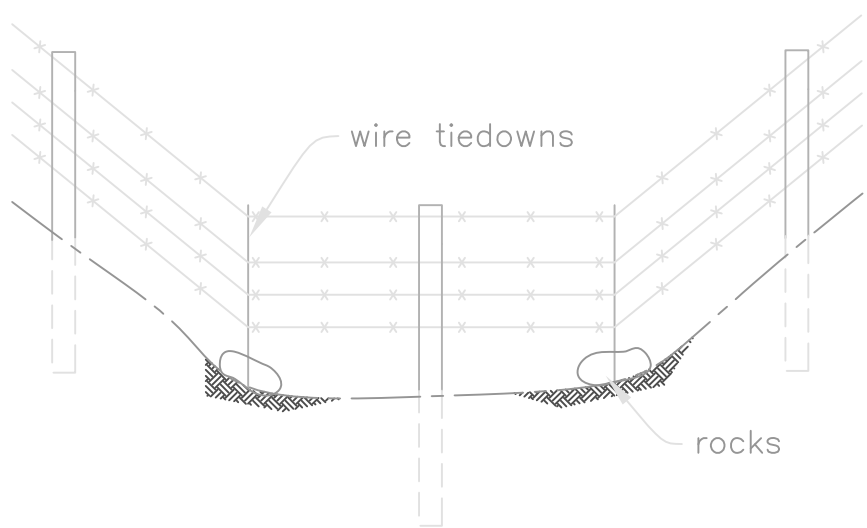

ROCK ANCHORS IN DRY DRAWS
SQUARE ROCK CRIBS ALSO USEFUL

Drawing not to scale. Standardized drawing must be adapted to the specific site.

Road crossing – 16' wide

Trail gates vary, 6'–10' wide, depending on terrian and needs

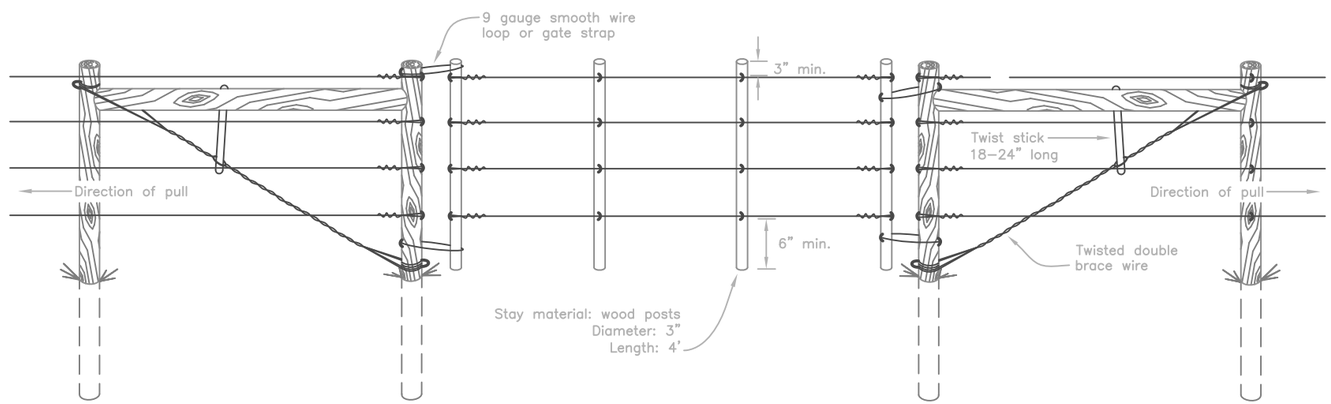

GATE DETAIL

GATE DETAILS

JACK LEG FENCE

Poles and bucks to be treated.
Buck sticks 6' long.
All material trimmed of knots and snags.

Buck sticks to be mortised to provide tight joint.

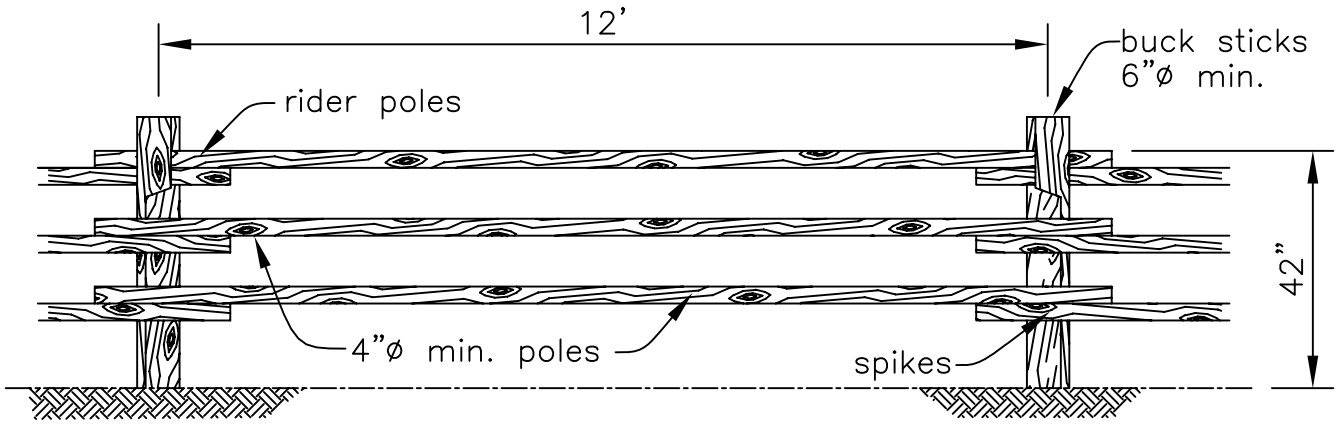

ELEVATION SHOWING POLES AND BUCKS

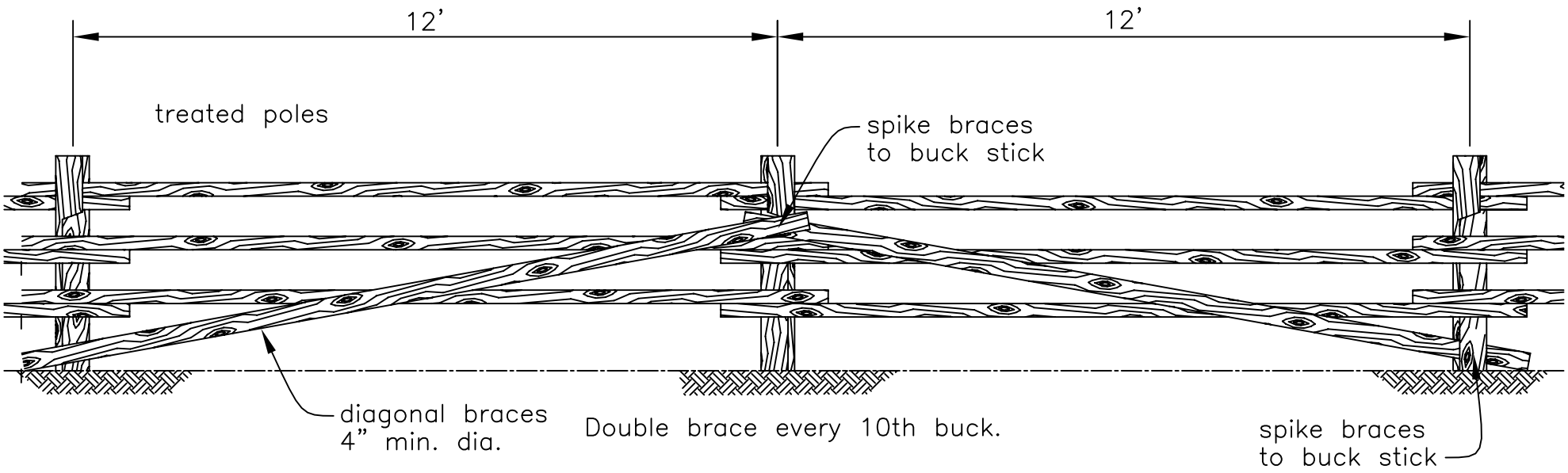

ELEVATION SHOWING DIAGONAL BRACING

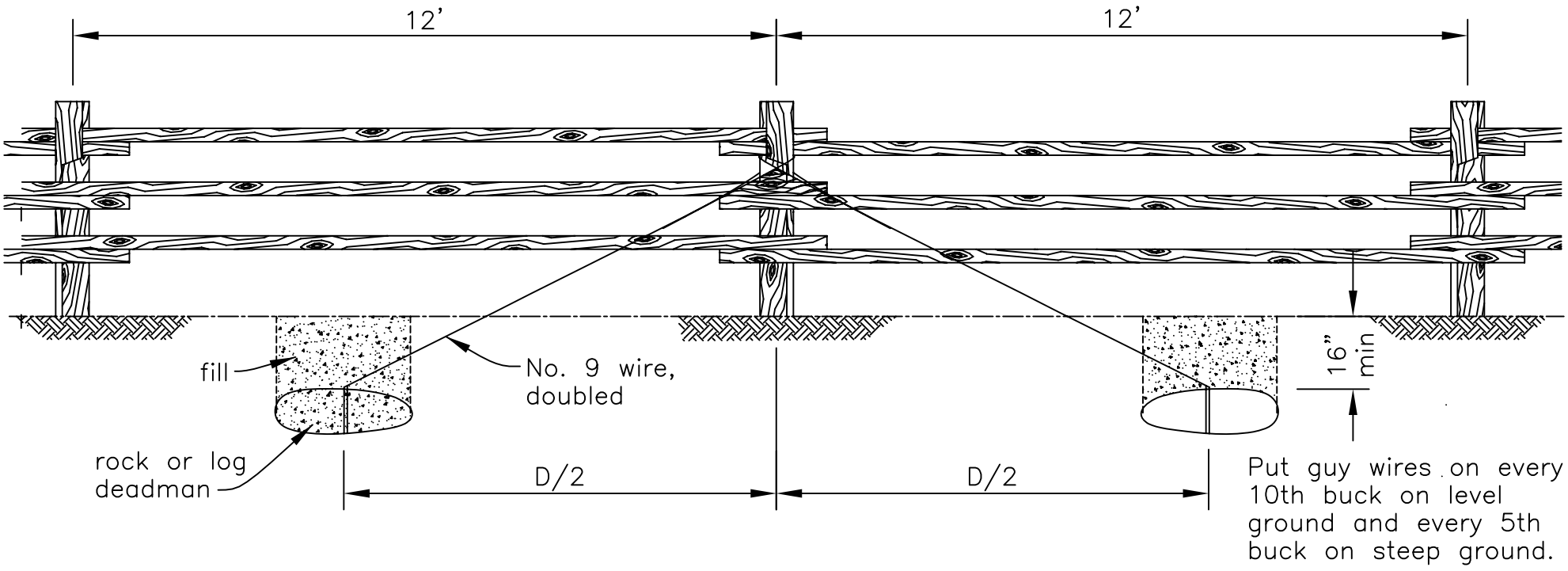

Guy wire bracing for high wind areas

Drawing not to scale. Standardized drawing must be adapted to the soecific site.

JACK POSTS

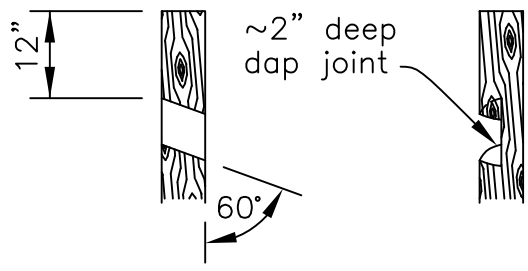

Both buck posts to be notched as shown.

BUCK POST JOINT DETAIL

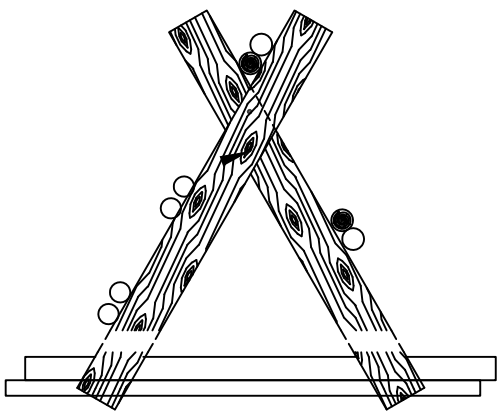

MUD SILLS FOR WET GROUND.

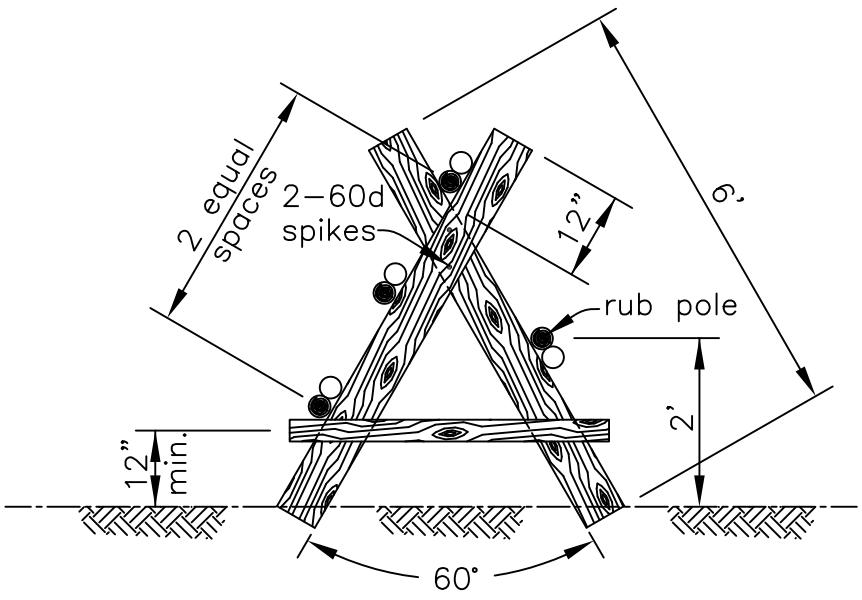

BUCK AND 3–POLE FENCE

1. Spikes shall be used as fasteners. Two spikes shall be used fasten poles, braces and buck ties to buck posts.
2. Poles, braces and buck posts shall be of material as shown in the specifications.
3. Angle of buck should not be less than 60°. Angle should be 80° on untimbered terrain where fence will be subjected to high winds.

Drawing not to scale. Standardized drawing must be adapted to the specific site.