Region: Pacific N-West
National Forest: Deschutes
Ranger District: Bend/Ft Rock

U.S. DEPARTMENT OF AGRICULTURE - FOREST SERVICE
TIMBER SALE CONTRACT
(Ref. FSM 2430, FSH 2409.18)

FS-2400-3T (6/06)

Sale Name: *Frosty Decks*	Contract Number	Award Date	Termination Date (BT8.2)
Purchaser's Name and Complete Address:			*10/31/2014*
	Total Sale Acres	Acres to be Cut	Type of Sale
	6	*6*	**Premeasured**
	Legal Description of Sale Area (BT1.1): Sections 8, 16, and 17, T.19S.,R.8E., Surveyed, WM, Deschutes County, Oregon		

The parties to this contract are the United States of America, acting through the Forest Service, United States Department of Agriculture, hereinafter called Forest Service, and _____, hereinafter called Purchaser. Standard Provisions of this contract begin on page 2. Specific Conditions are given below. Numbers in parentheses refer to Standard and Special Provisions. Forest Service address to receive payments (BT4.0): USDA Forest Service, (at address on Bill For Collection). Measurement will be done before felling (BT6.8).

Included Timber (BT2.1, BT2.2, BT2.4, BT3.1, BT4.0, and BT6.4)

				Minimum Specifications					Payment Rates per Unit of Measure		
				Merchantable Tree		Piece Required to be Removed					
Species	Product	Estimated Quantity	Unit of Measure	DBH (Inches)	No. of Minimum Pieces per Tree	Length (Feet)	D.I.B. at Small End (Inches)	Net Measure in % of Gross Measure	Base Rates $	Bid Rates $	Required Slash Disposal $
Lodgepole Pine and Other Coniferous Species	Fuelwood	299.00	Cords	N/A	1	8	3.0	N/A	5.00		5.06
Timber Subject to Agreement Under Special Provision CT2.11#											
Landing Piles	Misc-Conv	unestimated	Cords	N/A	N/A	N/A	N/A	N/A	.25		
Total Quantity		299.00	Cords	**Total Sale Value $**							$1,512.94

Schedule of Payment Units

Payment Unit Number	Approximate Acres	Species	Product	Quantity	Unit of Measure	Total Payment $ 1/	Total Associated Charges $ 2/
001	1	Lodgepole Pine and Other Coniferous Species	Fuelwood	64.00	Cords		323.84
		Total PU Quantity And Value		64.00	Cords		
002	1	Lodgepole Pine and Other Coniferous Species	Fuelwood	24.00	Cords		121.44
		Total PU Quantity And Value		24.00	Cords		
003	1	Lodgepole Pine and Other Coniferous Species	Fuelwood	13.00	Cords		65.78
		Total PU Quantity And Value		13.00	Cords		
004	1	Lodgepole Pine and Other Coniferous Species	Fuelwood	38.00	Cords		192.28
		Total PU Quantity And Value		38.00	Cords		
005	1	Lodgepole Pine and Other Coniferous Species	Fuelwood	108.00	Cords		546.48
		Total PU Quantity And Value		108.00	Cords		
006	1	Lodgepole Pine and Other Coniferous Species	Fuelwood	52.00	Cords		263.12
		Total PU Quantity And Value		52.00	Cords		

Inapplicable Standard Provisions:	List of Special Provisions:
BT4.211 BT4.4	CT2.11#, CT2.35# (OPTION 1), CT4.211, CT4.212, CT4.4, CT5.12#, CT5.31#, CT6.405, CT6.42#, CT6.7, CT6.74#, CT6.8, CT6.81, CT6.84 (OPTION 1), CT7.1, CT7.2, CT7.201, CT7.22, CT8.13, CT8.65# (Option 1)

.ximum Stump Height (BT6.412): 12	**UNITED STATES OF AMERICA**
Purchaser's Operations Fire Suppression Liability (BT7.41) is: *$300,000.00* per Fire.	*By (Signature)*
Fire Precautionary Period (BT7.2): From: *April 01* To: *October 31*	Contracting Officer
Responsibility to Furnish Crews & Equipment (BT7.3): Initial Suppression: *5* road miles	*(Title)*
Fire Suppression Reinforcement: *100* road miles	**PURCHASER**
Normal Operating Season (BT6.31): First Period: From: *May 01* To: *November 30* Second Period: From: To:	
Performance Bond Amount (BT9.1):	*By (Signature)*
Downpayment Amount (BT4.211):	
Periodic Payment Amount (BT4.213): Date:	
WITNESSES	
In witness hereof, the parties hereto have executed this contract as of the award date.	*(Title)*
(Witness Signature)	
(Witness Signature)	

CERTIFICATION

I, _____, certify that I am the _____ Secretary of the corporation named as Purchaser herein; that _____ who signed this contract on behalf of the Purchaser, was then _____ of said corporation; that said contract was duly signed for and on behalf of said corporation by authority of its governing body, and is within the scope of its corporate powers.

_____

CORPORATE SEAL

TIMBER SALE CONTRACT

BT1.0-SALE AREA

BT1.1 Sale Area Map. The boundaries of "Sale Area" and any Payment Unit thereof, are as shown on the attached "Sale Area Map" that is made a part hereof, and were, before timber sale advertisement, designated on the ground by Forest Service to meet the anticipated needs of the parties. The location of Sale Area and its approximate acreage are stated on Page 1. Payment Units may be revised and additional ones may be established only by written agreement. Upon Purchaser's request, Forest Service shall subdivide Payment Units to reduce them to a size that can be logged within 60 days at Purchaser's normal rate of logging. However, the rate of logging used in such adjustment of Payment Unit size shall not be less than a rate necessary for removal of all Included Timber during Normal Operating Seasons prior to Termination Date. Payment Units may be eliminated from Sale Area under conditions described in BT6.36.

Where applicable, the following are also identified on Sale Area Map:

(a) Identified claims limiting Purchaser's rights under BT1.2;
(b) Boundaries of Clearcutting Units, Overstory Removal Units, and Understory Removal Units under BT2.3;
(c) Diameter limits for Overstory Removal Units and Understory Removal Units under BT2.33 and BT2.34;
(d) Areas where leave trees are Marked to be left uncut under BT2.35;
(e) Roads where log hauling or use is prohibited or restricted under BT5.12;
(f) Roads and trails to be kept open under BT6.22;
(g) Improvements to be protected under BT6.22;
(h) Locations of known wildlife, plant habitat, and cave resources to be protected under BT6.24;
(i) Locations of areas known to be infested with specific invasive species of concern under BT6.35;
(j) Maximum stump heights when lower stump heights are required for special areas under BT6.412;
(k) Skidding or yarding methods specified under BT6.42;
(l) Streamcourses to be protected under BT6.5;
(m) Locations of meadows requiring protection under BT6.61;
(n) Locations of wetlands requiring protection under BT6.62;
(o) Locations of temporary roads to be kept open under BT6.631; and
(p) Other features required by standard or special provisions.

BT1.2 Claims. Valid claims are excluded from Sale Area, except those on which timber cutting is authorized in writing by the claimant and except mining claims on which cutting is authorized by the Act of July 23, 1955 (30 USC 614). Claims that limit Purchaser's rights to operate under this contract and that Forest Service has been able to identify are shown on Sale Area Map. Purchaser is not obligated to operate contrary to existing claim limitations. Forest Service shall designate boundaries of claims on the ground to the extent necessary to identify Included Timber.

BT2.0-TIMBER SPECIFICATIONS

BT2.1 Included Timber. "Included Timber" consists of:

BT2.11 Standard Timber. Live and dead trees and portions thereof that meet Utilization Standards under BT2.2 and are designated for cutting under BT2.3.

BT2.12 Substandard Timber. Live and dead trees that:

(a) Do not meet Utilization Standards and
(b) Are located in Clearcutting Units or are otherwise designated for cutting.

BT2.13 Damaged Timber.

BT2.131 Damaged by Purchaser. Undesignated live trees meeting Utilization Standards that are damaged by Purchaser in logging and are subsequently Marked before Purchaser has completed skidding or yarding operations in the immediate area.

By agreement, such trees may be left without charge if their removal would cause undue damage or be grossly uneconomic.

BT2.132 Negligent or Willful Damage. Undesignated timber meeting Utilization Standards and unnecessarily damaged or negligently or willfully cut by Purchaser, if included by Contracting Officer.

BT2.134 Minor Damage by Natural Causes. Undesignated trees within Sale Area and meeting Utilization Standards, in amounts less than specified in BT8.22, that become insect infested, windthrown, suffer serious damage, or [illegible], as designated by agreement.

BT2.14 Unintentionally Cut Timber. Trees, within or immediately adjacent to Sale Area, not designated for cutting under BT2.3 but that are cut through mistake by Purchaser, when included by Contracting Officer.

BT2.16 Other Material. Species or products not listed on Page 1, upon written approval of Contracting Officer under

3.41.

BT2.2 Utilization and Removal of Included Timber. "Utilization Standards" for trees and minimum pieces are stated on Page 1. To meet minimum tree specifications, trees must equal or exceed tree diameters listed on Page 1 and contain at least one minimum piece. Except for timber required or authorized to be left, Purchaser shall fell and buck such trees and shall remove from Sale Area all pieces that:

(a) Meet minimum piece standards on Page 1 or

(b) Do not meet such standards, but would have qualified as part of minimum pieces if bucking lengths were varied to include such material.

BT2.3 Timber Designations. Timber designated for cutting shall be confined to Sale Area, except as provided in BT2.131, BT2.14, BT2.32, and BT5.1.

The boundaries of Clearcutting Units, Overstory Removal Units, and Understory Removal Units were plainly Marked on ground before timber sale advertisement and are shown on Sale Area Map. Boundary trees shall not be cut. The approximate acreage of timber designations is stated on Page 1.

BT2.31 Clearcutting Units. All trees that meet Utilization Standards within "Clearcutting Units" are designated for cutting.

BT2.32 Clearing. All timber is designated for cutting that is within the clearing limits of authorized clearings. All dead or unstable live trees are designated for cutting that are sufficiently tall to reach Purchaser's landings or the roadbed of roads when Marked in advance of felling of timber in the immediate vicinity. Pieces meeting Utilization Standards from such dead or unstable live trees shall be removed, unless there is agreement that to do so could damage the road.

BT2.322 Authorized Clearings. Timber within authorized clearings for roads, landings, or other clearings is designated for cutting.

BT2.33 Overstory Removal Units. All trees within "Overstory Removal Units" are designated for cutting when they meet Utilization Standards and equal or exceed the diameter limits shown on Sale Area Map.

BT2.34 Understory Removal Units. All trees within "Understory Removal Units" are designated for cutting when they meet Utilization Standards and are smaller than the diameter limits shown on Sale Area Map.

BT2.35 Individual Trees. All trees to be cut, other than in the units described in BT2.31, BT2.32, BT2.33, and 2.34, are Marked or designated by description. Trees are "Marked" when individually designated by Forest Service with paint marks above and below stump height.

Sale Area Map indicates areas plainly identified on the ground where leave trees are Marked to be left uncut.

BT2.37 Designation Changes. Within Sale Area, minor adjustments may be made in boundaries of cutting units or in the timber individually Marked for cutting when acceptable to Purchaser and Forest Service.

BT2.4 Quantity Estimate. The estimated quantities of timber by species designated for cutting under BT2.3 and expected to be cut under Utilization Standards are listed on Page 1. Estimated quantity on Page 1 does not include the following:

(a) Damaged timber under BT2.13;

(b) Unintentionally cut timber under BT2.14;

(c) Timber within clearing limits of roads or other authorized clearings and that is not designated under BT2.31, BT2.33, BT2.34, or BT2.35; or

(d) Dead or unstable live trees that are sufficiently tall to reach Purchaser's landings or roads under BT2.32.

Estimated quantities for such timber not included on Page 1 shall be determined as stated in CT6.8.

BT2.43 Adjustment for Quantity Errors. An estimated quantity shown on Page 1 shall be revised by correcting identified errors made in determining estimated quantity that result in a change in total timber sale quantity of at least 10 percent or $1,000 in value, whichever is less, when an incorrect estimated quantity is caused by computer malfunction or an error in calculations, area determination, or computer input.

No adjustments in quantity shall be made for variations in accuracy resulting from planned sampling and Measuring methods or judgments of timber quality or defect.

For payment purposes, corresponding revisions in quantity and total payment shall be shown on Page 1 for each Payment Unit involved. Adjustment in rates will not be made. Adjustment in quantities shall not obligate Forest Service to designate additional quantities when the original quantity estimate is overstated.

BT3.0-RATES OF PAYMENT

BT3.1 Current Contract Rates. Included Timber that is Released for Cutting shall be paid for at Current Contract Rates ermined under this Section. "Current Contract Rates" are listed on Page 1, unless superseded by rates redetermined under BT3.3. In addition, "Required Deposits" shall be made as listed on Page 1 and CT5.32, or established under BT3.3.

In the event Termination Date is adjusted under BT8.21, Current Contract Rates shall be continued in the same manner as immediately prior to the adjustment period.

Current Contract Rates, based on rates redetermined under BT3.3, shall apply to all Payment Units from which removal of timber from Sale Area has not been completed on the effective date of the revised rates, except Current Contract Rates in effect at the time of Release for Cutting shall be applicable for not more than two other Payment Units from which removal from Sale Area has begun.

Notwithstanding the exceptions provided in this Section, rates redetermined under BT3.31 and BT3.33 shall apply to all Included Timber removed subsequent to the rate redetermination.

In event there are more than two Payment Units from which timber removal has not been completed on the effective date, the rates in effect at the time of Release for Cutting shall apply to the two units from which the greatest estimated proportions of Payment Unit quantities have been removed. Otherwise, in released Payment Units, redetermined rates shall apply to the entire quantity shown on Page 1 for those units. In addition, Required Deposits shall be made as listed on Page 1 and CT5.32, or established under BT3.3.

"Current Contract Value" is the sum of the products of Current Contract Rates and estimated remaining quantities by species of Included Timber meeting Utilization Standards. "Bid Premium Rates" are the amounts by which Purchaser's bid is in excess of Advertised Rates. "Advertised Rates" are the minimum acceptable Bid Rates for timber. "Bid Rates" are the rates bid by Purchaser. "Base Rates" are the lowest rates of payment for timber that are authorized by this contract.

BT3.3 Rate Redetermination. Rates may be redetermined as set forth in this Section. Bid Premium Rates shall be added to all redetermined rates, except as provided in BT3.31 and BT3.33.

Rate redeterminations shall be made in accordance with the standard Forest Service methods in effect 45 days prior to rate redetermination. Such methods shall take into consideration factors that may affect timber value at said rate redetermination date.

Redetermined rates shall not be less than Base Rates listed on Page 1, except for reduction under BT3.31 or BT3.33. Required Deposits shall be redetermined.

BT3.31 Rate Redetermination for Environmental Modification. In the event of a contract modification under BT8.33 partial termination under BT8.34, Contracting Officer shall make an appraisal to determine for each species the fference between the appraised unit value of Included Timber remaining immediately prior to the revision and the appraised unit value of Included Timber to be cut under the modification.

Current Contract Rates in effect at the time of the revision will be adjusted by said differences to become the redetermined rates. Accordingly, Base Rates shall be adjusted to correspond to the redetermined rates if redetermined rates are less than the original Base Rates, subject to a new Base Rate limitation of the cost of essential reforestation or 25 cents per hundred cubic feet or equivalent, whichever is larger.

Redetermined rates and Required Deposits shall be considered established under BT3.1 for timber removed subsequent to the contract revision.

BT3.33 Rate Redetermination for Market Change. In the event of delay or interruption, exceeding 90 days, under BT8.33, Contracting Officer shall make an appraisal to determine for each species the difference between the appraised unit value of Included Timber immediately prior to the delay or interruption and the appraised unit value of Included Timber immediately after the delay or interruption. The appraisal shall be done after any rate redetermination done pursuant to BT3.31, using remaining volumes.

Current Contract Rates in effect at the time of delay or interruption or established pursuant to BT3.31 will be reduced, if appraised rates declined during the delay or interruption. Increases in rates will not be considered. Accordingly, Base Rates shall be adjusted to correspond to the redetermined rates if redetermined rates are less than the original Base Rates, subject to a new Base Rate limitation of the cost of essential reforestation or 25 cents per hundred cubic feet or equivalent, whichever is larger.

Redetermined rates shall be considered established under BT3.1 for timber removed subsequent to the delay or interruption.

BT3.4 Other Payment Rates.

BT3.41 Material and Quantities Not on Page 1. Incidental amounts of products or portions of trees of species listed on Page 1 that do not meet Utilization Standards may be removed without charge. Such material may be purposely removed in more than incidental amounts without charge upon written approval of Contracting Officer, and subject to agreement on deposits if needed for road maintenance and use.

Other species or products not listed on Page 1 may be cut and removed upon written approval of Contracting Officer d subject to agreement on rates of payment and deposits if needed for road maintenance and use. When any material suitable for use in a product form included on Page 1 is removed in another product form, the rates of payment shall be not

s than but approximately equivalent to Current Contract Rates and Required Deposits.

BT3.42 Timber Cut Through Mistake. Undesignated timber meeting Utilization Standards, cut by Purchaser through mistake and included by Contracting Officer under BT2.14, shall be removed and paid for at Current Contract Rates and Required Deposits, unless such material is not listed on Page 1. In such event, Contracting Officer, in accord with standard Forest Service methods, shall establish rates to be paid.

BT3.43 Undesignated Timber Damaged Without Negligence. Undesignated timber meeting Utilization Standards, damaged without negligence by Purchaser and designated by Forest Service under BT2.131, shall be cut, removed, and paid for at Current Contract Rates and Required Deposits.

BT3.44 Undesignated Timber Unnecessarily Damaged or Negligently or Willfully Cut. Undesignated timber meeting Utilization Standards and unnecessarily damaged or negligently or willfully cut by Purchaser, if included by Contracting Officer under BT2.132, shall be cut, removed, and paid for at Current Contract Rates and Required Deposits that are in addition to liquidated damages under BT3.45.

If such timber is of a species or size not listed on Page 1 or is of a quality different from designated timber, Contracting Officer shall establish payment rates in accord with standard Forest Service methods.

BT3.45 Liquidated Damages. Unnecessary damage to or negligent or willful cutting of undesignated timber, as described in BT3.44, on portions of Sale Area cut over under this contract is likely to cause substantial silvicultural or other damage to the National Forest. It will be difficult, if not impossible, to determine the amount of such damage. Therefore, Purchaser shall pay as fixed, agreed, and liquidated damages an amount equivalent to the amount payable at Current Contract Rates. If designated by Contracting Officer, Purchaser shall remove such damaged or cut timber and pay for it at Current Contract Rates.

BT4.0-PAYMENTS

BT4.1 Amount Payable for Timber. Except as provided in BT3.1, Current Contract Rates and Required Deposits in effect when a Payment Unit is Released for Cutting shall be applied to the timber quantities to determine the amount Purchaser shall pay. A "Payment Unit" is a portion of Sale Area established for payment purposes.

BT4.2 Timber Sale Account. The "Timber Sale Account" is an account maintained by Forest Service of all Purchaser's osits, credits, payment guarantees, and the charges for:

(a) Timber at Current Contract Rates,
(b) Slash disposal and road maintenance at Required Deposit rates,
(c) Cooperative work at rates established by specific agreement under BT4.218, and
(d) Other charges provided in this contract.

Cash deposits shall be recorded currently in such account.

Charges for Payment Units Released for Cutting shall be made when Forest Service prepares and furnishes to Purchaser periodic statements of quantity and value of such timber.

Charges shall be made according to BT3.4 when trees are subsequently Marked or designated for cutting.

BT4.21 Cash Deposits. Within the limitations of this Subsection, Purchaser shall make cash deposits to meet Purchaser's obligations within 15 days of billing by Forest Service. Deposits shall be made to the address on Page 1. Forest Service shall explain the bill at the time it requests each deposit.

BT4.211 Downpayment. The downpayment amount shown on Page 1 may not be applied toward any other payment required under the provisions of this contract, except damages determined pursuant to BT9.4, transferred to other timber sales, or refunded until stumpage value representing 25 percent of the total bid value of the timber sale is shown on the Timber Sale Account to have been cut, removed, and paid for, or if 36 CFR 223.49(e) is applicable, the estimated value remaining to be cut and removed, as shown on the Timber Sale Account, is equal to or less than the amount of the downpayment. For lump sum timber sales, the downpayment may be applied to payment for release of the single payment unit.

If Forest Service makes a determination that this contract should not have been included under increased downpayment requirements (36 CFR 223.49(e)), the downpayment shall be revised and applied in accordance with 36 CFR 223.49(f).

BT4.212 Advance Deposits. Purchaser agrees to make cash deposits in advance of cutting to meet charges under BT4.2.

Forest Service billings for advance cash deposits shall be in such amounts that the Timber Sale Account will maintain an unobligated balance that covers the applicable charges for Payment Units Released for Cutting and designated material included on Page 1 expected to be cut within the next 60 days. This advance cash deposit may be reduced to a smaller ount by the terms of BT4.211, BT4.213, and/or BT4.215. Except for amounts required pursuant to BT4.211, and BT4.213, Purchaser shall not be required to make advance deposits above those required under this Item.

When the credit balance in the Timber Sale Account is exceeded by the charges for timber within Payment Units Released for Cutting and for the estimated quantity to be cut in 10 days of cutting designated material not included on Page 1, Contracting Officer will suspend all or any part of Purchaser's Operations until payment or acceptable payment guarantee is received.

BT4.213 Periodic Payment Schedule. Purchaser shall make periodic payment for stumpage value, as shown on Page 1.

In the event Purchaser has not paid the amount stated on Page 1 as stumpage for volume removed by the periodic payment determination date, Forest Service shall issue a bill for collection for the difference between the required amount and payments made by Purchaser. If payment falls due on a date other than a normal billing date, the payment date shall be extended to coincide with the next Timber Sale Account billing date.

The amount of the periodic payment will be reduced if the payment would result in Purchaser's credit balance for timber charges exceeding the Current Contract Value.

Only cash may be used for this purpose. No other form of payment is acceptable. Forest Service will apply the payment to subsequent charges on this contract under the terms of BT4.212.

A periodic payment determination date that has not been reached shall be adjusted one day for each additional day of time granted.

BT4.215 Deposits When Payment Guaranteed. To the extent payment guarantee is provided under BT4.3, requirements for advance cash deposits under BT4.212 shall be waived for the value of timber on Sale Area that has been Released for Cutting, but not removed, and for the estimated value of products removed from Sale Area for not more than a monthly billing period, subject to the provisions of BT4.4.

BT4.216 Blanket Cash Deposits. Purchaser may make cash deposits under a written agreement to cover charges made under this and other timber sale contracts within the same National Forest. Forest Service shall allocate such deposits to such timber sales. When there is to be no timber cutting hereunder for 30 days or more and payment of current charges has been made, the allocation to this timber sale shall be reallocated to other timber sales within the same National Forest at Purchaser's request. Purchaser shall not start cutting until allocation has again been made to this timber sale.

BT4.218 Cooperative Deposits. On a basis of cooperation or assistance (16 USC 572) and by a written agreement, Forest Service shall perform all or portions of the work that Purchaser is obligated to perform under this contract, as well as furnish other services in connection with activities under this contract. When Forest Service is to perform such work, Purchaser shall make one or more deposits to cover the estimated cost of said work. On request of Purchaser, Forest Service shall render monthly accounts, as may be specified in such agreement.

BT4.22 Temporary Reduction of Downpayment. When, under BT8.33, Contracting Officer orders a delay or interruption of Purchaser's Operations for more than 30 days when scheduled operations would be occurring but for the order, the downpayment amount required shall be temporarily reduced upon the written request of Purchaser or at the discretion of the Contracting Officer. For the period of the delay or interruption, the downpayment on deposit may be reduced to $1,000 or two (2) percent of the downpayment amount listed on Page 1, whichever is larger.

Any downpayment amount temporarily reduced pursuant to this Subsection may be refunded or transferred at the request of Purchaser. However, if Purchaser has outstanding debt owed to the United States, Contracting Officer must apply the amount of downpayment that could be refunded to the debt owed in accordance with the Debt Collection Improvement Act, as amended (31 USC 3701, et seq.).

Upon Purchaser's receipt of bill for collection and written notice from Contracting Officer that the basis for the delay or interruption no longer exists, Purchaser shall restore the downpayment to the full amount shown on Page 1 within 15 days after the date the bill for collection is issued, subject to the provisions of BT4.4. Purchaser shall not resume contract operations until the downpayment amount is fully restored.

BT4.23 Refund of Excess Cash. If at any time the credit balance of the Timber Sale Account exceeds the charges for timber within Payment Units Released for Cutting and for designated material not included on Page 1 that Forest Service estimates will be cut within the next 60 days, any portion of such excess that is due to cash in the account shall be refunded, if requested by Purchaser, unless deposited under BT4.211 or BT4.213. If Purchaser plans no cutting within the next 60 days, Forest Service may refund the entire unencumbered cash balance, except as provided in this Subsection. However, Forest Service shall not reduce the credit balance below the total value of partially cut Payment Units and designated material not included on Page 1 that is cut before operations cease. After a refund for a shutdown, deposits shall be made to meet the requirements of BT4.212 before additional timber may be cut.

BT4.24 Refund after Final Charges for Released Timber. Any cash deposit, in excess of that required to meet charges under BT4.2, shall be refunded or transferred within 15 days of Purchaser's request after final charges for Included Timber have been made, except for amounts estimated to be required under BT9.5.

BT4.3 Payment Guaranteed by Bond or Deposited Securities. To guarantee payment, Purchaser may furnish and maintain an acceptable surety bond or deposit in a Federal Depository negotiable securities of the United States. The securities shall be deposited through the Regional Fiscal Agent accompanied by a power of attorney and agreement authorizing the bond-approving officer to sell or collect such securities if payment is not made within 15 days of billing by Forest Service. The penal sum of such surety bond or the market value at time of deposit of such negotiable securities shall be the maximum amount of the payment guaranteed.

For payment purposes, said penal sum of the surety bond or market value at time of deposit of negotiable securities shall be in lieu of the performance bond furnished under BT9.1.

BT4.31 Blanket Bond. If Purchaser furnishes an acceptable bond, or deposits securities, in accordance with BT4.3, to guarantee payment for timber from this and other timber sales within the same National Forest, the amount of such bond or deposited securities shall be allocated to such timber sales by Forest Service. When there is to be no timber cutting hereunder for 30 days or more and payment of current charges has been made, the allocation to this timber sale shall be reallocated to other timber sales at Purchaser's request. Purchaser shall not start cutting hereunder until this timber sale receives an allocation that will meet the obligation for payment guarantee.

BT4.32 Letters of Credit for Payment Bond. Notwithstanding the provisions of BT4.3, Purchaser may use letters of credit in lieu of a surety bond for payment bond purposes when approved by Contracting Officer.

BT4.4 Payments Not Received. (a) Payments are due and payable on the date of issue indicated on the bill for collection. When a payment for timber cut and other charges is not received at the location designated by Forest Service by the date allowed in the bill for collection for receipt of payment Contracting Officer will suspend all or any part of Purchaser's Operations until payment or acceptable payment guarantee is received. Other charges include, but are not limited to:

(i) Slash disposal and road maintenance deposits,
(ii) Cooperative work at rates established by specific agreement under BT4.218,
(iii) Damages pursuant to BT9.4,
(iv) Road use fees,
(v) Restoration of downpayment pursuant to BT4.22,
(vi) Periodic payment pursuant to BT4.213, and
(vii) Other mandatory deposits.

(b) Failure to pay amounts due by the date allowed in the bill for collection for receipt of payment shall be considered a breach under BT9.3. The 30-day notice period prescribed therein shall begin to run as of the end of business on the date allowed for receipt of payments. If the performance or payment is guaranteed by surety bond, the surety will receive a copy of the written notification of breach. Demand will be made on the surety or other institution providing the guarantee or bond instrument for immediate payment 10 days after issuance of written notification of the breach,

(c) Pursuant to the Debt Collection Improvement Act of 1996, as amended, if payment is not received by Forest Service within 15 days after the date of issue indicated on the bill for collection:

(i) Simple interest shall be assessed at the higher of the Current Value of Funds Rate or the Prompt Payment Interest Rate as established by the Secretary of the Treasury. Interest will begin to accrue as of the date of issue indicated on the initial bill for collection.

(ii) Debtors will be assessed administrative charges, in addition to the delinquent amount due. Administrative charges are those additional costs incurred by the Government in processing, handling, and collecting delinquent debts.

(iii) A penalty charge of six (6) percent per annum will be assessed on any portion of a debt delinquent more than 90 days. This penalty charge is in addition to interest and administrative charges under paragraphs (c)(i) and (c)(ii). The penalty charge shall accrue from the date of issue indicated on the bill for collection, and shall be assessed on all outstanding amounts, including interest and administrative costs assessed under paragraphs (c)(i) and (c)(ii).

(iv) Payments will be credited on the date received by the Federal Depository or Collection Officer designated on the bill for collection.

(d) Forest Service remedies for Purchaser's failure to make payment for timber cut and other charges when due, except for accrual of interest, suspension of all or any part of Purchaser's Operations, and administrative offset, shall be stayed for so long as:

(i) A bona fide dispute exists as to Purchaser's obligation to make such payment and
(ii) Purchaser files and prosecutes a timely Claim.

5.0-TRANSPORTATION FACILITIES

BT5.1 Authorization. Purchaser is authorized to construct and maintain roads, bridges, and other transportation

ilities, as needed for harvesting Included Timber on National Forest lands.

Maintenance shall be governed by BT5.3. The location and clearing widths of all roads or facilities shall be agreed to before construction is started.

BT5.11 Requirements of Rights-of-Way. Purchaser's use on rights-of-way identified in attached list or CT5.11 shall be confined to rights-of-way and limited by the related easements and stipulations, if any, unless Purchaser makes other arrangements that will not infringe upon or adversely affect the grantee's rights. Easements or right-of-way documents are available in the offices of the Forest Supervisor and District Ranger.

BT5.12 Use of Roads by Purchaser. Except as provided herein, Purchaser is authorized to use existing National Forest system roads, when Forest Service determines that such use will not cause damage to the roads or National Forest resources.

CT5.12 lists existing roads shown on Sale Area Map that for such reasons as limitations in structural capacity, safety, and protection of soil, water, and roads:

(a) Cannot be used for log hauling or
(b) May be used only under the restrictive limitations stated therein.

BT5.3 Road Maintenance. Purchaser shall maintain roads, commensurate with Purchaser's use, in accordance with Road Maintenance Requirements in CT5.31 and the Road Maintenance Specifications. Performance of road maintenance work by Purchaser may be required prior to, during, or after each period of use. The timing of work accomplishment shall be based on Purchaser's Operating Schedule under BT6.31.

When two or more commercial users are simultaneously using the same road where Forest Service is not requiring maintenance deposits, the commercial users will develop maintenance responsibilities and arrangements for accomplishing the work. Forest Service must agree to this plan. If the commercial users cannot agree on maintenance responsibilities, Forest Service shall resolve the differences.

If Purchaser elects to use different roads than those listed in CT5.31, Forest Service shall determine Purchaser's commensurate share of road maintenance and revise road maintenance deposits in CT5.32.

If Forest Service cannot perform its full commensurate share of road maintenance, Forest Service shall make a cash ment to Purchaser for performance of such work.

Unless agreed in writing, prehaul maintenance shall be completed on any portion of road prior to hauling on that portion. Maintenance, as used in this contract, does not include road reconstruction or repairs of an extraordinary nature.

BT6.0-OPERATIONS

BT6.1 Representatives. Unless otherwise agreed, Purchaser shall designate, in writing, a representative who is authorized to receive notices in regard to performance under this contract and take related action. In no case shall Purchaser designate any representative to this contract who is currently debarred, proposed for debarment, or suspended by the Federal Government. Purchaser's representative shall provide a copy of the contract to Purchaser's field supervisor and persons authorized to assume responsibilities in the field supervisor's absence. Prior to initial operations and after shutdowns of 10 days or more, Purchaser's representative shall notify Forest Service 2 days, excluding weekends and Federal holidays, before any operations begin on Sale Area.

Purchaser's representative shall designate, in writing, a field supervisor, one of whose responsibilities shall be on-the-ground direction and supervision of Purchaser's Operations. The field supervisor shall be readily available to the area of operations when operations are in progress and shall be authorized to receive notices in regard to performance under this contract and take related action. The responsibilities of the field supervisor shall include the safeguarding of National Forest resources and performance within the terms of the contract. Purchaser representative will furnish Forest Service with names of persons authorized to assume responsibilities in field supervisor's absence. Such delegations may be made a part of Purchaser's annual Operating Schedule under BT6.31.

Unless Contracting Officer designates another Forest Service representative and notifies Purchaser in writing, the District Ranger is the representative of Forest Service. Forest Service representative shall:

(a) Receive notice in regard to performance under this contract,
(b) Take action in relation to this contract, and
(c) Be readily available to the area of logging operations.

Contracting Officer or Forest Service representative shall designate other on-the-ground representatives in writing along with their specific contractual responsibilities and authority. Representatives with authority delegated in writing are only Forest Service personnel authorized to provide notice or take related actions under the contract. Such delegation ll be made within 60 days of contract award.

BT6.11 Notices. Notices by either party as to action taken or to be taken by the other respecting this contract shall be

ade in writing to the other party's designated representative.

BT6.2 Improvements. Purchaser shall comply with the rules and regulations governing the operation of premises that are occupied and shall perform the contract in a manner that will not interrupt or interfere with the conduct of Forest Service business.

Forest Service shall grant written permission before any camp, storage, or service area is opened or operated on National Forest land or administered land. A camp is interpreted to include the campsite or trailer parking area of any employee, agent, contractor, Subcontractor or their employees or agents working on the project for Purchaser. Such permission, if granted, shall be without charge to Purchaser.

BT6.22 Protection of Improvements. So far as practicable, Purchaser shall protect improvements (such as roads, trails, telephone lines, ditches, and fences):

(a) Existing in the operating area,
(b) Determined to have a continuing need or use, and
(c) Designated on Sale Area Map.

Purchaser shall keep roads and trails needed for fire protection or other purposes and designated on Sale Area Map reasonably free of equipment and forest products, and debris resulting from Purchaser's Operations. Purchaser shall make timely restoration of any such improvements damaged by Purchaser's Operations and, when necessary because of such operations, shall move such improvements, as specified in CT6.22.

BT6.221 Protection of Improvements Not Owned by Forest Service. Forest Service will notify all utility companies, or other parties affected, and make arrangements for all necessary adjustments of the public utility fixtures, pipelines, and other appurtenances likely to be affected by Purchaser's Operations.

When Purchaser's Operations are adjacent to properties of railway, telephone, or power companies, or other property, work shall not begin until Purchaser has identified actions necessary to prevent damage.

Purchaser shall cooperate with the owners of any underground or overhead utility lines in their removal and/or rearrangement operations in order that these operations may progress in a reasonable manner, utility duplication or rearrangement work may be reduced to a minimum, and services shall not be unnecessarily interrupted.

In the event of interruption to utility services because of accidental breakage or as a result of lines being exposed or unsupported, Purchaser shall promptly notify the proper authority and shall cooperate with that authority in the restoration of service until the service is restored.

When materials are to be hauled across the tracks of any railway, Forest Service will make arrangements with the railroad for the use of any existing crossing or for any new crossing required. Purchaser shall make arrangements for use of alternate crossings. All work to be performed by Purchaser on the railroad right-of-way shall not damage railroad company's property.

BT6.222 Protection of Property. Purchaser shall not unnecessarily remove, deface, injure, or destroy trees, shrubs, or other natural features, unless specifically authorized. To the extent practicable, Purchaser shall confine operations to within the clearing limit or other areas designated in the contract and prevent the depositing of rocks, excavated materials, stumps, or other debris outside these limits.

Material that falls outside these limits shall be retrieved, disposed of, or incorporated in the work to the extent practicable and necessary to protect adjacent resource values, unless otherwise agreed.

BT6.23 Protection of Land Survey Monuments. Forest Service shall appropriately designate on the ground all known survey monuments, section corners, and other corner accessories. Forest Service shall post identifying signs on two sides of each known bearing tree.

Forest Service shall arrange protective or perpetuate action that does not cause unnecessary delay to Purchaser in authorized clearings, such as Clearcutting Units, and in other instances where damage to monuments, section corners, and other corner accessories is unavoidable.

Purchaser shall protect all known survey monuments, witness corners, reference monuments, and bearing trees against avoidable destruction, obliteration, or damage during Purchaser's Operations. If any known monuments, corners, or accessories are destroyed, obliterated, or damaged by Purchaser's Operations, Purchaser shall hire the appropriate county surveyor or a registered land surveyor to reestablish or restore at the same location the monuments, corners, or accessories. Such surveyors shall use procedures in accordance with the Bureau of Land Management "Manual of Instructions for the Survey of the Public Lands of the United States" for General Land Office surveys and in accordance with State law for others. Purchaser shall record such survey in appropriate county records.

BT6.24 Protection Measures Needed for Plants, Animals, Cultural Resources, and Cave Resources.

(a) Areas, known by Forest Service prior to timber sale advertisement, needing special measures for the protection of plants, animals, cultural resources, and/or cave resources are shown on Sale Area Map and/or identified on the ground, and

.ll be treated as follows:

(i) Unless agreed otherwise, wheeled or track laying equipment shall not be operated in areas identified as needing special measures except on roads, landings, tractor roads, or skid trails approved under BT5.1 or BT6.422. Purchaser may be required to backblade skid trails and other ground disturbed by Purchaser's Operations within such areas in lieu of cross ditching required under BT6.6. Additional special protection measures needed to protect such known areas are identified in CT6.24.

(ii) Unless agreed otherwise, trees will not be felled into areas identified as needing special measures.

(iii) Purchaser shall conduct operations in a manner that does not damage or disturb identified areas. In the event that protective measures identified by the Forest Service are for any reason inadequate, Contracting Officer may delay or interrupt Purchaser's operations, under this Contract, and/or modify this Contract pursuant to BT8.33.

(iv) Purchaser shall immediately notify the Forest Service if its operations disturb or damage any area identified as needing special protection, and shall immediately halt its operations in the vicinity of such area until the Forest Service authorizes continued operations. In the event that Purchaser's operations disturb or damage an area identified as needing special protection, then Purchaser shall reimburse the Forest Service for the full cost and expense of any evaluative and remedial measures undertaken by the Forest Service in connection with such disturbance or damage. Such payment shall not relieve Purchaser from civil or criminal liability under applicable law.

(b) Nothing contained in this Subsection shall establish, or be deemed to establish any express or implied warranty on the part of the Forest Service (i) that the Forest Service has identified all areas within the Sale Area requiring special protection, or (ii) that measures prescribed by the Forest Service for protection of such areas are adequate.

(c) Following sale advertisement, additional areas needing special measures for protection may be discovered or identified; protective measures may be revised or newly prescribed; and, additional species of plants and/or animals may be added to federal lists of protected species. In such event, Contracting Officer may delay or interrupt Purchaser's operations, under this Contract, and/or modify this Contract pursuant to BT8.33.

(d) Discovery, by either the Purchaser or the Forest Service, of additional areas, resources, species, or members of species needing special protection shall be promptly reported to the other party.

BT6.3 Control of Operations. Under this contract, "Purchaser's Operations" shall include activities of or use of .ipment of Purchaser, Purchaser's employees, agents, contractors, Subcontractors, or their employees or agents, acting in ıne course of their employment in operations hereunder on National Forest lands or within Forest Service protection boundary (unless acting under the immediate supervision of Forest Service).

Purchaser's Operations shall be conducted in a workmanlike and orderly manner. The timing of required Forest Service designation of work on the ground and the performance of other Forest Service work shall not be such as to cause unnecessary delay to Purchaser.

"Release for Cutting" is written authorization to Purchaser to begin cutting in a Payment Unit. Upon Purchaser's request for release of a Payment Unit, Forest Service shall either:

(a) Give tentative approval and bill Purchaser as necessary under BT4.21 or

(b) Reject the request, stating reasons for rejection.

When payment or payment guarantee has been confirmed, Forest Service shall issue Release for Cutting within 10 days. Purchaser shall not cut timber in any Payment Unit until it is Released for Cutting.

BT6.31 Operating Schedule. Purchaser shall, before commencing operations, provide in writing an annual Operating Schedule of anticipated major activities and needs for logging Included Timber, such as logging and road maintenance. Upon reasonable notice to Forest Service, such schedule shall be subject to modifications necessitated by weather, markets, or other unpredictable circumstances.

Subject to BT6.6 and when the requirements of BT6.66 are met, Purchaser's Operations may be conducted outside Normal Operating Season. "Normal Operating Season" is the period(s) beginning and ending on the dates stated on Page 1 of any year.

BT6.32 Protection of Residual Trees. Purchaser's Operations shall not unnecessarily damage young growth or other trees to be reserved.

BT6.33 Safety. Purchaser's Operations shall facilitate Forest Service's safe and practical inspection of Purchaser's Operations and conduct of other official duties on Sale Area. Purchaser has all responsibility for compliance with safety requirements for Purchaser's employees.

In the event that Contracting Officer identifies a conflict between the requirements of this contract or agreed upon thods of proceeding hereunder and State or Federal safety requirements, the contract shall be modified and Purchaser .y request an adjustment in Current Contract Rates to compensate for the changed conditions.

Unless otherwise agreed in writing, when Purchaser's Operations are in progress adjacent to or on Forest Service

ntrolled roads and trails open to public travel, Purchaser shall furnish, install, and maintain all temporary traffic controls that provide the user with adequate warning of hazardous or potentially hazardous conditions associated with Purchaser's Operations. Purchaser and Forest Service shall agree to a specific Traffic Control Plan for each individual project prior to commencing operations. Devices shall be appropriate to current conditions and shall be covered or removed when not needed. Except as otherwise agreed, flagmen and devices shall be as specified in the "Manual on Uniform Traffic Control Devices for Streets and Highways" (MUTCD) and as shown on Sale Area Map, Traffic Control Plan, or in specifications attached hereto.

BT6.34 Sanitation and Servicing. Purchaser shall take all reasonable precautions to prevent pollution of air, soil, and water by Purchaser's Operations. If facilities for employees are established on Sale Area, they shall be operated in a sanitary manner. In the event that Purchaser's Operations or servicing of equipment result in pollution to soil or water, Purchaser shall conduct cleanup and restoration of the polluted site to the satisfaction of Forest Service.

Purchaser shall maintain all equipment operating on Sale Area in good repair and free of abnormal leakage of lubricants, fuel, coolants, and hydraulic fluid. Purchaser shall not service tractors, trucks, or other equipment on National Forest lands where servicing is likely to result in pollution to soil or water. Purchaser shall furnish oil-absorbing mats for use under all stationary equipment or equipment being serviced to prevent leaking or spilled petroleum-based products from contaminating soil and water resources. Purchaser shall remove from National Forest lands all contaminated soil, vegetation, debris, vehicle oil filters (drained of free-flowing oil), batteries, oily rags, and waste oil resulting from use, servicing, repair, or abandonment of equipment.

BT6.341 Prevention of Oil Spills. If Purchaser maintains storage facilities for oil or oil products on Sale Area, Purchaser shall take appropriate preventive measures to ensure that any spill of such oil or oil products does not enter any stream or other waters of the United States or any of the individual States.

If the total oil or oil products storage exceeds 1,320 gallons in containers of 55 gallons or greater, Purchaser shall prepare a Spill Prevention Control and Countermeasures Plan. Such Plan shall meet applicable EPA requirements (40 CFR 112), including certification by a registered professional engineer.

Purchaser shall notify Contracting Officer and appropriate agencies of all reportable (40 CFR 110) spills of oil or oil oducts on or in the vicinity of Sale Area that are caused by Purchaser's employees, agents, contractors, Subcontractors, their employees or agents directly or indirectly, as a result of Purchaser's Operations. Purchaser will take whatever initial action may be safely accomplished to contain all spills.

BT6.342 Hazardous Substances. Purchaser shall notify the National Response Center and Contracting Officer of all releases of reportable quantities of hazardous substances on or in the vicinity of Sale Area that are caused by Purchaser's employees, agents, contractors, Subcontractors, or their employees or agents directly or indirectly, as a result of Purchaser's Operations, in accordance with 40 CFR 302.

BT6.35 Equipment Cleaning. (a) Areas, known by Forest Service prior to timber sale advertisement, that are infested with invasive species of concern are shown on Sale Area Map. A current list of invasive species of concern and a map showing the extent of known infestations is available at the Forest Supervisor's Office. For purposes of this provision, "Off Road Equipment" includes all logging and construction machinery, except for log trucks, chip vans, service vehicles, water trucks, pickup trucks, cars, and similar vehicles.

(b) Purchaser shall adhere to the following requirements with regard to cleaning "Off-Road Equipment":

(i) Prior to moving Off Road Equipment onto the Sale Area, Purchaser shall identify the location of the equipment's most recent operation. Purchaser shall not move any Off Road Equipment that last operated in an area infested with one or more invasive species of concern onto Sale Area without having cleaned such equipment of seeds, soil, vegetative matter, and other debris that could contain or hold seeds, and having notified Forest Service, as provided in (iii). If the location of prior operation cannot be identified, then Purchaser shall assume that the location is infested with invasive species of concern.

(ii) Prior to moving Off Road Equipment from a cutting unit that is shown on Sale Area Map to be infested with invasive species of concern to, or through any other area that is shown as being free of invasive species of concern, or infested with a different invasive species, Purchaser shall clean such equipment of seeds, soil, vegetative matter, and other debris that could contain or hold seeds, and shall notify the Forest Service, as provided in (iii).

(iii) Prior to moving any Off-Road Equipment subject to the cleaning requirements set forth above, Purchaser shall advise Forest Service of its cleaning measures and make the equipment available for inspection. Forest Service shall have 2 days, excluding weekends and Federal holidays, to inspect equipment after it has been made available. After satisfactory spection or after such 2 day period, Purchaser may move the equipment as planned. Equipment shall be considered clean hen a visual inspection does not disclose seeds, soil, vegetative matter, and other debris that could contain or hold seeds. Purchaser shall not be required to disassemble equipment unless so directed by the Forest Service after inspection.

(iv) If Purchaser desires to clean Off Road Equipment on National Forest land, such as at the end of a project or prior to moving to, or through an area that is free of invasive species of concern, Purchaser shall obtain prior approval from Contracting Officer as to the location for such cleaning and measures, if any, for controlling impacts.

(v) Contracting Officer may order delay, interruption, or modification of this Contract pursuant to BT8.33.

(c) Nothing contained in this Section shall be interpreted as creating any warranty on the part of the Forest Service that all locations of invasive species of concern have been described herein, elsewhere in this Contract, or designated on the ground. Following sale advertisement, additional locations may be described or designated, and other species may be added to the list of invasive species of concern. In such event, Contracting Officer may order delay, interruption, or modification of this Contract pursuant to BT8.33.

(d) The parties shall promptly communicate with one another with respect to description or designation of additional locations; discovery of locations of new species or new infestation; and, addition of species to the list of invasive species of concern.

BT6.36 Acceptance of Work. Upon Purchaser's written request and assurance that work has been completed, Forest Service shall perform an inspection within 5 days, excluding weekends and Federal holidays, so as not to delay unnecessarily the progress of Purchaser's Operations. Such a request may be for acceptance of:

(a) Specific requirements on a Payment Unit (such as logging, slash disposal, erosion control, or snag felling) or

(b) All contract requirements on a Payment Unit.

Forest Service may perform such inspections without request from Purchaser.

Within 2 days of inspection, excluding weekends and Federal holidays, Forest Service shall furnish Purchaser with written notice either of acceptance or of work remaining to be done.

In the event that Forest Service is unable to make such inspection within 5 days of Purchaser's request, Purchaser shall be notified in writing of necessity for postponement and time when inspection can be made.

When all contractual work of Purchaser has been accepted for any Payment Unit or cutting unit identified on Sale Area Map, said Payment Unit or cutting unit shall be eliminated from Sale Area on written notice of either party to this contract.

BT6.4 Conduct of Logging. Unless otherwise specifically provided herein, Purchaser shall fell trees designated for cutting and shall remove the portions that meet Utilization Standards, as provided in BT2.2, prior to acceptance of Payment Unit for completion of logging under BT6.36. Forest Service may make exceptions for occasional trees inadvertently not cut or trees or pieces not removed for good reason, including possible damage to forest resources or gross economic impracticability at the time of removal of other timber. Logging shall be conducted in accordance with the following, unless CT6.4 provisions set forth requirements to meet special or unusual logging conditions:

BT6.41 Felling and Bucking. Felling shall be done to minimize breakage of Included Timber and damage to residual timber. Unless agreed otherwise, felling shall be done by saws or shears. Bucking shall be done to permit removal of all minimum pieces set forth on Page 1. Purchaser may buck out cull material when necessary to produce pieces meeting Utilization Standards. Such bucked out material shall contain a minimum amount of sound wood, not in excess of the net Measure in percentage of gross Measure, or based on the merchantability factor, whichever is stated on Page 1. If necessary to assess extent of defect, Purchaser shall make sample saw cuts or wedges.

BT6.411 Felling in Clearings. Insofar as ground conditions, tree lean, and shape of clearings permit, trees shall be felled so that their tops do not extend outside Clearcutting Units, clearings, and areas of regeneration cutting.

BT6.412 Stump Heights. Stumps shall not exceed, on the side adjacent to the highest ground, the maximum height set forth on Page 1, except that occasional stumps of greater heights are acceptable when Purchaser determines that they are necessary for safe and efficient conduct of logging. Unless otherwise agreed Purchaser shall re-cut high stumps so they will not exceed height specified on Page 1 and shall dispose of severed portions in the same manner as other logging debris or as otherwise agreed. The stump heights shown on Page 1 were selected with the objective of maximum reasonable utilization of the timber, unless Sale Area Map shows special areas where stump heights are lower for aesthetic, land treatment, or silvicultural reasons.

BT6.413 Limbing. When Forest Service determines it is necessary to minimize damage to the residual stand during skidding, Purchaser shall cut exposed limbs from products prior to skidding. Purchaser may be leave uncut those limbs that cannot be cut with reasonable safety.

BT6.42 Skidding and Yarding. Methods of skidding or yarding specified for particular areas, if any, are indicated on Sale Area Map. Outside Clearcutting Units and clearings, insofar as ground conditions permit, products shall not be skidded against reserve trees or groups of reproduction and tractors shall be equipped with a winch to facilitate skidding.

BT6.421 Rigging. Insofar as practicable, needed rigging shall be slung on stumps or trees designated for cutting.

BT6.422 Landings and Skid Trails. Location of all landings, tractor roads, and skid trails shall be agreed upon prior to their construction. The cleared or excavated size of landings shall not exceed that needed for efficient skidding and

ding operations.

BT6.423 Skidding on Roads. Products may be skidded on permanent roads authorized for hauling under BT5.12 only by prior written agreement.

BT6.424 Arches and Dozer Blades. Unless otherwise specified in CT6.424, skidding tractors equipped with pull-type arches or dozer blades wider than tractor width or C-frame width, whichever is greater, shall not be used in residual timber outside Clearcutting Units and other authorized clearings, except on constructed tractor roads or landings, unless there is written agreement that residual timber will not be damaged materially by such use.

BT6.5 Streamcourse Protection. "Streamcourses" that are subject to provisions of this Section are shown on Sale Area Map. Unless otherwise agreed, the following measures shall be observed to protect Streamcourses:

(a) Purchaser's Operations shall be conducted to prevent debris from entering Streamcourses, except as may be authorized under paragraph (d). In event Purchaser causes debris to enter Streamcourses in amounts that may adversely affect the natural flow of the stream, water quality, or fishery resource, Purchaser shall remove such debris as soon as practicable, but not to exceed 2 days, and in an agreed manner that will cause the least disturbance to Streamcourses.

(b) Culverts or bridges shall be required on roads at all points where it is necessary to cross Streamcourses. Such facilities shall be of sufficient size and design and installed in a manner to provide unobstructed flow of water and to minimize damage to Streamcourses. Trees or products shall not be otherwise hauled or yarded across Streamcourses unless fully suspended.

(c) Wheeled or track-laying equipment shall not be operated in Streamcourses, except at crossings designated by Forest Service or as essential to construction or removal of culverts and bridges.

(d) Flow in Streamcourses may be temporarily diverted only if Forest Service gives written authorization. Such flow shall be restored to the natural course as soon as practicable and, in any event, prior to a major storm runoff period or runoff season.

BT6.6 Erosion Prevention and Control. Purchaser's Operations shall be conducted reasonably to minimize soil erosion. Equipment shall not be operated when ground conditions are such that excessive damage will result. Purchaser shall adjust the kinds and intensity of erosion control work done to ground and weather conditions and the need for controlling runoff.

osion control work shall be kept current immediately preceding expected seasonal periods of precipitation or runoff.

If Purchaser fails to do seasonal erosion control work prior to any seasonal period of precipitation or runoff, Forest Service may temporarily assume responsibility for the work and any unencumbered deposits hereunder may be used by Forest Service to do the work. If needed for such work, Purchaser shall make additional deposits on request by Forest Service. Any money deposited or used for this purpose shall be treated as cooperative deposits under BT4.218.

BT6.61 Meadow Protection. Reasonable care shall be taken to avoid damage to the cover, soil, and water in meadows shown on Sale Area Map. Vehicular or skidding equipment shall not be used on meadows, except where roads, landings, and tractor roads are approved under BT5.1 or BT6.422. Unless otherwise agreed, trees felled into meadows shall be removed by endlining. Resulting logging slash shall be removed where necessary to protect cover, soil, and water.

BT6.62 Wetlands Protection. Wetlands requiring protection under Executive Order 11990 are shown on Sale Area Map. Vehicular or skidding equipment shall not be used in such wetlands, except where roads, landings, and tractor roads are approved under BT5.1 or BT6.422. Additional measures needed to protect such areas are provided in CT6.62.

BT6.63 Temporary Roads. As necessary to attain stabilization of roadbed and fill slopes of temporary roads, Purchaser shall employ such measures as outsloping, drainage dips, and water-spreading ditches.

After a temporary road has served Purchaser's purpose, Purchaser shall give notice to Forest Service and shall remove bridges and culverts, eliminate ditches, outslope roadbed, remove ruts and berms, effectively block the road to normal vehicular traffic where feasible under existing terrain conditions, and build cross ditches and water bars, as staked or otherwise marked on the ground by Forest Service. When bridges and culverts are removed, associated fills shall also be removed to the extent necessary to permit normal maximum flow of water.

BT6.631 Temporary Roads to Remain Open. To maintain short term access to portions of Sale Area for post-sale treatments and other purposes after a temporary road has served Purchaser's purpose, pursuant to BT6.63, Purchaser agrees, that on temporary roads designated on Sale Area Map as "Remain Open," to construct cross ditches and water bars, as designated, staked, or otherwise directed by Forest Service, that can be traversed by a normal two-wheeled drive pickup truck. On "Remain Open" roads, all bridges and culverts shall remain in place and ditches shall not be eliminated. All drainage structures shall be left in functional condition.

BT6.64 Landings. After landings have served Purchaser's purpose, Purchaser shall ditch and slope them to permit ater to drain or spread. Unless agreed otherwise, cut and fill banks around landings shall be sloped to remove overhangs d otherwise minimize erosion.

BT6.65 Skid Trails and Fire Lines. Purchaser shall construct cross ditches and water-spreading ditches on tractor

.ds and skid trails, where staked or otherwise marked on the ground by Forest Service. Forest Service shall designate cross ditching on Purchaser-built fire lines prior to or during construction. By agreement, Purchaser may use other comparable erosion control measures, such as backblading skid trails, in lieu of cross ditching.

BT6.66 Current Operating Areas. Where logging is in progress but not completed, unless agreed otherwise, Purchaser shall, before operations cease annually, remove all temporary log culverts and construct temporary cross drains, drainage ditches, dips, berms, culverts, or other facilities needed to control erosion.

Such protection shall be provided, prior to end of a Normal Operating Season, for all disturbed, unprotected ground that is not to be disturbed further prior to end of operations each year, including roads and associated fills, tractor roads, skid trails, and fire lines. When weather permits operations after Normal Operating Season, Purchaser shall keep such work on any additional disturbed areas as up to date as practicable.

BT6.67 Erosion Control Structure Maintenance. During the period of this contract, Purchaser shall provide maintenance of soil erosion control structures constructed by Purchaser until they become stabilized, but not for more than 1 year after their construction. Contracting Officer may agree to perform such structure maintenance under BT4.218, if requested by Purchaser, subject to agreement on rates. Purchaser shall not be responsible for repair of such structures damaged by other National Forest users whose activities are not a part of Purchaser's Operations.

BT6.7 Slash Disposal. Purchaser's timing of product removal and preparatory work shall not unnecessarily delay slash disposal. Specific slash disposal measures to be employed by Purchaser are stated in CT6.7 and are in addition to Required Deposits for slash disposal.

BT6.8 Measuring. "Measuring" is the estimation of timber quantities using certain dimensions and applicable volume tables or formulae to determine the contents of trees or stands in a standard manner. Sampling may be on an individual tree or area basis. Examples of standard procedures are tree measurement, sample tree measurement, and area estimate. The quantity of timber designated or to be designated for cutting has been or shall be Measured, as specified in CT6.8.

BT6.81 Product Identification. For timber sales west of the 100th meridian, before removal from Sale Area, unless Contracting Officer determines that circumstances warrant a written waiver or adjustment, Purchaser shall:

(a) Hammer brand all products that are eight (8) feet or more in length and one-third (1/3) or more sound, on each d that is seven (7) inches or more in diameter.

(b) Paint with a spot of highway-yellow paint all domestic processing products that are eight (8) feet or more in ıength and one-third (1/3) or more sound, on each end that is seven (7) inches or more in diameter. Each paint spot must be not less than three (3) square inches in size.

Contracting Officer shall assign brands and, if Sale Area is within a State that maintains a log brand register, brands shall be registered with the State. Purchaser shall use assigned brand exclusively on logs from this sale until Contracting Officer releases brand. Purchaser will furnish and apply highway-yellow paint of a lasting quality (oil-base or equivalent).

All hammer brands and/or highway-yellow paint must remain on logs until they are domestically processed. Purchaser shall replace identifying marks if they are lost, removed, or become unreadable. Purchaser may remanufacture products into different log lengths. Except for logs remanufactured as part of the mill in-feed process immediately before processing, remanufactured products must be rebranded with the assigned timber sale brand and repainted with highway-yellow paint, unless otherwise agreed to in writing by Contracting Officer. For such remanufactured products, Contracting Officer may approve use of a brand to be used exclusively as a catch brand, in lieu of the assigned timber sale brand.

BT6.9 Records. Upon request, Purchaser shall provide access to appropriate annual records in Purchaser's books and accounts to enable Forest Service to obtain and analyze accurate operating costs and selling price data for appropriate use in appraising Federal timber. Operating cost and selling price data shall include that applicable for appraising timber obtained from Federal sources in or processed in the Region. Purchaser shall provide access to such data on behalf of subsidiary entities owned or controlled by Purchaser to the extent they participate in harvesting, manufacturing, or marketing said timber into products recognized in National Forest timber appraisals in the area. To a like extent, Purchaser shall request in writing Purchaser's contractors and Subcontractors to make such data available to Forest Service.

Information so obtained shall be treated as confidential, as provided in regulations issued by the Secretary of Agriculture (7 CFR 1.12), and shall be available for review by parties from whom such data are obtained.

BT7.0-FIRE PRECAUTIONS AND CONTROL

BT7.1 Plans. Prior to initiating Purchaser's Operations during Fire Precautionary Period, Purchaser shall file with Forest Service a Fire Prevention and Control Plan providing for the prevention and control of fires on Sale Area. Such Plan shall clude a detailed list of personnel and equipment at Purchaser's disposal for implementing the Plan. This requirement may e met by preparing a single Plan for more than one timber sale.

BT7.2 Fire Precautions. Specific fire precautionary measures listed in CT7.2 shall be applicable during Purchaser's

erations in "Fire Precautionary Period" described on Page 1. Contracting Officer may change the dates of Fire Precautionary Period by advance written notice, if justified by unusual weather or other conditions. Required tools and equipment shall be kept in serviceable condition and immediately available for fire fighting at all times during Purchaser's Operations in Fire Precautionary Period.

BT7.21 Substitute Precautions. Forest Service may authorize substitute measures or equipment, or waive specific requirements by written notice, if substitute measures or equipment will afford equal protection or some of the required measures and equipment are unnecessary.

BT7.22 Emergency Precautions. Forest Service may require the necessary shutting down of equipment on portions of Purchaser's Operations, as specified by the emergency fire precautions schedule of CT7.22. Under such conditions, after Purchaser ceases active operations, Purchaser shall release for hire by Forest Service, if needed, Purchaser's shutdown equipment for fire standby on Sale Area and personnel for fire standby or fire patrol, when such personnel and equipment are not needed by Purchaser for other fire fighting or protection from fire. Equipment shall be paid for at fire fighting equipment rates common in the area or at prior agreed rates and, if Purchaser requests, shall be operated only by personnel approved by Purchaser. Personnel so hired shall be subject to direction and control by Forest Service and shall be paid by Forest Service at fire fighting rates common in the area or at prior agreed rates.

BT7.3 Fire Control. Purchaser shall, both independently and in cooperation with Forest Service, take all reasonable and practicable action to prevent and suppress fires resulting from Purchaser's Operations and to suppress any forest fire on Sale Area. Purchaser's independent initial fire suppression action on such fires shall be immediate and shall include the use of all necessary personnel and equipment at Purchaser's disposal on Sale Area or within the distance of Sale Area stated on Page 1.

BT7.31 Purchaser's Reinforcement Obligations. Whenever an Operations Fire or Negligent Fire, whether on or off Sale Area, or any other forest fire on Sale Area, has not been suppressed by initial action and appreciable reinforcement strength is required, Forest Service may require further actions by Purchaser until such fire is controlled and mopped up to a point of safety. Such actions may include any or all of the following as necessary to fight such fire:

BT7.311 Suspend Operations. To suspend any or all of Purchaser's Operations.

BT7.312 Personnel. To release for employment by Forest Service any or all of Purchaser's personnel engaged in Purchaser's Operations or timber processing within the distance of Sale Area stated on Page 1. Any organized crew so hired shall include Purchaser's supervisor, if any. Personnel so employed shall be paid at Forest Service standard emergency fire fighting rates.

BT7.313 Equipment. To make available for Forest Service rental at fire fighting equipment rates common in the area or at prior agreed rates any or all of Purchaser's equipment suitable for fire fighting and currently engaged in Purchaser's Operations within the distance of Sale Area stated on Page 1. Equipment shall be operated only by personnel approved by Purchaser, if so requested by Purchaser.

BT7.4 Fire Suppression Costs. Purchaser's obligations for cost of fire suppression vary according to three classifications of fires as follows:

BT7.41 Operations Fire. An "Operations Fire" is a fire caused by Purchaser's Operations other than a Negligent Fire. Forest Service, except as provided in BT7.3, shall use cooperative deposits under BT4.218 to perform fire suppression activities on Operations Fires. Purchaser agrees to reimburse Forest Service for such cost for each Operations Fire, subject to a maximum of the dollar amount stated on Page 1. The cost of Purchaser's actions, supplies, and equipment on any such fire provided pursuant to BT7.3, or otherwise at the request of Forest Service, shall be credited toward such maximum. If Purchaser's actual cost exceeds Purchaser's obligation stated on Page 1, Forest Service shall reimburse Purchaser for the excess.

BT7.42 Negligent Fire. A "Negligent Fire" is a fire caused by negligence or fault of Purchaser's Operations, including, but not limited to, one caused by smoking by persons engaged in Purchaser's Operations during the course of their employment, or during rest or lunch periods; or if Purchaser's failure to comply with the requirements of BT7.2 and BT7.3 results in a fire starting or permits a fire to spread. Damages and the cost of suppressing Negligent Fires shall be borne by Purchaser.

BT7.43 Other Fires on Sale Area. Forest Service shall pay Purchaser, at fire fighting rates common in the area or at prior agreed rates, for equipment or personnel furnished by Purchaser pursuant to BT7.3, or otherwise at the request of Forest Service, on any fire on Sale Area other than an Operations Fire or a Negligent Fire.

BT7.5 State Law. Purchaser shall not be relieved by the terms of this contract of any liability to the United States for fire suppression costs recoverable in an action based on State law, except for such costs resulting from Operations Fires.

ıounts due Purchaser for fire fighting expenditures in accordance with BT7.41 shall not be withheld pending settlement of any such claim or action based on State law.

BT7.6 Performance by Contractor. Where Purchaser's employees, agents, contractors, Subcontractors, or their employees or agents perform Purchaser's Operations in connection with fire responsibilities, Purchaser's obligations shall be the same as if performance was by Purchaser.

BT8.0-OTHER CONDITIONS

BT8.1 Title and Liability.

BT8.11 Title Passage. All right, title, and interest in and to any Included Timber shall remain in Forest Service until it has been Measured, removed from Sale Area, and paid for, at which time title shall vest in Purchaser. For purposes of this Subsection, timber in Payment Units Released for Cutting covered by cash deposit or payment guarantee under BT4.3 shall be considered to have been paid for. Title to any Included Timber that has been Measured and paid for, but not removed from Sale Area by Purchaser on or prior to Termination Date, shall remain in Forest Service.

BT8.12 Liability for Loss. If Included Timber is destroyed or damaged by an unexpected event that significantly changes the nature of Included Timber, such as fire, wind, flood, insects, disease, or similar cause, the party holding title shall bear the timber value loss resulting from such destruction or damage; except that such losses caused by insect or disease after felling of timber shall be borne by Purchaser, unless Purchaser is prevented from removing such timber for reasons that would qualify for Contract Term Adjustment. Deterioration or loss of value of salvage timber is not an unexpected event, except for deterioration due to delay or interruption that qualifies for Contract Term Adjustment or under BT8.33.

In the event Included Timber to which Forest Service holds title is destroyed, Purchaser will not be obligated to remove and pay for such timber. In the event Included Timber to which Forest Service holds title is damaged, Contracting Officer shall make an appraisal to determine for each species the difference between the appraised unit value of Included Timber immediately prior to the value loss and the appraised unit value of timber after the loss. Current Contract Rates in effect at the time of the value loss shall be adjusted by differences to become the redetermined rates.

There shall be no obligation for Forest Service to supply, or for Purchaser to accept and pay for, other timber in lieu of ıt destroyed or damaged. This Subsection shall not be construed to relieve either party of liability for negligence.

BT8.2 Period of Contract. All obligations of Purchaser shall be discharged not later than "Termination Date" stated on Page 1, unless it is adjusted pursuant to BT8.21, excepting only those obligations for which Forest Service has given written permission to delay performance. Such written permission shall be considered a Contract Term Adjustment for the purpose of Purchaser completing performance of obligations covered by such permission.

BT8.21 Contract Term Adjustment. "Contract Term Adjustment" means adjustment only as provided for in the three circumstances described in this Subsection. Under said circumstances, the contract term shall be adjusted in writing to include additional calendar days in one or more Normal Operating Seasons equal to the actual time lost, except as limited by paragraph (b) in this Subsection.

To qualify for such adjustment, Purchaser shall give written notice of the lost time not later than 30 days after end of Normal Operating Season in which time was lost and at least 10 days before Termination Date. Contracting Officer shall make prompt written acknowledgment of such notice, indicating concurrence with the number of days in the notice or the number of days Forest Service considers as qualifying for the adjustment. Lost portions of days shall be disregarded in computing time lost. The three circumstances qualifying for a Contract Term Adjustment are:

(a) Purchaser experiences delay in starting scheduled operations or interruptions in active operations, either of which stops removal of Included Timber from Sale Area through curtailment in felling and bucking, yarding, skidding and loading, or hauling, as scheduled under BT6.31, for 10 or more consecutive days during a Normal Operating Season due to causes beyond Purchaser's control, including, but not limited to, acts of God, acts of the public enemy, acts of Government, labor disputes, fires, insurrections, or floods.

(b) Causes described in paragraph (a) substantially affect the disposition or processing of Included Timber during Normal Operating Season through their effects on primary timber processing facilities, with a resulting delay of 60 days or more in use of such facilities. In such event, Contract Term Adjustment shall not extend for more than 12 consecutive months.

(c) (i) Contracting Officer requests Purchaser, in writing, to delay or interrupt operations during the normal perating season for any purpose other than suspension under BT4.4 or BT9.3 or

(ii) Purchaser suffers a delay or interruption of Purchaser's Operations affecting skidding, yarding, and loading

cause of fire emergency closure ordered by Forest Service (or another agency in its behalf), and the total of such lost time is 10 or more days during any Normal Operating Season.

BT8.22 Termination for Catastrophe. In event of Catastrophic Damage, this contract shall be terminated without liability to either party due to the termination. "Catastrophic Damage" is major change or damage to Included Timber on Sale Area, to Sale Area, to access to Sale Area, or a combination thereof:

(a) Caused by forces, or a combination of forces, beyond control of Purchaser, occurring within a 12-month period, including, but not limited to, wind, flood, earthquake, landslide, fire, forest pest epidemic, or other major natural phenomenon and

(b) Affecting the value of any trees or products meeting Utilization Standards, within Sale Area and estimated to total either:

(i) More than half of the estimated timber volume stated on Page 1 or

(ii) More than two hundred thousand cubic feet (2,000 CCF) or equivalent.

BT8.3 Contract Modification. The conditions of this timber sale are completely set forth in this contract. Except as provided in BT8.33, this contract can be modified only by written agreement between the parties. Only Contracting Officer may make contract modifications, with compensating adjustments to Current Contract Rates where appropriate, on behalf of Forest Service.

BT8.31 Changed Conditions. When it is agreed that the completion of certain work or other requirements hereunder would no longer serve the purpose intended because of substantial change in the physical conditions of Sale Area or Included Timber since the date of this contract, the requirements shall be waived in writing. The estimated cost of such waived work or other requirement shall be charged to the Timber Sale Account.

BT8.33 Contract Suspension and Modification. (a) Contracting Officer may, by written order, delay or interrupt authorized operations under this contract or, notwithstanding BT8.3, modify this contract, in whole or in part:

(i) To prevent environmental degradation or resource damage, including, but not limited to, harm to habitat, plants, animals, cultural resources, or cave resources;

(ii) To ensure consistency with land and resource management plans or other documents prepared pursuant to the tional Environmental Policy Act of 1969, 42 USC 4321 4347;

(iii) To conduct environmental analysis, including, but not limited to, engaging in consultation pursuant to the ndangered Species Act of 1973, 16 USC 1531, et seq.; or

(iv) Upon agreement of the Regional Forester, due to administrative appeal or litigation, regardless of whether Contracting Officer's order is required by a court order or this contract is named in such a proceeding.

(b) In the event of an order delaying or interrupting Purchaser's Operations under this Subsection, Purchaser's remedy shall be:

(i) Contract Term Adjustment,

(ii) reimbursement for Out of Pocket Expenses,

(iii) rate redetermination to measure any decline in the market,

(iv) temporary reduction of downpayment, and

(v) temporary bond reduction. However, the foregoing remedies shall be available only to the extent that the Contracting Officer's order was the sole and exclusive cause of the delay or interruption of Purchaser's operations.

(c) In cases of modification under this Subsection, Purchaser shall only receive a rate redetermination pursuant to BT3.31. However, if there is an order delaying or suspending operations in addition to a modification, then Purchaser shall also be entitled to the remedies provided under BT8.33(b) for such delay or suspension.

(d) Remedies awarded to the Purchaser shall not be duplicative, and Contracting Officer shall have the right to structure remedies provided herein to avoid duplicative compensation.

(e) Purchaser agrees that this Subsection, and the remedies provided herein shall apply regardless of any finding by any court or administrative body that the Forest Service failed to comply with any statute, regulation and/or policy in connection with awarding, advertising, or authorizing this sale, or a similar sale. However, nothing in this Subsection precludes Purchaser from exercising rights under the Contract Disputes Act.

BT8.34 Contract Termination This contract may be terminated, in whole or in part, by Forest Service or Purchaser, as provided in Items BT8.341 and BT8.342, respectively. In the event of any such termination, Purchaser shall be entitled to the applicable remedies, subject to the limitation upon duplicative compensation set forth in BT8.33(d). Purchaser agrees that this Subsection and the remedies contained in the following Items shall apply regardless of any finding by any rt or administrative body that the Forest Service failed to comply with any statute, regulation and/or policy in nection with awarding, advertising, or authorizing this sale, or a similar sale. However, nothing in this Subsection precludes Purchaser from exercising rights under the Contract Disputes Act.

BT8.341 Termination by Forest Service. (a) The Chief or the Chief's designee may unilaterally terminate this contract, in whole or in part, for any of the reasons set forth in paragraph (a) of BT8.33.

(b) Purchaser's compensation for termination of this contract under this Item shall be:

(i) refund or release of advanced deposits for timber cut but not removed,

(ii) reimbursement for Out-of-Pocket Expenses, and

(iii) replacement timber under subparagraph (c), and/or liquidated damages under subparagraph (d); provided that liquidated damages shall be available if, and only if, after good faith efforts, the Parties (1) cannot locate replacement timber or agree upon the applicable stumpage price, or (2) the volume of deleted timber exceeds the volume of any replacement timber.

(c) Subject to applicable laws, regulations and policies, Forest Service and Purchaser shall make good faith efforts to identify replacement timber of similar volume, quality, access, and topography within Sale Area. If suitable replacement timber cannot be located within Sale Area, the parties shall expand the search to the National Forest in which the Sale Area is located. Stumpage price shall be adjusted under BT3.31 to account for differences between replacement timber and deleted timber. If Forest Service and Purchaser agree upon suitable replacement timber and the applicable stumpage price, then this contract shall not terminate and instead shall be modified pursuant to 36 CFR 223.85(c) and shall remain in force with respect to such replacement timber and, in the case of partial termination, any remaining Included Timber. If the parties cannot agree on suitable replacement timber or the applicable stumpage price of such timber, either party may end the search and Purchaser shall be compensated under subparagraph (d).

(d) Forest Service shall pay as fixed, agreed, and liquidated damages an amount equivalent to 15 percent of the estimated delivered log value of the volume of timber not harvested due to the termination or partial termination. Estimated delivered log value and volume of timber not harvested shall be determined by the Contracting Officer as of Termination Date, using Forest Service methods in use as of the Termination Date.

(e) In any instance of partial termination, in which the Forest Service deletes one or more cutting units from the Sale Area, Purchaser's sole and exclusive remedy with regard to remaining units shall be a rate redetermination pursuant to BT3.31. Purchaser shall be required to complete Contract Operations with regard to remaining units and any obligations taining to cessation of operations on deleted units, including without limit erosion control, brush disposal, and road intenance. If Purchaser fails to fulfill any such duty or obligation, then Contracting Officer may make deductions from compensation due Purchaser, including without limit costs and expenses of completing such work.

BT8.342 Termination by Purchaser. (a) Purchaser may, by written notice, terminate this Contract, in whole or in part, as described herein,

(i) in the event of an order delaying or interrupting its operations pursuant to BT8.33, or

(ii) in the event of an order modifying this Contract pursuant to BT8.33, if Purchaser decides to reject the terms of the modification prior to its acceptance. Purchaser shall have the right to terminate this Contract in whole only when the Contracting Officer's order under BT8.33 applies to all cutting units within the Sale Area. When the order affects only a portion of the cutting units, Purchaser shall have the right to terminate this Contract in part, by deleting one or more of the units covered by the Contracting Officer's order. The foregoing right of termination, in whole or in part, shall not exist when the delay, interruption, or modification arises from wind, flood, landslide, fire, forest pest epidemic, or other major natural phenomenon.

(b) Purchaser's compensation for termination of this Contract, in whole or in part, under this Item shall be:

(i) refund or release of advanced deposits for timber cut but not removed,

(ii) reimbursement for Out of Pocket Expenses, and

(iii) if the duration of the delay or interruption exceeds either six months of Normal Operating Season time, or one calendar year from the date of the order, then: replacement timber as provided under (c) and/or liquidated damages under (d); provided that liquidated damages shall be available if, and only if, after good faith efforts, the Parties (1) cannot locate replacement timber or agree upon the applicable stumpage price, or (2) the volume of deleted timber exceeds the volume of any replacement timber.

(c) Subject to applicable laws, regulations and policies, Forest Service and Purchaser shall make good faith efforts to identify replacement timber of similar volume, quality, access, and topography within Sale Area. If suitable replacement timber cannot be located within Sale Area, the parties shall expand the search to the National Forest in which the Sale Area is located. Stumpage price shall be adjusted under BT3.31 to account for differences between replacement timber and deleted timber. If Forest Service and Purchaser agree upon suitable replacement timber and the applicable stumpage price, n this contract shall not terminate and instead shall be modified pursuant to 36 CFR 223.85(c) and shall remain in force h respect to such replacement timber and, in the case of partial termination, any remaining Included Timber. If the parties cannot agree on suitable replacement timber or the applicable stumpage price of such timber, either party may end

search and Purchaser shall be compensated under subparagraph (d).

(d) Forest Service shall pay as fixed, agreed, and liquidated damages an amount equivalent to 15 percent of the estimated delivered log value of the volume of timber not harvested due to the termination or partial termination. Estimated delivered log value and volume of timber not harvested shall be determined by the Contracting Officer as of Termination Date, using Forest Service methods in use as of the Termination Date.

(e) In any instance of partial termination, in which Purchaser deletes one or more cutting units from Sale Area, Purchaser's sole and exclusive remedy with regard to remaining units shall be a rate redetermination pursuant to BT3.31. Purchaser shall be required to complete Contract Operations with regard to remaining units and any obligations pertaining to cessation of operations on deleted units, including without limit, erosion control, brush disposal, and road maintenance. If Purchaser fails to fulfill any such duty or obligation, then Contracting Officer may make deductions from compensation due Purchaser, including without limit costs and expenses of completing such work.

BT8.35 Out-of-Pocket Expenses. "Out of Pocket Expenses" are unrecovered expenditures arising directly from performing the contract that were rendered unrecovered due to delay, interruption, or termination pursuant to BT8.33 or BT8.34. An expenditure is "Unrecovered" within the meaning of this Subsection when Purchaser did not gain the benefit of its expenditure because Contract operations were not permitted. In determining whether an expenditure is "Unrecovered," Contracting Officer shall not conclude that an award of liquidated damages constitutes the benefit of that expenditure. (a) Out of Pocket Expenses shall not include, in particular and without limitation, any of the following:

(i) attorneys fees;

(ii) costs and expenses of operating a saw mill or other processing facility;

(iii) expectancy damages; and,

(iv) anticipatory profits

(b) Forest Service shall reimburse Purchaser for only the following Out of Pocket Expenses:

(i) Out of Pocket Expenses for maintenance of the timber sale performance and payment bonds during the period when operations were delayed or interrupted or, if terminated, from the date operations were halted until the expiration of the bonds;

(ii) Out of Pocket Expenses for maintenance of the downpayment or other cash deposits during the period when rations were delayed or interrupted or, if terminated, from the date operations were halted until the cash is returned to Purchaser;

(iii) Out of Pocket Expenses for the lesser of move out and move in or leaving equipment and/or logging camps on site, if the Purchaser and Contracting Officer have agreed to leave equipment and/or logging camps on site in lieu of move out and move in;

(iv) Out of Pocket Expenses for felling, bucking, lopping, skidding, yarding, and decking any products so processed, but not removed from Sale Area because: (1) the sale was terminated, or (2) the products no longer meet Utilization Standards because of delay or interruption;

(v) If terminated, in whole or in part, Out of Pocket Expenses for unamortized Temporary Roads, road maintenance, dust abatement and improvements authorized under BT6.2, and

(vi) If terminated, in whole or in part, Out of Pocket Expenses for bid preparation, including review of sale offering.

(c) Purchaser shall submit documentation of claimed expenditures, including those actually paid and those for which the Purchaser has a legal obligation to pay but has not yet paid, and supporting analysis to Contracting Officer to assist in Contracting Officer's calculation of reimbursement. Contracting Officer shall determine the amount of reimbursement under this Subsection using information from Purchaser and/or Forest Service methods in use on the date that operations were delayed, interrupted, or terminated. Purchaser's failure to substantiate any claimed Out of Pocket Expense may constitute grounds for Contracting Officer's denial of reimbursement.

(d) Purchaser shall make reasonable efforts to minimize its Out of Pocket Expenses.

Purchaser shall make all reasonable efforts to minimize Out-of-Pocket Expenses.

BT8.36 Termination for Market Change. (a) In the event of delay or interruption under BT8.33, exceeding 90 days, and Contract has not been modified to include replacement timber, this contract may be terminated upon election and written notice by Purchaser, if (i) a rate redetermination for market change under BT3.33 shows that the appraised weighted average Indicated Advertised Rate of all Included Timber remaining immediately prior to the delay or interruption has been reduced through a market change by an amount equal to or more than the the weighted average Current Contract Rate, or (ii) the appraised value of the remaining timber is insufficient to cover the adjusted base rates as ermined under BT3.33.

(b) Prior to termination under this Subsection, Purchaser shall complete all obligations on areas not affected by the delay or interruption.

(c) Damages caused by termination of contract under this Subsection will be limited to Out-of-Pocket Expenses.

BT8.5 Sale of Other Materials. Forest Service reserves the right to sell from Sale Area during the period of this contract any materials or products not subject to its terms, but shall not permit removal, possession, or use thereof that will materially interfere with Purchaser's Operations. Purchaser shall not be obligated to do any work made necessary by the action of others.

BT8.6 Provisions Required by Statute.

BT8.61 Covenant against Contingent Fees. Purchaser warrants that no person or agency has been employed or retained to solicit or secure this contract upon an agreement or understanding for a commission, percentage, brokerage, or contingent fee, excepting bona fide employees or bona fide established commercial agencies maintained by Purchaser for the purpose of securing business. For breach or violation of this warranty, Forest Service shall have the right to annul this contract without liability or to require Purchaser to pay, in addition to the contract price or consideration, the full amount of such commission, percentage, brokerage, or contingent fee.

BT8.62 Officials Not to Benefit. No member of Congress or Resident Commissioner shall be admitted to any share or part of this contract or to any benefit that may arise therefrom, unless it is made with a corporation for its general benefit (18 USC 431, 433).

BT8.63 Nondiscrimination in Employment. If the total value of this contract is in excess of $10,000, Purchaser agrees during its performance as follows:

(a) Purchaser will not discriminate against any employee or applicant for employment because of race, color, religion, sex, or national origin. Purchaser will take affirmative action to ensure that applicants are employed, and that employees are treated during employment, without regard to their race, color, religion, sex, or national origin. Such action shall include, but not be limited to, the following: employment, upgrading, demotion, or transfer; recruitment or recruitment advertising; layoff or termination; rates of pay or other forms of compensation; and selection for training, including apprenticeship. Purchaser agrees to post in conspicuous places, available to employees and applicants for employment, notices to be provided by Forest Service setting forth the provisions of this Subsection.

(b) Purchaser will, in all solicitations or advertisements for employees placed by or on behalf of Purchaser, state that qualified applicants will receive consideration for employment without regard to race, color, religion, sex, or national origin.

(c) Purchaser will send to each labor union or representative of workers with which Purchaser has a collective bargaining agreement or other contract or understanding, a notice to be provided by Forest Service, advising the labor union or worker's representative of Purchaser's commitments under this Subsection, and shall post copies of the notice in conspicuous places available to employees and applicants for employment.

(d) Purchaser shall comply with all provisions of Executive Order No. 11246, as amended by Executive Order No. 11375 and Executive Order No. 12086, and the rules, regulations, and relevant orders of the Secretary of Labor.

(e) Purchaser will furnish all information and reports required by Executive Order No. 11246, as amended, and by the rules, regulations, and orders of the Secretary of Labor, or pursuant thereto, and will permit access to books, records, and accounts by Forest Service and the Secretary of Labor for purposes of investigation to ascertain compliance with such rules, regulations, and orders.

(f) In event of Purchaser's noncompliance with this Subsection or with any of such rules, regulations, or orders, this contract may be terminated or suspended, in whole or in part, and Purchaser may be declared ineligible for further Government contracts in accordance with procedures authorized in Executive Order No. 11246, as amended, and such other sanctions may be imposed and remedies invoked, as provided in Executive Order or by rule, regulation, or order of the Secretary of Labor, or as otherwise provided by law.

(g) Purchaser will include the provisions of paragraphs (a) through (f) in every subcontract or purchase order unless exempted by rules, regulations, or orders of the Secretary of Labor issued pursuant to Section 204 of Executive Order No. 11246, as amended, so that such provisions will be binding upon each Subcontractor or vendor. Purchaser will take such action with respect to any subcontract or purchase order as Forest Service may direct as a means of enforcing such provisions, including sanctions for noncompliance. Provided, however, that in the event Purchaser becomes involved in, or is threatened with, litigation with a Subcontractor or vendor as a result of such direction by Forest Service, Purchaser may request the United States to enter into such litigation to protect the interests of the United States.

BT8.64 Debarment and Suspension Certification. Pursuant to 7 CFR 3017, Purchaser shall obtain certifications from Subcontractors regarding debarment, suspension, ineligibility, and voluntary exclusion, including additional Subcontractors obtained after award of this contract. "Subcontractors" are participants in lower tier covered transactions. Purchaser may rely upon a certification of a prospective Subcontractor that it is not proposed for debarment under 48

R 9.4, debarred, suspended, ineligible, or voluntarily excluded from participating in covered transactions or timber sales, unless Purchaser knows that the certification is erroneous.

Purchaser shall keep the certifications of its Subcontractors on file until timber sale Termination Date and any adjustments thereof, and will provide a copy at the written request of Contracting Officer. Nothing contained in the foregoing shall be construed to require establishment of a system of records in order to render in good faith the certification required by this Subsection. The knowledge and information of Purchaser is not required to exceed that which is normally possessed by a prudent person in the ordinary course of business dealings.

If Purchaser knowingly enters into a timber sale transaction with a person who is proposed for debarment under 48 CFR 9.4, suspended, debarred, ineligible, or voluntarily excluded from participation in covered transactions or timber sales, in addition to other remedies available to the Government, Forest Service may pursue available remedies, including suspension and/or debarment.

The Subcontractor for a timber sale shall complete a "Subcontractor Certification Regarding Debarment, Suspension, Ineligibility, and Voluntary Exclusion."

BT8.65 Contract Consistency With Other Laws. The contract shall govern if State and local environmental quality laws conflict with or preclude performance of contractual requirements.

BT9.0-PERFORMANCE AND SETTLEMENT

BT9.1 Performance Bond. As a further guarantee of the faithful performance of the provisions of this contract, Purchaser delivers herewith and agrees to maintain a surety bond in the dollar amount stated on Page 1, unless the amount is adjusted as provided in BT9.11 or BT9.13. In lieu of surety bond, Purchaser may deposit into a Federal Depository, as directed by Forest Service under BT4.21, and maintain therein, cash in the dollar amount stated on Page 1 or negotiable securities of the United States having market value at time of deposit of not less than the dollar amount stated on Page 1.

Any adjustment of time for completion of this contract beyond 1 year may be granted only with the consent of surety on bond or delivery of a new bond. Should the sureties on the bond delivered herewith, or any bond delivered hereafter in connection with this contract, become unsatisfactory to Forest Service, Purchaser shall, within 30 days of receipt of nand, furnish a new bond with surety satisfactory to Forest Service.

BT9.11 Bond Reduction. Upon Purchaser's written request, Contracting Officer shall redetermine the amount of rurchaser's performance bond to an amount not less than Purchaser's remaining obligations, including the value of Included Timber remaining on Sale Area, plus the estimated cost of uncompleted work required of Purchaser and any unpaid billings due on the timber sale. Contracting Officer shall provide written notice of the redetermined amount to Purchaser and to Purchaser's surety. Similarly, Contracting Officer shall report to Purchaser in writing the amount of deposited cash or deposited securities required thereafter, if such deposits exist in lieu of a surety bond.

As soon as security for the performance of this contract or the settlement of Claims incident thereto is no longer necessary, appropriate notice shall be given to surety or deposits that may have been made in lieu of surety bond shall be returned to Purchaser, subject to the conditions in BT9.5.

BT9.12 Letters of Credit. Notwithstanding the provisions of BT9.1, approved letters of credit may be used in lieu of a surety bond for performance bond purposes. Such letters of credit shall be subject to approval by Contracting Officer.

BT9.13 Temporary Bond Reduction. When, under BT8.33, Contracting Officer orders a delay or interruption of Purchaser's Operations for more than 30 days when scheduled operations would be occurring but for the order, the performance bond amount required shall be temporarily reduced upon the written request of Purchaser or at the discretion of Contracting Officer. For the period of the delay or interruption, the performance bond may be reduced to an amount not less than the estimated cost of uncompleted work required of Purchaser and any unpaid billings due on the timber sale.

Upon Purchaser's receipt of written notice from Contracting Officer that the basis for the delay or interruption no longer exists, Purchaser shall restore the performance bond to the full amount shown on Page 1 within 15 days. Purchaser shall not resume contract operations until the performance bond amount is fully restored.

BT9.2 Disputes. This contract is subject to the Contract Disputes Act of 1978 (41 USC 601, et seq.). Except as provided in the Contract Disputes Act of 1978, all disputes arising under or relating to this contract shall be resolved in accordance with this Section.

As used herein, "Claim" means a written demand or assertion by one of the parties seeking, as a legal right, the payment of money, adjustment or interpretation of contract terms, or other relief, arising under or relating to this contract. A voucher, invoice, or request for payment that is not in dispute when submitted is not a Claim. However, where such mission is subsequently not acted upon in a reasonable time, or disputed either as to liability or amount, it may be iverted to a Claim. A Claim by Purchaser shall be made in writing and submitted to Contracting Officer for decision. A Claim by the Government against Purchaser shall be subject to a decision by Contracting Officer.

For Purchaser Claims of more than $100,000, Purchaser shall submit with the Claim a certification that the Claim is made in good faith; the supporting data are accurate and complete to the best of Purchaser's knowledge and belief; and the amount requested accurately reflects the contract adjustment for which Purchaser believes the Government is liable. Purchaser, if an individual, shall execute the certification. When Purchaser is not an individual, the certification shall be executed by a senior company official in charge at Purchaser's plant or location involved or by an officer or general partner of Purchaser having overall responsibility for the conduct of Purchaser's affairs.

For Purchaser Claims of $100,000 or less, Contracting Officer must render a decision within 60 days. For Purchaser Claims in excess of $100,000, Contracting Officer must decide the Claim within 60 days or notify Purchaser of the date when the decision will be made.

Contracting Officer's decision shall be final unless Purchaser appeals or files a suit.

The authority of Contracting Officer does not extend to Claims or disputes that by statute or regulation other agencies are expressly authorized to decide.

Interest, at the Prompt Payment Rate established by the Secretary of the Treasury, on the amount found due on Purchaser's Claim shall be paid from the date the Claim is received by Contracting Officer until the date of the payment.

Except as the parties may otherwise agree, pending final resolution of a Claim of Purchaser arising under the contract, Purchaser shall proceed diligently with the performance of the contract in accordance with Contracting Officer's decision.

BT9.21 Time Limits for Submission of Claim. Failure by Purchaser to submit a Claim within established time limits shall relinquish the United States from any and all obligations whatsoever arising under said contract or portions thereof. Purchaser shall file such Claim within the following time limits:

(a) For Payment Units or cutting units, Purchaser must file any Claim not later than 60 days after receipt of Forest Service written notification that Payment Unit has been accepted and

(b) In all other cases, Purchaser must file any Claim not later than 60 days after receipt of Contracting Officer written notification that timber sale is closed.

BT9.22 Contract Documents. All contract documents are intended to be consistent with each other. In case of discrepancy, the following is the order of precedence:

(a) Special Provisions (CT)
(b) Sale Area Map
(c) Specific Conditions on Page 1
(d) Standard Provisions (BT)
(e) Special project specifications
(f) Plans, such as slash, erosion control, dust abatement, etc.
(g) Agreements between Purchaser and Forest Service, as authorized under the contract
(h) Standard specifications

BT9.3 Breach. In event Purchaser breaches any of the material provisions of this contract, Forest Service shall give Purchaser notice of such breach and, allowing reasonable time for remedy of such breach and of Forest Service's election to suspend, may give notice to suspend all or any part of Purchaser's Operations. Such notice of breach and notice to suspend Purchaser's Operations shall be written, except oral notices may be given if such breach constitutes an immediate threat to human life or a threat of immediate and irreparable damage to National Forest resources. Notwithstanding Section BT6.1, such oral suspension notice may be given to Purchaser's work supervisor or, in work supervisor's absence, to those performing the operation. An oral suspension notice shall be promptly followed by telephone notice and a written explanation from Forest Service to Purchaser.

Suspension under this section shall not entitle Purchaser to any remedies arising under BT8.33.

Immediately upon oral or written suspension, Forest Service representative shall notify Contracting Officer of the suspension and related circumstances. Contracting Officer shall promptly review the suspension to determine if the suspension should be continued or lifted. Such suspension shall be lifted as early as conditions permit.

Upon receipt of oral or written notice of such breach, Purchaser shall remedy the breach as follows:

(a) If remedying such breach requires on-the-ground action by Purchaser, Purchaser shall have 30 practicable operating days during Normal Operating Season to remedy the breach, except under emergency conditions when action should not be delayed to prevent major damage or

(b) If such breach does not require on-the-ground action by Purchaser, such breach shall be remedied within 30 days.

BT9.31 Termination for Breach. Contracting Officer, with the concurrence of the Regional Forester, may terminate contract for breach in the event Purchaser:

(a) Is convicted for violation of criminal statutes, civil standards, or any other offense indicating a lack of business integrity or honesty that seriously and directly affects the responsibility of Purchaser; including, but not limited to:

(i) Theft, forgery, bribery, embezzlement, falsification or destruction of records, making false statements, or receiving stolen property, any of which occurred in connection with obtaining, attempting to obtain, selling, trading, or processing public timber;

(ii) Fraud, criminal offenses, or violation of Federal or State antitrust laws, any of which occurred in connection with obtaining, attempting to obtain, or performing a public contract or subcontract; or

(iii) Threatening, resisting, intimidating, or interfering with Forest Officers engaged in, or on account of, the performance of their official duties involving the protection, improvement, or administration of National Forest lands;

(b) Is convicted for a violation of criminal statutes or civil standards, orders, permits, or other regulations for environmental protection issued by a Federal agency, State agency, or political subdivision thereof in the conduct of operations hereunder on National Forest lands, pursuant to BT6.01;

(c) Has engaged in a pattern of activity that demonstrates flagrant disregard for the terms of this contract, such as, but not limited to, repeated suspensions for breach pursuant to BT9.3, causing undesignated timber meeting Utilization Standards to be unnecessarily damaged or negligently or willfully cut, or causing other serious environmental degradation or resource damage;

(d) Fails to comply with contract provisions related to nondiscrimination in employment; or

(e) Fails to remedy a breach of contract within time limits stated in BT9.3.

Damages due the United States for termination under this Subsection shall be determined pursuant to BT9.4.

BT9.4 Damages for Failure to Cut or Termination for Breach. (a) In event of Purchaser's failure to cut designated timber on portions of Sale Area by Termination Date or termination for breach under BT9.31, Forest Service shall appraise remaining Included Timber, unless termination is under BT8.22 or BT8.34. Such appraisal shall be made with the standard Forest Service method in use at time of termination.

(b) If the sale is resold, damages due shall be the amount by which Current Contract Value, plus costs described in paragraph (d) of this Section, exceeds the resale value at new Bid Rates.

(c) If the contract is not reoffered or there are no responsive bids on the reoffered contract, damages due shall be the amount by which Current Contract Value exceeds the value determined by appraisal, plus costs described in paragraph (d) this Section.

(d) If applicable, the following costs shall be included in damages:

(i) The cost of resale or reoffering, including, but not limited to, salary costs, document preparation and duplication costs, mailing costs, and timber sale advertisement costs.

(ii) If Purchaser has failed to cut individual trees in the portions of Sale Area cut over and there is no resale of such individual trees, Purchaser shall pay Forest Service for cost of felling and removal or otherwise eliminating such uncut trees, except for occasional trees not cut for reasons stated in BT6.4.

(iii) The Government's loss caused by the delay in receipt of stumpage payments. Such loss will be measured by interest at the Current Value of Funds Rate established by the Secretary of the Treasury, on the unpaid contract value at Termination Date. Interest will be charged for the total number of months, or portions thereof, from Termination Date until midpoint of the contract resale period, less any time in excess of 1 year needed to make the resale.

(iv) Any increase in reforestation costs, including site preparation, seeding, and planting caused by Purchaser's failure to harvest Included Timber by Termination Date.

BT9.5 Settlement. If obligations of Purchaser have not been fully discharged by Termination Date, any money advanced or deposited hereunder shall be retained and applied toward unfulfilled obligations of Purchaser without prejudice to any other rights or remedies of Forest Service. Such funds may be treated as cooperative deposits under BT4.218 for uncompleted work 30 days after receipt of written notice from Forest Service to Purchaser of work to be done and Purchaser's failure to deny the obligation or to do the work.

BT9.6 Contract Closure. Contracting Officer shall give appropriate written notice to Purchaser when Purchaser has complied with the terms of this contract. Purchaser shall be paid refunds due from the Timber Sale Account under BT4.24 and excess cooperative deposits under BT4.218.

TRAFFIC CONTROL PLAN AND SPECIFICATIONS PURSUANT TO BT6.33 SAFETY

Unless otherwise agreed, the following measures are required to provide adequate warning of hazards for users of roads and trails adjacent to Purchaser's Operations.

Part I. Signing and Other Warning Methods:

(a) Signs. The following signs are required when Purchaser's Operations are in progress adjacent to or on Forest Service controlled roads and trails:

MINIMUM LETTER SIZE AND LEGEND	MINIMUM SIZE AND SHAPE	WHEN AND WHERE REQUIRED
1. LOGGING OPERATIONS NEXT <> MILES (4" letters)	24" (rectangle) 36"	Min. 100 ft. outside of any continuous work areas, on roads listed in CT5.31# and trails listed in Part II.
2. LOGGING OPERATIONS (3" letters)	24" (diamond) 24"	To be used in conjunction with "Logging Operations Next <> Miles" and where work area is not continuous.
3. FOR LOGGING USE ONLY (3" letters)	24" (diamond) 24"	Required where roads listed in CT5.31# and temporary roads intersect with CT5.31# roads. Install a cross ditch to discourage use when sign is covered or removed for extended periods.
4. TRUCKS (4" letters)	24" (diamond) 24"	At critical intersections on roads listed in CT5.31# when traffic is heavy or otherwise exceeds volumes stated in Part II below. Remove or cover when the sign is not applicable.
5. END LOGGING OPERATIONS (4" letters)	24" (rectangle) 36"	Use in conjunction with "Logging Operations Next <> Miles" and "Logging Operations."
6. TREE FELLING AHEAD (3" letters)	24" (diamond) 24"	Required 200 feet in advance of danger area where timber is being felled adjacent to all roads, including temporary roads, and trails.
7. ROAD MACHINERY AHEAD (3" letters)	24" (diamond) 24"	Required at least 200 feet in advance of Purchaser road maintenance operations on roads listed in Schedule CT5.31#.

TRAFFIC CONTROL PLAN AND SPECIFICATIONS - BT6.33 Safety (continued)

All signs shall meet requirements as specified in Parts I and VI of the Manual of Uniform Traffic Control Devices (MUTCD).

Sign borders and lettering shall be black. Borders are 1/2 inch wide, inset 1/2 inch from outside edge of sign. All sign backgrounds shall be orange, except signs #1 and 5 which shall be reflectorized orange.

Signs shall be installed on posts, with a 5 foot minimum ground clearance, or on temporary supports complying with MUTCD standards.

All signs are to be removed or covered when operations are interrupted for seasonal nonuse or other extended periods.

Purchaser shall furnish State-certified flag personnel and advance warning signs when cable or helicopter logging above roads or trails, felling adjacent to roads or trails, where logs being bucked may roll into roads or trails, and in areas where fallout from blasting may occur. Except as identifed in Part II, Purchaser may temporarily block roads listed in CT5.31# and temporary roads in lieu of furnishing flag personnel. On roads controlled by other jurisdictional authorities, Purchaser shall receive approval from that authority for Purchaser's safety measures and traffic control plans before commencement of operations.

(b) Barricades. On roads listed in CT5.31#, if Purchaser's Operations cause the traveled way or road shoulders to be constricted overnight, or longer, by such obstructions as decked logs, parked equipment, or piled slash, Purchaser shall place barricades on both sides of the encroaching obstruction to safely channel traffic around such obstructions. Barricades shall remain in place until the obstruction is removed.

Barricades shall be Type II and meet specifications in MUTCD, Part VI. Barricades must be at least 3 feet high. Rails must be at least 2 feet long. Striping shall be alternating orange and white, sloping at a 45 degree angle, and reflectorized. For rails 2 feet to 3 feet long, striping shall be 4 inches wide. For rails longer than 3 feet, striping shall be 6 inches wide. Two rails, 8-12 inches in width, must face each direction.

Barricades shall be equipped with warning lights which shall be Type A low intensity flashing and shall be maintained so as to be capable of being visible on a clear night from a distance of 3,000 feet.

(c) Other Traffic Control Methods. The posting of CB channel signs may be authorized.

On roads listed in CT5.31#, Purchaser may be authorized to install temporary gates, barricades (except cables), or natural barriers. The devices must be installed with the necessary hazard markers, be reasonably passable by Forest Service, and be removed prior to acceptance of the subdivision being served by the road.

TRAFFIC CONTROL PLAN AND SPECIFICATIONS - BT6.33 SAFETY
(continued)

Part II. Specific Requirements: **None**

Purchaser and Forest Service agree to the above stated requirements of the Traffic Control Plan:

Name	Name
Title	Title
Date	Date

CT2.11# - TIMBER SUBJECT TO AGREEMENT *(01/2003)*

In addition, there is within Sale Area an unestimated quantity of:

Species	Product
Landing Piles	**Misc-Conv.**

that shall be Included Timber upon written agreement.

CT2.35# (OPTION 1) - INDIVIDUAL TREE DESIGNATION *(06/2008)*

All **material in decks and piles as located on landings as shown on Sale Area Map** which meet the minimum tree diameter stated on Page 1 are designated for cutting. Additional timber to be cut, if any, will be designated for cutting in accordance with BT2.37.

Leave trees, Marked with
N/A, or identified by **N/A**, are not to be cut, unless designated by the Forest Service.

CT4.211 - DOWNPAYMENT *(02/2008)*

The downpayment amount shown on Page 1 may not be applied toward any other payment required under the provisions of this contract, except damages determined pursuant to BT9.4, transferred to other timber sales, or refunded until (a) stumpage value representing 25 percent of the total bid value of the timber sale is shown on Timber Sale Account to have been cut, removed, and paid for, or (b) the estimated value remaining to be cut and removed, as shown on Timber Sale Account, is equal to or less than the amount of the downpayment, or (c) if 36 CFR 223.49(e) is applicable, the estimated value remaining to be cut and removed, as shown on Timber Sale Account, is equal to or less than the amount of the downpayment. For lump sum timber sales, the downpayment may be applied to payment for release of the single payment unit.

If Forest Service makes a determination that this contract should not have been included under increased downpayment requirements (36 CFR 223.49(e)), the downpayment shall be revised and applied in accordance with 36 CFR 223.49(f).

CT4.212 - TEMPORARY REDUCTION OF DOWNPAYMENT *(08/2009)*

Notwithstanding BT4.211 or CT4.211, upon the Purchaser's written request Forest Service may temporarily reduce the downpayment when Purchaser's scheduled operations are delayed or interrupted for 30 or more consecutive days, or the contract term is extended for 30 or more consecutive days for any of the following reasons:

(1) Forest Service requests or orders Purchaser to delay or interrupt scheduled operations for reasons other than breach;

(2) Purchaser interrupts or delays scheduled operations to work on a sale designated by the Forest Service as in urgent need of harvesting; or

(3) An adjustment of the contract term authorized upon a determination of substantial overriding public interest, or an urgent removal contract term extension under 36 CFR 223.53.

When Purchaser is not cutting or removing timber under contract during a qualifying period of delay, interruption, or extension listed above the downpayment may be reduced to $1000 or 2 percent of the downpayment amount stated in the contract, whichever is greater. The Purchaser must restore the downpayment to the full amount stated in the contract within 15 days from receipt of the bill for collection and written notice from the Contracting Officer that the basis for temporarily reducing the downpayment no longer exists. Purchaser shall not cut or remove timber on a contract where the downpayment has been temporarily reduced until the downpayment amount stated in the contract is fully restored.

CT4.4 - PAYMENTS NOT RECEIVED *(08/2012)*

(a) Payments are due and payable on the date of issue indicated on the bill for collection. When a payment for timber cut and other charges is not received at the location designated by Forest Service by the date specified in the bill for collection, Contracting Officer will suspend all or any part of Purchaser's Operations until payment or acceptable payment guarantee is received. Other charges include, but are not limited to:

(i) Slash disposal and road maintenance deposits;
(ii) Cooperative work at rates established by specific agreement under BT4.218;
(iii) Damages pursuant to BT9.4;
(iv) Road use fees;
(v) Restoration of downpayment pursuant to BT4.22;
(vi) Periodic payments pursuant to BT4.213;
(vii) Extension Deposits pursuant to BT4.217; and
(viii) Other mandatory deposits.

(b) Failure to pay amounts due by the date specified in the bill for collection shall be considered a breach under BT9.3. The 30-day notice period prescribed therein shall begin to run as of the end of business on the date specified for receipt of payments. If the performance or payment is guaranteed by surety bond, the surety will receive a copy of the written notification of breach. Demand will be made on the surety or other institution providing the guarantee or bond instrument for immediate payment 10 days after issuance of written notification of the breach.

(c) Pursuant to the Debt Collection Improvement Act of 1996, as amended, if payment is not received by Forest Service within 15 days after the date of issue indicated on the bill for collection:

(i) Simple interest shall be assessed at the Current Value of Funds Rate as established by the Secretary of the Treasury. Interest will begin to accrue as of the date of issue indicated on the initial bill for collection.

(ii) Debtors will be assessed administrative charges, in addition to the delinquent amount due. Administrative charges are those additional costs incurred by the Government in processing, handling, and collecting delinquent debts.

(iii) A penalty charge of six (6) percent per annum will be assessed on any portion of a debt delinquent more than 90 days. This penalty charge is in addition to interest and administrative charges under paragraphs (c)(i) and (c)(ii). The penalty charge shall accrue from the date of issue indicated on the bill for collection and shall be assessed on all outstanding amounts, including interest and administrative costs assessed under paragraphs (c)(i) and (c)(ii).

(iv) Payments will be credited on the date received by the Federal Depository or Collection Officer designated on the bill for collection.

(d) Forest Service remedies for Purchaser's failure to make payment for timber cut and other charges when due, except for accrual of interest, suspension of all or any part of Purchaser's Operations, and administrative offset, shall be stayed for so long as:

(i) A bona fide dispute exists as to Purchaser's obligation to make such payment and
(ii) Purchaser files and prosecutes a timely Claim.

Sale Name: Frosty Decks

CT5.12# - USE OF ROADS BY PURCHASER *(01/2003)*

Purchaser's use of existing roads identified on Sale Area Map by the following codes is prohibited or subject to restrictive limitations, unless agreed otherwise:

Code	Use Limitations
X	Hauling prohibited
R	Hauling restricted
P	Use prohibited
A	Public use restriction
W	Regulation waiver

Roads coded A will be signed by the Forest Service to inform the public of use restrictions. Purchaser's use of roads coded R, A, or W shall be in accordance with the following restrictions:

See Restricted Road List Table.

TABLE PURSUANT TO CT5.12# - USE OF ROADS BY PURCHASER *(06/1999)*

Restricted Road List

Road Number	Road Name	Termini From	Termini To	Map Legend	Description of Restrictions
N/A					

Title and Date of Governing Road Rules Document:

Commercial Road Rules	Effective Date
Deschutes NF, Road Rules for Commercial Users	June 2009

Sale Name: Frosty Decks

CT5.31# - ROAD MAINTENANCE REQUIREMENTS *(01/2003)*

Purchaser shall maintain roads in accordance with the following Contract Road Maintenance Requirements Summary:

See Contract Road Maintenance Requirements Summary Table.

CT5.31# - ROAD MAINTENANCE REQUIREMENTS. (7/01) Purchaser shall maintain roads in accordance with the following Contract Road Maintenance Requirements Summary:

CONTRACT ROAD MAINTENANCE REQUIREMENTS SUMMARY TABLE PURSUANT TO C5.31# - ROAD MAINTENANCE REQUIREMENTS *(07/2001)*

Road	Termini		Miles	Applicable Pre-Haul Road Maintenance Specifications											
	From	To		T-803	T-831	T-832	T-834	T-838	T-854	T-891					
4600162	46	EOU	2.30	P	P	P	P	P	P	P					

Road	Termini		Miles	Applicable During Road Maintenance Specifications											
	From	To		T-803	T-812	T-831	T-832	T-834	T-838	T-891					
4600162	46	EOU	2.30	P	P	P	P	P	P	P					

Road	Termini		Miles	Applicable Post-Haul Road Maintenance Specifications											
	From	To		T-838	T-891										
4600162	46	EOU	2.30	P	P										

P = Purchaser Performance Item, D = Deposit to Forest Service, D3 = Deposit to Third Party, OPT = Optional, SPS = Special Project Specification, EOU = End Of Unit

Description of work required by the above listed T-specs is shown in the following ROAD MAINTENANCE REQUIREMENTS SPECIFICATION table, and included in the timber sale contract.

Sale Name: Frosty Decks

ROAD MAINTENANCE REQUIREMENTS SPECIFICATION TABLE PURSUANT TO CT5.31# - ROAD MAINTENANCE REQUIREMENTS (7/01)

1	2	3			4	5	6			7	8	9	
Road No. and Termini	Special Project Specification	Travel Way			Brushing And Log Out	Surfacing	Dust Abatement			Seasonal Maintenance	Snow Removal	Post Haul	
		Width	X Slope	Comp			Product	Applic Rate	Width			Block	Treat
4000162 46 - EOU	T-803-01F T-812-01F T-832-01F T-834-01F T-891-01F				T-838		OPT		EX	W	TS		PR

CT5.31# - ROAD MAINTENANCE REQUIREMENTS (7/2001)

Column No.	**Heading**	**Entry**	*Explanation*
	Any	Blank	Except as otherwise described, no entry indicates Purchaser is not authorized or required to perform the work item(s).
	Any	RC	This work requirement applies only when haul of sale related construction materials occurs.
2	Special Project Specification	Number	Entry indicates Special Project Specification which applies.
3	Travel Way	EX	Purchaser shall maintain the traveled way to the width existing upon entry, or at the completion of Specified Road work.
		Numbers	Purchaser shall maintain the traveled way to the standard width indicated by the entry, plus curve widening, in accordance with Section T-811. If required, the road template shall be shaped to this width and to the designated cross slope before haul and during recurring maintenance.
		IS, C, OS, F, or AI	Cross slopes are designated as: IS (Inslope), C (Crown), OS (Outslope), F (Flat), AI (As Is).
		A or B	If compaction is required.
4	Brush and Log Out	Numeric & R and or L	Purchaser shall remove brush for specified width on either or both the right (R) side or left (L) side of road.
		As Staked	Limits of brushing are as staked or marked in the field.
		OPT	Purchaser may use hand or mechanical means of brushing.
		H	Only hand brushing may be used.

ROAD MAINTENANCE REQUIREMENTS SPECIFICATION CODES TABLE PURSUANT TO CT5.31# - ROAD MAINTENANCE REQUIREMENTS (7/2001)

Column No.	**Heading**	**Entry**	*Explanation*
5	Surfacing	Aggregate Grading	Purchaser shall place surfacing on roads listed according to the grading indicated.
6	Dust Abatement	OPT	Product selection is Purchaser's choice from those listed in Section T-812.
		Product Abbr.	Unless otherwise agreed, Purchaser is restricted to product listed corresponding to the abbreviation shown in Section T-812; (i.e., LigS = Lignon Sulfonate) Application rates are estimated amounts.
		EX	Purchaser shall abate dust on the existing width
		Numbers	Purchaser shall abate dust to the width indicated by entry.
7	Seasonal Maintenance	W	Waterbars and/or crossditching shall be required prior to expected seasonal precipitation.
		B	Entrance barriers shall be installed by Purchaser prior to nonuse periods.
8	Snow Removal	TS	Snowplowing authorized for Purchaser's Operations without recreation access being provided per Section T-803 requirements.
		JU	Snowplowing authorized, but must provide for recreation joint use per Section T-803 requirements.
		Blank	Snowplowing is not authorized. Forest Service may authorize plowing by permit when not in conflict with other uses.
9	Post Haul	PR	PR denotes that work is Purchaser's Responsibility to perform.

CT6.405 - ALTERNATE REMOVAL OF INCLUDED TIMBER *(05/2005)*

Purchaser and Forest Service may agree to alternate removal requirements of Included Timber contained on Page 1. Alternate removal requirements are to be set forth in an agreement signed by both Purchaser and Contracting Officer. The terms of the agreement binds both parties and becomes part of the timber sale contract.

The development and execution of the agreement is based upon the determination by the Contracting Officer that removal of Included Timber is economically impractical if Purchaser has no ready market for such logs in the tributary area. A tributary area is defined as the area in which the Purchaser and competitors regularly deliver saw logs, or 200 miles from the Sale Area, whichever distance is greater.

The agreement for alternate removal requirements shall be executed prior to removing any timber from the Payment Units included in the agreement. Alternate removal requirements shall apply only to whole units and not to portions of units. All material meeting alternate removal specifications shall be cut and removed to locations designed in the agreement.

Volumes of material with alternate removal requirements will be determined from the National Cruise report for the sale. Purchaser will be charged for the following:

a) stumpage value at current contract rates of the alternatively removed timber;
b) plus the cost of other work required by the Forest Service to dispose of alternatively removed material;
c) plus the difference between the appraised transportation cost of the Sawtimber and/or Nonsawtimber material involved and the appraised transportation cost of the alternative.
d) Minus any work required to be completed by the Purchaser associated with alternate removal requirements.

Charges will be debited to the Purchaser's timber sale account.

Upon acceptance of the alternate removal requirements, the Payment Unit will be removed from the Sale Area under BT6.36.

Title to material included in the alternate removal agreement shall remain with the Forest Service.

CT6.42# - YARDING/SKIDDING REQUIREMENTS *(06/2010)*

Purchaser shall submit for Forest Service approval a Yarding/Skidding Plan prior to the start of felling operations. Requirements other than those specified in the following table may be approved. When appropriate, such approval shall include adjustments in Current Contract Rates and revision of the Sale Area Map. In no case shall the adjustments result in Current Contract Rates less than Base Rates.

Location of all skid roads and trails, tractor roads, skyline corridors, mechanized harvester trails, forwarder roads, and other log skidding facilities, shall be approved prior to their use or construction.

See attached table for requirements.

TABLE PURSUANT TO CT6.42# - YARDING/SKIDDING REQUIREMENTS.
(06/2010)

YARDING/SKIDDING REQUIREMENTS	*PAYMENT UNITS*
1. Ground based equipment is required.	ALL
2. All Included Timber shall be loaded and removed via mechanized equipment such as a loader and log truck, self-loader or as agreed to by Forest Service.	ALL

CT6.7 - SLASH DISPOSAL *(06/2008)*

As used in the following Subsections, the term "slash" is vegetative debris including, but not limited to, cull logs, blasted or pushed-out stumps, chunks, broken tops, limbs, branches, rotten wood, damaged brush, damaged or destroyed reproduction, saplings or poles, resulting from Purchaser's Operations.

Any burning of slash or refuse by Purchaser is subject to CT7.201.

Forest Service may agree to substitute methods of slash disposal if such substitute methods will give equally satisfactory results.

Forest Service may waive specific slash treatment requirements. Purchaser's Timber Sale Account will be charged for any slash treatment requirements waived or for work taken over by Forest Service. The amount of such charges will be determined by Forest Service if Purchaser has not begun felling operations. If felling operations have begun, charges will be determined by mutual agreement.

Forest Service may enter into a written agreement with the Purchaser for the Purchaser to complete slash disposal work originally scheduled to be done by the Forest Service. The agreement will describe the work to be completed by the Purchaser, and the value of such work. Value of the work to be done will be based upon the slash disposal plan in which the cooperative deposits were calculated, and will include Forest Service overhead. Any deposits paid by the Purchaser for this work will be credited to the Purchaser¿s timber sale account. This work is in addition to that required by CT6.74#.

Forest Service may also enter into a written agreement with Purchaser for the Purchaser to remove slash from landings, subject to BT3.41. Brush disposal deposits paid by the Purchaser for the Forest Service to burn landing piles will be credited to the Purchaser's timber sale account in the amount shown in the brush disposal plan, less the amount needed by the Forest Service for final cleanup of the landings following removal of the landing slash piles by the Purchaser. The credit will be made following the final removal by the Purchaser of all Included Timber, and slash piles, from the Sale Area.

CT6.74# - SLASH TREATMENT REQUIREMENTS *(04/2003)*

Purchaser shall pile, burn, yard, construct firelines or otherwise treat slash defined in CT6.7 within designated areas. Work required of Purchaser shall be in accordance with the following slash plan and specifications, and the Sale Area Map.

Unless otherwise agreed, or shown in attached slash plan or specifications, when Included Timber is removed during Normal Operating Season, required slash work shall be completed within 30 days of removal of approximately three-quarters of the volume in the unit. When Included Timber is removed outside Normal Operating Season, required work will be completed within 30 days of the beginning of the next Normal Operating Season.

See following specifications.

SPECIFICATIONS PURSUANT TO CT6.74# -SLASH TREATMENT REQUIREMENTS (02/2002)

Slash Plans and Specifications for Piling and/or Decking Slash on Landings and Temporary Roads (Pursuant to CT6.7 and CT6.74#)

1. Slash to be Piled and/or Decked

a. Slash resulting from the construction of landings and temporary roads and slash accumulated on the landings from the logging operation shall be piled and/or decked. Partially pushed out stumps are considered to be included as pushed out stumps in the CT6.7 definition of slash.

b. Slash created in this operation which lies outside the posted cutting area is not required to be piled unless within a landing or temporary road. However, such slash shall be pulled inside the posted cutting area boundary.

c. Chips created and not removed from chipping operations on landings are to be scattered across the entire area of the landings to a depth of no more than 3 inches.

2. Construction and Location of Piles and/or Decks

a. Slash piles shall be located at least 25 feet from the crown or drip line of any dead or live tree or equal distance between standing dead or live trees, whichever is greater. These piles shall be a minimum of 6 feet in height and 12 feet in diameter, if sufficient slash is available.

b. Piles and/or decks shall be free of rocks and dirt.

c. All material extending beyond the general contour of the piled Slash shall be trimmed off and added to the pile.

3. Equipment Requirements

Machines used for piling slash shall be equipped with brush blades or detachable rake fronts or grapples.

CT6.8 - MEASURING *(04/2003)*

The estimated quantity of timber in AT2 was determined in advance of advertisement. Any timber subsequently added or deleted under BT2.13, BT2.14, BT2.31, BT2.32, BT2.33, BT2.34, BT2.35, or BT2.37 will be measured by the Forest Service and formulated using Forest Service Handbook 2409.12, Timber Cruising Handbook Standards, unless otherwise agreed to in writing.

CT6.81 - ACCOUNTABILITY *(04/2003)*

The following requirements are applicable to product removal permits:

1. Forest Service will issue to Purchaser or designated representative(s) serially numbered Product Removal Permit Books for use only on this sale. Product Removal Permit Books, whether used or unused, shall be returned to issuing Forest Service Office in accordance with instructions contained on cover of each book.

2. All permits shall be completed and attached to load by an individual named in writing, other than the truck driver, in accordance with the instructions on the inside cover of the Product Removal Permit Book. Product Removal Permit will be attached prior to removal from the immediate vicinity where loading is done. The permit will remain attached until the load is decked at the delivery point.

3. Purchaser shall require truck drivers to stop when requested by Forest Service for purposes of monitoring accountability when products are in transit. Methods to be used to alert drivers of an impending stop shall be agreed to in advance of hauling products.

CT6.84 (OPTION 1) - USE OF PAINT BY PURCHASER *(05/2005)*

Notwithstanding BT6.81, use of paint by the Purchaser within the Sale Area in the color(s) used by the Forest Service in the preparation of the sale and administration of the contract will be by written approval of the Forest Service.

CT7.1 - PLANS *(04/2003)*

The plan shall state how Purchaser's representative or alternates will be contacted in a fire emergency, both during periods of operation and at other times such as evenings or weekends. Purchaser shall certify compliance with specific fire precautionary measures included as Subsections under CT7.2 - Specific Fire Precautions, before beginning operations during Fire Precautionary Period (closed season) and shall update such certification when operations change.

If helicopter yarding is required, the plan shall include a schedule of rates mutually agreed to for computing Purchaser costs incurred toward meeting Purchaser's obligations on Page 1, or for paying for helicopters controlled by Purchaser and used under Forest Service direction for suppressing Operations fires or other fires on Sale Area, excluding Negligent Fires.

CT7.2 - SPECIFIC FIRE PRECAUTIONS *(04/2003)*

When the industrial fire precautions level is I or higher, unless waiver is granted under CT7.22, specific required fire precautionary measures are as follows:

A. Fire Security.

Purchaser will designate in writing a person or persons who shall perform fire security services listed below on Sale Area and vicinity. The designated person will be capable of operating Purchaser's communications and fire fighting equipment specified in the contract, excluding helicopters, and of directing the activities of Purchaser's personnel on Forest fires. Such person must report any fire detected to Forest Service within 15 minutes of detection. In lieu of having the designated person perform the required supervisory duties, Purchaser may provide another person meeting the qualifications stated above to direct the activities of Purchaser's personnel and equipment during all fire fighting activities.

Services described shall be for at least 1 hour from the time Purchaser's Operations are shut down. For the purposes of this provision, personnel servicing equipment, and their vehicles, who are not engaged in cutting or welding metal are excluded.

Fire security services shall consist of moving throughout the operation area or areas constantly looking, reporting, and taking suppression action on any fires detected. Where possible, the designated person shall observe inaccessible portions of helicopter operating areas from vantage points within or adjacent to Sale Area.

Purchaser shall furnish fire security services based on the predicted industrial precaution level, obtained by Purchaser from the appropriate Ranger District Headquarters. If predictions made after 6:00 p.m. local time, are significantly different than originally estimated, Forest Service will inform Purchaser when changes in fire security services are indicated.

B. Fire Extinguishers and Equipment (on Trucks, Tractors Power Saws, etc.).

(a) Each yarder or loader equipped with an internal combustion engine or other spark emitting source shall be equipped with a readily accessible fire extinguisher, with an Underwriter's Laboratory (UL) Rating of at least 5 B,C.

(b) All power-driven equipment operated by Purchaser on National Forest land, except portable fire pumps, shall be equipped with one fire extinguisher having a UL rating of at least 5 B,C and one "D" handled or long handled round point shovel, size O or larger. In addition, each motor patrol, truck and passenger-carrying vehicle shall be equipped with a double-bit axe or Pulaski, 3-1/2 pounds or larger.

(c) Equipment required in (a) and (b) shall be kept in a serviceable condition and shall be readily available.

(d) Each gasoline power saw operator shall be equipped with a pressurized chemical fire extinguisher of not less than 8-ounce capacity by weight, and one long handled round point shovel, size O or larger, except at a landing where a suitable fire extinguisher and shovel are immediately available. The extinguisher will be kept in possession of the saw operator at all times. The shovel shall be accessible to the operator within 1 minute.

(e) Each helicopter shall be equipped with one fire extinguisher having a UL rating of at least 5 B,C mounted inside the aircraft within reach of the pilot's operating position.

(f) One refill for each type or one extra extinguisher sufficient to replace each size extinguisher required on equipment shall be safely stored in the fire tool box or other agreed upon place on Sale Area that is protected and readily available.

(g) At each area where helicopters are being serviced or supplied, a carbon dioxide fire extinguisher with a UL rating of at least 20 B,C will be provided on the site and placed where it is available for immediate use.

C. Spark Arrestors and Mufflers.

Each internal combustion engine shall be equipped with a spark arrester qualified and rated under USDA Forest Service Standard 5100-la as shown in the National Wildfire Coordination Group Spark Arrester Guide, unless it is:

(a) Equipped with a turbine-driven exhaust supercharger such as the turbocharger. There shall be no exhaust bypass.

(b) A multi-position engine, such as on power saws which must meet the performance levels set forth in the Society of Automotive Engineers (SAE) "multi-positioned small engine exhaust fire ignition standard, SAE recommended practice J335B" as now or hereafter amended.

(c) A passenger carrying vehicle or light truck, or medium truck up to 40,000 GVW, used on roads and equipped with a factory designed muffler complete with baffles and an exhaust system in good working condition.

(d) A heavy duty truck, such as a dump or log truck, or other vehicle used for commercial hauling, used only on roads and equipped with a factory designed muffler and with a vertical stack exhaust system extending above the cab.

Exhaust equipment described in this Subsection, including spark arresters and mufflers, shall be properly installed and constantly maintained in serviceable condition.

D. Fire Tools.

Purchaser shall furnish serviceable fire fighting tools in a readily accessible fire tool box or compartment of sound construction with a hinged lid and hasp so arranged that the box can be secured or sealed. The box shall be red and marked "Fire Tools" in letters at least 1 inch high. It shall contain a minimum of:

(a) Two axes or Pulaskis with a 32 inch handle.

(b) Three adze eye hoes. One Pulaski may be substituted for one adze eye hoe.

(c) Three long handled, round point shovels, size 0 or larger.

E. Tank Truck.

Purchaser shall provide a tank truck or trailer, containing not less than 300 gallons of water, during yarding, skidding, loading, land clearing, right-of-way clearing, mechanical falling, and mechanical treatment of slash. Such tank truck or trailer shall be maintained in a serviceable condition and located within 10 minutes, round trip, from each operating side during Fire Precautionary Period (closed season), except as provided under BT7.21.

The tank truck or trailer shall be equipped with a pump capable of discharging 20 gallons of water per minute, using a 1/4 inch nozzle tip, through a 50 foot length of rubber or poly lined hose. In addition, 500 feet of serviceable hard rubber poly or rubber lined or FJRL hose of not less than 1 inch outside diameter, fitted with a nozzle capable of discharging a straight stream of 1/4 inch diameter and a spray pattern shall be immediately available for use. The tank, pump, nozzle and at least 250 feet, of the total 500 feet of hose, shall be connected and ready for use at all times. Synthetic hoses may be used by

agreement.

If a trailer is used, it shall be equipped with a hitch to facilitate prompt movement. A serviceable tow vehicle shall be immediately available for attachment to the trailer and must meet the time requirements stated above. Such truck or trailer shall be equipped to operate for a minimum of 8 hours.

Where designated on Sale Area Map, Purchaser shall provide a tank trailer or water source and pumping equipment, including accessories, which can be lifted and transported by the yarding system. The component parts shall meet all specifications above. The tank trailer or water supply and pumping accessories shall be deliverable to a fire, in area of operations, within 15 minutes of detection.

In lieu of the above tank trailer or water supply for helicopter operations, Purchaser may provide a suitable helicopter water bucket with a 300 gallon capacity. When Purchaser provides a water bucket, a water source shall be provided within 5 minutes round trip flight time from operating side.

F. Communications.

During Purchaser's Operations, excluding powersaw falling and bucking, Purchaser shall provide adequate two-way communication facilities to report a fire to Forest Service within 15 minutes of detection. Citizen band radios (CB's) are not considered adequate two-way communications because FCC Regulations prohibit commercial use.

G. Smoking and Open Fire Restrictions. Smoking and fires shall be permitted only at the option of Purchaser. Purchaser shall not permit open fires on Sale Area without advance permission in writing from Forest Service.

H. Blasting.

Blasting shall be permitted only for road construction purposes unless advance permission is obtained from Forest Service.

Whenever the Industrial Fire Precaution Level is II or greater, a fire security person equipped with a long handled round point No. 0 or larger shovel and a 5 gallon backpack pump can filled with water, will stay at location of blast for 1 hour after blasting is done. Blasting may be suspended by Forest Service, in areas of high rate of spread and resistance to control.

Fuses shall not be used for blasting. Explosive cords shall not be used without permission of Forest Service, which may specify conditions under which such explosives may be used and precautions to be taken.

I. Compliance with State Fire Laws.

Listing of specific fire precautionary measures in the foregoing Subsections is not intended to relieve Purchaser in any way from compliance with State fire laws covering fire prevention and suppression equipment, applicable to Purchaser's Operations.

J. Aircraft Communications.

Every aircraft used in conjunction with Purchaser's Operations shall be equipped with an operable radio system. The radio system shall be capable of transmitting and receiving on VHF frequency 122.85 Megahertz (MHz) with a minimum output of 5 watts at the transmitter. The system shall be located and installed so that the pilot can operate it while flying. A shielded all-weather broad-band antenna shall be part of the system. Radio and antenna shall be properly installed and maintained.

Upon discovery or notification of a fire on Sale Area, all aircraft pilots controlled by Purchaser shall monitor VHF frequency 122.85 MHz when within 5 miles of a fire and broadcast their intentions.

K. Logging Block Equipment.

Purchaser shall provide a serviceable 5 gallon backpack pump full of water, one axe, and one long handled round point shovel, size 0 or larger, at each haulback block through which a running line passes.

The area below such blocks must be kept clear of all flammable debris under 4 inches in diameter for a distance of 6 feet in all directions. Material larger than 4 inches that poses a fire risk, such as punky logs, must also be removed.

Purchaser shall avoid line-rub on rocks or woody material which may result in sparks or sufficient heat to cause ignition of fire.

CT7.201 - BURNING BY PURCHASER *(04/2003)*

Notwithstanding the Fire Precautionary Period limitation of BT7.2, the Purchaser is required to obtain written permission from the Forest Service prior to any burning on National Forest Lands.

CT7.22 - EMERGENCY FIRE PRECAUTIONS *(04/2003)*

Purchaser shall restrict operations in accordance with the Industrial Fire Precaution Levels attached. Forest Service may change the Industrial Fire Precaution Levels to other values upon revision of the National Fire Danger Rating System and may change the specific Industrial Fire Precaution Levels when such changes are necessary for the protection of the National Forest. When sent to Purchaser, the revised Industrial Fire Precaution Levels will supersede the attached levels.

INDUSTRIAL FIRE PRECAUTIONS SCHEDULE

LEVEL	INDUSTRIAL FIRE PRECAUTION
I.	Closed Season - Fire precaution requirements are in effect. A Fire Watch/Fire Security is required at this and all higher levels unless otherwise waived.
II.	Partial Hootowl - The following may operate only between the hours of 8 p.m. and 1 p.m. local time: power saws, except at loading sites; cable yarding; blasting; welding or cutting of metal.
III.	Partial shutdown - The following are prohibited: cable yarding - except that gravity operated logging systems employing non-motorized carriages may be operated between the hours of 8 p.m. and 1 p.m. local time when all blocks and moving lines are 10 feet or more above the ground, excluding the line between the carriage and the choker. power saws - except at loading sites and on tractor/skidder operations between the hours of 8 p.m. and 1 p.m. local time. In addition, the following are permitted between the hours of 8 p.m. and 1 p.m. local time: tractor, skidder, feller-buncher, forwarder, or shovel logging operations where tractors, skidders or other equipment with a blade capable of constructing fireline are immediately available to quickly reach and effectively attack a fire start; mechanized loading and hauling; blasting; welding or cutting of metal; any other spark-emitting operation not specifically mentioned.
IV.	General shutdown - All operations are prohibited.

The following definitions shall apply to these Industrial Fire Precaution Levels:

Cable yarding systems: A yarding system employing cables and winches in a fixed position.

Closed Season (Fire Precautionary Period): That time period each year when a fire hazard exists as described in AT14.

Hauling: Where hauling involves transit through more than one shutdown zone/regulated use area, the precaution level at the woods site shall govern the level of haul restrictions, unless prohibited by other than the Industrial Fire Precaution Level system.

Loading sites/woods site: A place where any product or material (including but not limited to logs, firewood, slash, soil, rock, poles, posts, etc.) is placed in or upon a truck or other vehicle.

Advance written waiver of the above precautions may be issued by the Contracting Officer or Forest Service Representative.

Such waiver, or substitute precautions under BT7.21, shall prescribe measures to be taken by Purchaser to reduce the risk of ignition, and/or the spread of fire. The Contracting Officer or Forest Service Representative shall consider site specific weather factors, fuel conditions, and specific operations that result in less risk of fire ignition and/or spread than contemplated when precaution level was predicted. Consideration shall also be given to measures that reduce the precaution levels above. Purchaser shall assure that all conditions of such waivers or substitute precautions are met.

Purchaser shall obtain the predicted Industrial Fire Precaution Level from the appropriate Ranger District)eadquarters. If predictions made after 6:00 p.m., local time, are significantly different than originally estimated, Forest Service will inform Purchaser when changes in restrictions or industrial precautions are indicated.

CT8.13 - DISCLAIMER OF EXPRESSED OR IMPLIED WARRANTY *(09/2004)*

Purchaser and Forest Service hereby agree, acknowledge, and accept that there is no expressed or implied warranty provided by the Forest Service that guarantees the Purchaser will be allowed to complete the removal of products sold under the terms of the contract. Upon execution of the contract, Purchaser hereby acknowledges the acceptance of the risk that this contract is subject to interruption or termination as a result of litigation associated with the environmental analysis process used by the Forest Service in the planning of this timber sale. If such interruption or termination occurs due to litigation, Purchaser agrees to accept as full compensation for such interruption remedies pursuant to BT8.33, or for termination remedies pursuant to BT8.34.

CT8.65# (Option 1) - USE OF TIMBER *(01/2004)*

(a) This contract is subject to the Forest Resources Conservation and Shortage Relief Act of 1990, as amended (16 USC 620, et seq.).

(b) Except for **None** determined pursuant to public hearing to be surplus, unprocessed Included Timber shall not be exported from the United States nor used in direct or indirect substitution for unprocessed timber exported from private lands by Purchaser or any person as defined in the Act (16 USC 620e).

(c) Timber in the following form will be considered unprocessed:

(i) Trees or portions of trees or other roundwood not processed to standards and specifications suitable for end product use;

(ii) Lumber, construction timbers, or cants intended for remanufacturing not meeting standards defined in the Act (16 USC 620e); and

(iii) Aspen or other pulpwood bolts exceeding 100 inches in length.

(d) Unless otherwise agreed in writing, unprocessed Included Timber shall be delivered to a domestic processing facility and shall not be mixed with logs intended for export.

(e) Prior to award, during the life of this contract, and for a period of 3 years from Termination Date, Purchaser shall furnish to Forest Service, upon request, records showing the volume and geographic origin of unprocessed timber from private lands exported or sold for export by Purchaser or affiliates.

(f) Prior to delivering unprocessed Included Timber to another party, Purchaser shall require each buyer, exchangee, or recipient to execute an acceptable agreement that will:

(i) Identify the Federal origin of the timber;

(ii) Specify domestic processing for the timber involved;

(iii) Require the execution of such agreements between the parties to any subsequent transactions involving the timber;

(iv) Require that all hammer brands and/or yellow paint must remain on logs until they are either legally exported or domestically processed, whichever is applicable; and

(v) Otherwise comply with the requirements of the Act (16 USC 620d).

(g) No later than 10 days following the execution of any such agreement between Purchaser and another party, Purchaser shall furnish to Forest Service a copy of each such agreement. Purchaser shall retain, for 3 years from Termination Date, the records of all sales, exchanges, or dispositions of all Included Timber.

(h) Upon request, all records dealing with origin and disposition of Included Timber shall be made available to Contracting Officer.

(i) For breach of this Subsection, Forest Service may terminate this contract and take such other action as may be provided by statute or regulation, including the imposition of penalties. When terminated by Forest Service under this Subsection, Forest Service will not be liable for any Claim submitted by Purchaser relating to the termination.

ROAD STRUCTURE DETAILS

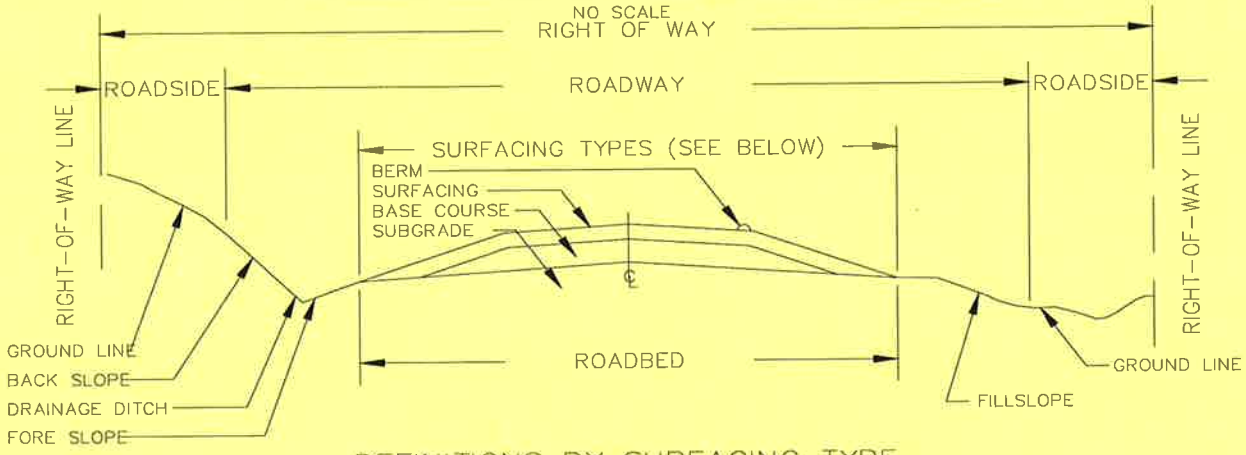

DEFINITIONS BY SURFACING TYPE

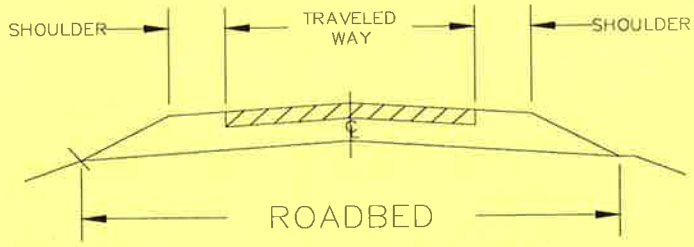

ASPHALT PAVED SURFACING SECTION

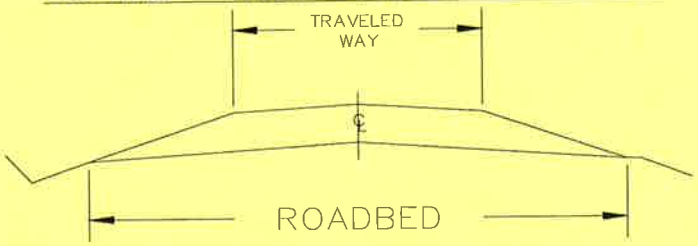

AGGREGATE SURFACING SECTION

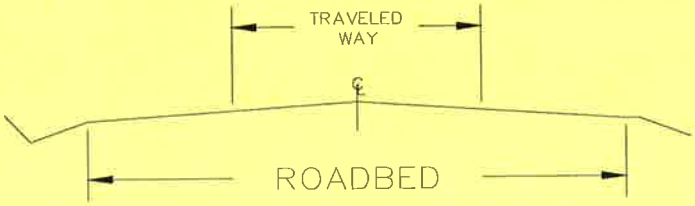

NATIVE MATERIAL SURFACING SECTION

NOTES

SHAPES AND DIMENSIONS WILL VARY WITH LOCAL CONDITIONS.

TITLE ILLUSTRATION OF ROAD MAINTENANCE TERMS		
DRAWING 801-1	APPROVED	

T-803 - SNOW REMOVAL (05/07)

803.01 Description

This Section provides for removal of snow from roads to facilitate logging operations and safe use.

803.02 Maintenance Requirements

(1) Erect signs required by the Sign Plan in the SUPPLEMENTAL SPECIFICATIONS.

(2) Perform work in a manner to preserve and protect roads and appurtenances, and
prevent erosion damage to roads, streams, and other Forest values.

(3) Do not undercut banks. Do not blade gravel or other surfacing material off the road.

(4) Keep roadbed drainage ditches, drain dips, and culverts functional when needed during operations and upon completion of operations.

(5) Control snow removal to identify the usable traveled way having roadbed support. Reshape over-width plowing as necessary to define the usable width.

(6) Space, construct, and maintain drainage holes in the dike of snow or berm caused by snow removal operations. Place drain holes to obtain surface drainage without discharging on erodible fills.

(7) Close roads to wheeled vehicles at times and in the manner specified in C(T)5.12 or the Road Rules document.

(8) Upon seasonal completion of Purchaser's Operations, effectively block the road by a snow barricade, unless otherwise approved by the Contracting Officer.

(9) Remove snow for either public access or project use as established in the SUPPLEMENTAL SPECIFICATIONS and meet the following requirements:

(a) Removal for Public Access (Method JU) - Remove snow from all of the traveled way, including turnouts, for safe and efficient use for both timber transportation and the public. Remove intruding windfalls, debris, or slough and slide material for the full width of the traveled way and deposit out of drainage's at locations designated by the Contracting Officer.

(b) Removal for Project Use (Method TS) - Remove snow from all or part of the traveled way, including sufficient turnouts for safe and efficient use for timber transportation and to protect the road. Remove intruding windfalls, debris or slough and slide material and dispose of only as necessary to provide passage for timber transportation. Removed materials may be deposited off the traveled way or outside the traveled way at locations designated by the Contracting Officer.

(10) When directed by the Contracting Officer, replace in kind, within sixty (60) days after the start of Normal Operating Season, any surfacing material which has been bladed off the road, unless otherwise agreed. Contracting Officer will notify Purchaser in writing as to the cubic yard equivalent of bladed off material by the start of the normal operating season.

803.03 Equipment

Purchaser may use any type of equipment to remove snow, providing:

a. Type or use of equipment is not restricted in C(T)5.12 or Road Rules document.

b. Equipment is of the size and type commonly used to remove snow and will not cause damage to the road.

c. The use of plows or dozers to remove snow requires written approval by the Contracting Officer. Equip plows or dozers with shoes or runners to keep the dozer blade a minimum of 2 inches above the road surface unless otherwise approved by the Contractor Officer.

803.04 Ice Control

Ice control may be performed by Purchaser when approved by the Contracting Officer in writing. Such approval will include ice control materials, application rates, and any specific requirements of use.

SUPPLEMENTAL SPECIFICATION (2/08)
T-803-01F
SNOW REMOVAL

02 Maintenance Requirements

(1) Delete the sentence and add the following: Erect signs in accordance with the Traffic Control Plan and Specifications Pursuant to B(T)6.33 Safety.

(9) Delete the sentence and add the following: Remove snow for either (a) public access or (b) project use listed in C(T)5.31# Road Maintenance Requirements, and meet the following requirements of the Traffic Control Plan and Specifications Pursuant to B(T)6.33 Safety.

T-812 - DUST ABATEMENT (05/07)

01 Description

This work consists of applying dust palliatives on roads shown in the Road Listing.

812.02 Materials

The dust palliative materials are shown in the Road Listing, unless shown as Optional for Purchaser's election. If Optional is shown then the Purchaser may use any of the products listed below. Dust palliative materials shall meet the following requirements:

A. Water (H2O) will be obtained from sources SHOWN ON THE DRAWINGS or listed in the SUPPLEMENTAL SPECIFICATIONS to Section T-891 Water Supply, unless otherwise approved by the Contracting Officer.

B. Lignin Sulfonate (LIG S) Provide certification that the material meets the requirements of Subsection 725.20 of the "Standard Specifications for Construction of Roads and Bridges on Federal Highway Projects (FP-03)" and the Forest Service Supplemental Specification 725.20.

C. Magnesium Chloride (MG CL2) Provide certification that that the material meets the requirements of Subsection 725.02 of the "Standard Specifications for Construction of Roads and Bridges on Federal Highway Projects (FP03) " and the Forest Service Supplemental Specification 725.02.

D. Calcium Chloride Brine (CA CL2B). Provide certification that the material meets the requirements of Subsection 725.02 of the " Standard Specifications for Construction of Roads and Bridges on Federal Highway Projects (FP03) " and the Forest Service Supplemental Specification 725.02..

E. Calcium Chloride Flake (CA CL2F). Provide certification that that the material meets the requirements of Subsection 725.02 of the "Standard Specifications for Construction of Roads and Bridges on Federal Highway Projects (FP03) " and the Forest Service Supplemental Specification 725.02..

F. Bituminous dust palliatives. Manufacture materials specifically for dust abatement purposes which conform to the requirements of Section T-892 for each listed road in the Road Listing.

812.03 Methods

As shown in the SUPPLEMENTAL SPECIFICATIONS, Purchaser may utilize a variety of methods to decrease or eliminate the need for dust abatement.

04 Equipment

A. Design, equip, and operate application equipment for spreading dust palliatives so that the material is uniformly applied at the rate and traveled way widths shown in the Road Listing.

B. For bituminous palliatives provide equipment that heats and applies the bituminous material. Provide a bituminous distributor that is self-powered and mounted on pneumatic tires and equipped with a pump and circulating spray bar, a tachometer, pressure gauges, accurate volume measuring devices such as visual volume dial or gauge calibrated to the tank, and a thermometer. Provide equipment which is a standard commercial type of proven performance.

C. Accomplish dilution of dust palliatives within the application vehicle with the water source protected from contamination. Circulate the resulting mixture at least five (5) minutes to ensure uniform mixing prior to application.

812.05 Maintenance Requirements

A. Limit water applications to abatement for hauling vehicles and provide at a frequency and rate which controls dust such that vehicle tail lights and turn signals remain visible. Vary rates of application as needed but remain low enough to avoid forming rivulets. Accomplish the abatement by sufficient frequency of application without saturating and softening the traveled way. Compacted or glazed road surface or wheel tracks may be loosened as needed for water penetration.

B. Apply all other dust palliatives at the rates and times agreeable to the Contracting Officer. The Road Listing shows the expected average application rate and may be varied to meet field conditions. Lignin Sulfonate, Magnesium Chloride, and Calcium Chloride Brine are listed as liters per square meter of the undiluted product at fifty (50), thirty-three (33), and thirty-eight (38) percent respectively. Calcium Chloride Flake is listed in Kilograms per square meter at seventy-seven (77) percent concentration.

C. Apply bituminous dust palliatives only when the surface to be treated contains sufficient moisture to obtain uniform distribution of the dust palliative unless noted differently in the SUPPLEMENTAL SPECIFICATIONS.

D. Prior to initial application, when needed, the road will be bladed and shaped under Section T-811, Blading.

E. Required subsequent applications may be applied to the existing road surface without blading.

F. Dust palliatives will not be applied in a manner that spatters or mars adjacent structures or trees, or placed on or across cattleguards or bridges. Discharge dust abatement material only on roads approved by the Contracting Officer.

SUPPLEMENTAL SPECIFICATION (2/08)
T-812-01F
DUST ABATEMENT

.02 Materials

A. Delete the words "the SUPPLEMENTAL SPECIFICATIONS to"

812.03 Methods

Delete the words "As shown in the SUPPLEMENTAL SPECIFICATIONS," and substitute the following: Roads to be treated with dust abatement are listed in C(T)5.31# Road Maintenance Requirements.

T-831 DITCH MAINTENANCE (10/07)

1.01 Description

This Section provides for routine maintenance of various types of ditches to provide a waterway which is unobstructed, as shown on the ROAD LISTING or DESIGNATED ON THE GROUND.

831.02 Maintenance Requirements

A. Maintain ditches by removing rock, soil, wood, and other materials. Maintained ditches shall function to meet the intent of the original design.

B. Undercutting backslopes during removal operations is not permitted.

C. Suitable material up to 4 inches in greatest dimension removed from the ditches may be blended into existing native road surface and shoulder or placed in designated berm.

D. Do not blend material from ditch cleaning operations into aggregate surfaced roads. Do not blade material across aggregate or bituminous surfaced roads, unless approved in writing by the Contracting Officer.

E. Haul material in excess of 831.02 D or subject to 831.02 E to a designated waste area under Section T-832. Remove excess materials temporarily stored on the ditch slope or edge of the shoulder daily.

F. Remove limbs and wood chunks in excess of 12 inches in length or 3 inches in diameter from ditches and place outside the roadway.

G. Clean paved surfaces of all materials resulting from ditch maintenance work.

H. Shape lead-off ditches to drain away from the traveled way.

I. Where DESIGNATED ON THE GROUND, included in the ROAD LISTING, SHOWN ON THE DRAWINGS or as ordered by the Contracting Officer invasive species of concern prevention practices shall be followed as listed below.

Invasive Species of Concern Prevention Practices
To be filled in by local FS invasive plant specialist, if applicable.

T-832 REMOVE AND END HAUL MATERIALS (05/07)

2.01 Description

Work consists of loading, hauling, and placing of slide, slough, or excess materials such as rock, soil, vegetation, and other materials to designated disposal sites.

832.02 Maintenance Requirements

A. Remove, end haul, and dispose of excess materials generated by work under other Sections of this contract.

B. Remove the slide and slough materials in the area extending approximately 6 feet vertically above the road surface and not more than 3 feet down slope from the roadbed. Dispose of material at designated sites as SHOWN ON THE DRAWINGS, identified in SUPPLEMENTAL SPECIFICATIONS, or as ordered by the Contracting Officer.

Reshape the slope which generated the slide material as nearly as practical to its original condition by equipment operating from road surface. Reshaping of roadside ditches in slide area shall be in accordance with Section T-831.

C. When approved by the Contracting Officer, fill slumps by compacting selected materials into roadway depressions. Compaction is by Method 2.

D. Place all materials in disposal sites as specified in the SUPPLEMENTAL SPECIFICATIONS, as SHOWN ON THE DRAWINGS, or as ordered by the Contracting Officer.

1. Method 1 - Side Casting and End Dumping. Material may be placed by side casting and end dumping. Where materials include large rocks, provide a solid fill by working smaller pieces and fines into voids. Shape the finished surfaces to drain.

2. Method 2 Layer Placement - Step or roughen surfaces on which materials are to be placed prior to placing any material. Place materials in approximately horizontal layers no more than 12 inches thick. Compact each layer by operating hauling and spreading equipment over the full width of each layer.

E. Repair any damage to existing aggregate or pavement surfaces.

SUPPLEMENTAL SPECIFICATION (2/08)
T-832-01F
REMOVAL AND END HAUL MATERIALS

.02 Maintenance Requirements

B. Add the following after the last sentence: Disposal of slide, slough or excess material shall be at the **N/A** aggregate source, Township ____ Range ____ Section ____, for roads listed in C(T)5.31# Road Maintenance Requirements.

D. Add the following after the first sentence: Specified method shall be Method **N/A**.

T-834 DRAINAGE STRUCTURE MAINTENANCE (10/07)

834.01 Description

This work consists of cleaning and reconditioning culverts and other drainage structures.

834.02 Maintenance Requirements

A. Clean drainage structures, inlet structures, culverts, catch basins, and outlet channels specified in the SUPPLEMENTAL SPECIFICATIONS. Clean catch basins by removing the material within the area SHOWN ON THE DRAWINGS.

B. Clean the transition from the ditch line to the catch basin a distance of 10 feet from the catch basin. Clean outlet channels and lead-off ditches a distance of 6 feet. Remove and place debris and vegetation so as to not enter the channel or ditch, or obstruct traffic. Haul debris and vegetation to a designated disposal area in accordance with Section T-832.

C. Hydraulic flushing of drainage structures is not allowed unless provided for in the SUPPLEMENTAL SPECIFICATIONS.

D. Cleaning and reconditioning are limited to the first 3 feet of inlet and outlet, determined along the top of the structure. Recondition culvert inlet and outlet by field methods such as jacking out or cutting away damaged metal which obstructs flow. Treat cut edges with a zinc rich coating, in accordance with AASHTO M 36M and ASTM A 849.

E. Where DESIGNATED ON THE GROUND, included in the ROAD LISTING, SHOWN ON THE DRAWINGS or as ordered by the Contracting Officer invasive species of concern prevention practices shall be followed as listed below.

Invasive Species of Concern Prevention Practices
To be filled in by local FS invasive plant specialist, if applicable.

SUPPLEMENTAL SPECIFICATION (2/08)
T-834-01F
DRAINAGE STRUCTURE MAINTENANCE

4.02 Maintenance Requirements

Delete the words "specified in the SUPPLEMENTAL SPECIFICATIONS" and substitute the following: for those roads listed in C(T)5.31# Road Maintenance Requirements

TYPICAL SECTION OF CATCH BASINS AND TRANSITION AREAS

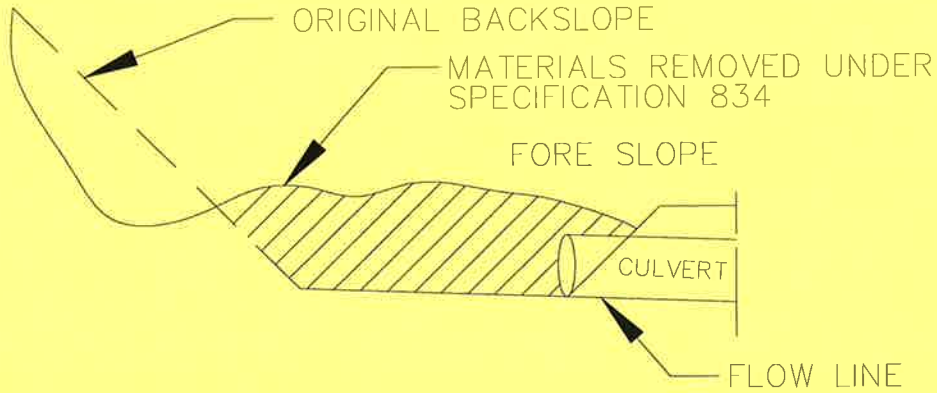

CROSS SECTION VIEW

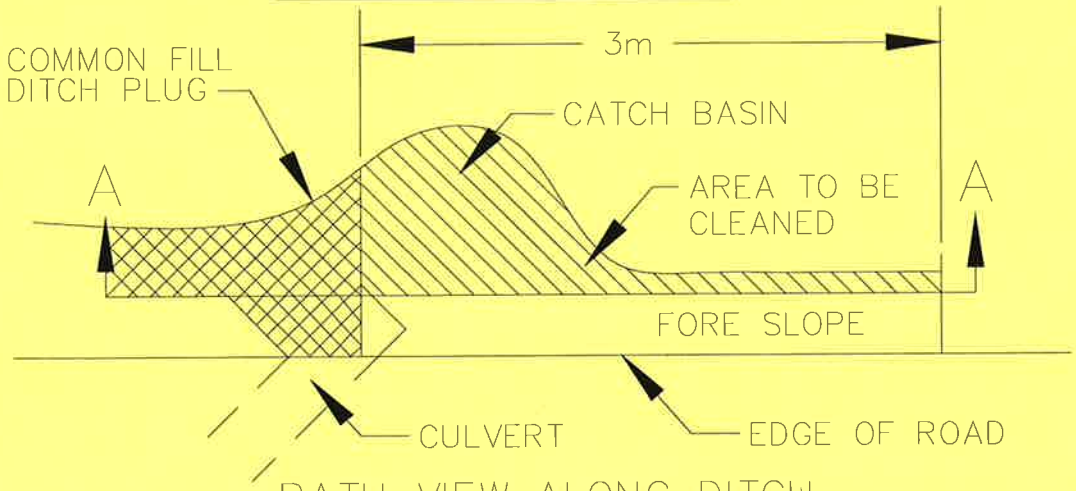

PATH VIEW ALONG DITCH

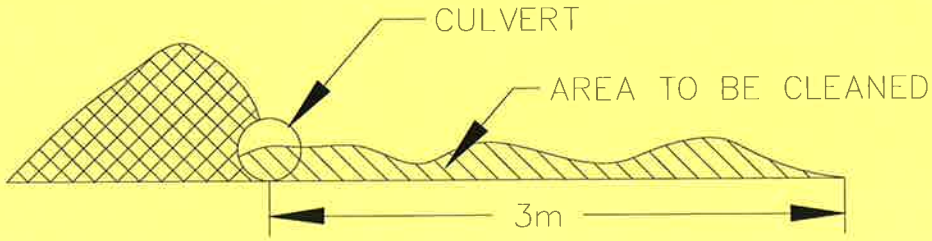

SECTION A – A

TITLE	CLEANING OF DITCH RELIEF CATCH BASIN AND TRANSITION	
DRAWING 834–1	APPROVED	

838 MAINTENANCE FOR HIGH CLEARANCE VEHICLE USE (05/07)

838.01 Description

This work consists of making limited use roads passable for project use by Purchaser and providing drainage from the traveled way and roadbed.

838.02 Maintenance Requirements

A. Traveled Way

Purchaser may smooth or fill existing cross ditches and water bars and as approved by the Contracting Officer modify existing road junctions to enable vehicle access. The Purchaser may perform the following work prior to beginning haul and resumption of haul after an extended stoppage:

1. Remove brush, fallen trees, rocks, and other debris from traveled way, including turnouts, turnarounds, and other locations that interfere with needed maintenance as follows:

a. No object extending over 4 inches above the road surface shall remain within the 12 feet usable traveled way. Center the usable width on the roadbed or position away from the fill slope.

b. Cut and remove standing or down trees, logs, brush, and limbs from within the area described in 1(a). Remove encroaching limbs to a height of 14 feet above the traveled way surface. Scatter material not meeting utilization standards outside and below the roadbed on the fill side. Limb and remove timber that meets utilization standards or deck at locations approved by the Contracting Officer.

c. Place all removed materials away from drainages.

d. During use, maintain drainage structures including dips, ditches and culverts in a usable condition.

2. Clean and recondition drainage facilities in accordance with Section T-831 and T-834.

B. Slough and Slides

1. Slough and slides may be left in place, provided surface drainage is provided and at least 12 feet of width is available for vehicle passage.

2. Purchaser may reposition or ramp over slides and slough when the traveled way width is less than 12 feet providing the material is capable of supporting vehicles. Limit out slope to no more than six percent.

3. Reposition slough or slide materials, which are not capable of supporting a vehicle, on the roadbed to provide the 12 feet width. When directed by the Contracting Officer, slough or slide material will be removed under Section T-832.

C. Slumps and Washouts

1. Drain the roadbed immediately upgrade of slumps and longitudinal cracks to prevent water from entering slump area.

2. Slumps and longitudinal cracks at the edge of the roadbed shall not be considered a part of the usable width. Usable width may be reduced to 10 feet in the area of the slump.

3. Unless the Contracting Officer approves material being placed on slumps, ramp the slumps on both ends into undisturbed roadbed to provide at least 10 feet usable width. Use removed materials to guide vehicles to the ramp location or to aid in draining the area.

4. Washouts may be filled with suitable material.

D. Post haul

At the end of hauling or prior to entering into seasonal shutdowns or a period of extended inactivity:

1. Shape the traveled way and disturbed roadbed to provide functional drainage.

2. Reinstall removed cross ditches and water bars and provide any additional drainage structures necessary to offset changes caused through use and maintenance.

3. Leave roads useable for high clearance vehicles. Remove or reshape purchaser modifications at road junctions to leave the entrance as it was before use, or as agreed at the time of improvement

T-851 LOGGING OUT (5/07)

851.01 Description

This work consists of removal of fallen trees and snags which encroach into the roadway or the 3 feet of roadside abutting the roadway on the cut side.

851.02 Maintenance Requirements

A. Limb and remove timber which meets Utilization Standards, or deck at locations designated by the Contracting Officer.

B. Limb other material cut into lengths for handling. Deck outside ditches and drainages, off the traveled way and turnouts or at staked locations. The clearing width is to the edge of the roadway for public use roads, except limited use roads. The clearing width for limited use roads is shown in the specifications.

C. Notwithstanding B(T)2.3, blowdown timber outside Sale Area required to be removed, which meets Utilization Standards in A(T)2, when designated by the Contracting Officer is Included Timber subject to requirements of B(T)2.2.

D. Do not leave woody debris and slash in excess of 12 inches in length or 3 inches in diameter, or concentrations which may plug ditches or culverts, in ditches, drainage channels, or on backslopes, traveled way, shoulders, or turnouts.

T-854 – TREATMENT AND DISPOSAL OF DANGER TREES (5/07)

854.01 Description

This work consists of felling and disposal of designated live or dead danger trees sufficiently tall to reach roads used by the Purchaser. Any removal of logs is subject to prior agreement between the Contractor Officer and the Purchaser.

854.02 Requirements

A. Designation of danger trees.

Danger trees to be felled will be designated in advance by the Contracting Officer. Trees to be removed will be Marked.

B. Falling, bucking and treatment for disposal.

Use controlled felling to ensure the direction of fall and prevent damage to property, structures, roadway, residual trees, and traffic. Stump heights, measured on the side adjacent to the highest ground, must not exceed 12 inches or 1/3 of the stump diameter, whichever is greater. Higher stump heights are permitted when necessary for safety.

Felled snags and trees, which are not Marked for removal, will be left in a stable condition such that they will not roll or slide. Position logs away from standing trees so they will not roll, are not on top of one another, and are located out of roadway and drainage structures.

Fell, limb and, remove trees, which are Marked for removal, that equal or exceed the utilization standards as listed in the Timber Sale contract or SUPPLEMENTAT SPECIFICATIONS. Dispose of merchantable timber designated for removal in accordance with B/BT2.32 Construction Clearing, of the Timber Sale Contract, or as described in SUPPLEMENTAL SPECIFICATIONS.

C. Slash treatment.

Within the roadway, remove limbs, chunks, and debris in excess of 12 inches in length and 3 inches in diameter, and concentrations that may plug ditches or culverts, and water courses.

Dispose of slash by scattering outside the roadway limits without damaging trees, or improvements.

Large accumulations of slash may be ordered hauled under T-832.

T-891 WATER SUPPLY AND WATERING (5/07)

1.01 Description

This work consists of providing facilities to furnish an adequate water supply, hauling and applying water.

891.02 Materials

If the Purchaser elects to provide water from other than designated sources, the Purchaser is responsible to obtain the right to use the water, including any cost for royalties involved.
Suitable and adequate water sources available for Purchaser's use under this contract are designated as follows:

Map Key No.	Location Road	Location Milepost	Use Restrictions
N/A	**46-482 Beach Day Use**	**N/A Elk Lake**	**N/A**

891.03 Equipment

A. Positive control of water application is required. Equipment shall provide uniform application of water without ponding or washing.

B. An air gap or positive anti-siphon device shall be provided between the water source and the vehicle being loaded if the vehicle has been used for other than water haul, if the source is a domestic potable water supply, or the water is used for tank mixing with any other materials.

C. The designated water sources may require some work prior to their use. Such work may include cleaning ponded areas, installing temporary weirs or sandbags, pipe repair, pump installation, or other items appropriate to the Purchaser's operations. Flowing streams may be temporarily sandbagged or a weir placed to pond water, provided a minimum flow of **N/A** cu. ft/sec is maintained. Obtain approval from the Contracting Officer on improvements for sandbags or weirs prior to placement.

SUPPLEMENTAL SPECIFICATION (2/08)
T-891-01F
WATER SUPPLY AND WATERING

.3 Equipment

Add the following:

D. Watering, juvenile fish protection. All draft hoses being used to withdraw water from any live flowing stream or pond located at various locations in Region Six, the Purchaser shall utilize (1) one of the following methods of screening on any draft hoses used. These roads are listed in C(T)5.31# Road Maintenance Requirements.

(1) Perforated Plate: Screen openings shall not exceed 3/32 or 0.0938-inches (2.38 mm).

(2) Profile Bar Screen: The narrowest dimension in the screen openings shall not exceed 0.0689-inches (1.75-mm).

(3) Woven Wire Screen: Screen openings shall not exceed 3/32 or 0.0938-inches (2.38 mm).

All screening methods shall be cleaned frequently either with wire brushing, flushing, or any other acceptable method.