U.S. DEPARTMENT of AGRICULTURE
FOREST SERVICE
UMPQUA NATIONAL FOREST
COTTAGE GROVE RANGER DISTRICT

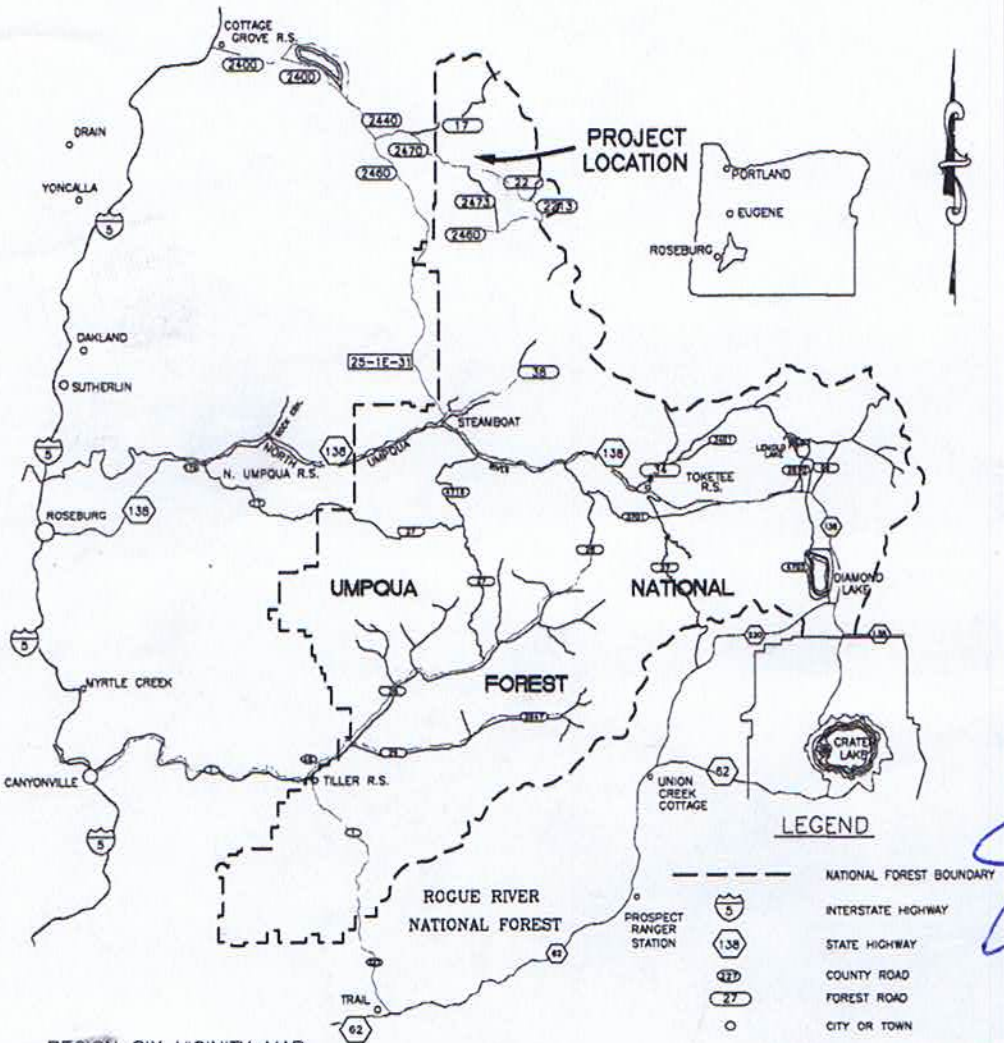

REGION SIX VICINITY MAP

SHEET NO.	SHEET TITLE
1	TITLE SHEET
2	VICINITY MAP
3	ESTIMATE OF QUANTITIES
4	DRAINAGE LIST ROAD 2216
5	DRAINAGE LIST ROAD 2232
6	CULVERT CONSTRUCTION DETAILS
7	LOW WATER FORD
8	ROAD RECONDITIONING/AGGREGATE PLACEMENT/TURNOUT TABLE
9	ROAD RECONSTRUCTION/CROSS-DITCHES
10-12	SITE: ROAD 2216, MP 2.31
13-14	SITE: ROAD 2232, MP 11.31
15-17	SITE: ROAD 2232, MP 11.60
18-19	WORKLIST ROAD 2216
20	WORKLIST ROAD 2232
21	WORKLIST ROADS 2216-732, 2216-733 and 5850-927

PROPOSED PROJECT

ROAD NO.	MILES	TYPE OF WORK
2216	11.34	ROAD RECONSTRUCTION
2216-732	0.80	ROAD RECONSTRUCTION
2216-733	0.50	ROAD RECONSTRUCTION
2232	4.32	ROAD RECONSTRUCTION
5850-927	0.98	ROAD RECONSTRUCTION

RECOMMENDED BY: [signature] DATE: 7/17/13
TRANSPORTATION ENGINEER

APPROVED BY: [signature] DATE: 7/16/13
DISTRICT RANGER

[signature] DATE: 7-16-13
FOREST ENGINEER

DESIGNED BY: Peggy Sue Roberts DATE: 7-17-13
[signature] DATE: 7/18/13
Mike Backhurst DATE: 7/16/13

REVIEWED BY: [signature] DATE: 7/16/13
PROJECT TEAM LEADER/DISTRICT ENGINEER

PARKER WYATT TIMBER SALE

SHT 1 OF 21

COTTAGE GROVE RANGER DISTRICT
LANE COUNTY
VICINITY MAP FOR
PARKER WYATT TIMBER SALE

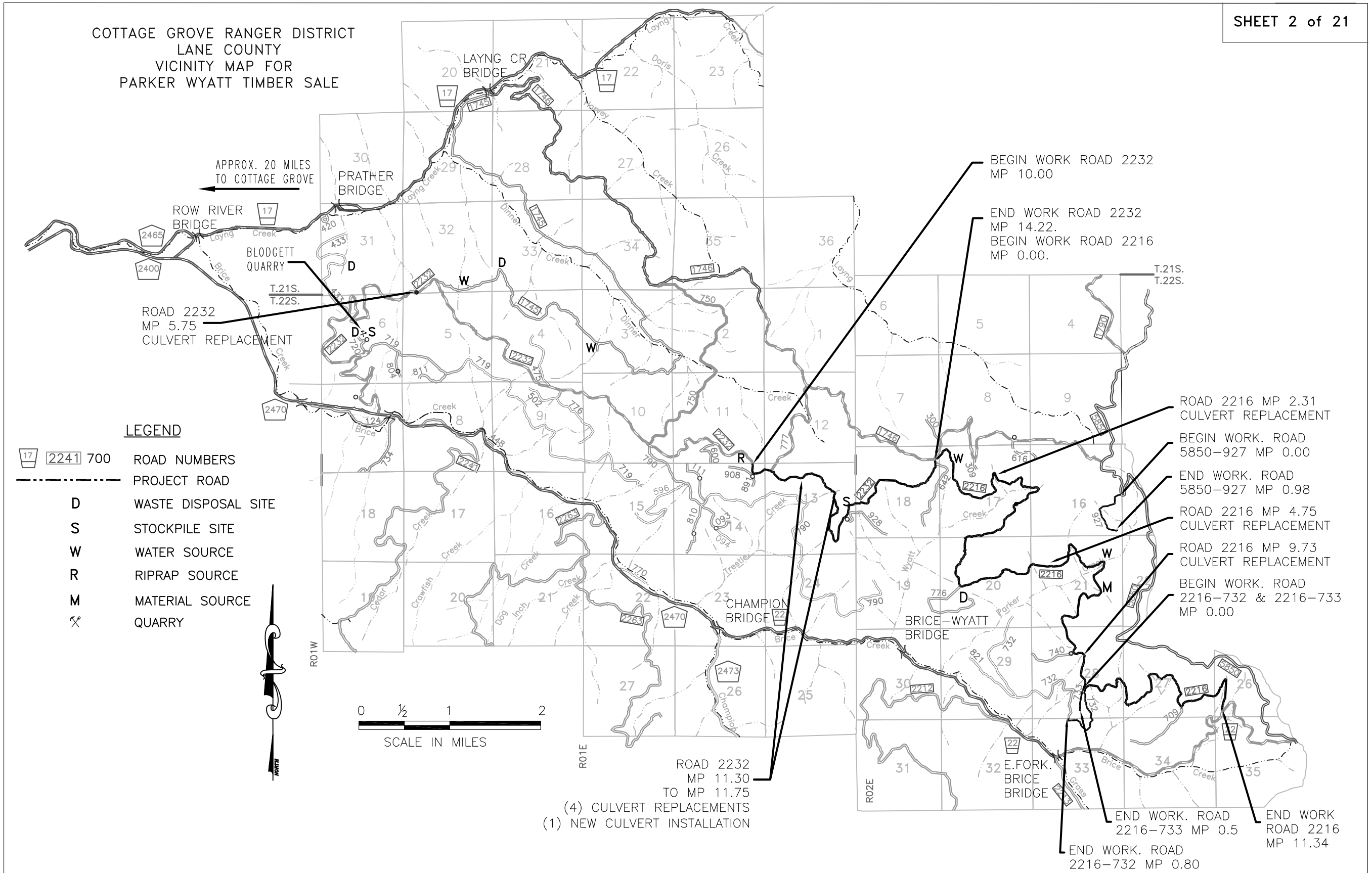

PARKER WYATT TIMBER SALE - ESTIMATE OF QUANTITIES

NOTES:
1. All volume unit pay items are measured in-place. All reference to quantities of excavated volumes refer to original (prior to excavation) volume.

2. See worklists and vicinity map for further description and location of work.

3. Units are measured as Actual Quantities unless denoted by an asterisk *. If denoted by an asterisk (*), the quantity is measured as a contract quantity in accordance with FP-03 109.2.

4. All waste material, woody debris, slash or boulders shall be hauled and placed in disposal area at Blodgett Quarry, or approved disposal sites located on vicnity map.
5. Obtain aggregate, riprap and pitrun from Blodgett Quarry located on Forest Road 2232-720, T 22 S, R 1 E, Sec 6, Stockpile of aggregate located on Forest Road 2232 MP 12.76, T 22 S, R 1 E, Sec 13. Obtain rocky material from Parker Quarry on Road 2216 MP 6.34 and riprap adjacent to Road 2232 MP 10.1
6. Approved water sources are located at Parker Creek on road 2216 at M.P. 5.90, T 22 S, R 2 E, Sec 21 and other approved sources located on vicinity map.

		Road No.	2232	2216	2216-732	2216-733	5850-927		
		Project Length (miles)	4.32	11.34	0.80	0.50	0.98		
		Work Type	Recon.	Recon.	Recon.	Recon.	Recon.		
Pay Item	**Description**	**Unit**	**Pay Item Quantities by Road**					**Total Quantities**	**Remarks**
151-01	Mobilization	L.S.	All Required						Mobilization for all roads.
152-01.1	Construction Survey & Staking, Method 1, Tolerance E	L.S.	1	1				2	Rd. 2216 MP 2.31 & Rd. 2232 MP 11.31 & 11.60
201-05	Clearing & grubbing, disposal of tops & limbs F, logs F, stumps F.	Mile				0.5		0.5	
203-01.1	Removal of metal culvert	Each	5	3				8	Disposal of off Government Land
204-01.1	Roadway Excavation, Compaction Method C	Mile				0.5	0.98	1.48	Construction tolerance class F
204-01.2	Roadway Excavation, Compaction Method B	L.S.	All Required	All Required					Construction tolerance C. Rd. 2216 MP 2.31 & Rd. 2232 MP 11.31 and MP 11.60
204-20.1	Drainage excavation, type Cross-Ditch, Drivable	Each					5	5	Location as staked.
204-20.2	Drainage excavation, type Cross-Ditch, Non-Drivable	Each				5		5	Location as staked.
204-20.4	Drainage excavation, type Low Water Ford	Each			1			1	
204-27	Earth Berm, Type A	Each				1		1	
204-73	Embankment construction, Compaction Method B	C.Y.*	15	140				155	Road 2216 MP 2.31 and Rd. 2232 MP 11.31
230-51	Roadside Brushing	Mile	4.22	11.34	0.80		0.98	17.34	
251-01.1	Placed Riprap, Class 1	C.Y.*			23			23	Low water ford
251-01.2	Placed Riprap, Class 2	C.Y.*	30	2.5	3			35.5	Low water ford
251-01.3	Placed Riprap, Class 3	C.Y.*	17	15				32	
251-01.4	Placed Riprap, Class 4	C.Y.*	8	24				32	
303-57	Roadway Reconditioning, Compaction Method B	Mile	4.22	11.34				15.56	
303-58	Ditch Reconditioning	Mile			0.80			0.8	
322-32	Haul and place stockpiled aggregate. Compaction Method B.	C.Y.*	90	95				185	
602-63.18	18 inch aluminized steel, corrugated steel pipe, .064 inch thickness, Method B	L.F.	84	34				118	
602-63.24	24 inch aluminized steel, corrugated steel pipe, .064 inch thickness, Method B	L.F.	117	63				180	
602-63.36	36 inch aluminized steel, corrugated steel pipe, .064 inch thickness, Method B, Step Beveled inlet.	L.F.	74	80				154	
604-03	Inlet, Beveled Drop	Each	1					1	
606-02.18	Spillway Assembly, 18-inch full circle outlet pipe	L.F.	20					20	Includes anchors for downdrain
606-02.24	Spillway Assembly, 24-inch full circle outlet pipe	L.F.	60					60	Includes anchors for downdrain
606-05.18	Pipe elbow, Standard, 18-inch pipe,	Each	1					1	See FP-03, section 602.03
606-05.24	Pipe elbow, Standard, 24-inch pipe,	Each	2					2	See FP-03, section 602.03
607-18	Re-attach downdrain and anchors, 18-inch pipe	Each		1				1	
607-24	Re-attach downdrain and anchors, 24-inch pipe	Each		1				1	See Sht. 6 for special anchor detail
625-07	Mulching, straw, dry method, hand application	Acre*	0.06	0.1				0.16	Place mulch on all areas of disturbed ground not covered with riprap or aggregate.

PARKER WYATT TIMBER SALE

DRAINAGE LIST

LOCATION AND CULVERT LENGTHS						INSTALLATION DETAILS AND SPECIAL SECTIONS									RIPRAP REQUIREMENTS												
DESIGNED			AS BUILT			CORRUGATED METAL PIPE			SPILLWAYS			BEVELED DROP INLET			HEADWALL			SPLASH APRON			SLOPE PROTECTION			SUBGRADE REINFORCEMENT			
MP	STA (FT)	LENGTH (FT)	MP	STA. (FT)	LENGTH (FT)	DIA (IN)	TH (IN)	TYPE	DOWN-DRAIN LENGTH (FT)	ANCHORS (EA)	ELBOW	DIA (INCH)	LENGTH (FT)	"B" ANGLE	CY	CLASS	TYPE	CY	CLASS	TYPE	CY	CLASS	TYPE	CY	CLASS	TYPE	Remarks
											Road 2216																
1.26																		0.5	2	M							In outlet scour hole
2.31		80				36	0.064	3										4	4	M	20	4	M				Replace CMP. See Sht. 5 for Step Bevel Inlet. See Sht 10-12 for Construction Details
2.73																		10	3	M							In oultet scour hole
3.13																		2	2	M							In oultet scour hole
4.75		63				24	0.064	1										3	3	M							Replace CMP.
9.73		34				18	0.064	1										2	3	M							Replace CMP

NOTES:

1) Culvert lengths are estimated. Verify as staked length prior to ordering culverts. Install culverts as staked.
2) Excavations for new culverts and culvert replacements are generally deeper than existing culvert installations. Excavation of solid rock may be required in some locations.
3) Dimpled bands shall not be used on downpipes, elbows, or pipes laid on grades greater than 15%.
4) Unless shown otherwise, where cover heights exceed 11', culverts shall be cambered an amount equal to 0.5% of the culvert length.
5) Riprap shall be placed to the minimum dimensions shown on typical section drawings.
6) Riprap type abbreviations: D - Dumped, H - Hand Placed, M - Machine Placed.
7) Refer to sheet 5 for typical culvert installation and construction details.
8) Engineer to provide angle for elbows and drop inlet prior to ordering materials.

PARKER WYATT TIMBER SALE

DRAINAGE LIST

LOCATION AND CULVERT LENGTHS						INSTALLATION DETAILS AND SPECIAL SECTIONS									RIPRAP REQUIREMENTS												
DESIGNED			AS BUILT			CORRUGATED METAL PIPE			SPILLWAYS			BEVELED DROP INLET			HEADWALL			SPLASH APRON			SLOPE PROTECTION			SUBGRADE REINFORCEMENT			
MP	STA (FT)	LENGTH (FT)	MP	STA. (FT)	LENGTH (FT)	DIA (IN)	TH (IN)	TYPE	DOWN-DRAIN LENGTH (FT)	ANCHORS (EA)	ELBOW	DIA (INCH)	LENGTH (FT)	"B" ANGLE	CY	CLASS	TYPE	CY	CLASS	TYPE	CY	CLASS	TYPE	CY	CLASS	TYPE	Remarks
											Road 2232																
5.75		48				24	0.064	3										2	3	M							Replace CMP
11.31		42				18	0.064	2	20	4	Std Note 8							2	3	M							Remove Existing CMP. Install new CMP at new staked location. See Sht 13-14 for Construction
11.60		74				36	0.064	1							5	2	H	8	4	M	25	2	M				Replace CMP. See Sht. 5 for Step Bevel Inlet. See Sht 15-17 for Construction details
11.66		42				18	0.064	1										2	3	M							Replace CMP.
11.70		36				24	0.064	2	40	6	Std Note 8							3	3	M							Replace CMP.
11.75		33				24	0.064	2	20	4	Std Note 8	30	bevel	Note 8				3	3	M							New CMP installation
12.97																		3	3	M							In outlet scour hole
13.56																		2	3	M							In outlet scour hole

NOTES:

1) Culvert lengths are estimated. Verify as staked length prior to ordering culverts. Install culverts as staked.
2) Excavations for new culverts and culvert replacements are generally deeper than existing culvert installations. Excavation of solid rock may be required in some locations.
3) Dimpled bands shall not be used on downpipes, elbows, or pipes laid on grades greater than 15%.
4) Unless shown otherwise, where cover heights exceed 11', culverts shall be cambered an amount equal to 0.5% of the culvert length.
5) Riprap shall be placed to the minimum dimensions shown on typical section drawings.
6) Riprap type abbreviations: D - Dumped, H - Hand Placed, M - Machine Placed.
8) Engineer to provide angle for elbows and drop inlet prior to ordering materials.

PROJECT	SHEET	OF
PARKER WYATT TIMBER SALE	6	21

CULVERT CONSTRUCTION DETAILS

DISTANCES IN FEET EXCEPT WHERE NOTED. NOT TO SCALE. ALSO REFER TO WORKLISTS.

TYPE 1

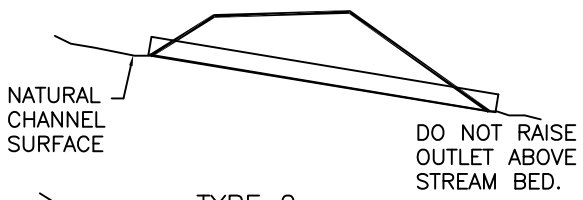

TYPE 2

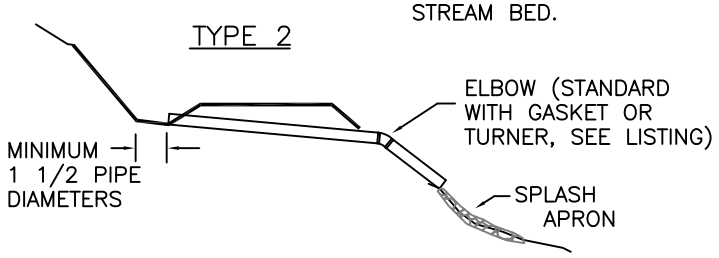

TYPE 3

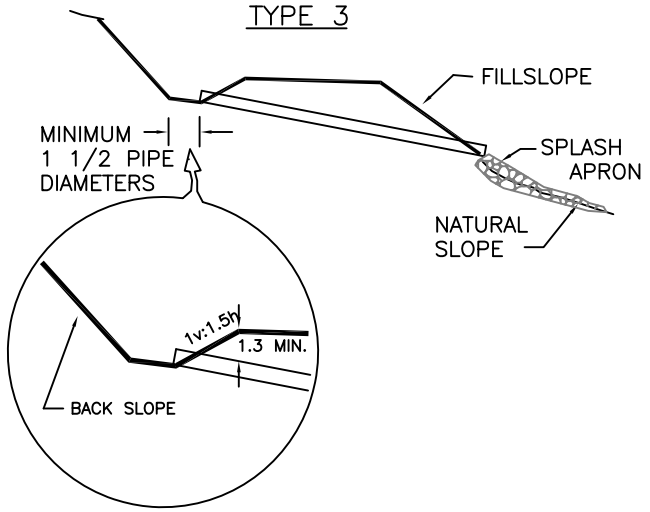

HEADWALLS FOR TYPE 1

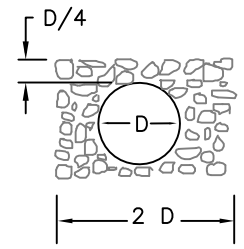

NOTE:
ADJUST RIPRAP TO FIT ORIGINAL STREAM BANKS IN NARROW CHANNELS.

CATCH BASIN DETAIL FOR TYPE 2 & 3

HEADWALL – PLAN VIEW

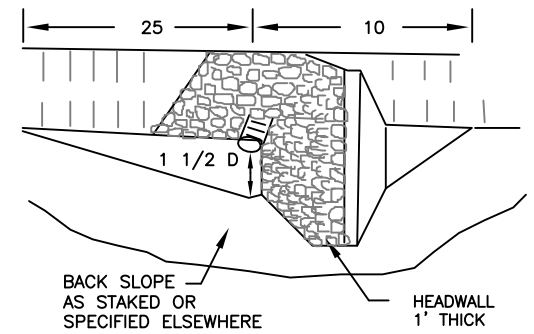

HEADWALL – INLET PROFILE VIEW

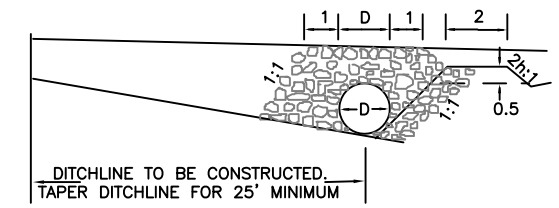

SPLASH APRON

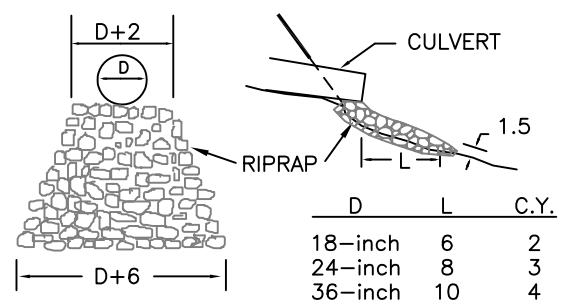

D	L	C.Y.
18–inch	6	2
24–inch	8	3
36–inch	10	4

BEVELED DROP INLET

PLAN VIEW
(SHOWN WITH ANGLE B = 60°)

F.S. ENGINEER TO PROVIDE DIAMETERS AND ANGLE B, PRIOR TO ORDERING.

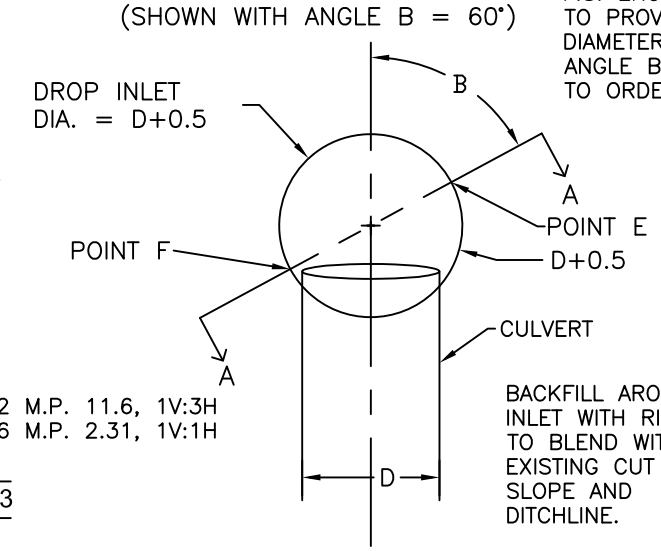

BACKFILL AROUND INLET WITH RIPRAP TO BLEND WITH EXISTING CUT SLOPE AND DITCHLINE.

SECTION A–A
(SHOWN WITH ANGLE B = 0°)

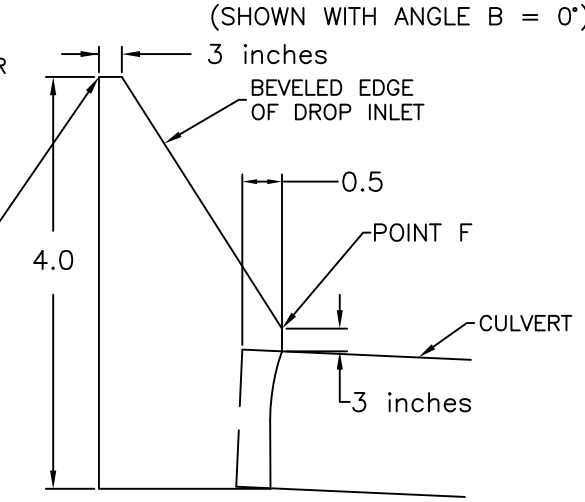

SPECIAL ANCHORING FOR TYPE 2 (DOWNDRAIN)

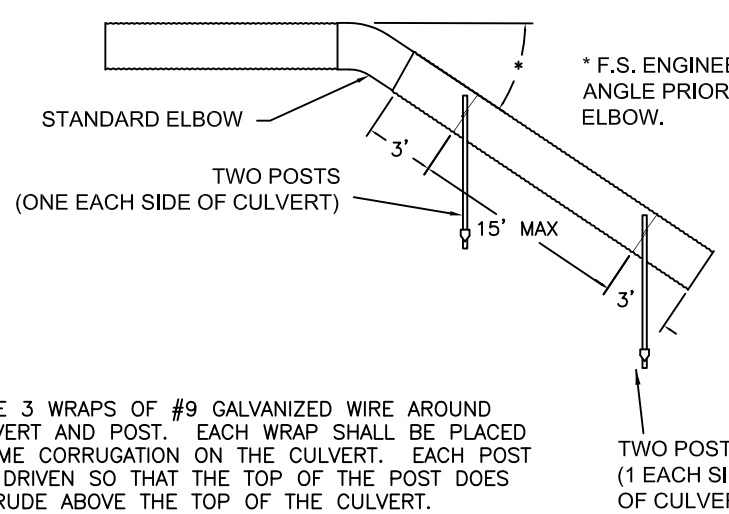

* F.S. ENGINEER TO PROVIDE ANGLE PRIOR TO ORDERING ELBOW.

NOTES:

1) PROVIDE 3 WRAPS OF #9 GALVANIZED WIRE AROUND EACH CULVERT AND POST. EACH WRAP SHALL BE PLACED IN THE SAME CORRUGATION ON THE CULVERT. EACH POST SHALL BE DRIVEN SO THAT THE TOP OF THE POST DOES NOT PROTRUDE ABOVE THE TOP OF THE CULVERT.

2) TWO 6 FT. STUDDED TEE FENCE POSTS, ROLLED HIGH CARBON TOUGH RAIL STEEL, 1 3/8 " x 1 3/8 ", 1.33 LB./SECTION–FT. OR EQUAL, SET AGAINST CULVERT.

3) TWO ANCHOR ASSEMBLIES MINIMUM PER DOWN DRAIN WITH 15 ft MAXIMUM DISTANCE BETWEEN ANCHOR SETS. ADDITIONAL ANCHORS AS REQUIRED TO MAINTAIN 15 FT MAXIMUM SPACING.

4) DOWNDRAIN ANCHORING AT ROAD 2216 MP 2.73 HAS SEPERATE, DETAIL

STEP BEVEL END TREATMENT

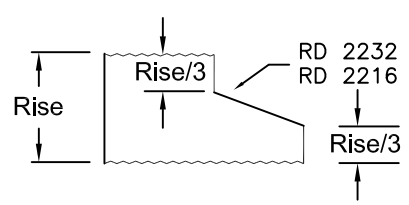

RD 2232 M.P. 11.6, 1V:3H
RD 2216 M.P. 2.31, 1V:1H

REGULAR ELBOW

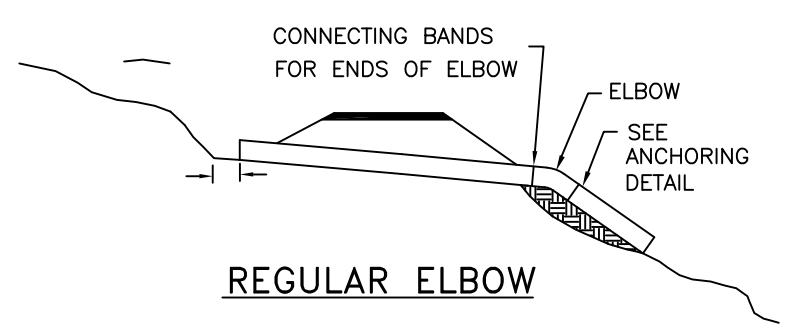

FITTINGS WILL HAVE SUFFICIENT LENGTH FOR ATTACHING A STANDARD CONNECTING BAND.

SPECIAL ANCHORING DETAIL FOR DOWNDRAIN AT ROAD 2216, MP 2.73

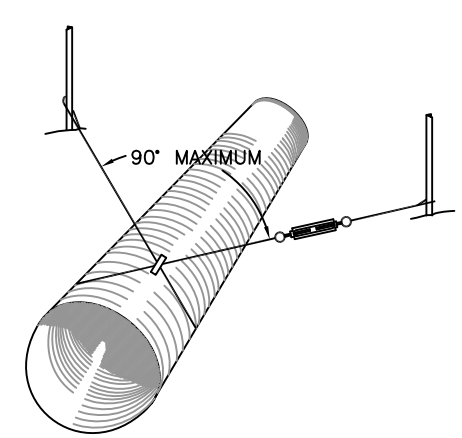

NOTES:

1) PROVIDE 3 WRAPS OF #9 GALVANIZED WIRE AROUND EACH CULVERT AND POST. EACH WRAP SHALL BE PLACED IN THE SAME CORRUGATION ON THE CULVERT.

2) TWO 6 FT. STUDDED TEE FENCE POSTS, ROLLED HIGH CARBON TOUGH RAIL STEEL, 1 3/8 " x 1 3/8 ", 1.33 LB./SECTION–FT. OR EQUAL EACH POST SHALL BE DRIVEN A MINIMUM OF 3 FEET INTO THE GROUND

3) DOWNDRAIN INCLUDES THREE ANCHOR ASSEMBLIES WITH 15 ft MAXIMUM DISTANCE BETWEEN ANCHOR SETS.

4) CABLE CLAMPS AND TURNBUCKLES SHALL BE GALVANIZED STEEL

5) SPECIAL ANCHORING FOR TYPE 2 (DOWNDRAIN) DETAIL MAY BE USED WHERE PRACTICAL

ROAD 2216–732
LOW WATER FORD DETAIL

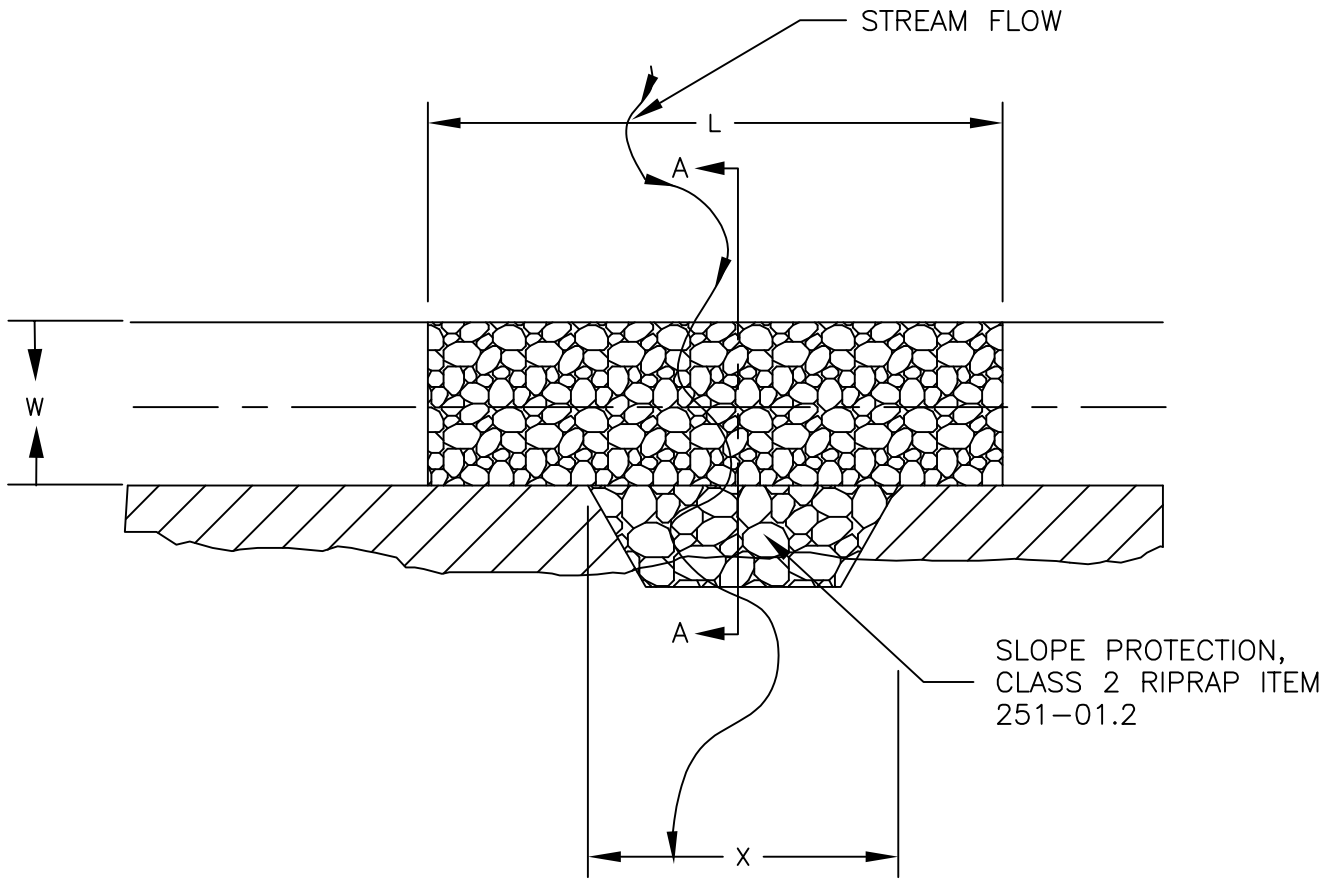

PLAN

	CLASS 1 RIPRAP		CLASS 2 RIPRAP
LOCATION	L	W	X
2216–732 MP 0.64	60'	10'	8'

NOTES:

1) LOW WATER FORD LOCATIONS SHALL BE EXCAVATED 2 FEET DEEPER THAN THE EXISTING GRADE AT THE LOW POINT OF THE FORD CROSSING. THE EXCAVATION SHALL BE 30' EACH SIDE OF THE LOW POINT AND SHALL TAPER FROM THE LOW POINT TO THE EXISTING ROAD SURFACE.

2) EXCAVATED MATERIAL FROM LOW WATER FORD LOCATIONS SHALL BE HAULED TO THE DISPOSAL AREA LOCATED AT THE JUNCTION OF ROADS 2216 AND 2216–776, IN THE SW CORNER. THE SPECIFIC LOCATION FOR THE WASTE STOCKPILE SHALL BE DESIGNATED BY THE ENGINEER. DISPOSE OF MATERIAL IN AREA FLAGGED OR IDENTIFIED BY ER. SPREAD AND SHAPE WASTE TO DRAIN AND TO FIT EXISTING GROUND. FINISH SLOPES ON WASTE NO STEEPER THAN 1.5H:1V. DISPOSAL AND PLACEMENT OF EXCESS MATERIAL IS INDIRECTLY PAID TO ITEM 204–20.

3) FINISHED GRADE AT THE LOW POINT OF THE FORD SHALL BE 1' LOWER THAN THE EXISTING ROAD GRADE. CREATE A SMOOTH TRANSITION FROM DESIGN GRADE AT THE LOW POINT OF THE FORD WITH CLASS 1 RIPRAP TO THE EXISTING ROADWAY ELEVATION AT THE LIMITS OF THE EXCAVATION.

4) OBTAIN CLASS 1 RIPRAP ITEM 251–01.1 AND CLASS 2 RIPRAP ITEM 251–01.2 FROM BLODGETT QUARRY. ROAD 2232–720, M.P. 0.1. SORTING REQUIRED.

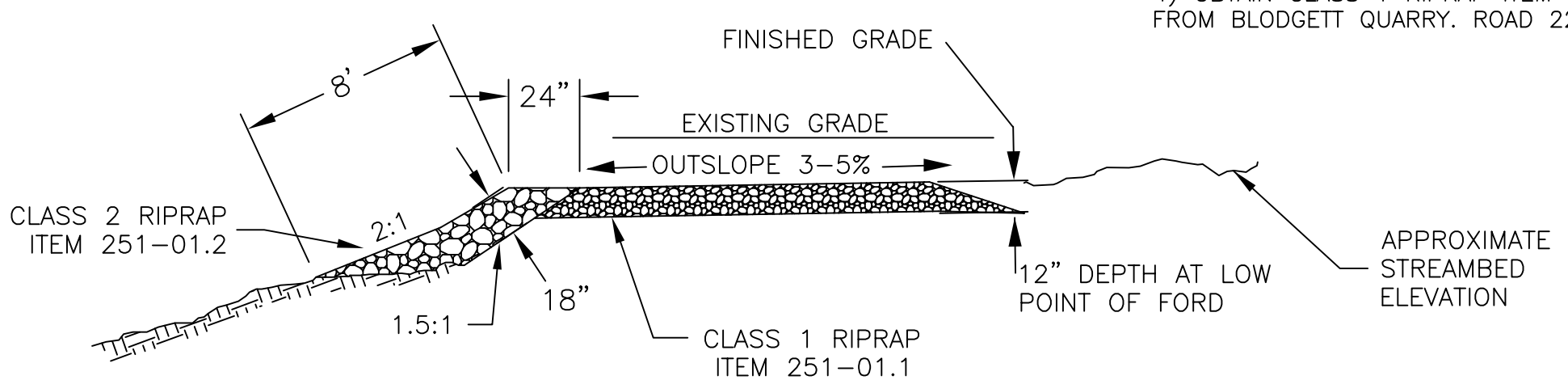

SECTION A–A

PARKER WYATT TIMBER SALE	LOW WATER FORD DETAILS	SHEET 7 OF 21

PROJECT	SHEET	OF
PARKER WYATT TIMBER SALE	8	21

ROADWAY RECONDITIONING, AGGREGATE PLACEMENT TYPICALS, AND TURNOUT TABLES

FSR 2216 Turnout Table - Parker Wyatt TS

ROAD	CENTER OF TURNOUT MILE POST	Left or Right Side of Road	TURNOUT WIDTH	TURNOUT LENGTH	TRANSITION LENGTHS
2216-000	0.24	Right	8'	50'	25'
2216-000	0.52	Right	10'	50'	25'
2216-000	0.62	Right	10'	50'	25'
2216-000	0.73	Right	10'	50'	25'
2216-000	1.07	Right	10'	50'	25'
2216-000	1.16	Right	10'	50'	25'
2216-000	1.33	Right	10'	50'	25'
2216-000	1.62	Right	10'	50'	25'
2216-000	1.84	Right	10'	50'	25'
2216-000	2.00	Right	10'	50'	25'
2216-000	2.06	Left	10'	50'	25'
2216-000	2.17	Right	8'	50'	25'
2216-000	2.26	Left	10'	50'	25'
2216-000	2.38	Right	8'	50'	25'
2216-000	2.43	Right	10'	65'	25'
2216-000	2.53	Right	10'	50'	25'
2216-000	2.65	Right	10'	50'	25'
2216-000	2.70	Right	8'	50'	25'
2216-000	2.88	Right	8'	50'	25'
2216-000	3.10	Right	8'	50'	25'
2216-000	3.18	Right	8'	50'	25'
2216-000	3.34	Right	10'	50'	25'
2216-000	4.11	Right	10'	50'	25'
2216-000	4.21	Right	10'	50'	25'
2216-000	4.41	Right	8'	50'	25'
2216-000	4.57	Right	8'	50'	25'
2216-000	4.61	Right	8'	50'	25'
2216-000	4.81	Right	8'	50'	25'
2216-000	4.91	Right	8'	50'	25'
2216-000	5.00	Right	8'	50'	25'
2216-000	5.11	Right	8'	50'	25'
2216-000	5.15	Right	8'	50'	25'
2216-000	5.33	Right	8'	50'	25'
2216-000	5.36	Right	8'	50'	25'
2216-000	5.63	Right	8'	50'	25'
2216-000	5.77	Right	10'	50'	25'
2216-000	5.91	Right	10'	50'	25'
2216-000	5.98	Right	8'	50'	25'
2216-000	6.12	Right	10'	50'	25'
2216-000	6.27	Right	10'	50'	25'
2216-000	6.36	Right	8'	50'	25'
2216-000	6.43	Right	10'	50'	25'
2216-000	6.50	Right	10'	50'	25'
2216-000	6.60	Right	10'	50'	25'
2216-000	6.80	Right	10'	50'	25'
2216-000	6.93	Right	10'	50'	25'
2216-000	7.06	Right	10'	50'	25'
2216-000	7.11	Right	10'	50'	25'
2216-000	7.33	Right	10'	65'	25'
2216-000	7.40	Right	10'	65'	25'
2216-000	7.54	Right	10'	65'	25'
2216-000	7.60	Right	10'	50'	25'
2216-000	7.64	Right	10'	50'	25'
2216-000	7.78	Left	8'	50'	25'
2216-000	7.88	Right	10'	50'	25'
2216-000	7.95	Right	10'	50'	25'
2216-000	8.02	Right	10'	50'	25'
2216-000	8.13	Right	10'	50'	25'
2216-000	8.27	Right	10'	50'	25'
2216-000	8.35	Right	10'	50'	25'
2216-000	8.43	Right	10'	50'	25'
2216-000	8.63	Right	10'	50'	25'
2216-000	8.70	Right	10'	50'	25'
2216-000	8.76	Right	10'	50'	25'
2216-000	8.89	Right	10'	50'	25'
2216-000	9.07	Right	10'	50'	25'
2216-000	9.23	Right	10'	50'	25'
2216-000	9.28	Right	10'	50'	25'
2216-000	9.33	Right	10'	50'	25'

ROAD RECONDITIONING REQUIREMENTS
PAY ITEM 303–57

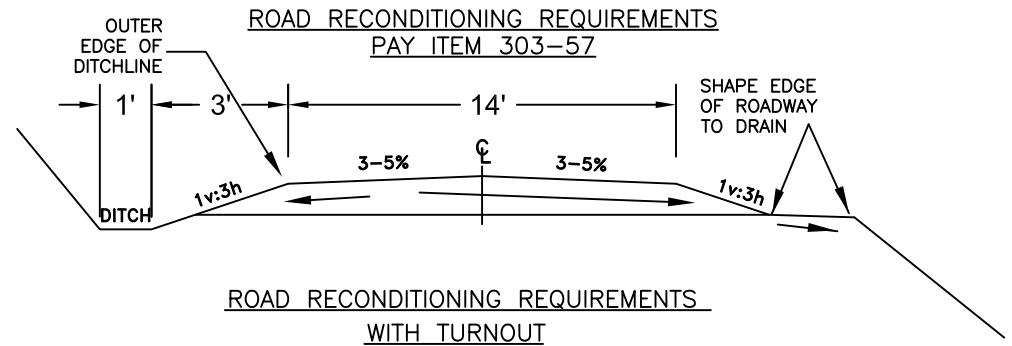

ROAD RECONDITIONING REQUIREMENTS
WITH TURNOUT
PAY ITEM 303–57

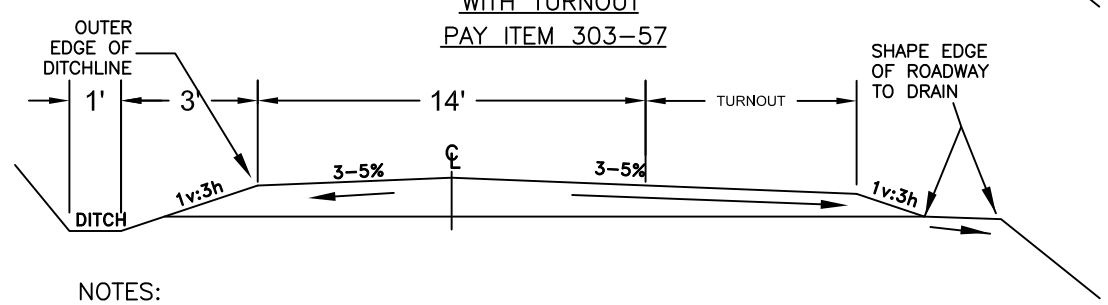

NOTES:
1. RE–ESTABLISH A 14–FT WIDE TRAVELWAY MEASURED FROM THE OUTER EDGE OF DITCHLINE.
2. CROWN RECONDITIONED TRAVELWAY. SLOPE 3–5% AWAY FROM CENTERLINE OF TRAVELWAY.
3. CREATE A 1v:3h SLOPE AT EDGE OF RECONDITIONED TRAVELWAY.
4. SCARIFY IN ACCORDANCE WITH FP–03 303.06.

ROAD CLOSURE BERM

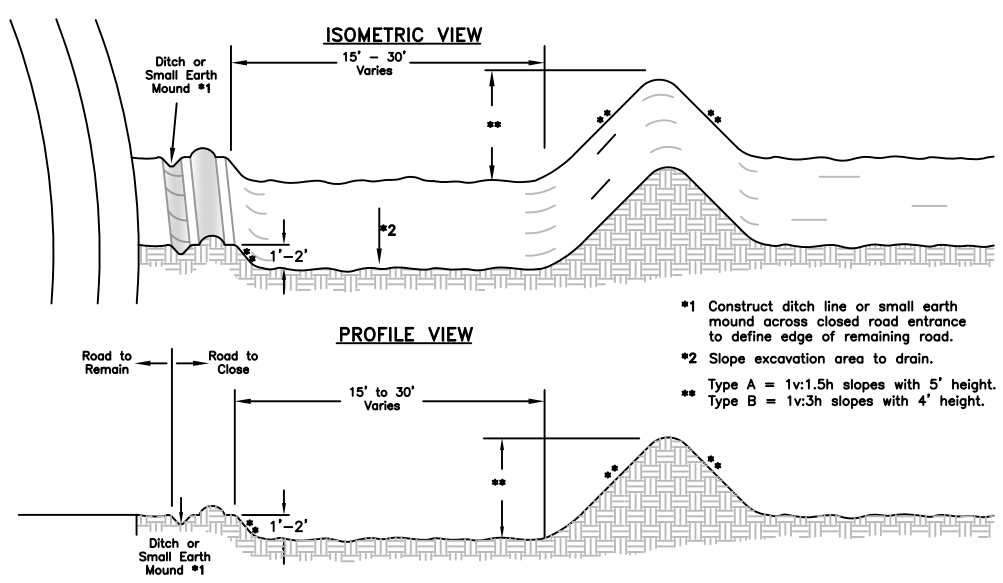

AGGREGATE PLACEMENT CROSS SECTION,
USE OVER NEW AND REPLACED CULVERTS
PAY ITEM 322–32

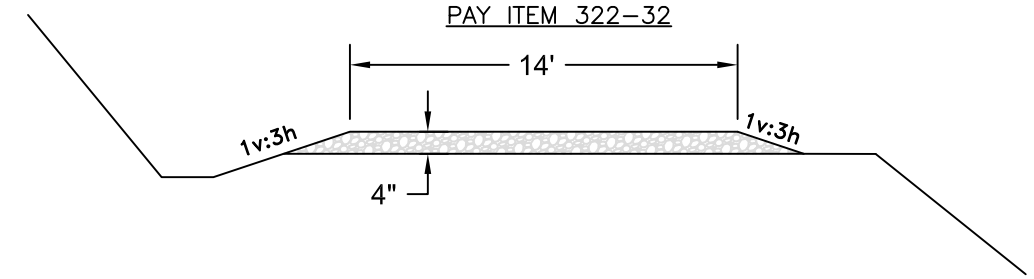

AGGREGATE PLACEMENT CROSS SECTION,
WITH TURNOUT
USE OVER NEW AND REPLACED CULVERTS
PAY ITEM 322–32

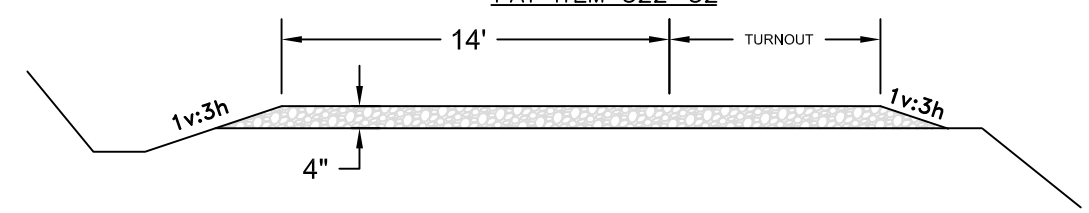

AGGREGATE PLACEMENT
CENTERLINE PROFILE
USE OVER NEW AND REPLACED CULVERTS
PAY ITEM 322–32

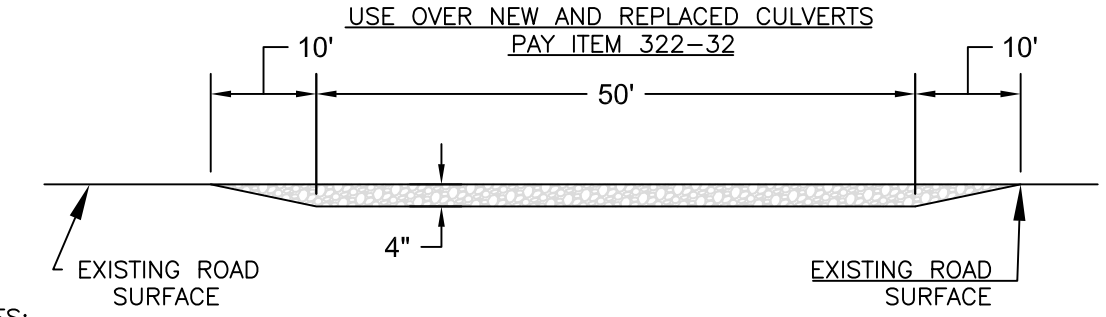

NOTES:
1. THESE TYPICALS APPLY TO ALL AREAS REQUIRING SUPPLEMENTAL AGGREGATE PLACEMENT OVER NEWLY INSTALLED AND REPLACED CULVERTS.
2. REFER TO WORKLIST FOR LOCATIONS. ITEM 322–32 QUANTITIES ARE INTENDED TO SUPPLEMENT EXISTING MATERIALS CONSERVED DURING RECONSTRUCTION.

FSR 2216 Turnout Table - Parker Wyatt TS

ROAD	CENTER OF TURNOUT MILE POST	Left or Right Side of Road	TURNOUT WIDTH	TURNOUT LENGTH	TRANSITION LENGTHS
2216-000	9.36	Right	10'	50'	25'
2216-000	9.43	Right	10'	50'	25'
2216-000	9.57	Right	10'	50'	25'
2216-000	9.69	Right	10'	50'	25'
2216-000	9.96	Right	10'	50'	25'
2216-000	10.04	Right	10'	50'	25'
2216-000	10.10	Right	10'	65'	50'
2216-000	10.25	Right	10'	50'	25'
2216-000	10.30	Right	10'	50'	25'
2216-000	10.40	Right	10'	50'	25'
2216-000	10.55	Right	10'	50'	25'
2216-000	10.59	Right	8'	50'	25'
2216-000	10.70	Right	10'	50'	25'
2216-000	10.82	Right	10'	50'	25'
2216-000	10.88	Right	10'	50'	25'
2216-000	11.04	Right	10'	50'	25'
2216-000	11.18	Right	8'	50'	25'
2216-000	11.27	Right	10'	50'	25'

Parker-Wyatt TS - FSR 2232 Turnout Table

ROAD	CENTER OF TURNOUT MILE POST	Left or Right Side of Road	TURNOUT WIDTH	TURNOUT LENGTH	TRANSITION LENGTHS
2232-000	10.88	Right	10'	50'	25'
2232-000	11.68	Right	10'	50'	25'
2232-000	12.86	Right	10'	50'	25'
2232-000	12.99	Right	10'	50'	25'
2232-000	13.00	Right	10'	65'	25'
2232-000	13.31	Right	10'	50'	15'
2232-000	13.48	Left	10'	50'	25'
2232-000	13.53	Right	10'	50'	25'
2232-000	13.59	Right	10'	50'	25'
2232-000	13.68	Right	10'	50'	25'
2232-000	13.99	Right	10'	50'	25'
2232-000	14.07	Right	10'	50'	25'

ROADWAY EXCAVATION

PROJECT	SHEET	OF
PARKER WYATT TIMBER SALE	9	21

OUTSLOPED CROSS SECTION TYPICAL

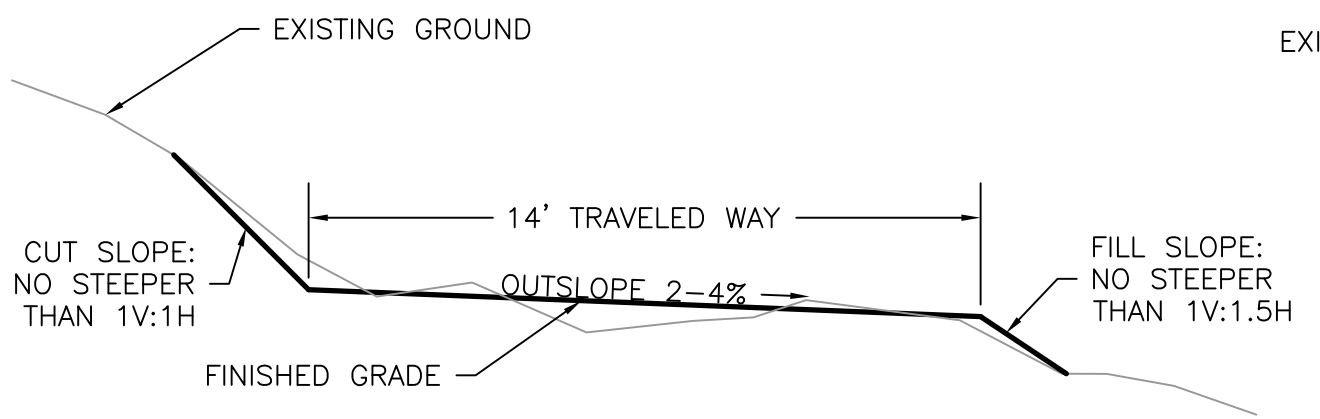

DITCHED CROSS SECTION TYPICAL

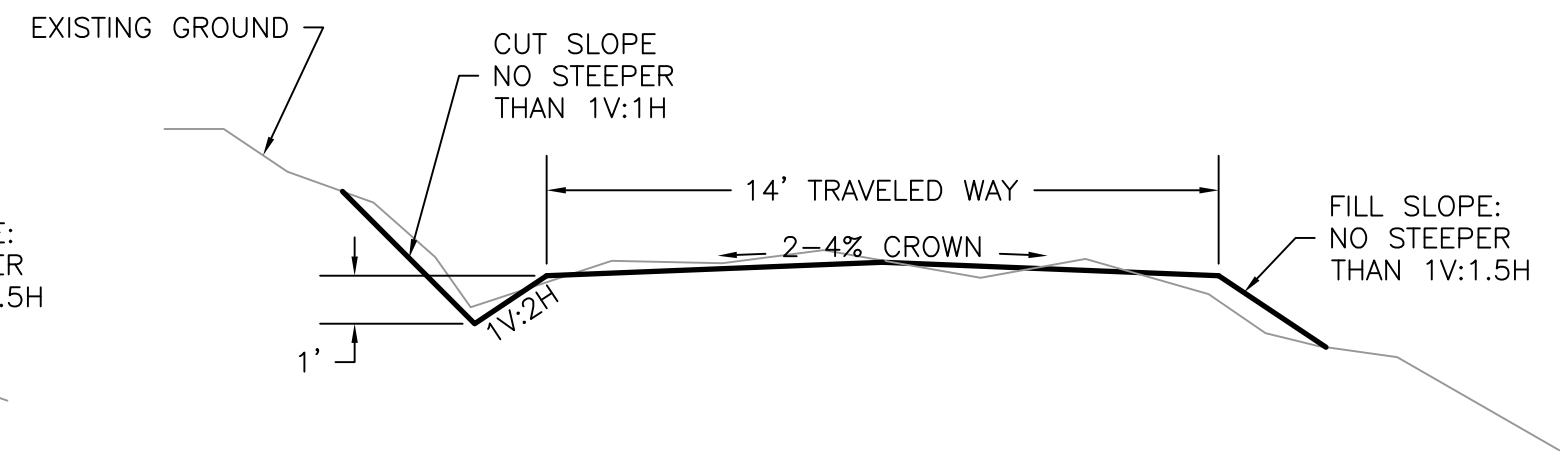

NON-DRIVEABLE CROSS DITCH

TYPICAL CROSS SECTION

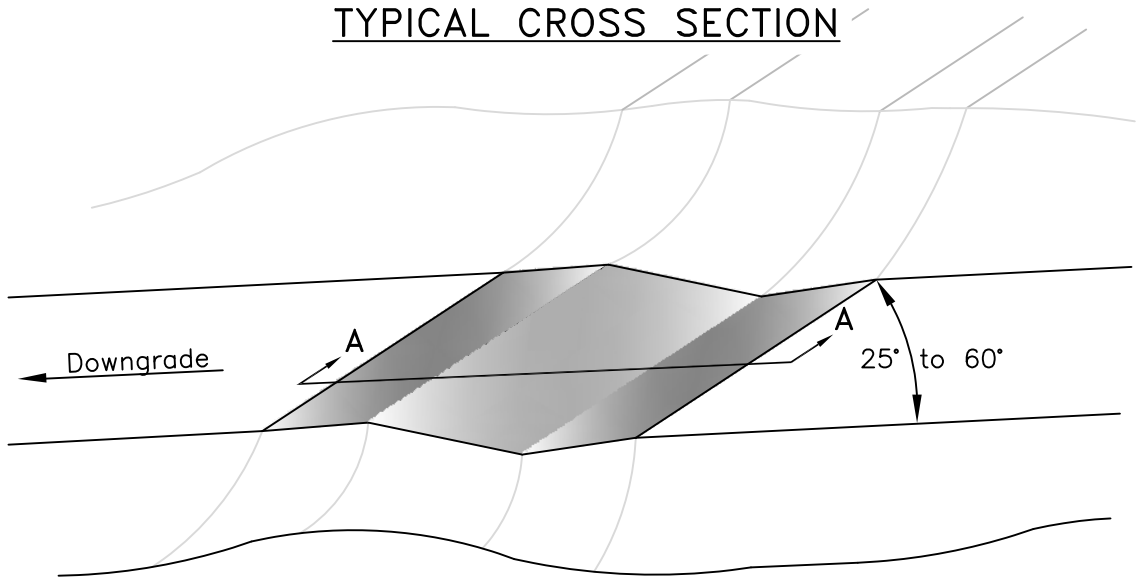

SECTION A–A

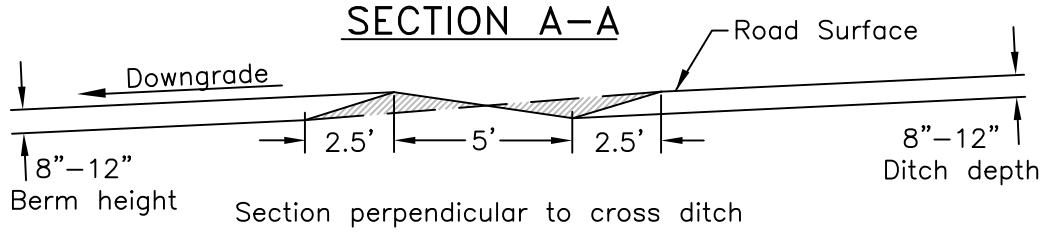

Section perpendicular to cross ditch

NOTE: Berm of excavated material shall cross entire roadbed and ditchline unless otherwise designated in the road worklist.

DRIVEABLE CROSS DITCH

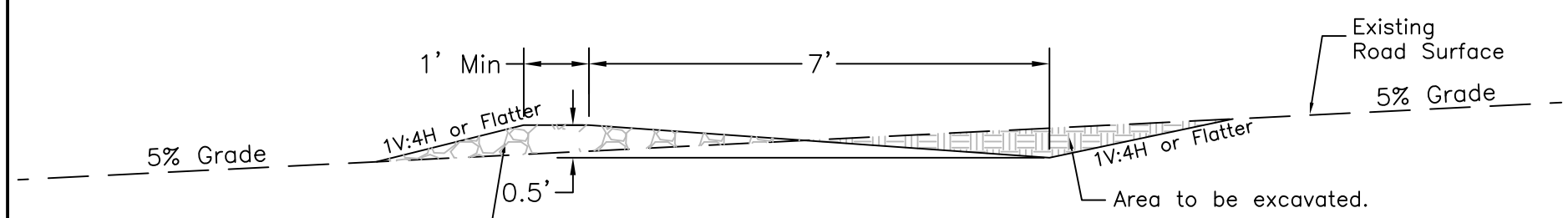

Example: 5% Road Grade
Typical Section Parallel to Road Centerline

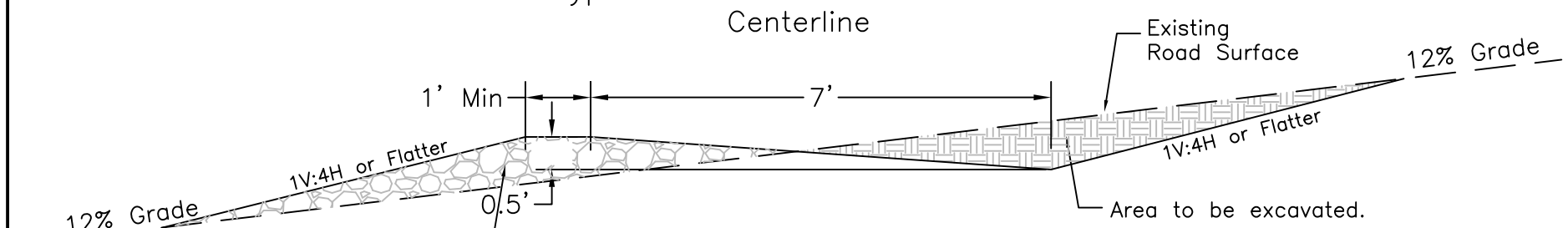

Example: 12% Road Grade
Typical Section Parallel to Road Centerline

Notes:
1. Flowline shall be horizontally skewed 60 degrees from the road centerline, unless otherwise designated in the road listing.
2. Berm of excavated material shall cross entire roadbed and ditchline, unless otherwise designated in the road worklist.

Road 2216 MP 2.31 – Existing Condition

(June 2013 survey)
Distances and elevations in feet.

Description of Work:

Perform survey and staking as needed for control of work. Remove and dispose of existing metal culvert. Excavate for and install new stream crossing culvert. Reconstruct embankment. Haul approximately 140 cubic yards embankment material from designated source. Haul approximately 100 cubic yards of unsuitable material to designated disposal area. Reconstruct subgrade to establish outsloped drain dip with placed riprap for slope protection. Conserve existing aggregate from road bed for use as culvert bedding as needed. Utilize remaining conserved aggregate, along with approximately 85 cubic yards of material hauled from designated stockpile for placement on finished subgrade. Place straw mulch.

Note: Staking and Control: Refer to Control Point Table

Control points 1, 2, and 3 are established on the ground. Control points 4 & 5 will be established on the ground by the Forest Service. Using these points as reference, Contractor shall establish additional control points at P and P' or at other locations on an extension of line P–P' for use in controlling work for installation of the culvert. Contractor shall also establish centerline location staking with offset reference points at the stations listed in the Alignment and Grade Table on sheet 11.

Control Point Table					
Control Point		Coordinates			Remarks
Label	Type	North	East	Elevation	
CP1	3/8" rod & cap	7957.42	4971.98	4001.03	
CP2	3/8" rod & cap	8000.00	5000.00	4000.00	
CP3	3/8" rod & cap	8041.22	5059.35	4001.56	
CP4	3/8" rod & cap				FS establish
CP5	3/8" rod & cap				FS establish
P		7970.60	5036.30		Contractor establish
P'		8044.10	4947.50		Contractor establish

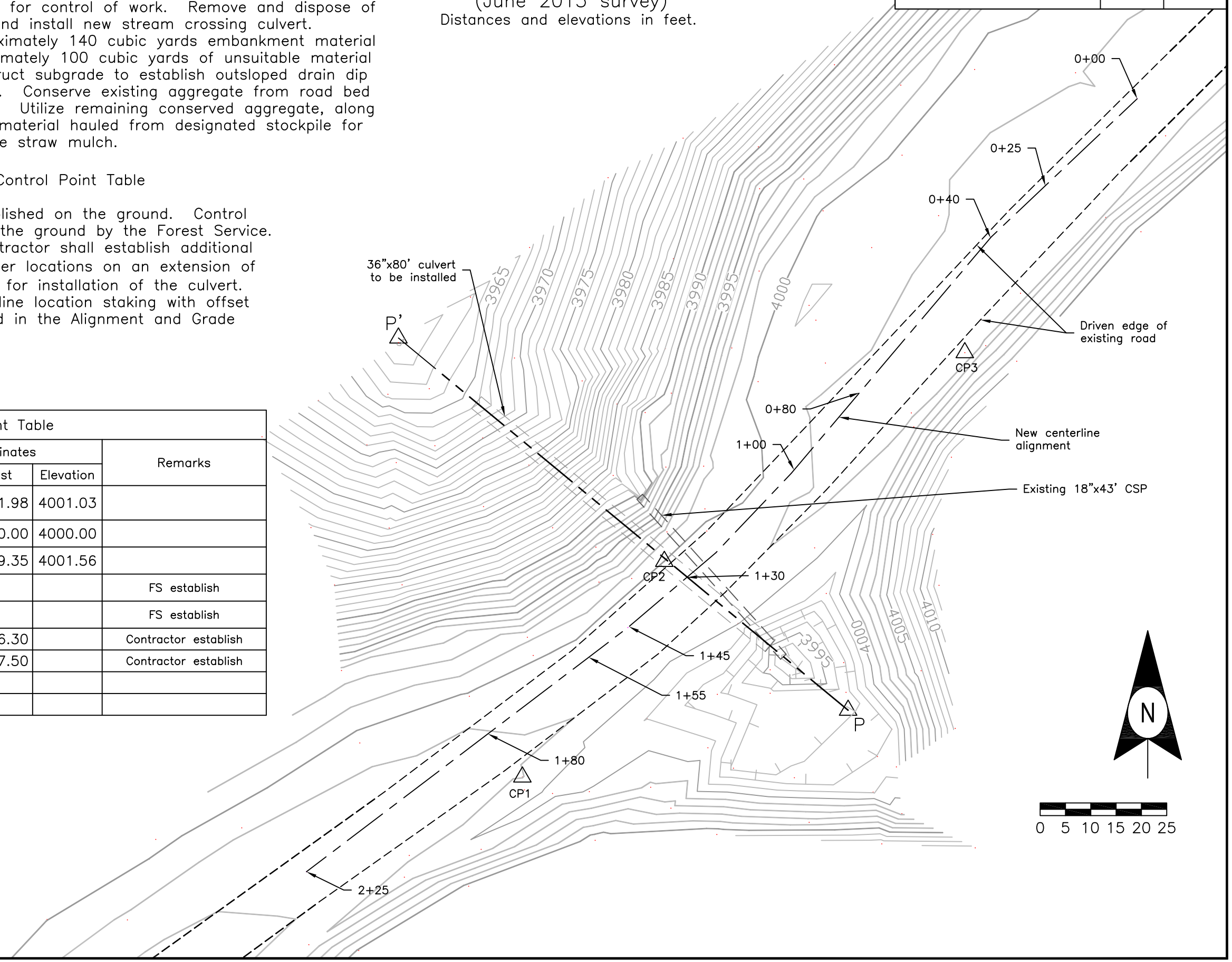

PARKER WYATT TIMBER SALE ROADS	SHEET 11	OF 21

Road 2216 MP 2.31
Site Plan After Completion

Distances and elevations in feet.

Alignment and Grade Table											
Station	CL Coordinates		Subgrade Elevation	Left			Right			Ditch Left?	Remarks
	North	East		Lsub	Lsurf	Slope	Rsub	Ragg	Slope		
0+00	8091.4	5093.4	4000.8	8.7	7.0	−4%	18.7	17.0	−4%	Yes	
0+25	8074.2	5075.2	4000.9	8.7	7.0	−4%	18.7	17.0	−4%	Yes	
0+40	8063.8	5064.4	4001.0	14.0	15.0	0%	18.7	17.0	0%	No	Drain dip crest
0+80	8033.3	5038.5	3999.4	24.0	25.0	4%	29.0	17.0	−4%	No	Drain dip bottom
1+00	8018.0	5025.6	3999.6	16.0	17.0	1%	18.3	17.0	−4%	No	
1+30	7996.8	5004.5	4000.0	8.7	7.0	−4%	8.7	7.0	−4%	No	
1+45	7987.1	4993.0	4000.2	10.0	7.0	−4%	8.7	7.0	−4%	No	
1+55	7981.1	4985.1	4000.3	8.7	7.0	−4%	8.7	7.0	−4%	Yes	
1+80	7965.9	4965.2	4000.6	8.7	7.0	−4%	8.7	7.0	−4%	Yes	
2+25	7938.7	4929.3	4001.3	8.7	7.0	−4%	8.7	7.0	−4%	Yes	

Note – Subsurface Conditions:

No subsurface investigations have been conducted. Excavation for the culvert foundation is likely to encounter large boulders. Presence of bedrock is uncertain. Substantial quantities of material unsuitable for backfill or embankment may be encountered, such as logs, muck, or excessively wet and non–draining material.

Note – Clearing and Unsuitable Excavaton:

Clearing and grubbing of existing surfaces is required, indirectly paid by Item 602–63.36. Timber meeting utilization standards shall be bucked and decked at locations designated on the ground. Other cleared trees larger than 4–inches D.B.H. shall be conserved and placed on finished slopes. Other material shall be hauled and incorporated with excavated material placed in the designated disposal area. Excavation unsuitable or excess for use as backfill or embankment shall be hauled and placed in the designated disposal area.

Note – Material Storage:

Material excavated for culvert installation may be temporarily stored on the roadway, in the ditch line and against cut slopes along the road on either side of the project area. Storage areas shall have aggregate removed prior to placing stored materials, and aggregate shall be replaced afterwards, placed and compacted in accordance with and indirectly paid by 322–32. Place straw mulch on all disturbed surfaces other than the roadbed.

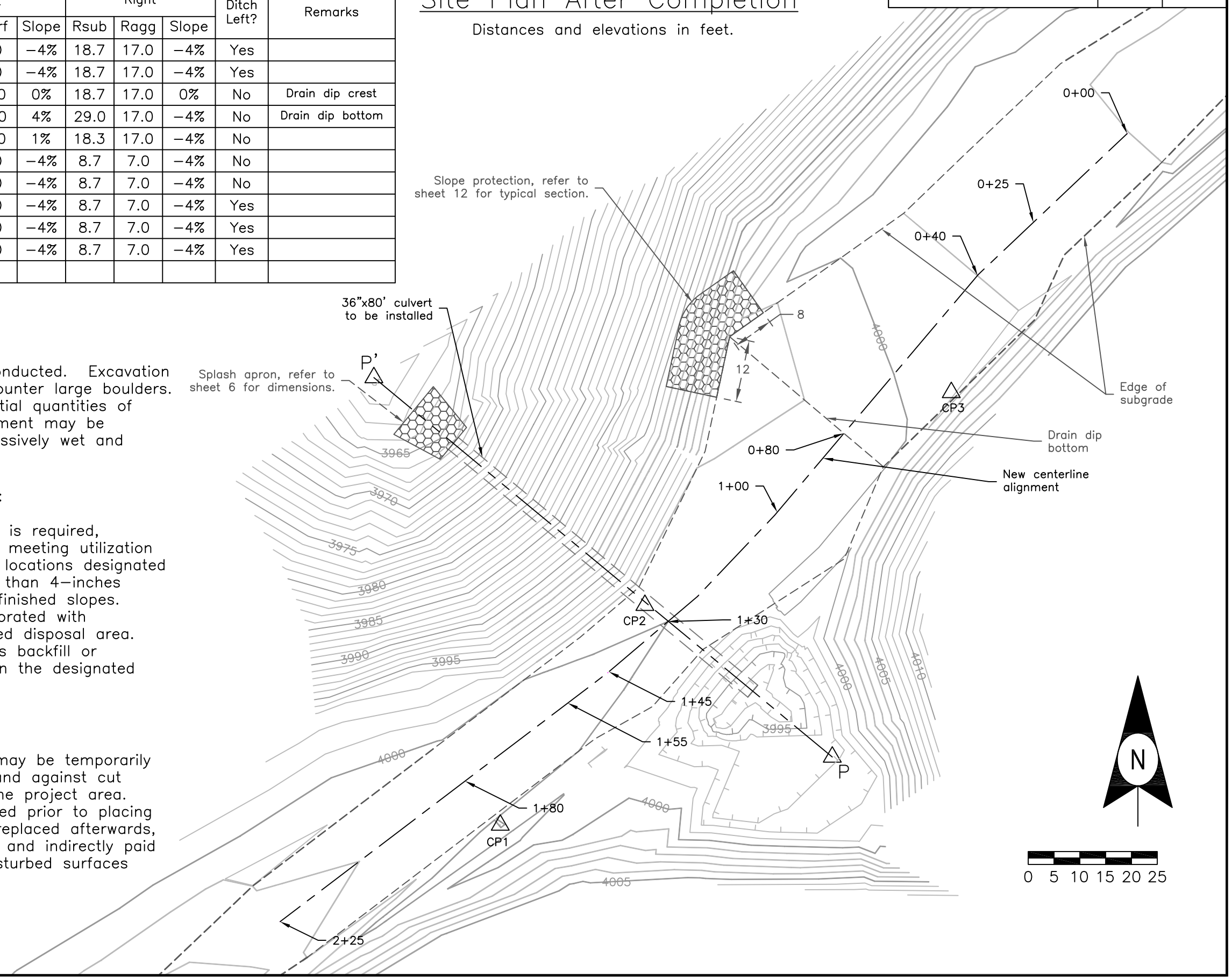

Road 2216 MP 2.31 – Typical Sections

PARKER WYATT TIMBER SALE ROADS	SHEET 12	OF 21

Note – Water Diversion and Dewatering:

Temporary water diversion facilities of sufficient capacity and strength to carry the entire stream flow shall be used. Dewatering may be necessary to facilitate foundation excavation, bedding, and backfilling. A written plan for diversion and dewatering shall be submitted by the Contractor and accepted by the Engineer prior to start of excavation. Diversion is required from the time stream flow is disrupted by operations and until culvert installation and backfill is complete. All diversion and dewatering work is indirectly paid by Item 602–63.36.

Note – Excavation Limits:

The excavation as designed is an estimate of the area needed (without shoring or bracing) for safe and adequate installation of the culvert, backfilling, compaction, and placing embedment within the culvert. Lesser extents of excavaton may suffice. Any additional excavation for equipment access will be confined to the limits of the existing roadway. Excavated areas created for access shall be backfilled and compacted in accordance with Sections 204.10 and 204.11. All culvert excavation and related work for access is indirectly paid by Item 602–63.36.

Follow Occupational Safety and Health Administration (OSHA) safety regulations (29 CFR, part 1926, subpart P, Excavation), or OSHA–approved State Plan requirements for sloping the sides of excavations and for using shoring, bracing, and other safety features. Should actual ground conditions require a change for safety reasons, the change shall be approved in writing by the CO, and the contract modified as appropriate.

Distances and elevations in feet.

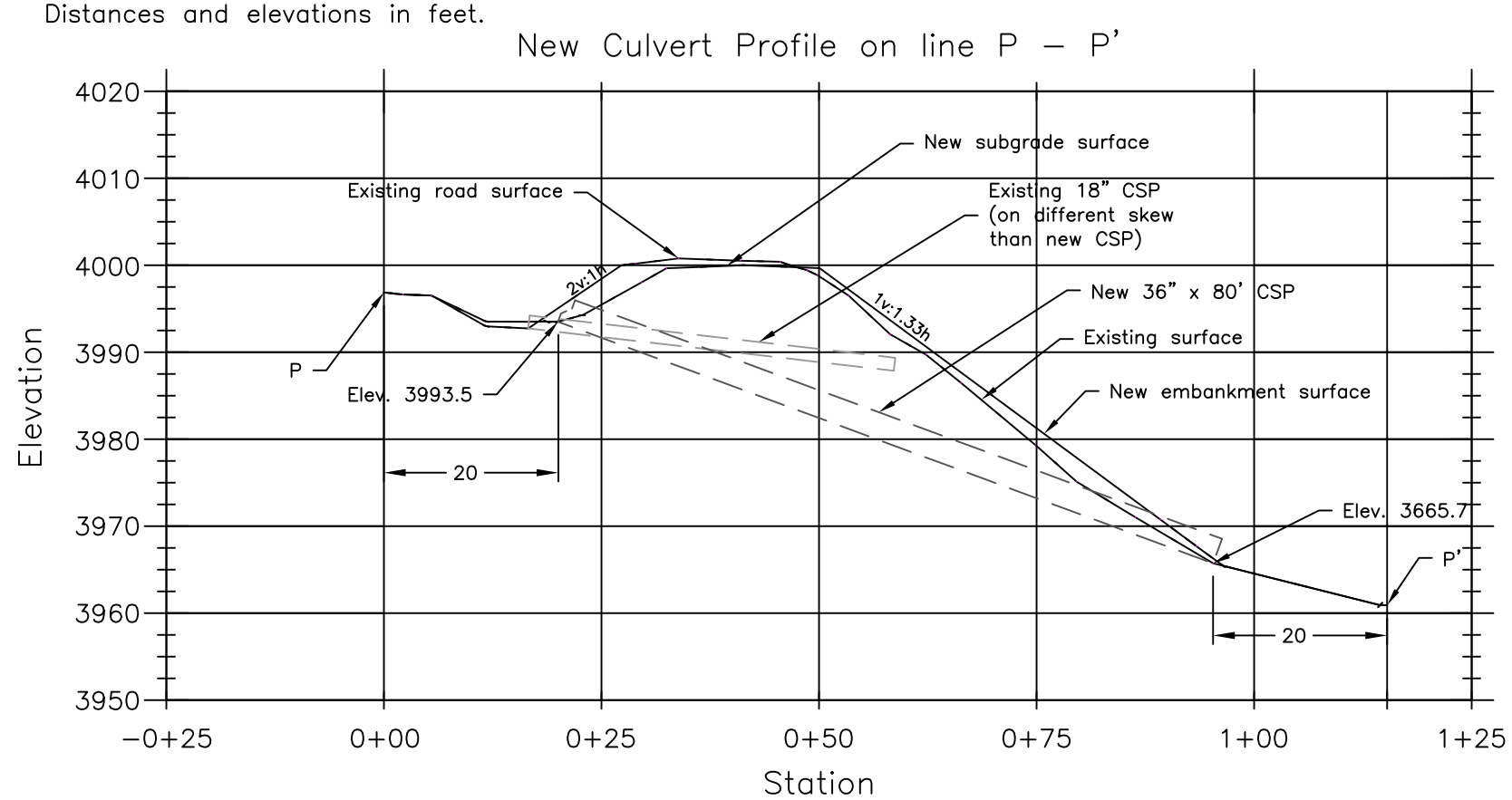

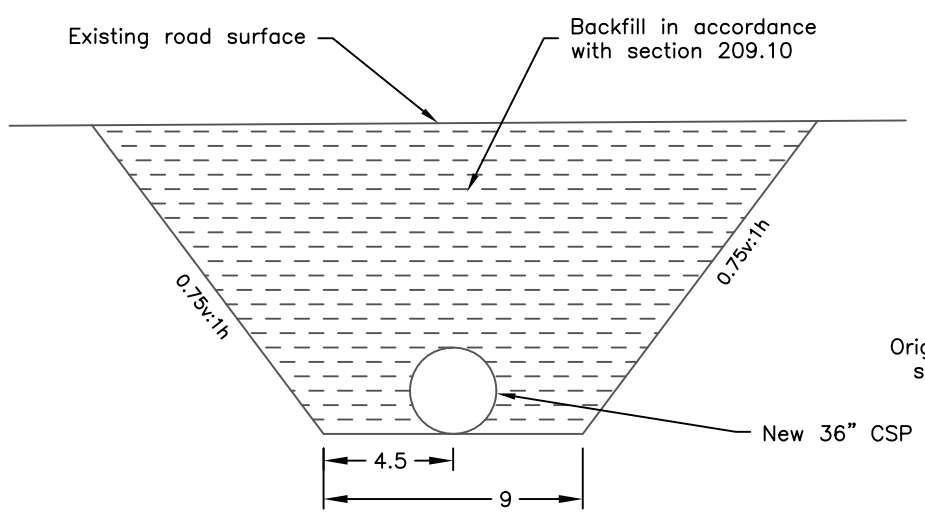

Typical Culvert Excavation Section

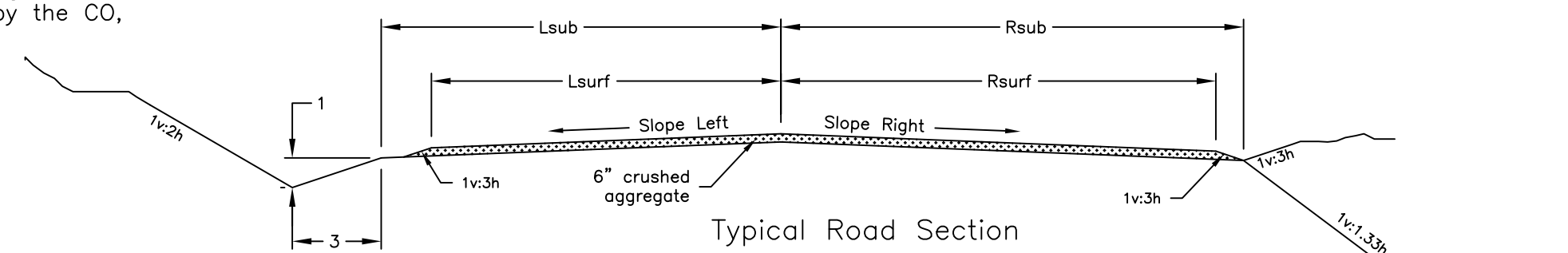

Typical Road Section

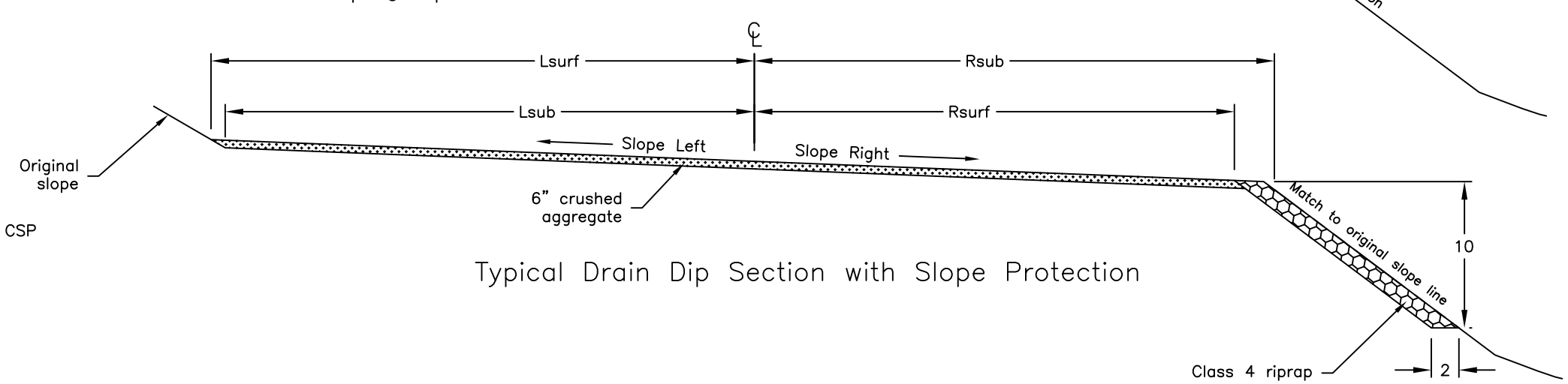

Typical Drain Dip Section with Slope Protection

Road 2232 M.P. 11.31
Parker Wyatt Timber Sale

Umpqua National Forest
Cottage Grove Ranger District

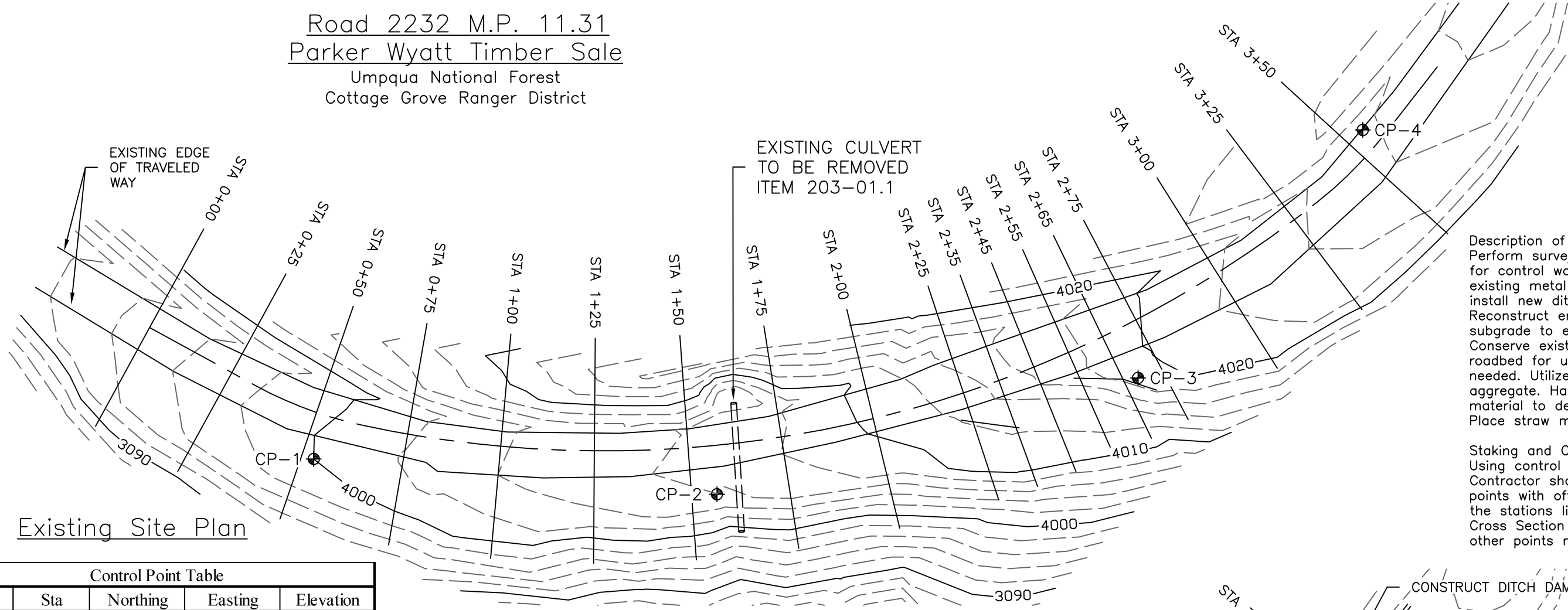

Existing Site Plan

Description of Work:
Perform survey and staking as needed for control work. Remove and dispose of existing metal culvert. Excavate for and install new ditch relief culvert. Reconstruct embankment. Reconstruct subgrade to establish crowned road. Conserve existing aggregate from roadbed for use as culvert bedding as needed. Utilize remaining conserved aggregate. Haul unsuitable and excess material to designated disposal area. Place straw mulch.

Staking and Control Notes:
Using control points as reference, Contractor shall establish centerline points with offset reference points at the stations listed on the Profile and Cross Section Typicals page, and any other points needed for control of work.

Control Point Table				
Label	Sta	Northing	Easting	Elevation
CP 1	0+53	8000.00	5000.00	4000.00
Cp 2	1+56	7990.60	5107.48	4005.99
CP 3	2+69	8021.60	5219.73	4019.00
CP 4	3+55	8087.71	5279.61	4025.64

10' Contours

2' Contours

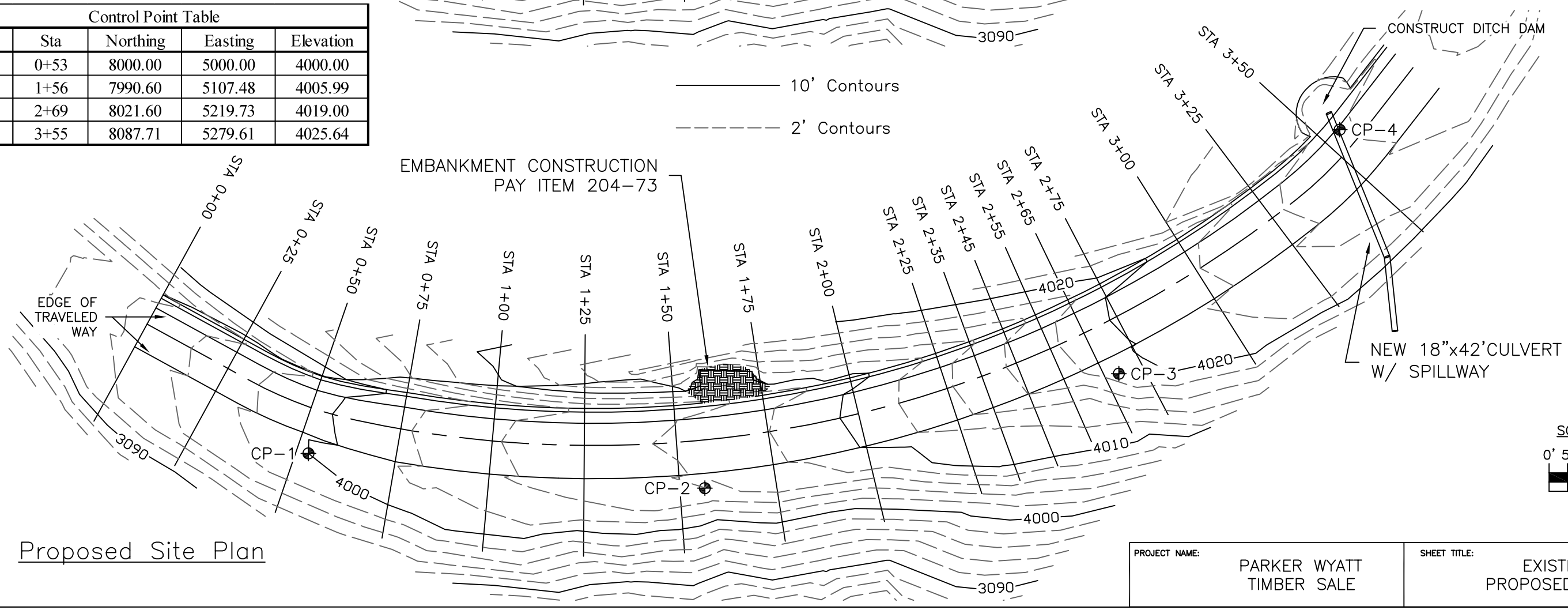

Proposed Site Plan

SCALE 1"=30'
0' 5' 10' 20' 30'

PROJECT NAME:	SHEET TITLE:	SHT. 13
PARKER WYATT TIMBER SALE	EXISTING AND PROPOSED PLAN VIEW	OF 21

CROSS SECTION TYPICAL
STA 0+00 TO 1+85

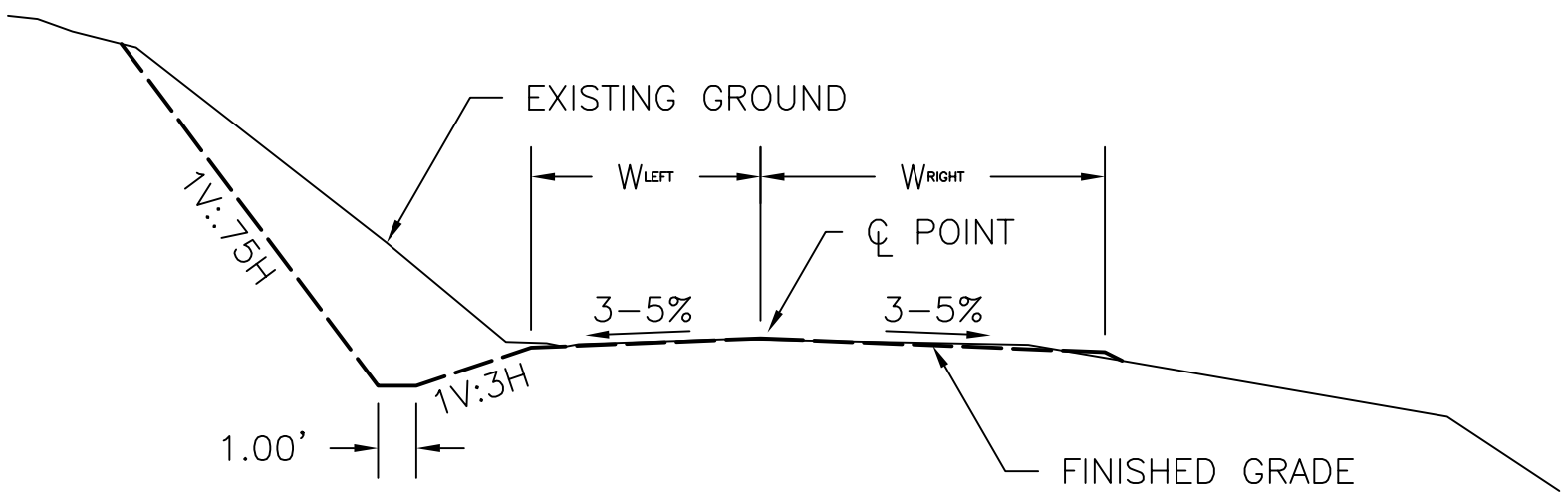

CROSS SECTION TYPICAL
STA 2+00 TO 2+55

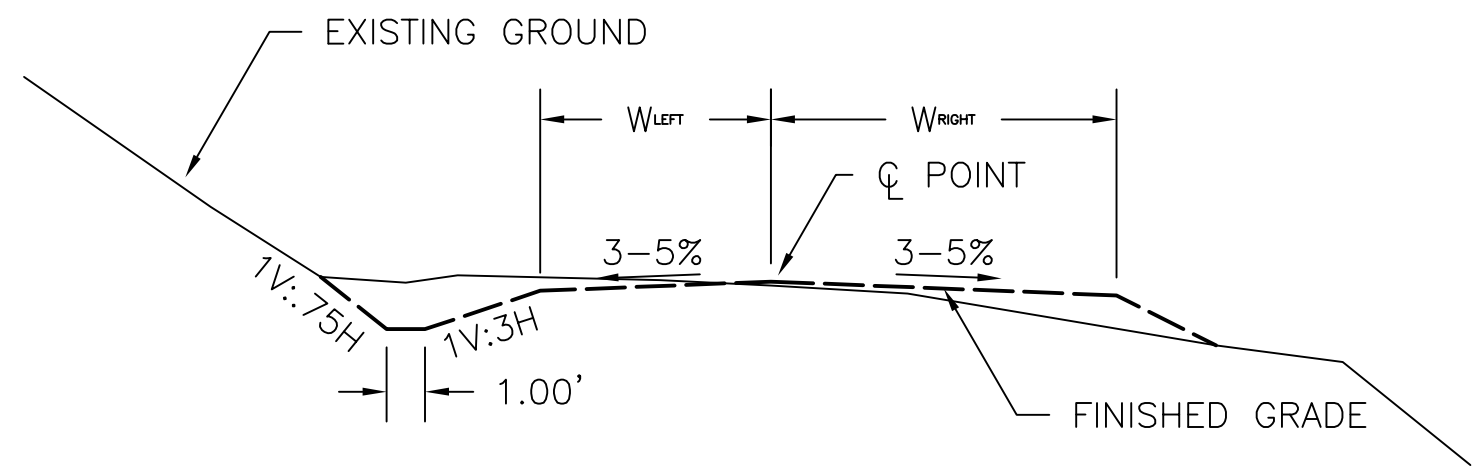

CROSS SECTION TYPICAL
STA 2+60 TO 3+75

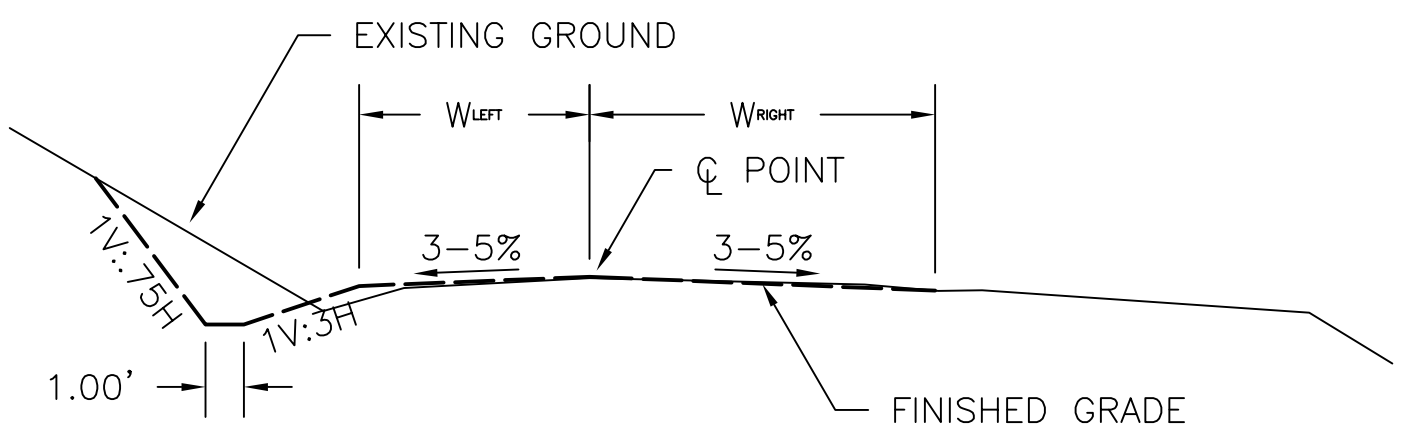

Finished Grade Centerline & Road Width Information						
STA	Northing	Easting	Elevation	Description	W_{LEFT}	W_{RIGHT}
0+00	8035.04	4956.27	3994.69	Centerline	5.00	7.00
0+25	8023.02	4978.18	3997.10	Centerline	5.00	7.00
0+50	8012.38	5000.77	3999.44	Centerline	5.00	7.00
0+53	8000.00	5000.00	4000.00	CP 1	--	--
0+75	8006.64	5025.07	4001.75	Centerline	6.00	9.00
1+00	8003.39	5049.85	4003.83	Centerline	6.00	9.00
1+25	8002.17	5074.81	4005.55	Centerline	6.00	9.00
1+50	8002.99	5099.79	4006.20	Centerline	6.00	9.00
1+56	7990.60	5107.48	4005.99	CP 2	--	--
1+75	8005.85	5124.62	4007.96	Centerline	6.00	9.00
2+00	8010.73	5149.13	4010.53	Centerline	6.00	9.00
2+25	8017.59	5173.17	4013.78	Centerline	6.00	9.00
2+35	8020.88	5182.61	4015.08	Centerline	6.00	9.00
2+45	8024.48	5191.94	4016.38	Centerline	6.00	9.00
2+55	8028.38	5201.15	4017.68	Centerline	6.00	9.00
2+65	8032.57	5210.22	4018.98	Centerline	6.00	9.00
2+69	8021.60	5219.73	4019.00	CP 3	--	--
2+75	8037.07	5219.16	4020.28	Centerline	6.00	9.00
3+00	8049.55	5240.81	4021.91	Centerline	6.00	9.00
3+25	8063.77	5261.36	4023.74	Centerline	6.00	9.00
3+50	8080.25	5280.10	4025.52	Centerline	6.00	9.00
3+55	8087.71	5279.61	4025.64	CP 4	--	--

PROJECT NAME:	SHEET TITLE:	
PARKER WYATT TIMBER SALE	CROWNED ROAD CROSS SECTION TYPICALS	SHT. 14 OF 21

Road 2232 M.P. 11.6
Parker Wyatt Timber Sale

Umpqua National Forest
Cottage Grove Ranger District

Existing Site Plan

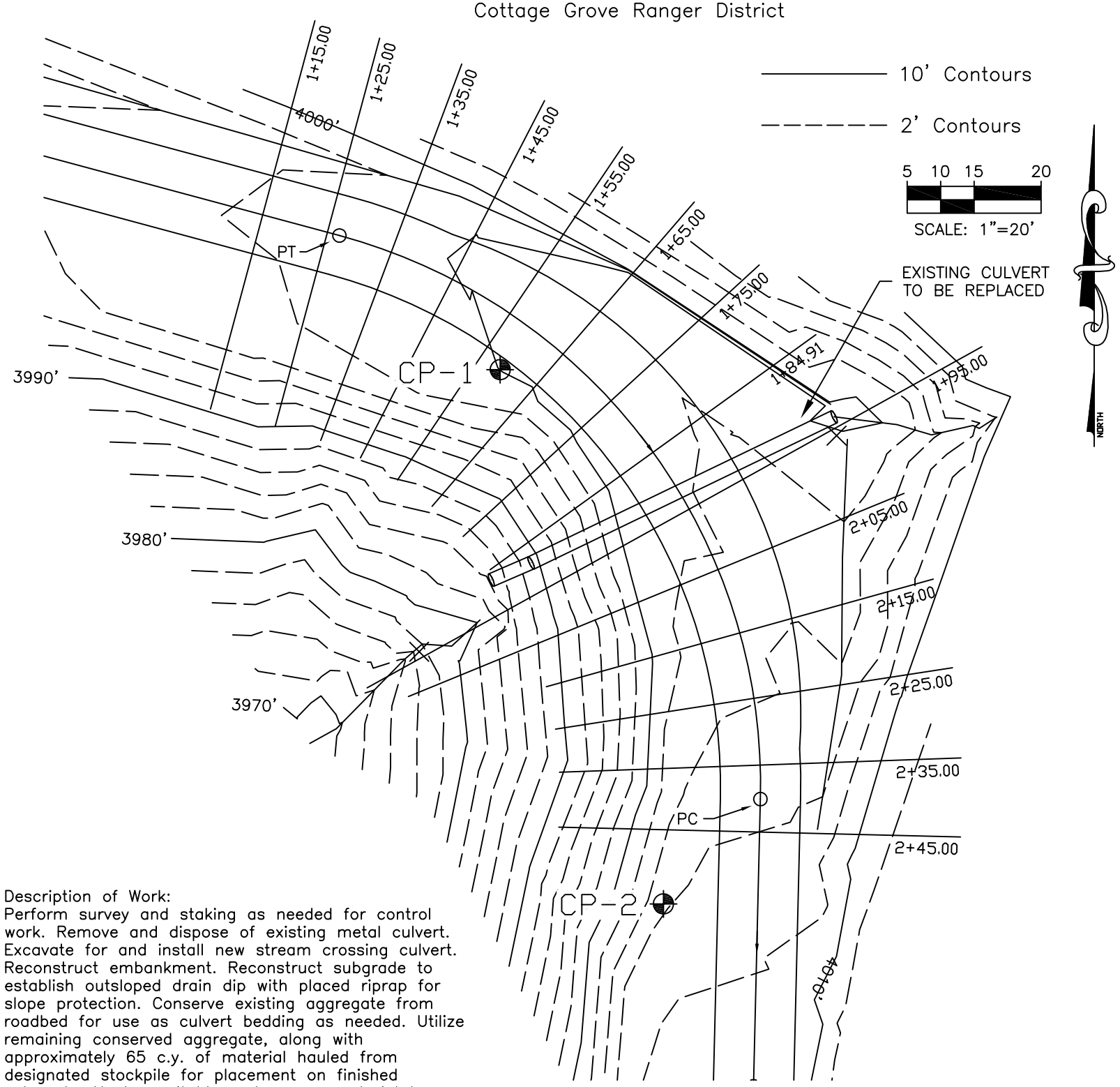

Proposed Site Plan

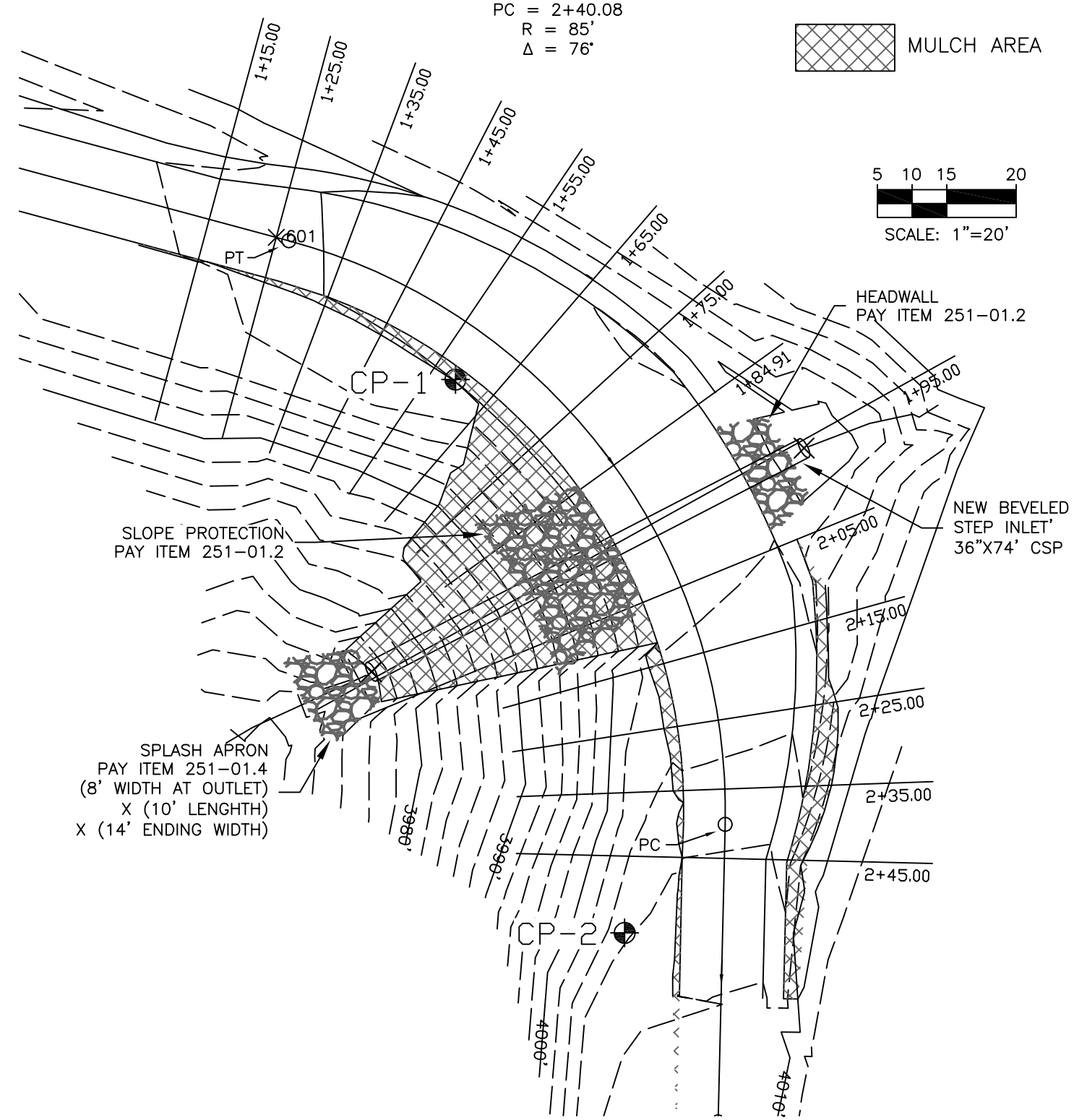

Description of Work:
Perform survey and staking as needed for control work. Remove and dispose of existing metal culvert. Excavate for and install new stream crossing culvert. Reconstruct embankment. Reconstruct subgrade to establish outsloped drain dip with placed riprap for slope protection. Conserve existing aggregate from roadbed for use as culvert bedding as needed. Utilize remaining conserved aggregate, along with approximately 65 c.y. of material hauled from designated stockpile for placement on finished subgrade. Haul unsuitable and excess material to designated disposal area. Place straw mulch.

Staking and Control Notes:
Control points 1 and 2 are established on the ground. Control points 3 and 4 will be established on the ground by the F.S. Using these points as reference, Contractor shall establish centerline points with offset reference points at the stations listed on the Profile and Cross Section Typicals page, and any other points needed for control of work.

CONTROL POINT TABLE

LABEL	STA	NORTHING	EASTING	ELEVATION	DESCRIPTION
CP 1	1+59	8000.00'	5000.00'	4000.02'	
CP 2	2+56	7920.25'	5024.38'	4005.81'	
CP 3					FS ESTABLISH
CP 4					FS ESTABLISH

PROJECT NAME:	SHEET TITLE:	SHT.
PARKER WYATT TIMBER SALE	EXISTING AND PROPOSED PLAN VIEW	15 OF 21

ROAD SAG PROFILE

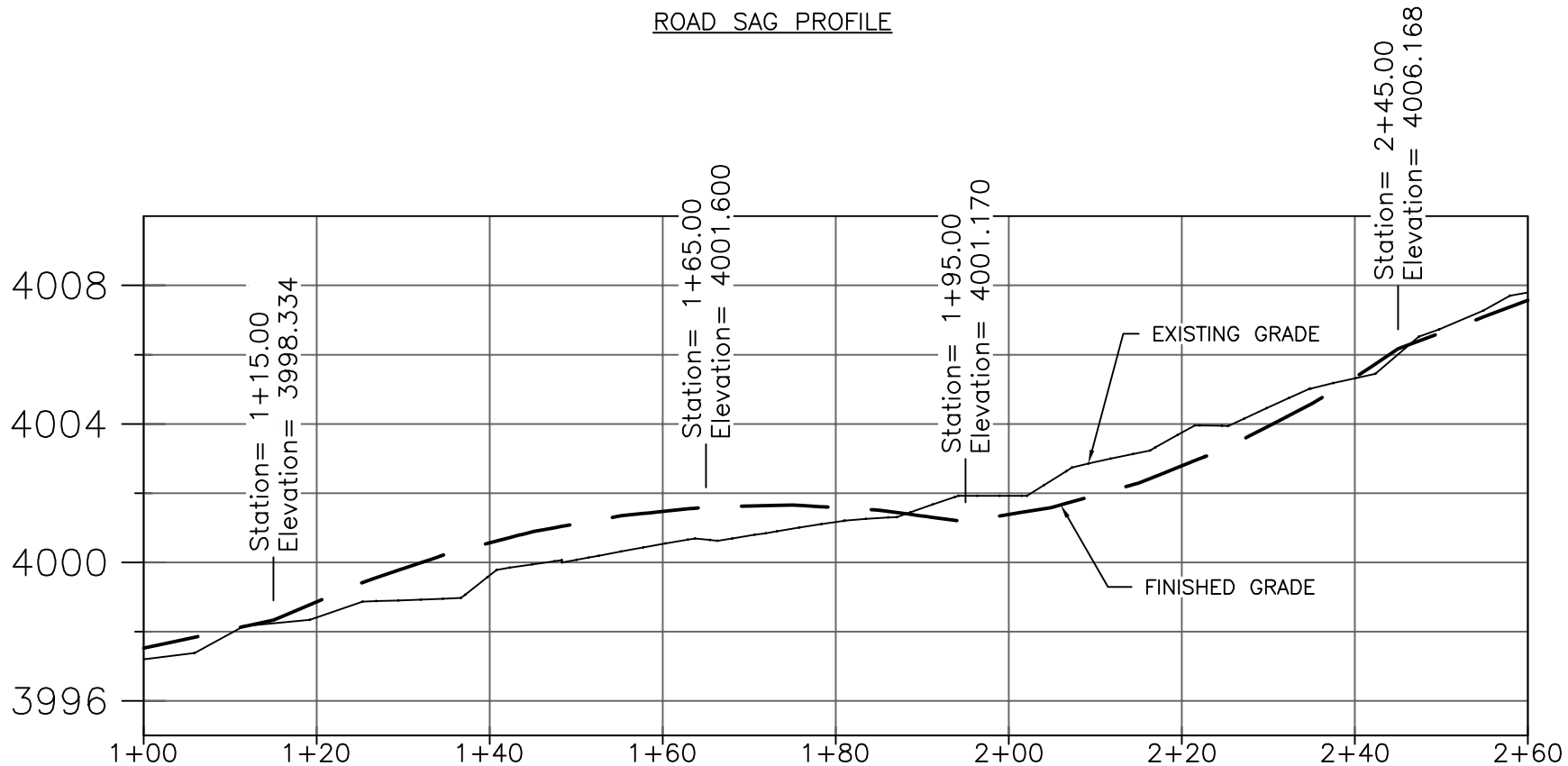

CROSS SECTION TYPICAL
STA 1+15 TO 1+85

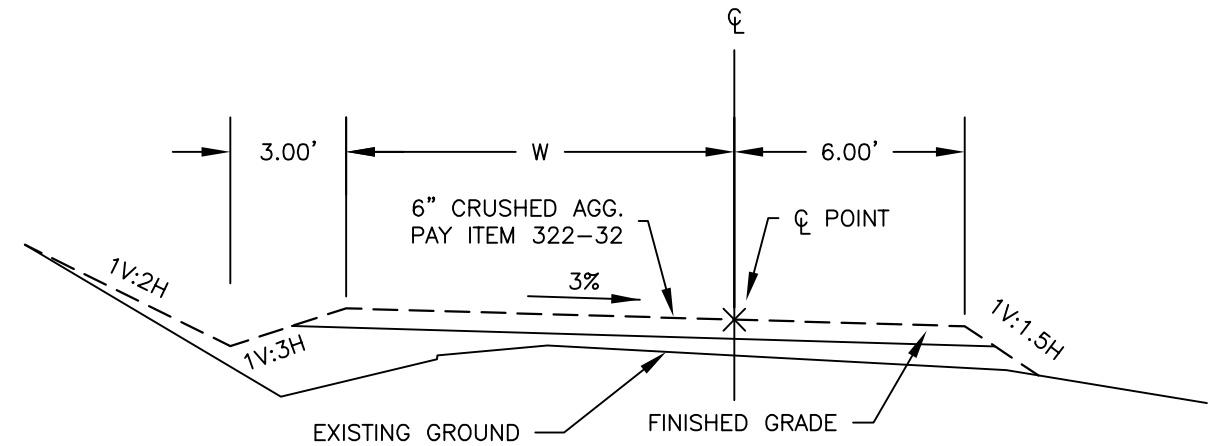

STA	NORTHING	EASTING	ELEVATION	DESCRIPTION	W
1+15	8023.10'	4964.52'	3998.33'	Begining Grade Sag	6.00'
1+25	8020.50'	4974.18'	3999.39'	Centerline	7.38'
1+27	8020.02'	4975.98'	3999.56'	PC of 85' Rad. Curve	7.62'
1+35	8017.53'	4983.72'	4000.24'	Centerline	8.73'
1+45	8013.48'	4992.86'	4000.89'	Centerline	10.11'
1+55	8008.39'	5001.45'	4001.34'	Centerline	11.49'
1+59	8000.00'	5000.00'	4000.02'	Control Point 1	--
1+65	8002.32'	5009.39'	4001.60'	Crest of Grade Sag	12.87'
1+75	7995.36'	5016.57'	4001.66'	Centerline	14.28'
1+85	7987.60'	5022.87'	4001.51'	Begin Slope Protection	15.00'
1+93	7957.89'	4987.88'	3974.71'	Outlet Invert Location	--
1+95	7979.16'	5028.22'	4001.17'	Low Point of Sag	15.00'
1+96	7990.13'	5050.23'	3998.16'	Inlet Invert Location	--
2+05	7970.15'	5032.55'	4001.59'	End Slope Protection	15.00'
2+15	7960.70'	5035.79'	4002.29'	Centerline	13.65'
2+25	7950.93'	5037.89'	4003.29'	Centerline	11.06'
2+35	7940.98'	5038.83'	4004.58'	Centerline	8.51'
2+40	7935.89'	5038.86'	4005.35'	PT of 85' Rad. Curve	7.24'
2+45	7930.98'	5038.75'	4006.17'	End of Grade Sag	60.00'
2+56	7920.25'	5024.38'	4005.81'	Control Point 2	--

Note: Station Centerline Elevations are Finished Grade Elevations.

CROSS SECTION TYPICAL
STA 1+85 TO 2+05

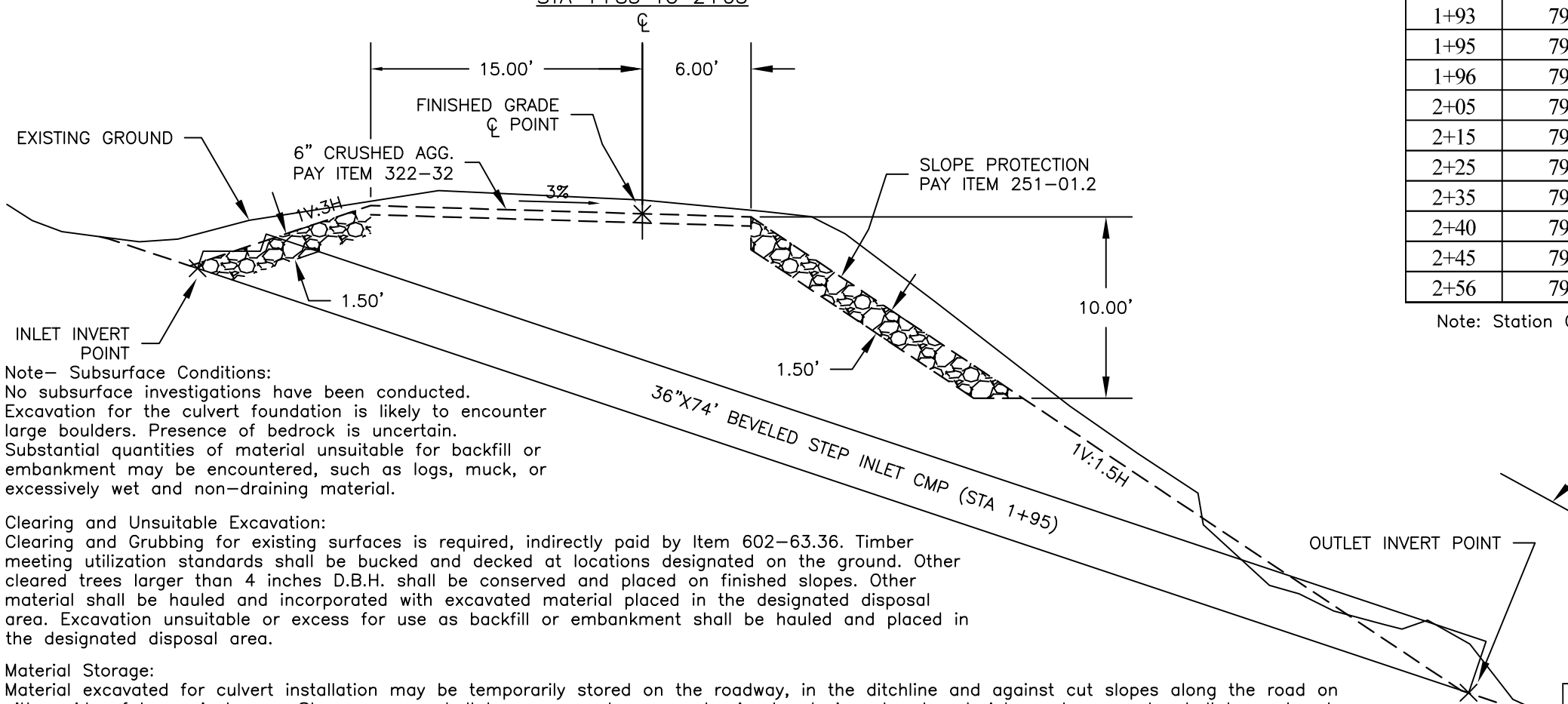

CROSS SECTION TYPICAL
STA 2+05 TO 2+45

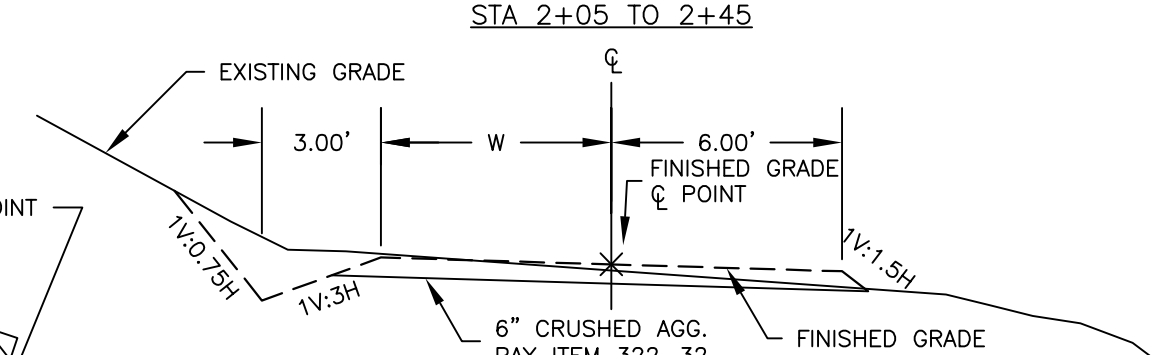

Note– Subsurface Conditions:
No subsurface investigations have been conducted. Excavation for the culvert foundation is likely to encounter large boulders. Presence of bedrock is uncertain. Substantial quantities of material unsuitable for backfill or embankment may be encountered, such as logs, muck, or excessively wet and non–draining material.

Clearing and Unsuitable Excavation:
Clearing and Grubbing for existing surfaces is required, indirectly paid by Item 602–63.36. Timber meeting utilization standards shall be bucked and decked at locations designated on the ground. Other cleared trees larger than 4 inches D.B.H. shall be conserved and placed on finished slopes. Other material shall be hauled and incorporated with excavated material placed in the designated disposal area. Excavation unsuitable or excess for use as backfill or embankment shall be hauled and placed in the designated disposal area.

Material Storage:
Material excavated for culvert installation may be temporarily stored on the roadway, in the ditchline and against cut slopes along the road on either side of he project area. Storage areas shall have aggregate removed prior to placing stored materials, and aggregate shall be replaced afterwards, placed and compacted in accordance with and indirectly paid by 322–32. Place straw mulch on all disturbed surfaces other than the roadbed.

PROJECT NAME:	SHEET TITLE:	
PARKER WYATT TIMBER SALE	PROFILE AND CROSS SECTION TYPICALS	SHT. 16 OF 21

Road 2232 M.P. 11.6
Parker Wyatt Timber Sale

Umpqua National Forest
Cottage Grove Ranger District

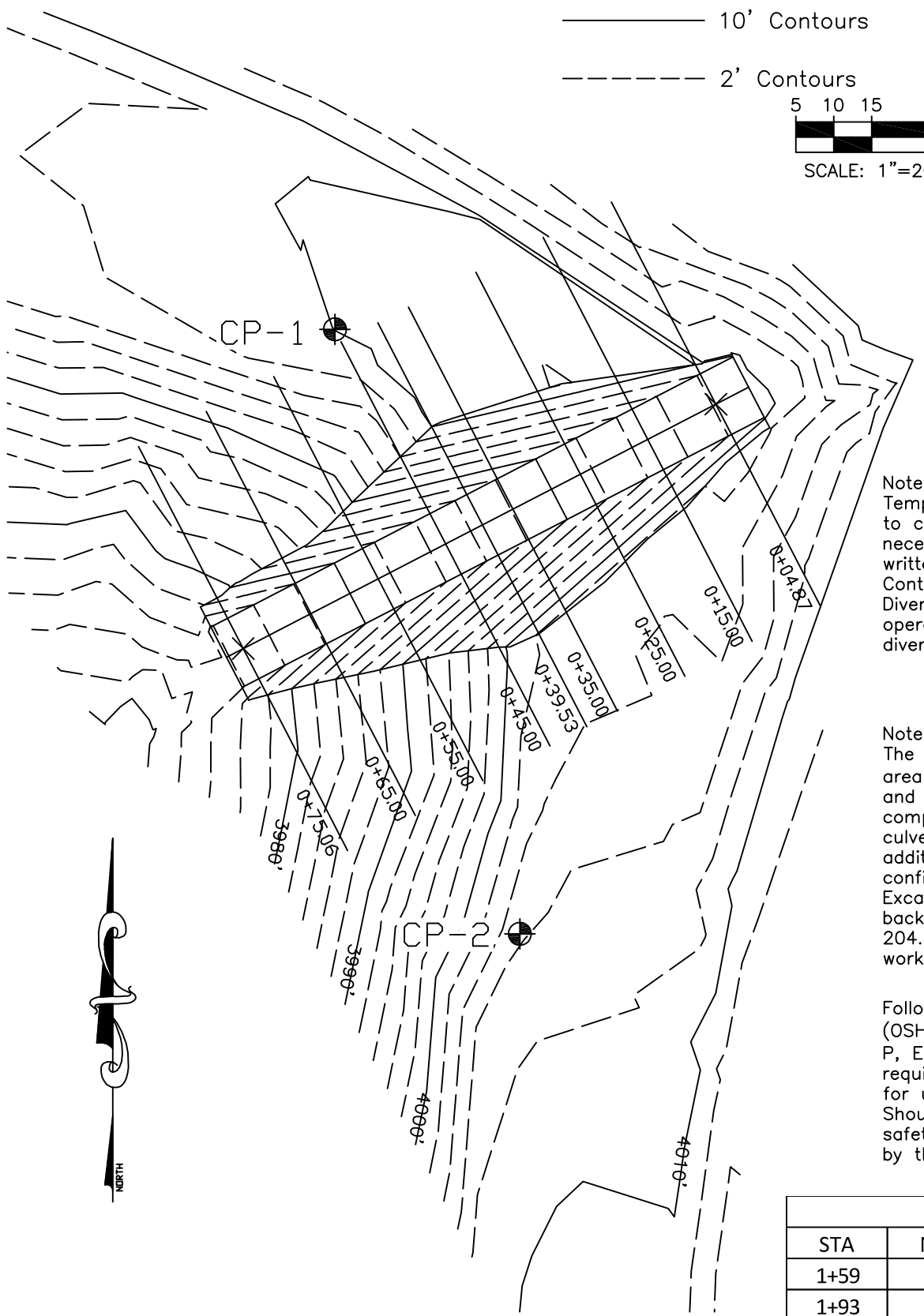

CULVERT REPLACEMENT EXCAVATION PLAN

Culvert Replacement PROFILE

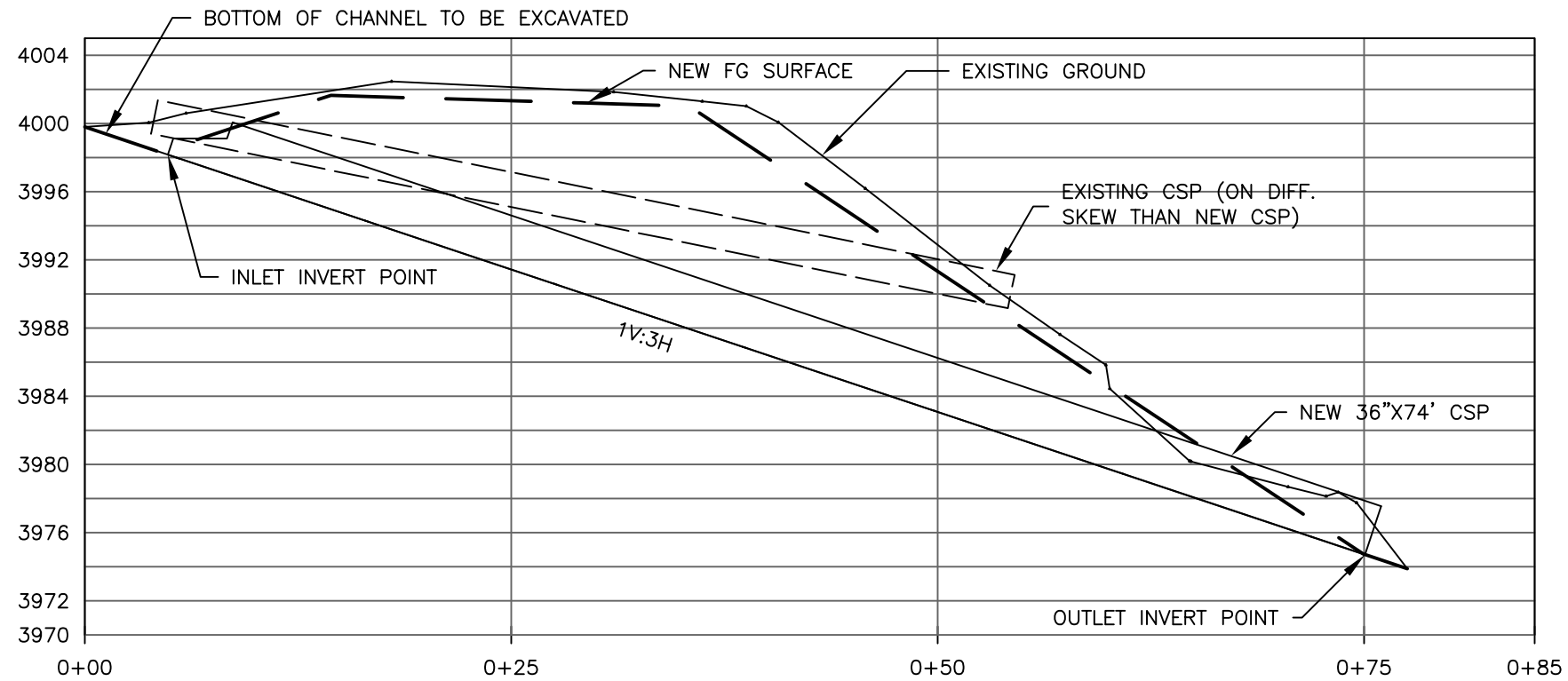

Note: Water Diversion and Dewatering:
Temporary water diversion facilities of sufficient capacity and strength to carry the entire stream flow shall be used. Dewatering may be necessary to facilitate foundation excavation, bedding, and backfilling. A written plan for diversion and dewatering shall be submitted by the Contractor and accepted by the Engineer prior to start of excavation. Diversion is required from the time stream flow is disrupted by operations and until culvert installation and backfill is complete. All diversion and dewatering work is indirectly paid by item 602–63.36.

Note– Excavation Limits:
The excavation as designed is an estimate of the area needed (without shoring or bracing) for safe and adequate installation of the culvert, backfilling, compaction, and placing embedment within the culvert. Lesser extents of excavation may suffice. Any additional excavation for equipment access will be confined to the limits of the existing roadway. Excavated areas created for access shall be backfilled and compacted in accordance with Sec 204.10 and 204.11. All Culvert excavation and related work for access is indirectly paid by item 602–63.36.

Follow Occupational Safety and Health Administration (OSHA) safety regulations (29 CFR, part 1926, subpart P, Excavation), or OSHA–approved State Plan requirements for sloping the sides of excavations and for using shoring, bracing, and other safety features. Should actual ground conditions require a change for safety reasons, the change shall be approved in writing by the CO, and the contract modified as appropriate.

TYPICAL CHANNEL EXCAVATION
CROSS SECTION

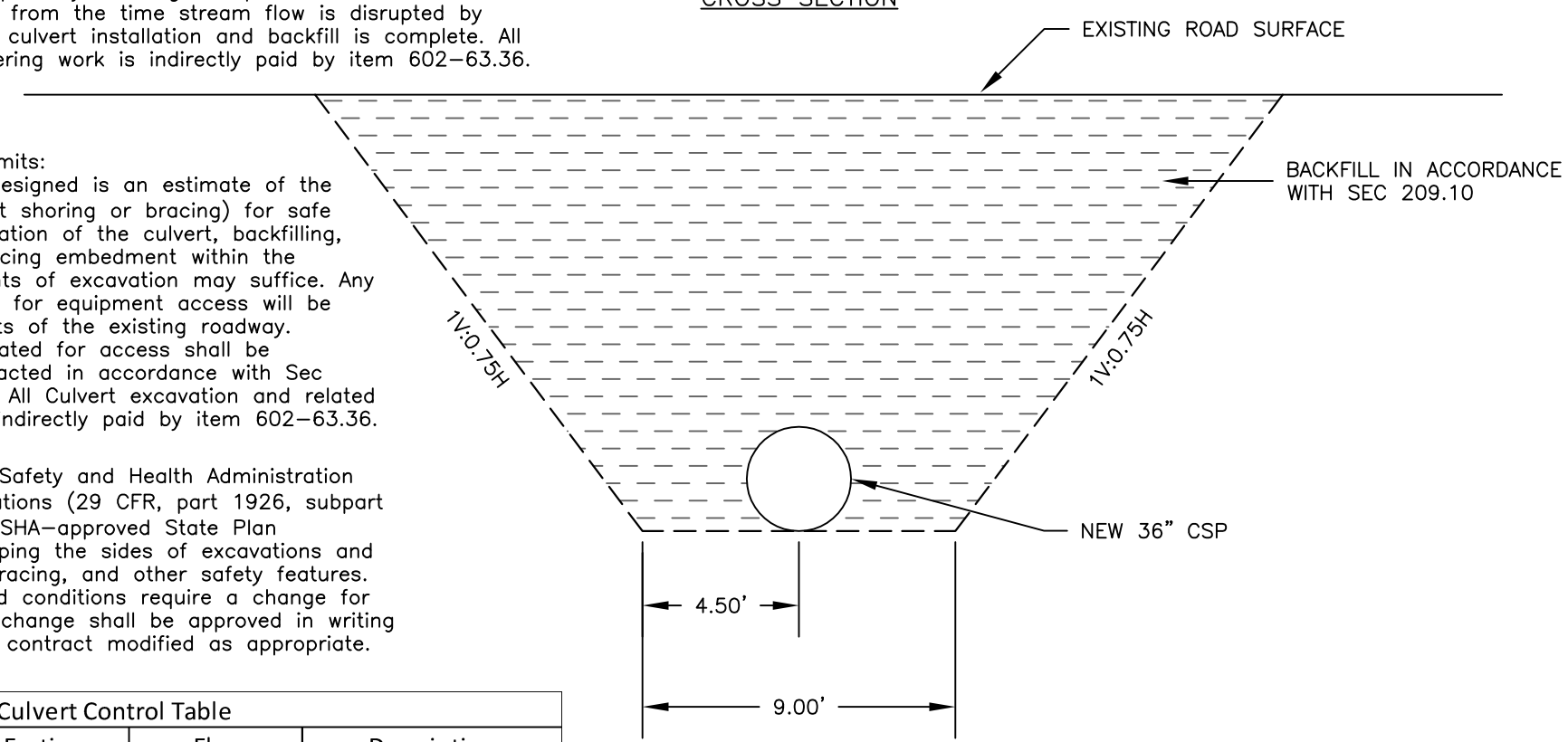

Culvert Control Table				
STA	Northing	Easting	Elev	Description
1+59	8000.00	5000.00	4000.02	Control Point 1
1+93	7957.89	4987.88	3974.71	Outlet Invert Location
1+96	7990.13	5050.23	3998.16	Inlet Invert Location
2+56	7920.25	5024.38	4005.81	Control Point 2

PROJECT NAME:	SHEET TITLE:	SHT.
PARKER WYATT TIMBER SALE	EXCAVATION PLAN, PROFILE, & CROSS SECTION TYPICAL	17 OF 21

MP	SPECIFIED ROAD WORKLIST- ROAD 2216	PAY ITEM	QUANTITY
0.00	Junction Road 1746 MP 9.34 and Road 2232. **Begin work on this road. Begin roadside brushing Begin reconditioning existing roadway.** Conserve and utilize the aggregate that has scattered onto the shoulders of the roadway and re-incorporate into the traveled way. Scarify aggregate surface in accordance with FP-03 303.06. Shape and compact the traveled way, shoulders and existing staked turnouts. Existing staked turnouts are variable width, length, and transitions. See Turnout Table on Sheet 8. Mile post stakes are at approximate center of turnout. Clean inlets, outlets and reshape ditches as staked.	230-51 303-57	11.34 MILE 11.34 MILE
0.24	Center of turnout, right.		
0.52	Center of turnout, right.		
0.62	Center of turnout, right.		
0.73	Center of turnout, right.		
1.07	Center of turnout, right.		
1.16	Center of turnout, right.		
1.26	Place 0.5 cubic yards of class 2 riprap in scour hole at outlet	251-01.2	0.5 CY
1.33	Center of turnout, right.		
1.62	Center of turnout, right.		
1.84	Center of turnout, right.		
2.00	Center of turnout, right.		
2.06	Center of turnout, left.		
2.17	Center of turnout, right.		
2.26	Center of turnout, left.		
2.31	Remove existing culvert and replace with a new 36" CMP. Conserve and utlilze existing aggregate from roadbed at pipe excavation site. Obtain and haul rocky material from Parker Quarry Road 2216 MP 6.34 for additional embankment needs. Replace conserved aggregate on road surface, supplementing the aggregate surface with 85 cubic yards of material obtained from Blodgett Quarry or stockpile site road 2232 MP 12.76. Any unsuitable backfill material from excavation will be hauled (indirectly paid by Item 602-63.36) to approved disposal sites off Road 2216, MP 3.82 @ junction with 2216-776. Scatter woody debris and slash along fill slope. See Sheets 10-12 for construction details.	152-01.1 203-01.1 204-01.2 204-73 251-01.4 322-32 602-63.36 625-07	1 LS 1 EA All LS 140 CY 24 CY 85 CY 80 LF 0.10 ACRE
2.38	Center of turnout, right.		
2.43	Center of turnout, right.		
2.53	Center of turnout, right.		
2.65	Center of turnout, right.		
2.70	Center of turnout, right.		
2.73	24" CMP stream crossing downdrain has seperated. Re-attach downdrain with special anchors and install10 CY of class 3 riprap in scour hole. See Sht 6 for anchor detail.	251-01.3 607-24	10 CY 1 EA
2.88	Center of turnout, right.		
3.10	Center of turnout, right.		
3.13	Clean inlet, Reattach 18" downspout. Place 2 cy of class 2 riprap in scour hole.	251-01.2 607-18	2 CY 1 EA
3.18	Center of turnout, right.		
3.34	Center of turnout, right.		
3.82	Junction to road 2216-776		
4.11	Center of turnout, right.		
4.21	Center of turnout, right.		
4.41	Center of turnout, right.		
4.57	Center of turnout, right.		
4.61	Center of turnout, right.		
4.75	Remove existing culvert and replace with a new 24" CMP. Conserve and utlilze existing aggregate from roadbed at pipe excavation site. Suitable material from existing excavation may be used as backfill material. Replace conserved aggregate on road surface, supplementing the aggregate surface with 5 cubic yards of material obtained from Blodget Quarry or stockpile site road 2232 MP 12.76 Any unsuitable backfill material from excavation will be hauled (indirectly paid by Item 602-63.24) to approved disposal sites. Woody debris and slash may be scattered along fill slope.	203-01.1 251-01.3 322-32 602-63.24	1 EA 3 CY 5 CY 63 LF
4.81	Center of turnout, right.		
4.91	Center of turnout, right.		
5.00	Center of turnout, right.		
5.11	Center of turnout, right.		
5.15	Center of turnout, right.		
5.33	Center of turnout, right.		
5.36	Center of turnout, right.		
5.63	Center of turnout, right.		
5.77	Center of turnout, right.		
5.91	Center of turnout, right.		
5.98	Center of turnout, right.		
6.12	Center of turnout, right.		
6.27	Center of turnout, right.		
6.36	Center of turnout, right. Adjacent to Parker Quarry		
6.43	Center of turnout, right.		
6.50	Center of turnout, right.		
6.60	Center of turnout, right.		
6.80	Center of turnout, right.		
6.93	Center of turnout, right.		
7.06	Center of turnout, right.		
7.11	Center of turnout, right.		
7.33	Center of turnout, right.		
7.40	Center of turnout, right.		
7.54	Center of turnout, right. Junction to road 2216-740 right		
7.60	Center of turnout, right.		

MP	SPECIFIED ROAD WORKLIST- ROAD 2216 Continued	PAY ITEM	QUANTITY
7.95	Center of turnout, right.		
8.02	Center of turnout, right.		
8.13	Center of turnout, right.		
8.27	Center of turnout, right.		
8.35	Center of turnout, right.		
8.43	Center of turnout, right.		
8.63	Center of turnout, right.		
8.70	Center of turnout, right.		
8.76	Center of turnout, right.		
8.89	Center of turnout, right.		
9.07	Center of turnout, right.		
9.23	Center of turnout, right.		
9.28	Center of turnout, right.		
9.33	Center of turnout, right.		
9.36	Center of turnout, right.		
9.43	Center of turnout, right.		
9.57	Center of turnout, right.		
9.69	Center of turnout, right.		
9.73	Remove existing culvert and replace with a new 18" CMP. Conserve and utlilze existing aggregate from roadbed at pipe excavation site. Suitable material from existing excavation may be used as backfill material. Replace conserved aggregate on road surface, supplementing the aggregate surface with 3 cubic yards of material obtained from Blodget Quarry or stockpile site road 2232 MP 12.76 Any unsuitable backfill material from excavation will be hauled (indirectly paid by Item 602-63.18) to approved disposal sites. Woody debris and slash may be scattered along fill slope.	203-01.1 251-01.3 322-32 602-63.18	1 EA 2 CY 5 CY 34 LF
9.96	Center of turnout, right.		
10.04	Center of turnout, right.		
10.10	Center of turnout, right.		
10.25	Center of turnout, right.		
10.30	Center of turnout, right.		
10.40	Center of turnout, right. Junction to road 2232-709.		
10.55	Center of turnout, right.		
10.59	Center of turnout, right.		
10.70	Center of turnout, right.		
10.82	Center of turnout, right.		
10.88	Center of turnout, right.		
11.04	Center of turnout, right.		
11.18	Center of turnout, right.		
11.27	Center of turnout, right.		
11.34	End of work on road 2216 junction to road 2200		

MP	SPECIFIED ROAD WORKLIST- ROAD 2232	PAY ITEM	QUANTITY
5.75	**Begin work on this road.** Remove existing culvert and replace with a new 24" CMP. Conserve and utilize existing aggregate from roadbed at pipe excavation site. Suitable material from existing excavation may be used as backfill material. Replace conserved aggregate on road surface with 5 cubic yards of material obtained from Blodgett Quarry or stockpile site road 2232 MP 12.76. Any unsuitable backfill material, woody debris, or slash from excavation will be hauled (indirectly paid by item 602-63.24) to approved disposal sites. All unsuitable material shall be slope to drain at disposal sites.	203-01.1 251-01.3 322-32 602-63.24	1 EA 2 CY 5 CY 48 LF
10.00	**Begin roadside brushing Begin reconditioning existing roadway.** Conserve and utilize the aggregate that has scattered onto the shoulders of the roadway and re-incorporate into the traveled way. Scarify aggregate surface in accordance with FP-03 303.06. Shape and compact the traveled way, shoulders and existing staked turnouts. Existing staked turnouts are variable width, length, and transitions. See Turnout Table, Sheet 8. Mile post stakes are at approximate center of turnout. Clean inlets, outlets and reshape ditch as staked.	230-51 303-57	4.22 MILE 4.22 MILE
10.40	Clean inlet and outlet		
10.46	Clean outlet		
10.60	Clean inlet and outlet		
10.86	Clean inlet and outlet		
10.88	Center of turnout, right.		
10.95	Clean inlet and outlet		
11.04	Clean inlet and outlet		
11.30	Remove existing culvert and replace the road template in accordance with Roadway Excavation, Compaction B	203-01.1 204-01.2 204-73	1 EA All LS 15 CY
11.31	Install a new 18" CMP, including new elbow, spillway assembly, and anchors. Conserve and utilize existing aggregate from roadbed at pipe excavation site. Suitable material from existing excavation may be used as backfill material. Replace conserved aggregate on road surface, supplementing the aggregate surface with 5 cubic yards of material obtained from Blodgett Quarry or stockpile site road 2232 MP 12.76. Any unsuitable backfill material, woody debris, or slash from excavation will be hauled (indirectly paid by Item 602-63.18) to approved disposal sites. All unsuitable material shall be slope to drain at disposal sites. See Sheets 13 & 14.	152-01.1 251-01.3 322-32 602-63.18 606-02.18 606-05.18	1 LS 2 CY 5 CY 42 LF 20 LF 1 EA
11.40	Clean inlet and outlet		
11.50	Clean inlet and outlet		
11.60	Remove existing culvert and replace with a new 36" CMP with step bevel inlet. Conserve and utilize existing aggregate from roadbed at pipe excavation site. Suitable material from existing excavation may be used as backfill material. Replace conserved aggregate on road surface with 65 cubic yards of material obtained from Blodgett Quarry or stockpile site road 2232 MP 12.76. Any unsuitable backfill material from excavation will be hauled (indirectly paid by item 602-63.36) to approved disposal sites. All unsuitable material shall be slope to drain at disposal sites. Scatter woody debris and slash around fill slopes. See Sheets 15-17 for construction details.	152-01.1 203-01.1 204-01.2 251-01.2 251-01.4 322-32 602-63.36 625-07	1 LS 1 EA All LS 30 CY 8 CY 65 CY 74 LF 0.06 ACRE
11.66	Remove existing culvert and replace with a new 18" CMP. Conserve and utilize existing aggregate from roadbed at pipe excavation site. Suitable material from existing excavation may be used as backfill material. Replace conserved aggregate on road surface with 5 cubic yards of material obtained from Blodgett Quarry. or stockpile site road 2232 MP 12.76. Any unsuitable backfill material, woody debris, slash or boulders from excavation will be hauled (indirectly paid by item 602-63.18) to approved disposal sites. All unsuitable material shall be slope to drain at disposal sites.	203-01.1 251-01.3 322-32 602-63.18	1 EA 2 CY 5 CY 42 LF
11.68	Center of turnout, right.		
11.70	Remove existing culvert and replace with a new 24" CMP, including new elbow, spillway assembly, and anchors. Conserve and utilize existing aggregate from roadbed at pipe excavation site. Suitable material from existing excavation may be used as backfill material. Replace conserved aggregate on road surface, supplementing the aggregate surface with 5 cubic yards of material obtained from Blodgett Quarry or stockpile site road 2232 MP 12.76. Any unsuitable backfill material, woody debris, or slash from excavation will be hauled (indirectly paid by Item 602-63.24) to approved disposal sites. All unsuitable material shall be slope to drain at disposal sites.	203-01.1 251-01.3 322-32 602-63.24 606-02.24 606-05.24	1 EA 3 CY 5 CY 36 LF 40 LF 1 EA
11.75	Install a new 24" CMP with elbow, spillway assembly, and anchors. Install beveled drop inlet. Conserve and utilize existing aggregate from roadbed at pipe excavation site. Suitable material from existing excavation may be used as backfill material. Replace conserved aggregate on road surface, supplementing the aggregate surface with 5 cubic yards of material obtained from Blodgett Quarry or stockpile site road 2232 MP 12.76. Any unsuitable backfill material, woody debris, slash or boulders from excavation will be hauled (indirectly paid by Item 602-63.24) to approved disposal sites. All unsuitable material shall be slope to drain at disposal sites.	251-01.3 322-32 602-63.24 604-03 606-02.24 606-05.24	3 CY 5 CY 33 LF 1 EA 20 LF 1 EA
11.80	Clean inlet and outlet		
11.90	Clean inlet		
11.98	Clean inlet		
12.00	Clean outlet		
12.30	Clean inlet and outlet		
12.50	Clean inlet		
12.60	Clean inlet		
12.76	Aggregate Stockpile location		
12.86	Center of turnout, right.		
12.97	Clean catch basin, remove tree from off outlet and place 3 cubic yards of class 3 riprap in scour hole.	251-01.3	3 CY
12.99	Center of turnout, right.		
13.00	Center of turnout, right.		
13.31	Center of turnout, right.		
13.48	Center of turnout, left.		
13.53	Center of turnout, right.		
13.56	Place 2 cubic yards of class 3 riprap in scour hole at outlet	251-01.3	2 CY
13.59	Center of turnout, right.		
13.68	Center of turnout, right.		
13.87	Clean and jack open inlet		
13.99	Center of turnout, right.		
14.04	Clean inlet		
14.07	Center of turnout, right.		
14.22	"Y" junction Road 2216 right and Road 1746 MP 9.34. **End roadside brushing and reconditioning existing roadway.**		

MP	SPECIFIED ROAD WORKLIST- ROAD 2216-732	PAY ITEM	QUANTITY
0.00	**Begin work on this road**, including roadside brushing and ditch reconditioning	230-51 303-58	0.8 0.8 MILE
0.64	Drainage excavation, construct low water ford as shown on Sheet 7	204-20.4	1 EACH
	Place Class 2 riprap on fill slope and Class 1 riprap on roadway.	251-01.1 251-01.2	23 CY 3 CY
0.80	**End roadwork on FSR 2216-732**		
MP	**SPECIFIED ROAD WORKLIST- ROAD 2216-733**	**PAY ITEM**	**QUANTITY**
0.00	**Begin work on this road.** Begin Clearing and Grubbing	201-05	0.50 MILE
0.00	Begin Roadway Excavation, Compaction Method C. See Sheet 9	204-01.1	0.50 MILE
0.02	Install earthen berm, Type A	204-27	1 EACH
0.09	Drainage excavation; Install cross ditch, non-drivable	204-20.2	1 EACH
0.14	Drainage excavation; Install cross ditch, non-drivable	204-20.2	1 EACH
0.17	Drainage excavation; Install cross ditch, non-drivable	204-20.2	1 EACH
0.23	Drainage excavation; Install cross ditch, non-drivable	204-20.2	1 EACH
0.25	Drainage excavation; Install cross ditch, non-drivable	204-20.2	1 EACH
0.50	**End roadwork on FSR 2216-733**		
MP	**SPECIFIED ROAD WORKLIST- ROAD 5850-927**	**PAY ITEM**	**QUANTITY**
0.00	**Begin work on this road,** Begin Roadway Excavation, Compaction Method C. Ditched Cross Section,See Sheet 9	204-01.1	0.98 MILE
0.00	Begin Roadside Brushing	230-51	0.98 MILE
0.40 - 0.98	Drainage excavation; Install cross ditch, drivable. Location as staked. Begin Outsloped Cross Section,See Sheet 9.	204-20.1	5 EACH
0.98	**End roadwork on FSR 5850-927**		

PARKER WYATT TIMBER SALE		**RD 2216 & 5850 Spurs WORKLIST**	SHEET **21** OF **21**