CHATTAHOOCHEE–OCONEE NATIONAL FOREST

OCONEE R. D.
Pearson Branch Road
F. S. 1082
Traffic Service Level C

Reconstruct 0.58 mile

INDEX

Page	Description
1	Cover Sheet
2	Location Map
3	Summary of Quantities
4–8	Typical Sections and Details
9	Description of Work
10–25	Special Project Specification

D.W. Byrd — 20 March 2013
FOREST ENGINEER – ROADS — DATE

3/20/2013
ER STAFF OFFICER — DATE

3/19/2013
DISTRICT RANGER — DATE

3/21/13
FOREST SUPERVISOR — DATE

CHATTAHOOCHEE – OCONEE NATIONAL FOREST

OCONEE RANGER DISTRICT

GOOCH TIMBER SALE

PEARSON BRANCH ROAD

FS 1082

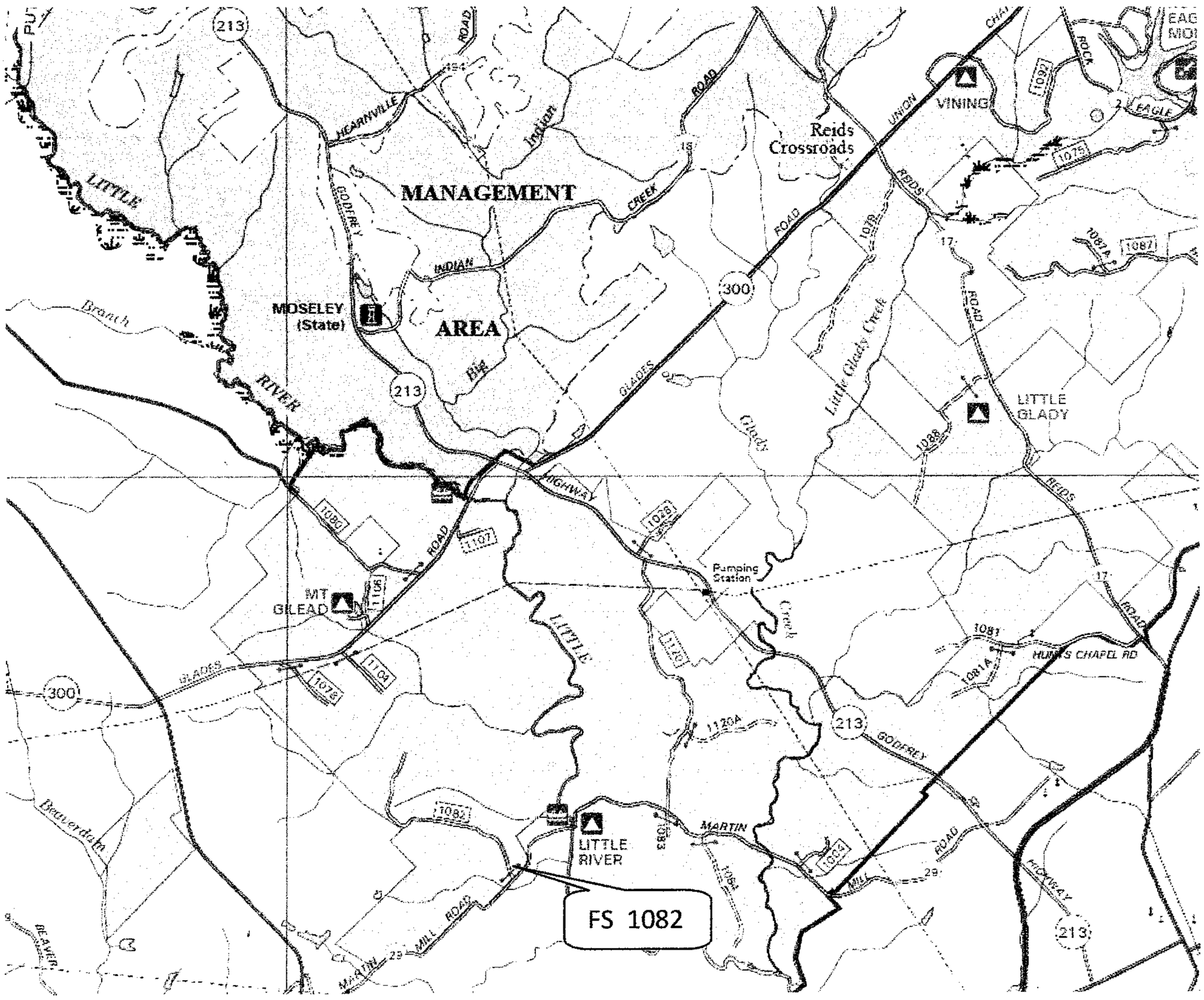

PART I - SCHEDULE OF ITEMS

SECTION B – SERVICES AND PRICES

(Reconstruction F.S. 1082)
Oconee
Chatt-Oconee
Putnam

B- 1 - SCHEDULE OF ITEMS

ITEM NO.	DESCRIPTION	PAY UNIT	EST. QTY.	UNIT PRICE	TOTAL PRICE
20208	Removal of individual trees, disposal of tops and limbs____, logs___, stumps____	Lump Sum	1	$_____	$_____
30322	Road reconditioning, compaction method __d_	Mile	0.58	$_____	$_____
30801	Roadway aggregate GAB, compaction method ___a___	Ton	18	$_____	$_____
30802	Roadway aggregate GA #4, compaction method ___a___	Ton	80	$_____	$_____
60211	18_Inch Corrugated Steel Pipe_16 gauge _Thickness	LF	96	$_____	$_____
63301	Sign System	Each	1	$_____	$_____

B-2 - NOTE: Payment for bond premiums in accordance with Clause 52.232-5, Payments under Fixed-Price Construction Contracts, shall not be in addition to the contract price. Include bond payments under 151.01 Mobilization.

Payment will be made on actual work performed as described in FP-03 109.01 unless otherwise noted.

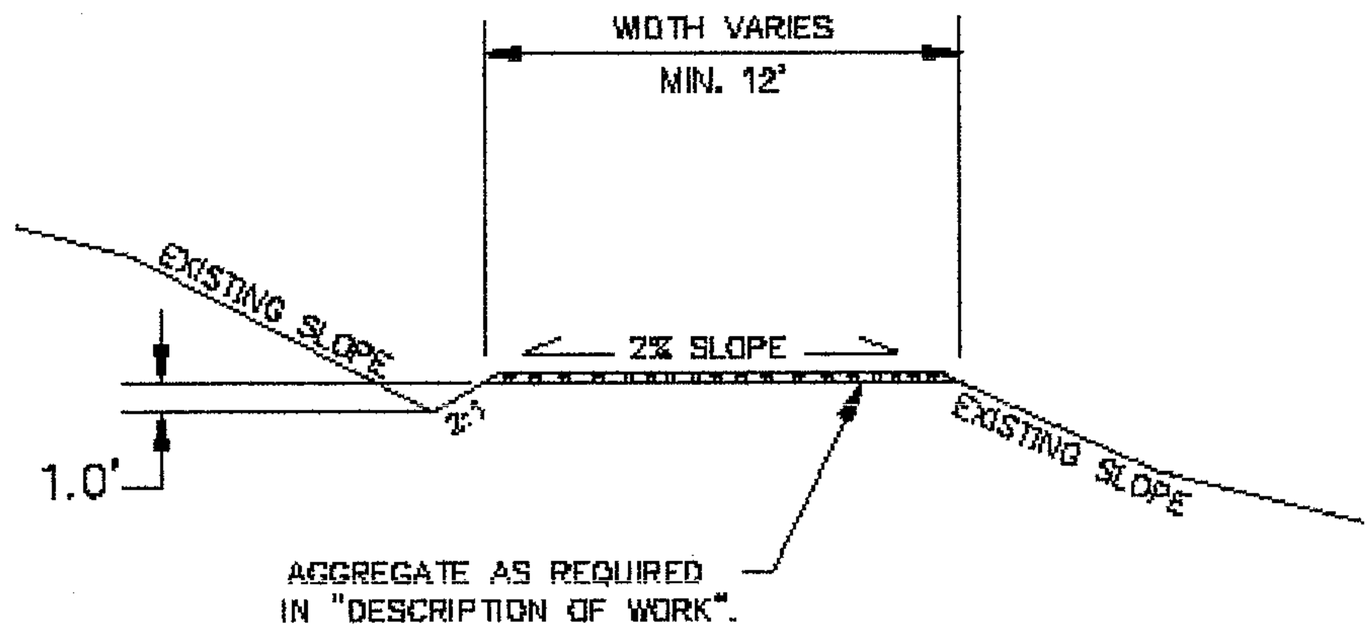

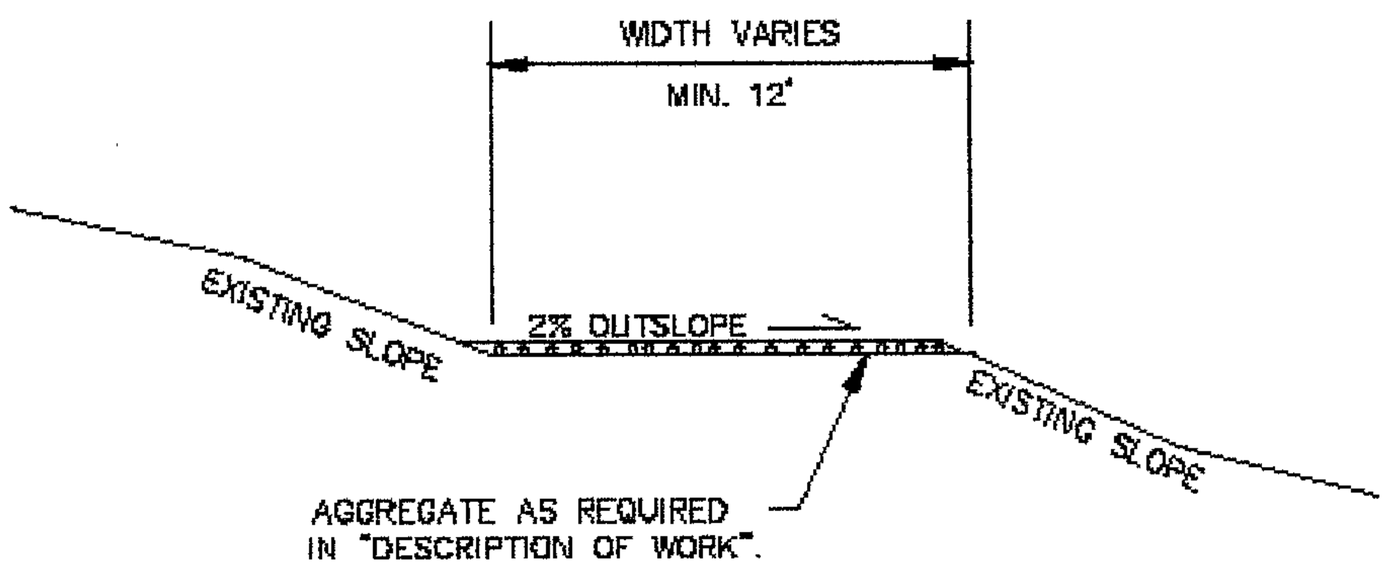

NOT TO SCALE

5	14	[illegible]	[illegible]	[illegible]	[illegible]	[illegible]	[illegible]	[illegible]	[illegible]	[illegible]	[illegible]

PROJECT: [illegible]
LOCATION: [illegible]
FORMAT: [illegible]

[illegible]

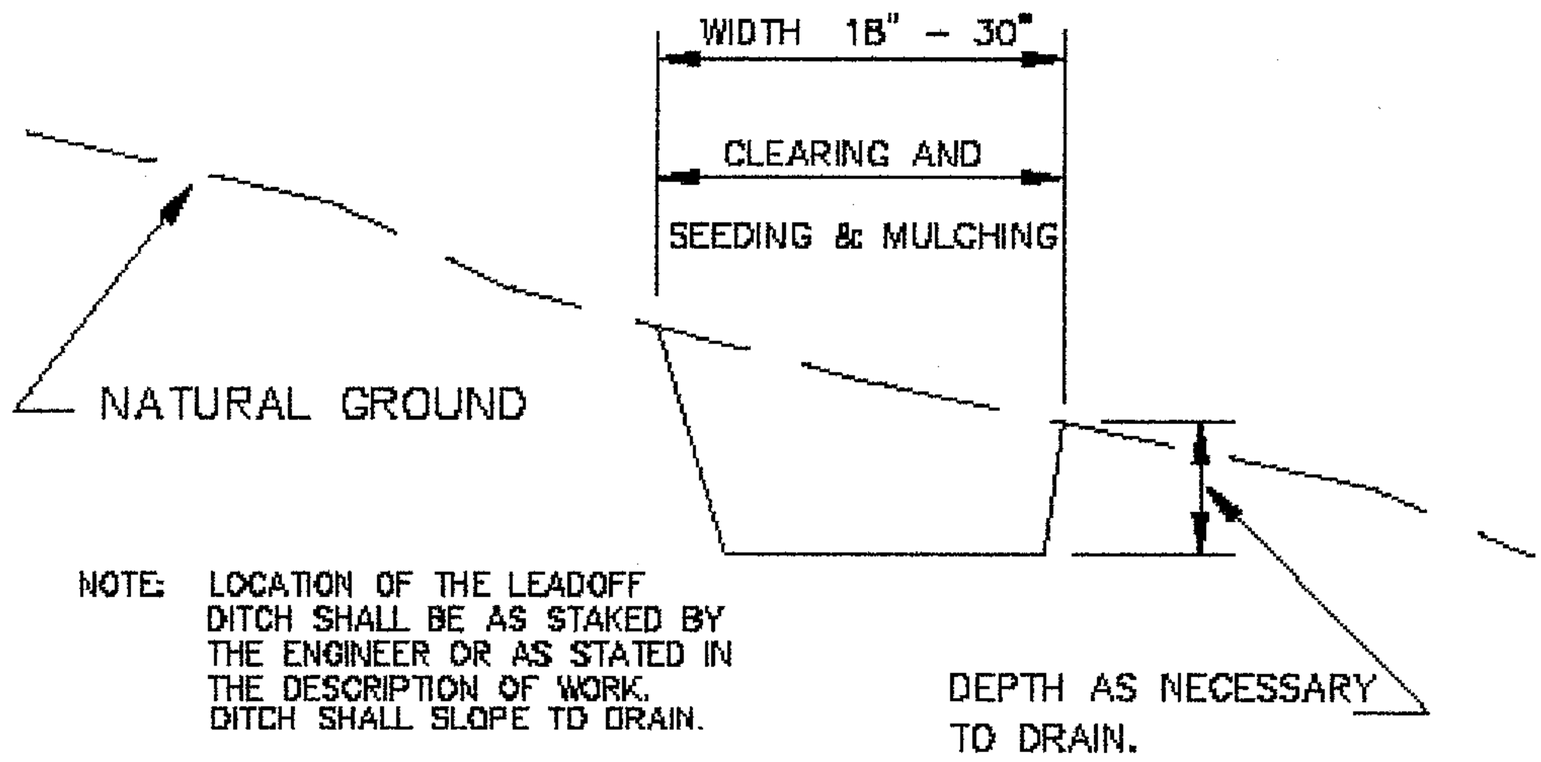

NOTE: LOCATION OF THE LEADOFF DITCH SHALL BE AS STAKED BY THE ENGINEER OR AS STATED IN THE DESCRIPTION OF WORK. DITCH SHALL SLOPE TO DRAIN.

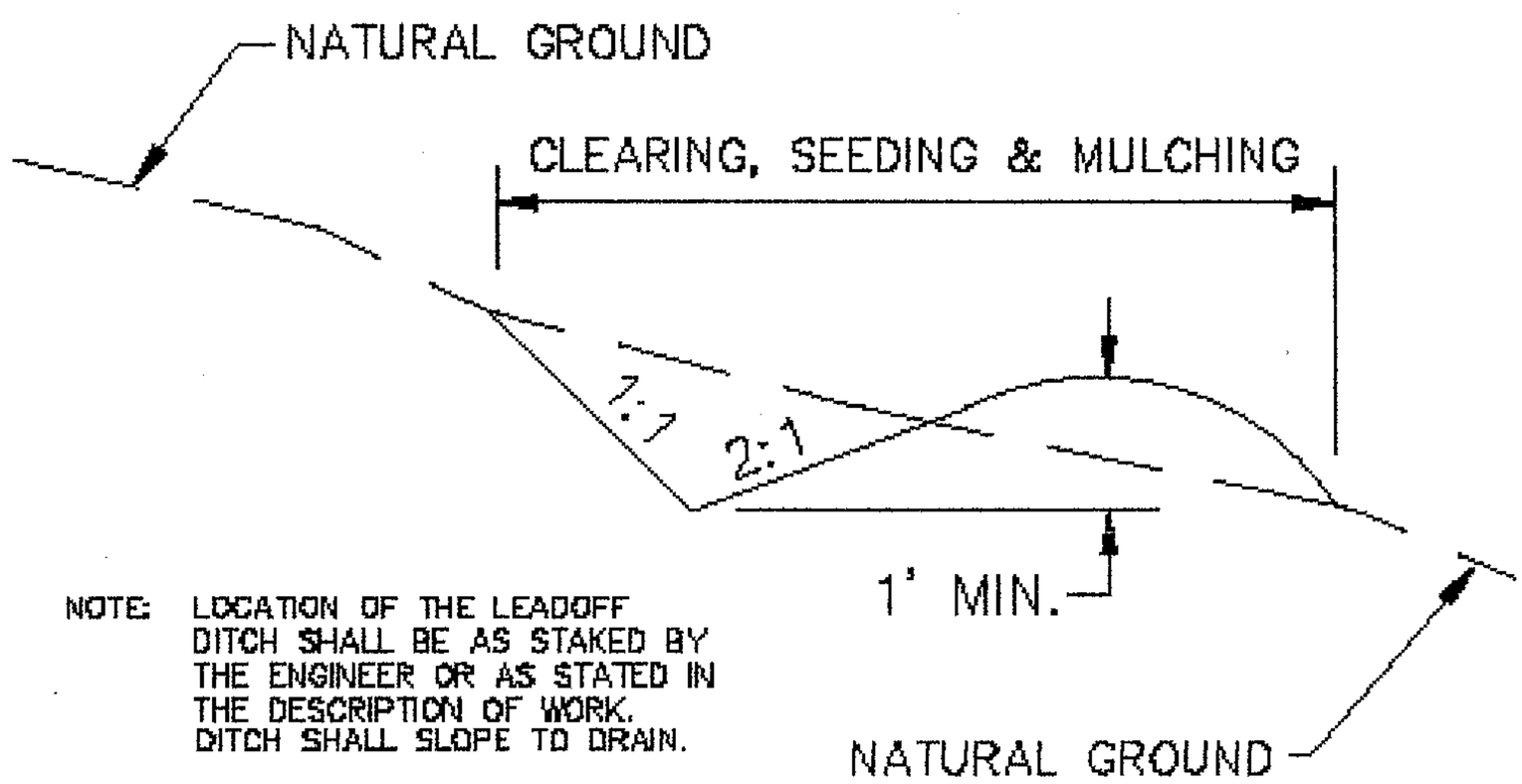

NOTE: LOCATION OF THE LEADOFF DITCH SHALL BE AS STAKED BY THE ENGINEER OR AS STATED IN THE DESCRIPTION OF WORK. DITCH SHALL SLOPE TO DRAIN.

NOT TO SCALE

PROJECT: Oconee Roads
LOCATION: OCONEE NF
FOREST: CHATTAHOOCHEE-OCONEE NFS

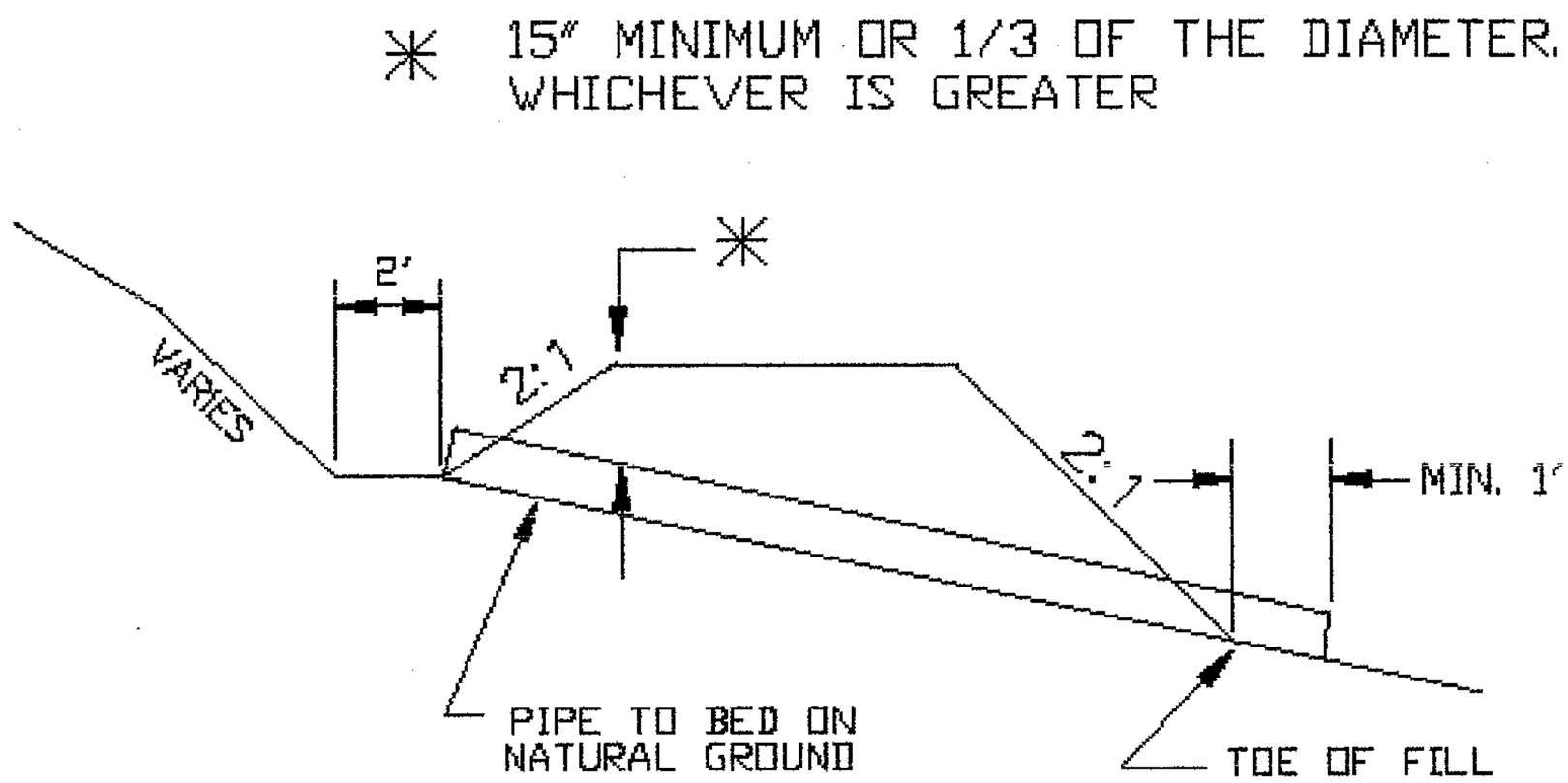

MAINTAIN EXISTING ROAD TEMPLATE, OUT SLOPE OR INSLOPE, UNLESS OTHERWISE STATED IN THE DESCRIPTION OF WORK.

NOT TO SCALE

PROJECT:

LOCATION: OCONEE NF

FOREST: CHATTAHOOCHEE-OCONEE NFS

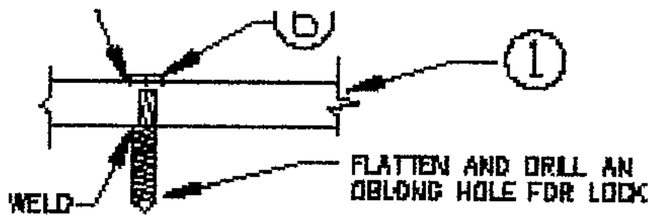

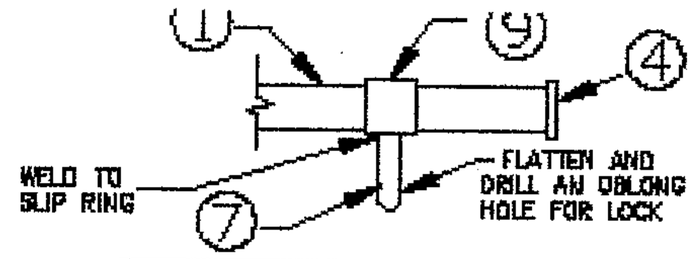

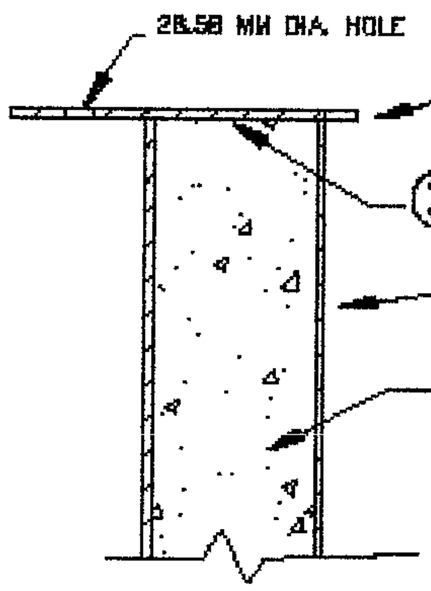

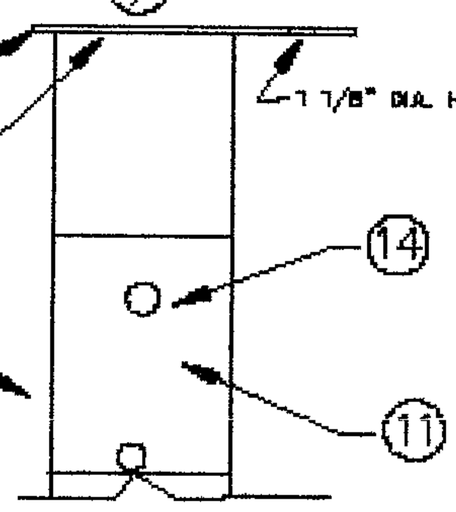

NOTE:
ALL STEEL SHALL BE PAINTED WITH ONE COAT OF CONTROL PRIMER (SHERWIN–WILLIAMS A57R17 OR EQUAL) AND TWO COATS OF HIGH VISIBILITY BLACK LIQUID. ALL STEEL SHALL BE STRUCTURAL GRADE, SCHEDULE 40 UNLESS OTHERWISE APPROVED BY THE ENGINEER.

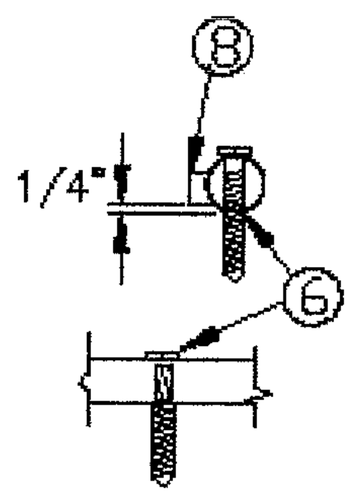

DO NOT WELD PLATE TO SLIP RING SIDE OF GATE BAR.

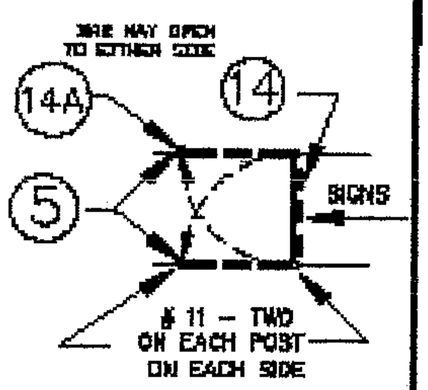

NO.	NAME	DESCRIPTION	QTY
1	GATE BAR	2" DIA. x 216" STEEL PIPE	1
2	GATE POST	5.047" DIA. x 60" STEEL PIPE	2
3	POST CAP	3/8" X 7 1/2 " X 12" PLATE	2
4	GATE BAR CAP	3/8" X 2 1/2" DIA. PLATE	2
5	V NOTCHED TREATED POST, BURIED 0.61M	4" X 4" x VARIES	2
6	HEX BOLT	1" X 3 1/2"	1
7	STEEL PEN	1" DIA. X 1 1/2"	1
8	WELDED STEEL PLATE	1" X 1" X 1/4"	1
9	SLIP RING	2 1/8" I.D. X 3" PIPE	1
10	0.61 M X 20.32 C	BM–L–R BM–R–R	1 1
11	OBJECT MARKER 0.15 M X 0.31 M	OM–Z–B	8
12	ROAD CLOSED SIGN, 0.61 M X 0.31 M	FR11–2–24	1
13	SIGN FASTENER, POP RIVETS OR BOLT DEFORM THREADS	3/16"	12
14	ROUND HEAD BOLTS W/NUTS AND WASHERS,	3/16" x 1"	8
14A	WOOD SCREWS	3/16" X 1"	8
●15	CONCRETE FOR POST	CUBIC YARD	.77

DENOTES FILLET WELD, WELD ALL AROUND

NOT TO SCALE

●ALL CONCRETE SHALL MEET REQUIREMENTS OF ITEM 601.

PROJECT:
LOCATION:
FOREMAN:

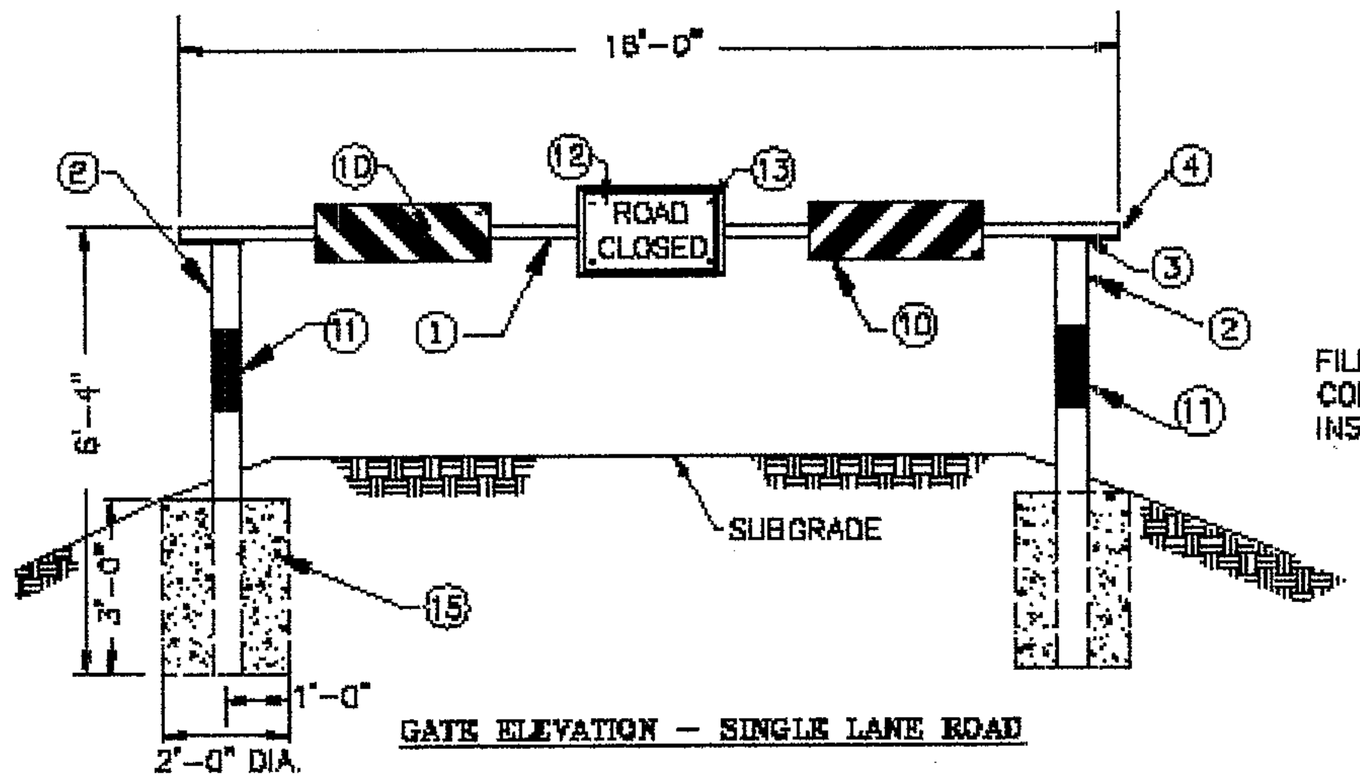

GATE ELEVATION – SINGLE LANE ROAD

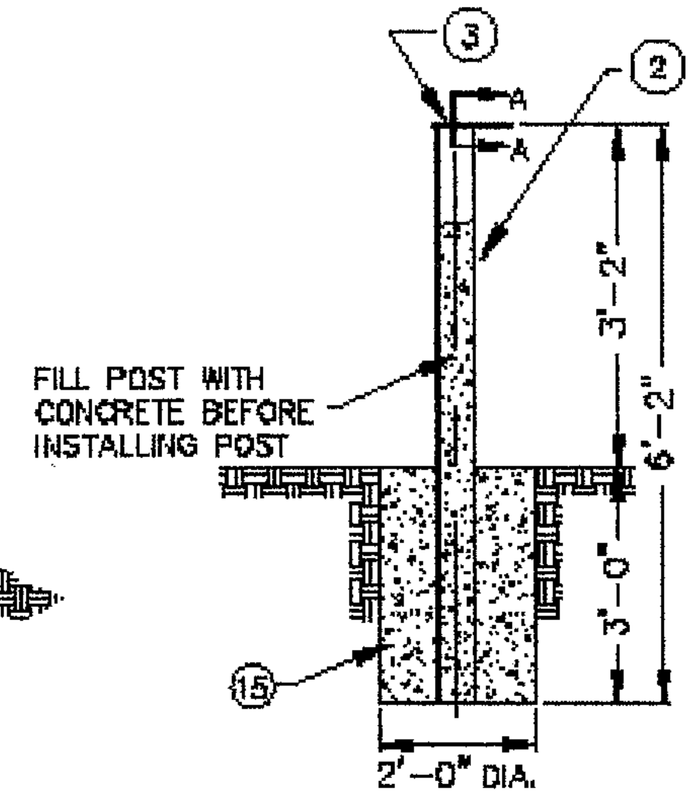

POSTS DETAIL

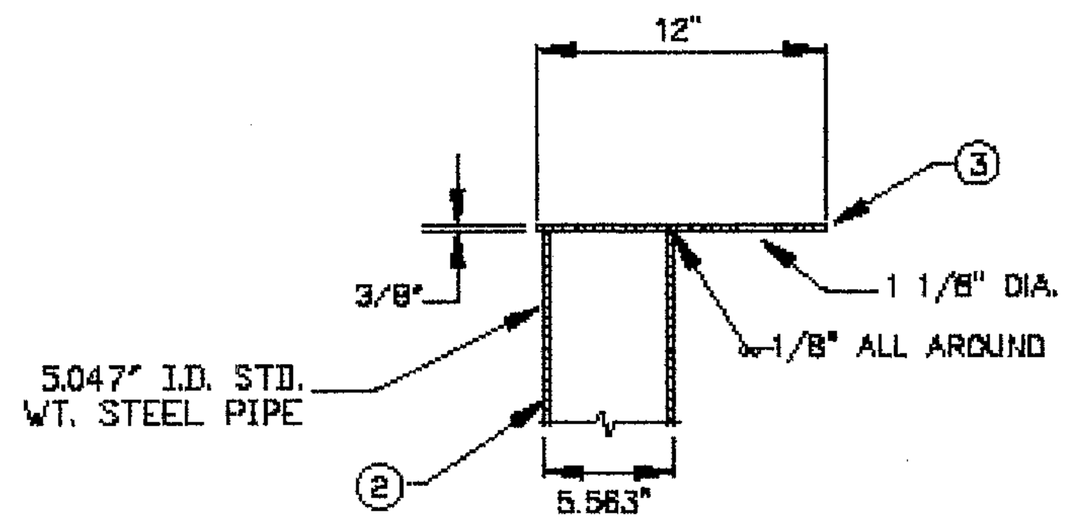

SECTION A–A

NOT TO SCALE

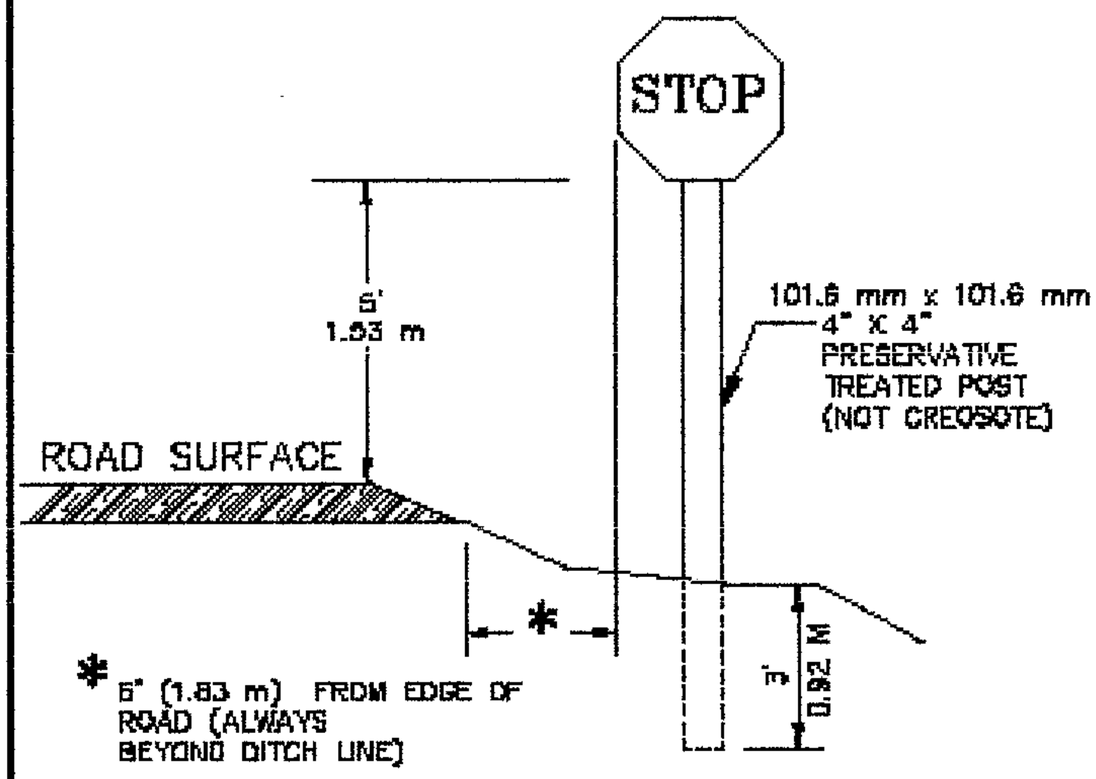

STANDARD MOUNTING

NOT TO SCALE

Forest Service
Specified Road Reconstruction
Pearson Branch Road
F.S. Road 1082

00+00	Begin project in accordance with typical sections and FS Specifications. Begin at intersection of County road and F. S. 1082. Begin 2" #4 stone.
00+08	Replace existing culvert with new 18" x44' CSP
0+15	Install new stop sign
3+85	Open existing turnout
7+40	Open existing turnout.
9+70	Open existing turnouts
15+10	Open existing turnout
21+90	Replace existing culvert with new 18" x 26' CSP
24+25	Replace existing culvert with new 18" x 26' CSP
50+40	Radius Point 50' turnaround.

GENERAL NOTES

1. The basic road width for the reconstruction of this road is 12 feet. Basic ROW clearing is 30 feet. All debrie old and new will be scattered outside of existing clearing limits.
2. Hazard trees will be marked prior to reconstruction.
3. All disturbed soils shall be seeded and mulched. Mulch will not be required where aggregate is placed.
4. All pipe and gates removed will be removed from Forest Service property.

Table of Contents

Table of Contents 1

Preface 13

101 - Terms, Format, and Definitions 13

101.01 Meaning of Terms 13

101.03 Abbreviations. 13

101.04 Definitions 13

102 - Bid, Award, and Execution of Contract 16

102 Bid, Award, and Execution of Contract 16

103 - Scope of Work 16

Deletions 16

104 - Control of Work 16

Deletions 16

104.06 Use of Roads by Contractor 16

105 - Control of Material 17

105.02 Material Sources. 17

105.02(a) Government-provided sources. 17

105.05 Use of Material Found in the Work. 17

106 - Acceptance of Work 17

106.07 Delete 17

107 - Legal Relations and Responsibility to the Public 18

107.05 Responsibility for Damage Claims. 18

107.06 Contractor's Responsibility for Work. 18

107.09 Legal Relationship of the Parties. 18

107.10 Environmental Protection. 18

108 - Prosecution and Progress 19

108 Delete. 19

109 - Measurement and Payment 19
109 Deletions 19
109.02 Measurement Terms and Definitions. 19
155 - Schedules for Construction Contracts 20
155 Delete. 20
202 - Additional Clearing and Grubbing 20
202.04 Selective Clearing. 20
203 - Removal of Structures and Obstructions 20
203.05 Disposing of Material 20
204 - Excavation and Embankment 21
204.11 Compaction. 21
209 - Structure Excavation and Backfill 22
209.10 Backfill. 22
308 - Minor Crushed Aggregate 23
625 - Turf Establishment ..... **Error! Bookmark not defined.**
625 - Turf Establishment 25
718 - Traffic Signing and Marking Material 26
718.05 Aluminum Panels 26

Preface

Preface_wo_03_15_2004_m

Delete all but the first paragraph and add the following:

The Forest Service, US Department of Agriculture has adopted FP-03 for construction of National Forest System Roads.

101 - Terms, Format, and Definitions

101.00_nat_us_07_25_2005

101.01_nat_us_01_22_2009

101.01 Meaning of Terms

Delete all references to the TAR (Transportation Acquisition Regulations) in the specifications.

101.03_nat_us_06_16_2006

101.03 Abbreviations.

Add the following to (a) Acronyms:

AFPA	American Forest and Paper Association
MSHA	Mine Safety and Health Administration
NIST	National Institute of Standards and Technology
NESC	National Electrical Safety Code
WCLIB	West Coast Lumber Inspection Bureau

Add the following to (b) SI symbols:

mp	Milepost
ppm	Part Per Million

101.04_nat_us_03_29_2007

101.04 Definitions.

Delete the following definitions and substitute the following:

Bid Schedule--The Schedule of Items.

Bridge--No definition.

Contractor--The individual or legal entity contracting with the Government for performance of prescribed work. In a timber sale contract, the contractor is the "purchaser".

Culvert--No definition.

Right-of-Way--A general term denoting (1) the privilege to pass over land in some particular line (including easement, lease, permit, or license to occupy, use, or traverse public or private lands), or (2) Real property necessary for the project, including roadway, buffer areas, access, and drainage areas.

Add the following:

Adjustment in Contract Price--"Equitable adjustment," as used in the Federal Acquisition Regulations, or "construction cost adjustment," as used in the Timber Sale Contract, as applicable.

Change--"Change" means "change order" as used in the Federal Acquisition Regulations, or "design change" as used in the Timber Sale Contract.

Design Quantity--"Design quantity" is a Forest Service method of measurement from the FS-96 *Forest Service Specifications for the Construction of Roads and Bridges.* Under these FP specifications this term is replaced by the term "Contract Quantities".

Forest Service--The United States of America, acting through the Forest Service, U.S. Department of Agriculture.

Neat Line--A line defining the proposed or specified limits of an excavation or structure.

Pioneer Road--Temporary construction access built along the route of the project.

Purchaser--The individual, partnership, joint venture, or corporation contracting with the Government under the terms of a Timber Sale Contract and acting independently or through agents, employees, or subcontractors.

Protected Streamcourse--A drainage shown on the plans or timber sale area map that requires designated mitigation measures.

Road Order--An order affecting and controlling traffic on roads under Forest Service jurisdiction. Road Orders are issued by a designated Forest Officer under the authorities of 36 CFR, part 260.

Schedule of Items--A schedule in the contract that contains a listing and description of construction items, quantities, units of measure, unit price, and amount.

Utilization Standards--The minimum size and percent soundness of trees described in the specifications to determine merchantable timber.

Add Figure 101-1—Illustration of road structure terms:

Figure 101-1—Illustration of road structure terms.

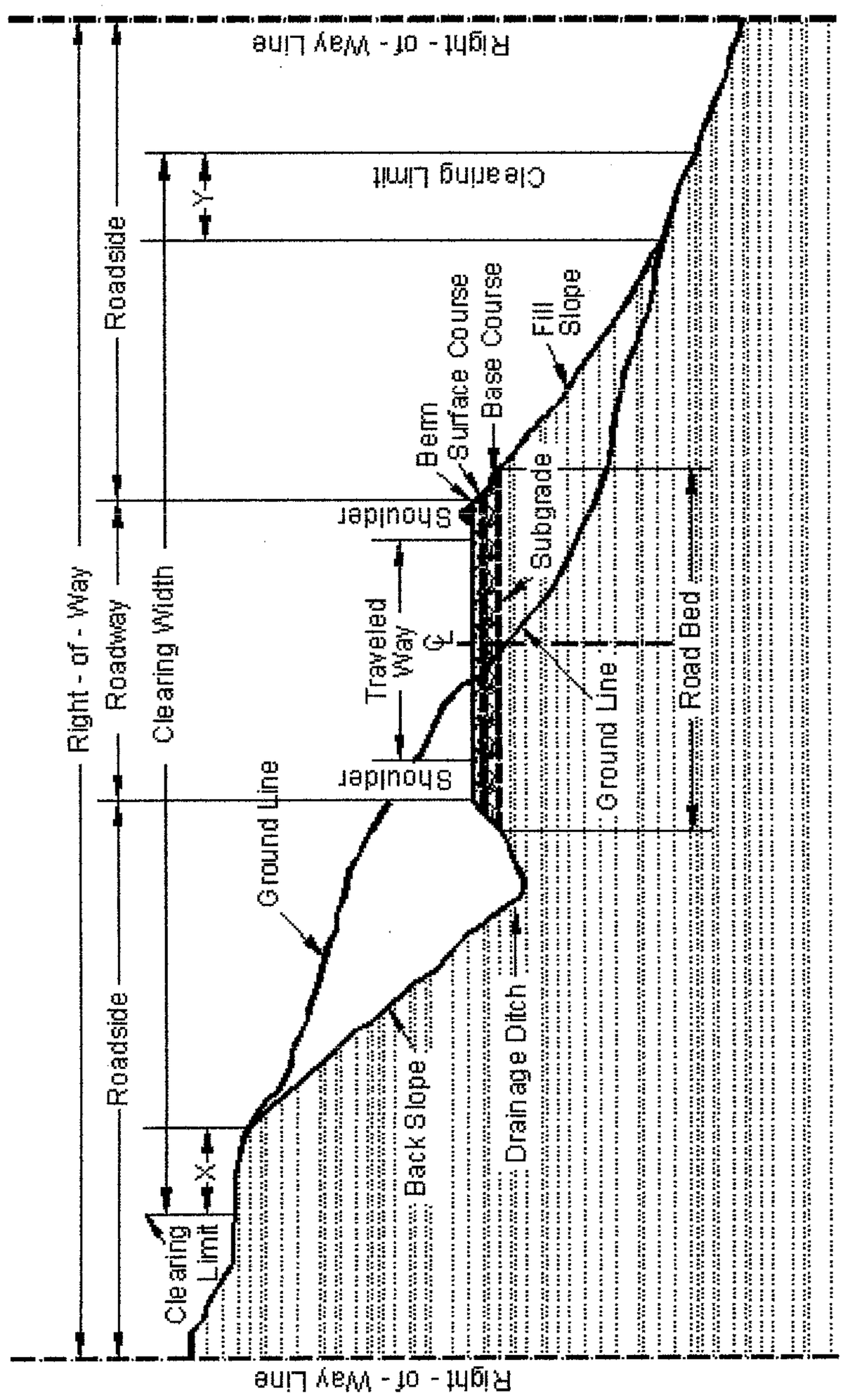

102 - Bid, Award, and Execution of Contract

102.00_nat_us_02_16_2005

102 Bid, Award, and Execution of Contract

Delete Section 102 in its entirety.

103 - Scope of Work

103.00_nat_us_02_16_2005

Deletions

Delete all but subsection 103.01 Intent of Contract.

104 - Control of Work

104.00_nat_us_06_16_2006

Deletions

Delete Sections 104.01, 104.02, and 104.04.

104.06_nat_us_02_17_2005

Add the following subsection:

104.06 Use of Roads by Contractor

The Contractor is authorized to use roads under the jurisdiction of the Forest Service for all activities necessary to complete this contract, subject to the limitations and authorizations designated in the Road Order(s) or described in the contract, when such use will not damage the roads or national forest resources, and when traffic can be accommodated safely.

105 - Control of Material

105.02_nat_us_01_18_2007

105.02 Material Sources.

105.02(a) Government-provided sources.

Add the following:

Comply with the requirements of 30 CFR 56, subparts B and H. Use all suitable material for aggregate regardless of size unless otherwise designated. When required, re-establish vegetation in disturbed areas according to section 625.

105.05_nat_us_05_12_2004

105.05 Use of Material Found in the Work.

Delete 105.05 (a) and (b) and the last sentence of the second paragraph and substitute the following:

Materials produced or processed from Government lands in excess of the quantities required for performance of this contract are the property of the Government. The Government is not obligated to make reimbursement for the cost of producing these materials.

106 - Acceptance of Work

106.07_nat_us_05_11_2004

106.07 Delete

Delete subsection 106.07.

107 - Legal Relations and Responsibility to the Public

107.05_nat_us_05_11_2004

107.05 Responsibility for Damage Claims.

Delete the entire subsection.

107.06_nat_us_06_16_2006

107.06 Contractor's Responsibility for Work.

Delete the following from the first paragraph.

"except as provided in Subsection 106.07".

107.09_nat_us_06_16_2006

107.09 Legal Relationship of the Parties.

Delete the entire subsection.

107.10_nat_us_06_16_2006

107.10 Environmental Protection.

Add the following:

Design and locate equipment repair shops, stationary refueling sites, or other facilities to minimize the potential and impacts of hazardous material spills on Government land.

Before beginning any work, submit a Hazardous Spill Plan. List actions to be taken in the event of a spill. Incorporate preventive measures to be taken, such as the location of mobile refueling facilities, storage and handling of hazardous materials, and similar information. Immediately notify the CO of all hazardous material spills. Provide a written narrative report form no later than 24 hours after the initial report and include the following:

- Description of the item spilled (including identity, quantity, manifest number, and other identifying information).
- Whether amount spilled is EPA or state reportable, and if so whether it was reported, and to whom.
- Exact time and location of spill including a description of the area involved.
- Containment procedures.
- Summary of any communications the Contractor had with news media, Federal, state and local regulatory agencies and officials, or Forest Service officials.
- Description of clean-up procedures employed or to be employed at the site including final disposition and disposal location of spill residue.

When available provide copies of all spill related clean up and closure documentation and correspondence from regulatory agencies.

The Contractor is solely responsible for all spills or leaks that occur during the performance of this contract. Clean up spills or leaks to the satisfaction of the CO and in a manner that complies with Federal, state, and local laws and regulations.

108 - Prosecution and Progress

108.00_nat_us_02_16_2005

108 Delete.

Delete Section 108 in its entirety.

109 - Measurement and Payment

109.00_nat_us_02_17_2005

109 Deletions

Delete the following entire subsections:

109.06 Pricing of Adjustments.

109.07 Eliminated Work.

109.08 Progress Payments.

109.09 Final Payment.

109.02_nat_us_06_16_2006

109.02 Measurement Terms and Definitions.

(b) Contract quantity.

Add the following:

Contract quantities will be adjusted only when there are errors in the original design of 15% or more.

Change the following:

"(b) Cubic yard" to "(c) Cubic yard".

Add the following definition:

(p) Thousand Board Feet (Mbf). 1,000 board feet based on nominal widths, thickness, and extreme usable length of each piece of lumber or timber actually incorporated in the job. For glued laminated timber, 1,000 board feet based on actual width, thickness, and length of each piece actually incorporated in the job.

155 - Schedules for Construction Contracts

155.00_nat_us_05_11_2004

155 Delete.

Delete Section 155 in its entirety.

202 - Additional Clearing and Grubbing

202.04_1005_us_08_01_2005

202.04 Selective Clearing.

Add the following:

Dead trees over 6 inches in diameter measured at 12 inches above the ground that lean toward the road and are tall enough to reach the roadbed are designated for cutting.

When marked in advance, remove hazard trees or unstable live trees over 6 inches in diameter measured at 12 inches above the ground that lean toward the road and are tall enough to reach the roadbed.

203 - Removal of Structures and Obstructions

203.05_nat_us_02_18_2005

203.05 Disposing of Material.

Add the following:

(e) Windrowing Construction Slash. Place construction slash outside the roadway in neat, compacted windrows approximately parallel to and along the toeline of embankment slopes. Do not permit the top of the windrows to extend above subgrade. Use construction equipment to matt down all material in a windrow to form a compact and uniform pile. Construct breaks of at least 15 feet at least every 200 feet in a windrow. Do not place windrows against trees. Obtain approval for pioneer roads. A pioneer road may be constructed to provide an area for placement of windrows, provided the excavated material is kept within the clearing limits and does not adversely affect the road construction.

(f) Scattering. Scatter construction slash outside the clearing limits without damaging trees. Limb all logs. Place logs and stumps away from trees, positioned so they will not roll, and are not on top of one another. Limb and scatter other construction slash to reduce slash concentrations.

(g) Chipping or Grinding. Use an approved chipping machine to grind slash and stumps greater than 3 inches in diameter and longer than 3 feet. Deposit chips or ground woody material on embankment slopes or outside the roadway to a loose depth less than 6 inches. Minor amounts of chips or ground woody material may be permitted within the roadway if they are thoroughly mixed with soil and do not form a layer.

(h) Debris Mat. Use tree limbs, tops, cull logs, split stumps, wood chunks, and other debris to form a mat upon which construction equipment is operated. Place stumps upside down and blend stumps into the mat.

(i) Decking Firewood Material. Remove brush from decks. Limb and deck logs that do not meet Utilization Standards according to Subsection 201.04 as directed by the CO. Cut logs to lengths less than 30 feet. Ensure that logs stacks are stable and free of brush and soil.

(j) Removal to designated locations. Remove construction slash to designated locations.

(k) Piling. Pile construction slash in designated areas. Place and construct piles so that if the piles are burned, the burning will not damage remaining trees. Keep piles free of dirt from stumps. Cut unmerchantable logs into lengths of less than 20 feet.

(l) Placing Slash on Embankment Slopes. Place construction slash on completed embankment slopes to reduce soil erosion. Place construction slash as flat as practicable on the completed slope. Do not place slash closer than 2 feet below subgrade. Priority for use of available slash is for: (1) through fills; (2) insides of curves; and (3) ditch relief outlets.

(m) Hydrological Sensitive Placement. Where required use this method in combination with other designated methods to dispose of material to reduce erosion and to aid in re-vegetation:

1. Place windrow segments on contours, wrap in type I geotextile.
2. Place logs as log erosion barriers on contours. Place logs so that 80% of their length is on the ground surface.
3. Scatter slash on bare or disturbed areas within or outside the clearing limits as directed.
4. Scatter chips or ground woody material on bare or disturbed areas within or outside the clearing limits as directed.

Place stumps in swales or on sites to form planting pockets. Place windrow segments on contours, wrap in type I geotextile.

204 - Excavation and Embankment

204.11_nat_us_04_11_2005

204.11 Compaction.

Delete the first paragraph and replace it with the following:

For compaction according to method (a), (b), or (c), use AASHTO T 27 to determine the amount of material retained on a Number. 4 sieve. For compaction methods (d) or (e) no sieve test is required.

Add the following compaction methods:

(d) Layer Placement Method (Hauling and Spreading Equipment). Place material by end dumping to the minimum depth needed for operation of spreading equipment. Level and smooth each embankment layer before placing the next layers. Operate hauling and spreading equipment uniformly over the full width of each layer. Construct a solid embankment with adequate compaction by working smaller rock and fines in with the larger rocks to fill the voids, and by operating hauling and spreading equipment uniformly over the full width of each layer as the embankment is constructed.

(e) Layer Placement (Roller Compaction) Method. Place material by end dumping to the minimum depth needed for operation of spreading equipment. Adjust the moisture content of the material to obtain a mass that will not visibly deflect under the load of the hauling and spreading equipment. Operate compaction equipment over the full width of each layer until visible deformation of the layer ceases or, in when a sheepsfoot roller is used, the roller "walks out" of the layer. Make at least three complete passes.

209 - Structure Excavation and Backfill

209.10_nat_us_10_23_2007

209.10 Backfill.

(a) General.

Add the following:

Replace any pipe that is distorted by more than 5 percent of nominal dimensions, or that is ruptured or broken.

Do not place or backfill pipe that meets any of the following conditions until the excavation and foundation have been approved in writing by the CO:

- Embankment height greater than 6 feet at subgrade centerline.
- Installation in a protected streamcourse.
- Round pipe with a diameter of 48 inches or greater.
- Pipe arches with a span of 50 inches or greater.
- Any box culvert of structure other than pipe culverts.

(b) Pipe culverts.

(1) Pipe culverts with compacted backfill.

Add the following:

Excavate an area on each side of the pipe as needed to effectively achieve compaction requirements. Backfill without damaging or displacing the pipe. Complete backfilling of the trench with suitable material.

308 - Minor Crushed Aggregate

308.00_01_us_10_11_2006

Delete section 308 in its entirety and replace with the following:

Description

308.01 This work consists of placing Government furnished aggregate or furnishing and placing crushed aggregate for bedding, backfill and roadway aggregate course.

Material

308.02 Conform to the following Subsections:

Crushed aggregate	703.06
Water	725.01

Construction Requirements

308.03 Preparing Surface. Prepare the roadway surface on which aggregate course is placed as shown on the plans.

308.04 Placing Crushed Aggregate.

(a) Roadway aggregate. Mix the aggregate and adjust the moisture content to obtain a uniform mixture with a moisture content suitable for compaction. Spread and shape the mixture on the prepared surface in a uniform layer.

Do not place the mixture in a layer exceeding 6 inches in compacted thickness. When more than one layer is necessary, compact each layer according to Subsection 308.05(a) before placing the next layer.

(b) Bedding and backfill aggregate. Place and shape the mixture in layers that, when compacted, do not exceed 6 inches in depth.

308.05 Compacting and Finishing Crushed Aggregate.

(a) Roadway aggregate. Compact using the methods below, specified in the Schedule of Items.

(1) Method 1. Operate equipment over the full width of spread aggregate.

(2) Method 2. Compact the aggregate by operating compaction equipment over the total width until visible deformation ceases. A minimum of three complete roller passes shall be made at a moisture content suitable for compaction.

(b) **Bedding and backfill aggregate**. Compact in 6 inch lifts by using a Forest Service approved mechanical compactor until no visible deformation is observed over the entire area of aggregate.

308.06 Acceptance. Crushed aggregate will be evaluated under Subsections 106.02 and 106.03. Furnish a production certification including gradation and quality properties for each source.

Construction of roadway aggregate courses will be evaluated under Subsections 106.02 and 106.04. Method 2 compaction will be evaluated under Section 106.04.

Placement of bedding and backfill aggregate will be evaluated under Subsection 106.02 and Section 209.

Preparation of the surfaces on which crushed aggregate is placed will be evaluated under Section 303 and 209 as applicable.

Measurement

308.07 Measure the Section 308 items listed in the bid schedule according to Subsection 109.02 and the following as applicable.

Measure crushed aggregate by the cubic yard in-place on the road.

Measure width horizontally to include the top of aggregate width including designed widenings. Measure the length horizontally along the centerline of the roadway.

Payment

308.08 The accepted quantities will be paid at the contract price per unit of measurement for the Section 308 pay item listed in the bid schedule. Payment will be full compensation for the work prescribed in this Section. See Subsection 109.05.

308.05_0803_us_03_20_2012

308.05 Compacting and Finishing Crushed Aggregate.

Delete second paragraph and add the following:

(1) **Method 1.** Compact each layer according to Subsection 204.11. Roll from the sides to the center, parallel to the centerline or the road. Along the curbs, headers, and walls, and all places not accessible to the roller. Compact the material with approved tampers until no more visible displacement, using a minimum of three passes.

625 - Turf Establishment

625.06 Fertilizing

(a) Dry method or (b) Hydraulic method: Add the following

Fertilzer shall be uniformly applied at the rate of 1000 lbs per ac and shall have

A chemical analysis of 10% Nitrogen, 10% Phosphorus, 10% Potassium

625.07 Seeding (a) Dry method

Remove the last sentence "Lightly compact the seedbed within 24 hours after seeding."

625.07 Seeding

Add the following:

:

Modified from Table 6-A (Seeding Mixtures for Erosion Control Plantings); Georgia Best Management Practices

For all seed mixes, planting depth <1/4 inch. Seeding rates are for broadcast seeding.

Fall Plantings

Source	Species	Seeding Rate lb./acre		Timing Peidmont	Fertilizer Pounds (10-10-10)	Comments
GA BMP	Crimson clover	15	bulk	Sept. 1 to Feb 15	500	Well drained clayey or loamy soils. Inoculate clover.
	Hairy Vetch	15	bulk			Tolerates lower soil pH.
	Wheat	60	bulk			
GA BMP	Arrowleaf or crimson clover	15	bulk	Sept. 1 to Feb 15	500	Well drained sandy or loamy soils. Inoculate clover.
	Perennial ryegrass	15	bulk			**Use annual rye when possible.**
	Wheat	40	bulk			
GA BMP	White clover (Dutch or Ladino)	5	bulk	Sept. 1 to Feb. 15	500	Well drained clayey or loamy soils. Perennial clover
	Red clover	10	bulk			can persist for several years. Inoculate clover seed.
	Perennial ryegrass	15	bulk			Maintaining pH above 6.0 is critical.
	Annual rye	30	bulk			
	Wheat	30	bulk			

Spring Plantings

GA BMP	Perennial ryegrass	20	bulk	Feb. 15 to April 1	500	****For areas with high soil erosion concern.** Low
	Partridge pea	2	PLS			maintenance, reseeding annuals.
GA BMP	Bahiagrass	25	bulk	April 1 to August 31	500	****For areas with high soil erosion concern.**
	Brown Top Millet	25	bulk			
Alternative	Spring oats or brown top millet	30 /25	bulk	April 1 to June 15 or	0	Perennial cover with cover crop, seeding depth <1/4"
with natives	Switchgrass 'Alamo'	3	PLS	dormant season		
	Big bluestem 'KY ecotype' or 'Kaw'	4	PLS	from Dec. 1 thru		
	Indiangrass 'Americus' or 'KY ecotype'	4	PLS	Feb.		

625.08 Mulching

Add the following:

Mulch shall be applied at the following rates:

Hay or straw @ the rate of 4,000 pounds per acr, wood cellulose @ the rate of 1500 pounds per acre.

718 - Traffic Signing and Marking Material

718.05_nat_us_08_05_2009

718.05 Aluminum Panels

Delete the third paragraph and replace with the following:

Clean, degrease and properly prepare the panels according to methods recommended by the sheeting manufacturer. Conversion coatings will conform to ASTM B-921 or ASTM B-449.