BIG THORNE STEWARDSHIP SPECIFIED ROADS

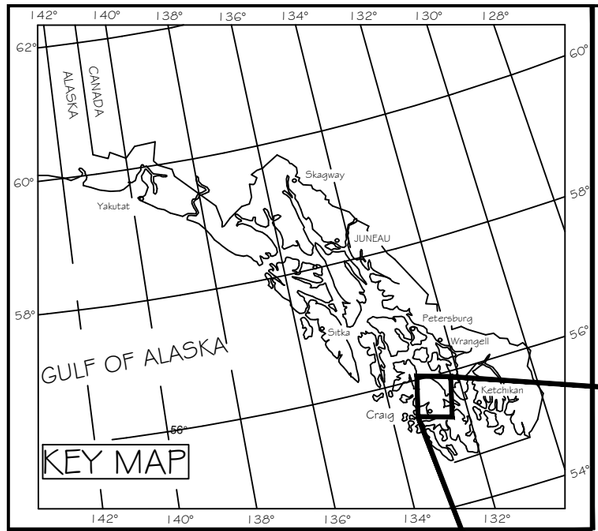

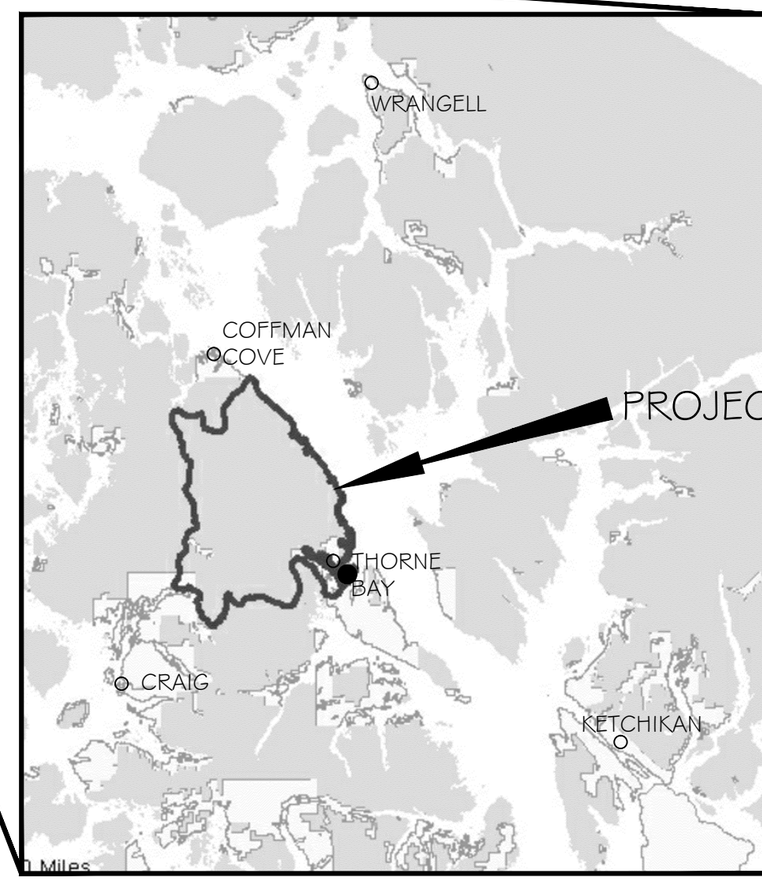

VICINITY MAP

INDEX TO SHEETS

NO.	DESCRIPTION
1	TITLE SHEET
2-4	PROJECT AREA MAPS
5	DESCON SHALE MAPPED
6-13	SUMMARY OF ESTIMATED QUANTITIES
14-21	ROAD WORK LISTS
22	BRIDGE REHABILITATION WORKLISTS
23-25	BRIDGE REHABILITATION DETAILS
26-36	ROAD CONSTRUCTION TYPICALS

RECOMMENDED

DISTRICT RANGER DATE

RECOMMENDED

FOREST ENGINEER DATE

APPROVED

FOREST SUPERVISOR DATE

TONGASS ENGINEERING & RECREATION

DESIGNED:	DATE:	DATE:	REVISION:	BY:
DRAWN: r.jacobson	DATE: 07/14			
REVIEWED: Q. Smith	DATE: 07/14			
TNFTYP:09/04				

BIG THORNE STEWARDSHIP SPECIFIED ROADS

USDA FOREST SERVICE - TONGASS NATIONAL FOREST
R-10 - THORNE BAY RANGER DISTRICT

TITLE SHEET

PLOT ON 11"X17" PAPER

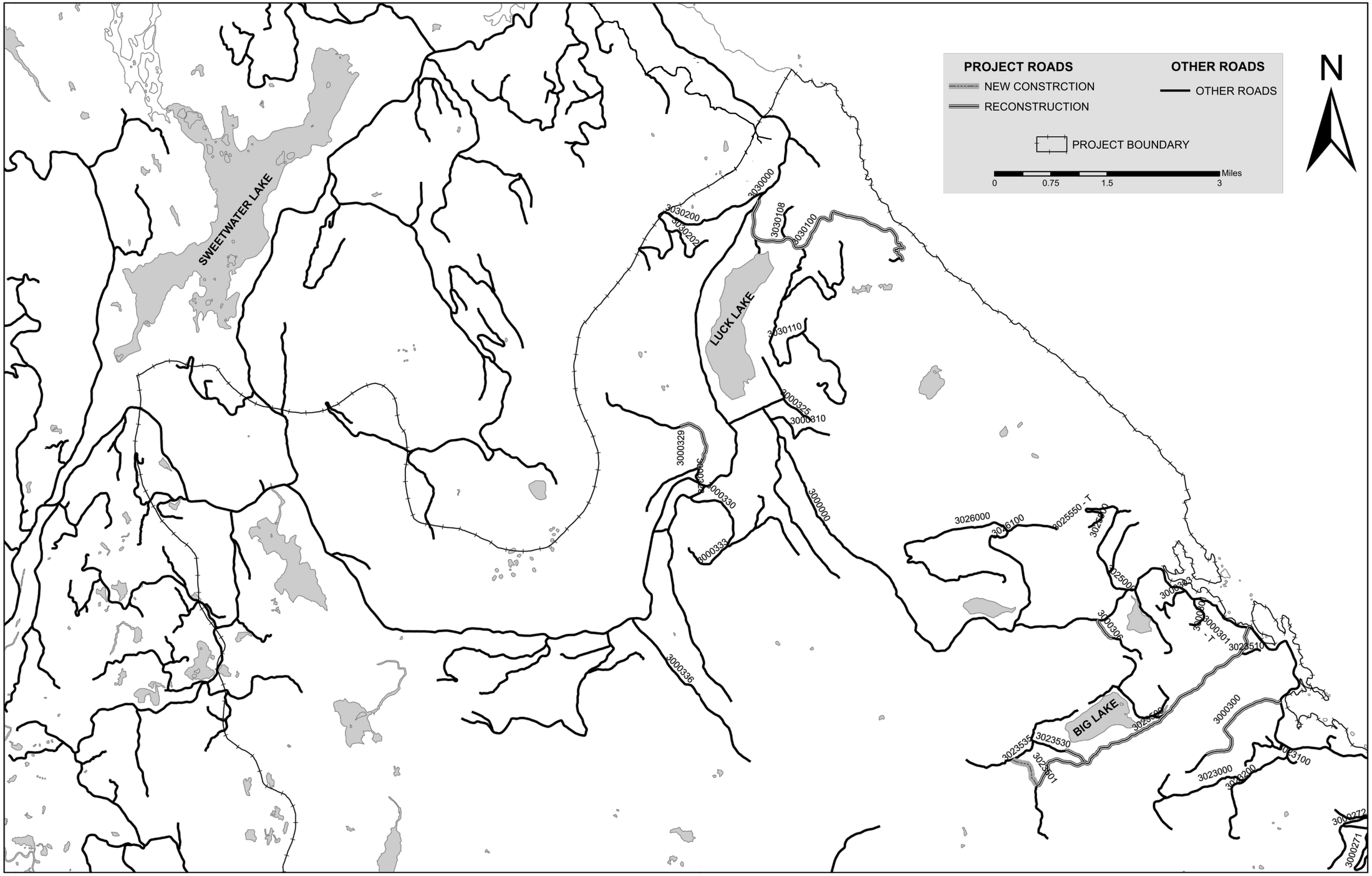

TONGASS ENGINEERING & RECREATION	DESIGNED: X. XXXXXXX	DATE: XX/XX/XX	DATE:	REVISION:	BY:	FOREST SERVICE U.S. DEPARTMENT OF AGRICULTURE	BIG THORNE STEWARDSHIP ROADS	COFFMAN COVE AREA
	DRAWN: RJ	DATE: 07/02/13	XX/XX/XX	XXXXXXXXXX	X. XXXXXX		USDA FOREST SERVICE - TONGASS NATIONAL FOREST R-10 - THORNE BAY RANGER DISTRICT	2_COFFMAN_COVE_AREA.DWG PLOT ON 11"X17" PAPER
	REVIEWED:	DATE:	XX/XX/XX	XXXXXXXXXXXXX	X.XXXXXX			SH. 2 of 35
	TNFTYP:02/05		XX/XX/XX	XXXXXXXXXXXXX	X. XXXXXX			

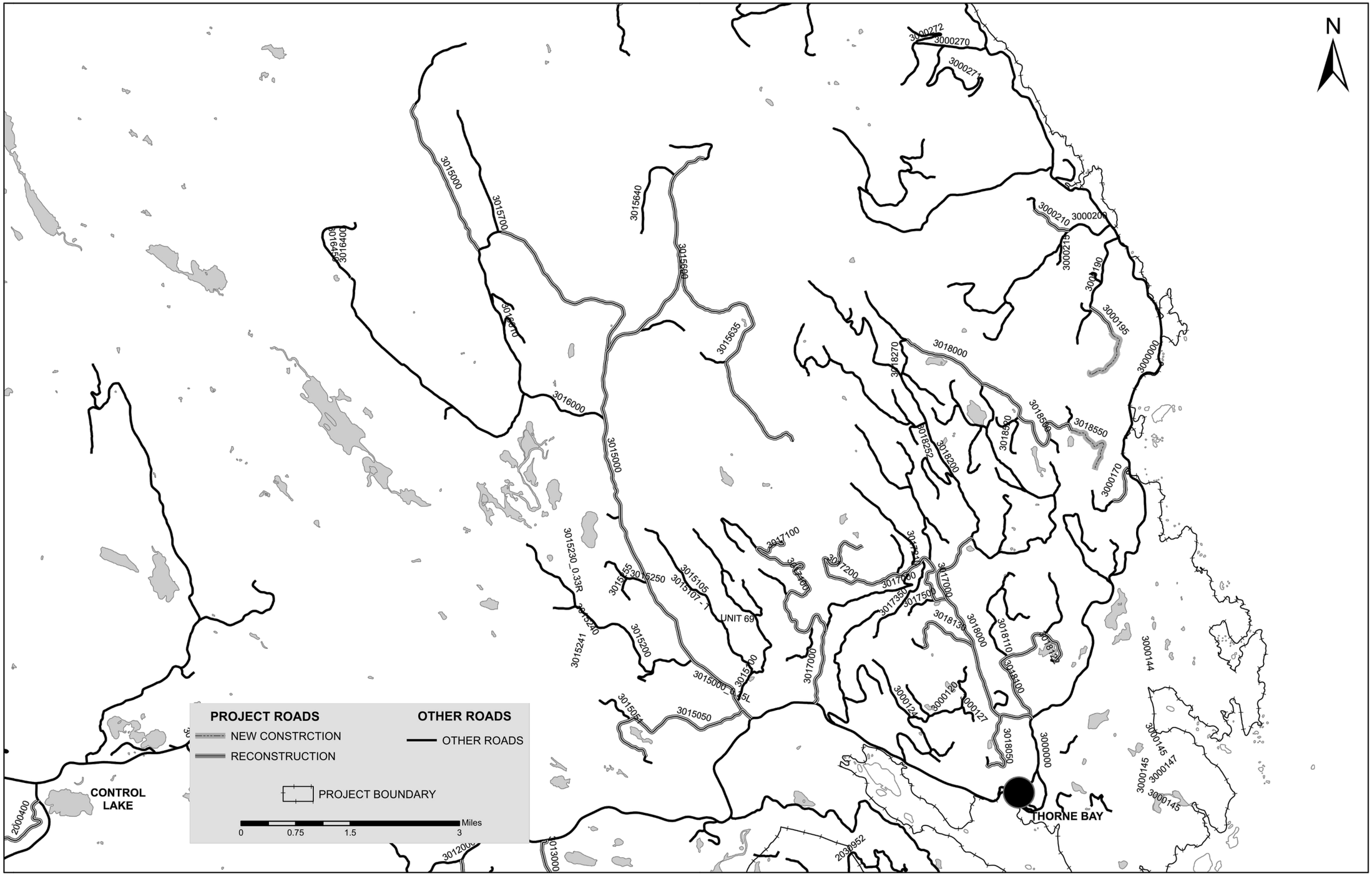

TONGASS ENGINEERING & RECREATION	DESIGNED: X. XXXXXXX	DATE: XX/XX/XX	DATE:	REVISION:	BY:	FOREST SERVICE U.S. DEPARTMENT OF AGRICULTURE	BIG THORNE STEWARDSHIP ROADS	NORTH THORNE AREA
	DRAWN: RJ	DATE: 07/02/13	XX/XX/XX	XXXXXXXXXX	X. XXXXXX		USDA FOREST SERVICE - TONGASS NATIONAL FOREST R-10 - THORNE BAY RANGER DISTRICT	3_NORTH_THORNE_AREA.DWG PLOT ON 11"X17" PAPER
	REVIEWED:	DATE:	XX/XX/XX	XXXXXXXXXXXX	X.XXXXXX			SH. 3 of 35
	TNFTYP:02/05		XX/XX/XX	XXXXXXXXXXXX	X. XXXXXX			

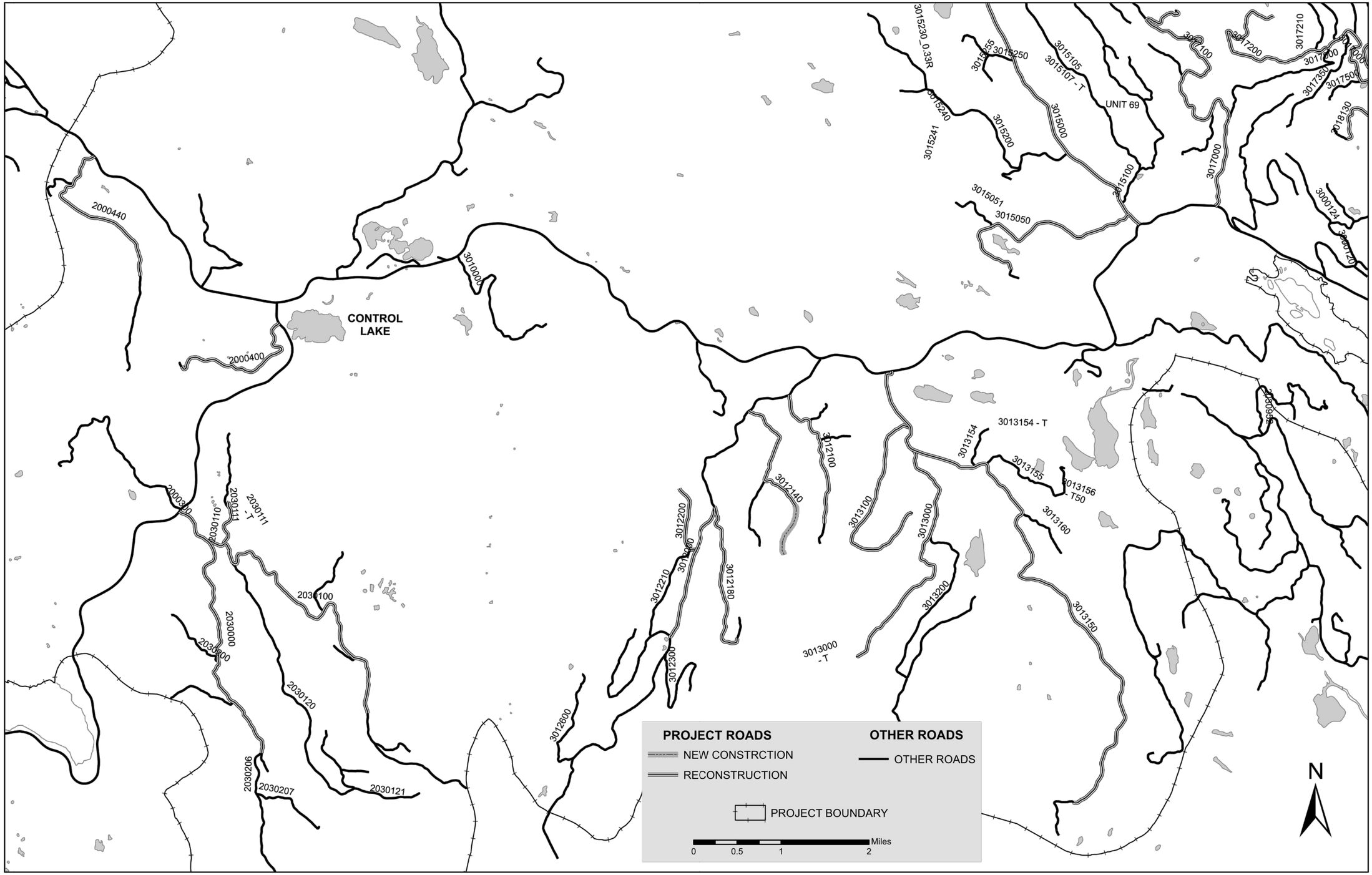

TONGASS ENGINEERING & RECREATION	DESIGNED: X. XXXXXXX	DATE: XX/XX/XX	DATE:	REVISION:	BY:	FOREST SERVICE U.S. DEPARTMENT OF AGRICULTURE	BIG THORNE STEWARDSHIP ROADS	STEELHEAD RUSH PEAK AREA
	DRAWN: RJ	DATE: 07/02/13	XX/XX/XX	XXXXXXXXXX	X. XXXXXX		USDA FOREST SERVICE - TONGASS NATIONAL FOREST R-10 - THORNE BAY RANGER DISTRICT	4_STEELHAED_RUSH_AREA.dwg PLOT ON 11"X17" PAPER
	REVIEWED:	DATE:	XX/XX/XX	XXXXXXXXXXXXX	X.XXXXXX			SH. 4 of 35
	TNFTYP:02/05		XX/XX/XX	XXXXXXXXXXXXX	X. XXXXXX			

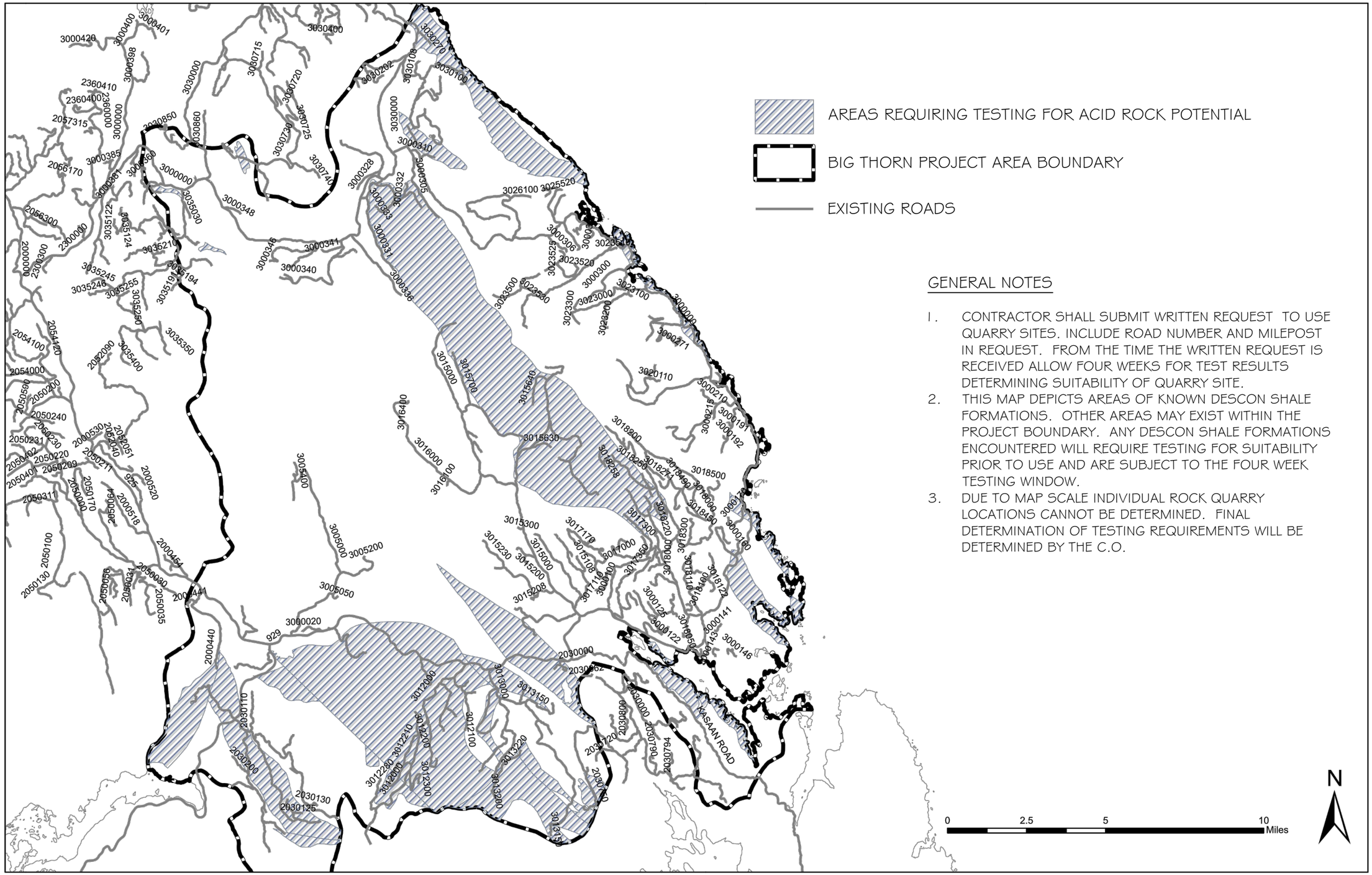

GENERAL NOTES

1. CONTRACTOR SHALL SUBMIT WRITTEN REQUEST TO USE QUARRY SITES. INCLUDE ROAD NUMBER AND MILEPOST IN REQUEST. FROM THE TIME THE WRITTEN REQUEST IS RECEIVED ALLOW FOUR WEEKS FOR TEST RESULTS DETERMINING SUITABILITY OF QUARRY SITE.
2. THIS MAP DEPICTS AREAS OF KNOWN DESCON SHALE FORMATIONS. OTHER AREAS MAY EXIST WITHIN THE PROJECT BOUNDARY. ANY DESCON SHALE FORMATIONS ENCOUNTERED WILL REQUIRE TESTING FOR SUITABILITY PRIOR TO USE AND ARE SUBJECT TO THE FOUR WEEK TESTING WINDOW.
3. DUE TO MAP SCALE INDIVIDUAL ROCK QUARRY LOCATIONS CANNOT BE DETERMINED. FINAL DETERMINATION OF TESTING REQUIREMENTS WILL BE DETERMINED BY THE C.O.

TONGASS ENGINEERING & RECREATION	DESIGNED: X. XXXXXXX	DATE: XX/XX/XX	DATE:	REVISION:	BY:	BIG THORNE STEWARDSHIP ROADS	DESCON SHALE MAPPED
	DRAWN: RJ	DATE: 07/02/13	XX/XX/XX	XXXXXXXXXX	X. XXXXXX	USDA FOREST SERVICE - TONGASS NATIONAL FOREST	5_Descon_Shale.dwg
	REVIEWED:	DATE:	XX/XX/XX	XXXXXXXXXXXXX	X.XXXXXX	R-10 - THORNE BAY RANGER DISTRICT	PLOT ON 11"X17" PAPER
	TNFTYP:02/05		XX/XX/XX	XXXXXXXXXXXXX	X. XXXXXX		SH.5 of 35

SUMMARY OF ESTIMATED QUANTITIES

ITEM NUMBER	DESCRIPTION	METHOD OF MEASUREMENT	UNIT	ROAD NUMBER					
				2000400	2000440	2030000	2030100	2030110	2030111
20351	Removal of Waterbars	AQ	EA	2				2	
20352	Removal of culverts	AQ	EA			1	5		
20401	Excavate Slide	LSQ	LS						
20404	Borrow excavation - cat finish, placement method 1	CQ	CY	160	300	10	70	660	58
20424	Haul	CQ	CY-MI	320	210	20	140	1320	116
23051	Roadway/Roadside Brushing	AQ	MILE		1.20				
25101	Placed riprap, class 4, method A	CQ	CY						
30311	Reconditioning of Roadbed, compaction B	AQ	MILE			0.21			
30357	Reconditioning of Roadway, compaction A	AQ	MILE	1.88					0.09
57102ts	Government Furnished TT Slab Bridge, Transport and Install	LSQ	LS		2				
57102	Government Furnished Bridge, Transport and Install	LSQ	LS					1	
57202NA	Log bridges - bridge stringers not adjacent to site	AQ	LF					40	
57203	Native Log Substructure	LSQ	LS					1	
58454	Native Log culvert - stringers not adjacent to site	AQ	LF						
62501	Seeding, dry method (without mulch)	CQ	ACRE	0.25	0.20	0.33	0.33	0.33	0.07
20401C	Excavation, Common, Ditching Placement Method 1	CQ	CY				5		
20429	End haul	CQ	CY						
6020118	18" Poly pipe Bell-Spigot Double Wall	AQ	LF	66		30	160	130	
6020124	24" Poly pipe Bell-Spigot Double Wall	AQ	LF						
6020136	36" Poly pipe Bell-Spigot Double Wall	AQ	LF						
6020148	48" Poly pipe Bell-Spigot Double Wall	AQ	LF						
Bridge_1.2	Bridge Rehabilitation	LSQ	LS		1				

SUMMARY OF ESTIMATED QUANTITIES

ITEM NUMBER	DESCRIPTION	METHOD OF MEASUREMENT	UNIT	ROAD NUMBER					
				3000170	3000195	3000195LG	3000210	3000300	3000306
20351	Removal of Waterbars	AQ	EA						1
20352	Removal of culverts	AQ	EA						
20401	Excavate Slide	LSQ	LS						
20404	Borrow excavation - cat finish, placement method 1	CQ	CY	1370	140		140	10	90
20424	Haul	CQ	CY-MI	1548	168		280	20	180
23051	Roadway/Roadside Brushing	AQ	MILE						
25101	Placed riprap, class 4, method A	CQ	CY						
30311	Reconditioning of Roadbed, compaction B	AQ	MILE						
30357	Reconditioning of Roadway, compaction A	AQ	MILE	0.58			0.59	1.48	0.40
57102ts	Government Furnished TT Slab Bridge, Transport and Install	LSQ	LS						
57102	Government Furnished Bridge, Transport and Install	LSQ	LS						
57202NA	Log bridges - bridge stringers not adjacent to site	AQ	LF				45		
57203	Native Log Substructure	LSQ	LS						
58454	Native Log culvert - stringers not adjacent to site	AQ	LF				16		
62501	Seeding, dry method (without mulch)	CQ	ACRE	0.25	0.30				0.30
2120120	Linear Grading, 0-20%	AQ	MILE			0.50			
2120140	Linear Grading, 20-40%	AQ	MILE			0.45			
20401C	Excavation, Common, Ditching Placement Method 1	CQ	CY	72				3	
20429	End haul	CQ	CY	10					
6020118	18" Poly pipe Bell-Spigot Double Wall	AQ	LF	180	210	540	34	30	
6020124	24" Poly pipe Bell-Spigot Double Wall	AQ	LF	30		60			
6020136	36" Poly pipe Bell-Spigot Double Wall	AQ	LF			32			
6020148	48" Poly pipe Bell-Spigot Double Wall	AQ	LF						

SUMMARY OF ESTIMATED QUANTITIES

ITEM NUMBER	DESCRIPTION	METHOD OF MEASUREMENT	UNIT	ROAD NUMBER					
				3000329	3012000	3012100	3012140	3012140LG	3012180
20351	Removal of Waterbars	AQ	EA						
20352	Removal of culverts	AQ	EA	1	10	1	2		
20401	Excavate Slide	LSQ	LS						
20404	Borrow excavation - cat finish, placement method 1	CQ	CY	20	730	20	180		310
20424	Haul	CQ	CY-MI	10	876	40	360		310
23051	Roadway/Roadside Brushing	AQ	MILE	0.90					1.80
25101	Placed riprap, class 4, method A	CQ	CY						60
30311	Reconditioning of Roadbed, compaction B	AQ	MILE		0.19	1.73	1.50		1.80
30357	Reconditioning of Roadway, compaction A	AQ	MILE						
57102ts	Government Furnished TT Slab Bridge, Transport and Install	LSQ	LS						
57102	Government Furnished Bridge, Transport and Install	LSQ	LS						
57202NA	Log bridges - bridge stringers not adjacent to site	AQ	LF						
57203	Native Log Substructure	LSQ	LS						
58454	Native Log culvert - stringers not adjacent to site	AQ	LF		55				
62501	Seeding, dry method (without mulch)	CQ	ACRE		0.25	1.25	1.25		
2120120	Linear Grading, 0-20%	AQ	MILE						
2120140	Linear Grading, 20-40%	AQ	MILE					0.13	
2120155	Linear Grading, 40-55%	AQ	MILE					0.30	
2120180	Linear Grading, 55-80%	AQ	MILE					0.15	
20401C	Excavation, Common, Ditching Placement Method 1	CQ	CY	352	5				100
20429	End haul	CQ	CY		280				70
6020118	18" Poly pipe Bell-Spigot Double Wall	AQ	LF	30	300	30	90	390	240
6020124	24" Poly pipe Bell-Spigot Double Wall	AQ	LF		92			180	
6020136	36" Poly pipe Bell-Spigot Double Wall	AQ	LF					30	36

SUMMARY OF ESTIMATED QUANTITIES

ITEM NUMBER	DESCRIPTION	METHOD OF MEASUREMENT	UNIT	ROAD NUMBER					
				3012200	3013000	3013100	3013150		
20351	Removal of Waterbars	AQ	EA						
20352	Removal of culverts	AQ	EA		6	1	1		
20207	Hazard Tree Removal	AQ	EA		1				
20404	Borrow excavation - cat finish, placement method 1	CQ	CY	3265	60	160	60		
20424	Haul	CQ	CY-MI	810	120	320	120		
23051	Roadway/Roadside Brushing	AQ	MILE						
25101	Placed riprap, class 4, method A	CQ	CY				50		
30311	Reconditioning of Roadbed, compaction B	AQ	MILE			2.53			
30357	Reconditioning of Roadway, compaction A	AQ	MILE	0.80					
57102ts	Government Furnished TT Slab Bridge, Transport and Install	LSQ	LS	1					
57102	Government Furnished Bridge, Transport and Install	LSQ	LS	1					
57202NA	Log bridges - bridge stringers not adjacent to site	AQ	LF						
57203	Native Log Substructure	LSQ	LS	1					
58454	Native Log culvert - stringers not adjacent to site	AQ	LF						
62501	Seeding, dry method (without mulch)	CQ	ACRE	0.60	2	2	2		
Bridge_1.5	Bridge Rehabilitation	LSQ	LS	1					
2120140	Linear Grading, 20-40%	AQ	MILE						
2120155	Linear Grading, 40-55%	AQ	MILE						
20401C	Excavation, Common, Placement Method 1	CQ	CY						
60708	Clean Plugged Culvert/Catch Basin	AQ	EA			12			
60710	Culvert Repairs Inlets and/or Outlets	AQ	EA		2	2			
65101	Pit Development	AQ	EA	1					
6020118	18" Poly pipe Bell-Spigot Double Wall	AQ	LF	390	120	120	30		
6020124	24" Poly pipe Bell-Spigot Double Wall	AQ	LF	30	60	30			
6020136	36" Poly pipe Bell-Spigot Double Wall	AQ	LF						

SUMMARY OF ESTIMATED QUANTITIES

ITEM NUMBER	DESCRIPTION	METHOD OF MEASUREMENT	UNIT	ROAD NUMBER					
				3015000	3015050	3015600	3015635	3017000	3017100
20351	Removal of Waterbars	AQ	EA				2		
20352	Removal of culverts	AQ	EA		2			2	1
20401	Excavate Slide	LSQ	LS				1		
20404	Borrow excavation - cat finish, placement method 1	CQ	CY	513	640	380	70	250	30
20424	Haul	CQ	CY-MI	513	1280	760	100	500	60
23051	Roadway/Roadside Brushing	AQ	MILE	2.28					
25101	Placed riprap, class 4, method A	CQ	CY						
30311	Reconditioning of Roadbed, compaction B	AQ	MILE						
30357	Reconditioning of Roadway, compaction A	AQ	MILE			1.81	3.95		
57102ts	Government Furnished TT Slab Bridge, Transport and Install	LSQ	LS	1					
Bridge_1.6	Bridge Rehabilitation	LSQ	LS			1			
Bridge_1.8	Bridge Rehabilitation	LSQ	LS					1	
58454	Native Log culvert - stringers not adjacent to site	AQ	LF	38		19			
62501	Seeding, dry method (without mulch)	CQ	ACRE	0.25		0.25	0.30	0.40	0.10
20401C	Excavation, Common, Placement Method 1	CQ	CY	50	21			60	
20429	End haul	CQ	CY						
60708	Clean Plugged Culvert/Catch Basin	AQ	EA		11	3			
60710	Culvert Repairs Inlets and/or Outlets	AQ	EA						2
65101	Pit Development	AQ	EA						
6020118	18" Poly pipe Bell-Spigot Double Wall	AQ	LF	826	125	60		30	30
6020124	24" Poly pipe Bell-Spigot Double Wall	AQ	LF	360		34		30	
6020136	36" Poly pipe Bell-Spigot Double Wall	AQ	LF	98					
6020148	48" Corrugated Metal Pipe	AQ	LF	30					
6020184	84" Corrugated Metal Pipe	AQ	LF	48					

SUMMARY OF ESTIMATED QUANTITIES

ITEM NUMBER	DESCRIPTION	METHOD OF MEASUREMENT	UNIT	ROAD NUMBER					
				3017200	3018000	3018050	3018100	3018122	3018130
20351	Removal of Waterbars	AQ	EA						
20352	Removal of culverts	AQ	EA		3				
20401	Excavate Slide	LSQ	LS						
20404	Borrow excavation - cat finish, placement method 1	CQ	CY	20	1514	115	4588	210	110
20424	Haul	CQ	CY-MI	40	1514	250	4588	315	220
23051	Roadway/Roadside Brushing	AQ	MILE	1.84		1.05			1.14
25101	Placed riprap, class 4, method A	CQ	CY					40	
30311	Reconditioning of Roadbed, compaction B	AQ	MILE						
30357	Reconditioning of Roadway, compaction A	AQ	MILE		1.34		1.70	0.54	
57102ts	Government Furnished TT Slab Bridge, Transport and Install	LSQ	LS						1
57102	Government Furnished Bridge, Transport and Install	LSQ	LS						
57202NA	Log bridges - bridge stringers not adjacent to site	AQ	LF					70	
58454	Native Log culvert - stringers not adjacent to site	AQ	LF						
62501	Seeding, dry method (without mulch)	CQ	ACRE					0.35	0.94
Bridge_1.1	Bridge Rehabilitation	LSQ	LS						1
2120140	Linear Grading, 20-40%	AQ	MILE						
20401C	Excavation, Common, Placement Method 1	CQ	CY			7			5
20429	End haul	CQ	CY						
60708	Clean Plugged Culvert/Catch Basin	AQ	EA		2	2	2		
60710	Culvert Repairs Inlets and/or Outlets	AQ	EA						
65101	Pit Development	AQ	EA						
6020118	18" Poly pipe Bell-Spigot Double Wall	AQ	LF	30	120		370	30	
6020124	24" Poly pipe Bell-Spigot Double Wall	AQ	LF				30		
6020136	36" Poly pipe Bell-Spigot Double Wall	AQ	LF		34				
6020148	48" Corrugated Metal Pipe	AQ	LF						

SUMMARY OF ESTIMATED QUANTITIES

ITEM NUMBER	DESCRIPTION	METHOD OF MEASUREMENT	UNIT	ROAD NUMBER					
				3018500		3018550LG	3023500	3023501LG	3023530
20351	Removal of Waterbars	AQ	EA	2					
20352	Removal of culverts	AQ	EA						
20401	Excavate Slide	LSQ	LS				3		
20404	Borrow excavation - cat finish, placement method 1	CQ	CY	1845			410	566	1043
20424	Haul	CQ	CY-MI	461			615	362	469
23051	Roadway/Roadside Brushing	AQ	MILE				0.55		
25101	Placed Rip Rap. Class 4, Method A	CQ	CY				80		
30311	Reconditioning of Roadbed, compaction B	AQ	MILE	0.58					
30357	Reconditioning of Roadway, compaction A	AQ	MILE			0.12			
57102ts	Government Furnished TT Slab Bridge, Transport and Install	LSQ	LS						
57102	Government Furnished Bridge, Transport and Install	LSQ	LS				1		
Bridge_1.7	Bridge Rehabilitation	LSQ	LS				1		
58454	Native Log culvert - stringers not adjacent to site	AQ	LF				19		19
62501	Seeding, dry method (without mulch)	CQ	ACRE	0.30			1.87		0.20
2120120	Linear Grading, 0-20%	AQ	MILE			0.67		0.05	
2120140	Linear Grading, 20-40%	AQ	MILE			0.11		0.16	
2120155	Linear Grading, 40-55%	AQ	MILE			0.05		0.13	
2120180	Linear Grading, 55-80%	AQ	MILE			0.05		0.04	
57203	Native Log Substructure	LSQ	LS				1		
20401C	Excavation, Common, Placement Method 1	CQ	CY				5		
65101	Pit Development	AQ	LF	1					
6020118	18" Poly pipe Bell-Spigot Double Wall	AQ	LF	32		660	660	450	30
6020124	24" Poly pipe Bell-Spigot Double Wall	AQ	LF				60	60	
6020136	36" Poly pipe Bell-Spigot Double Wall	AQ	LF			30			

SUMMARY OF ESTIMATED QUANTITIES

ITEM NUMBER	DESCRIPTION	METHOD OF MEASUREMENT	UNIT	ROAD NUMBER					
				3030100					
20207	Hazard Tree Removal	AQ	EA						
20352	Removal of culverts	AQ	EA	2					
20401	Excavate Slide	LSQ	LS						
20404	Borrow excavation - cat finish, placement method 1	CQ	CY	90					
20424	Haul	CQ	CY-MI	180					
23051	Roadway/Roadside Brushing	AQ	MILE	0.60					
25101	Placed riprap, class 4, method A	CQ	CY						
30311	Reconditioning of Roadbed, compaction B	AQ	MILE						
30357	Reconditioning of Roadway, compaction A	AQ	MILE	1.60					
57102ts	Government Furnished TT Slab Bridge, Transport and Install	LSQ	LS						
57102	Government Furnished Bridge, Transport and Install	LSQ	LS						
57202NA	Log bridges - bridge stringers not adjacent to site	AQ	LF						
58454	Native Log culvert - stringers not adjacent to site	AQ	LF	10					
62501	Seeding, dry method (without mulch)	CQ	ACRE	1.10					
2120120	Linear Grading, 0-20%	AQ	MILE						
2120140	Linear Grading, 20-40%	AQ	MILE						
2120155	Linear Grading, 40-55%	AQ	MILE						
2120180	Linear Grading, 55-80%	AQ	MILE						
20401C	Excavation, Common, Placement Method 1	CQ	CY						
20429*	End haul	CQ	CY						
60708	Clean Plugged Culvert/Catch Basin	AQ	EA	2					
60710	Culvert Repairs Inlets and/or Outlets	AQ	EA						
6020118	18" Poly pipe Bell-Spigot Double Wall	AQ	LF	30					
6020124	24" Poly pipe Bell-Spigot Double Wall	AQ	LF						
6020136	36" Poly pipe Bell-Spigot Double Wall	AQ	LF	36					

ROAD WORK LISTS
2000400, 2000440, 2030000, 2030100, 2030110, 2030111

Road 2000400

MP	Description
0	Start Roadway Reconditioning
0.4	Repair road - 10CY Borrow
1.1	Repair road - 10CY Borrow
1.17	Repair road - 10CY Borrow
1.21	Repair road - 10CY Borrow
1.29	Repair road - 15CY Borrow
	Install 18" X 30' CPP, 15 CY Borrow
1.31	Repair road - 10CY Borrow
1.36	Repair road - 10CY Borrow
1.4	Repair road - 10CY Borrow
1.47	Repair road - 10CY Borrow

STA	Description
0+00 = MP 1.65	Continue Roadway Reconditioning
	Fill Waterbar, 10 CY Borrow
7+40	Install 18" X 36' CPP, 30 CY Borrow
8+50	Fill Waterbar, 10 CY Borrow
11+90 = MP 1.88	EOP, End Reconditioning

Road 2000440

MP	Description
0.5	Start Brushing
1.7	End Brushing

STA	Description
0+00 = MP 1.9	Install 40' Gov. Furnished Bridge, 150 CY Borrow
	(40' Glulam from Thorne Bay Sort Yard), Fish
	Timing June 25 - Sept 1
9+00	Install 40' Gov. Furnished Bridge, 150 CY Borrow
	(40' Glulam from Thorne Bay Sort Yard), Fish
	Timing June 25 - Sept 1
13+00 = MP 2.15	EOP

Road 2030000

MP	Description
0.000	BOP
0.280	Blade bridge approaches, 150' each side
0.840	Begin Blading
0.950	End Blading
1.460	Blade 200' ahead
2.960	Remove 18" CMP
	Install 18" X 30' CPP
3.320	EOP

Road 2030100

MP	Description
1.310	BOP
	Remove Existing 18" CMP
	Install 18" X 30' CPP, 10 CY Borrow
1.430	Remove Existing 18" CMP
	Install 18" X 30' CPP, 10 CY Borrow
1.500	Remove Existing 18" CMP
	Install 18" X 30' CPP, 10 CY Borrow
	Clean 50' of ditch
1.600	Remove Existing 18" CMP
	Install 18" X 30' CPP, 10 CY Borrow
1.710	Remove Existing 18" CMP
	Install 18" X 40' CPP, 10 CY Borrow
	Repair Road, 10 CY Borrow
1.790	Repair Road, 10 CY Borrow
3.640	EOP

Road 2030110

STA	Description
0+00 = MP 0.12	Install 40' Log Bridge, 300 CY Borrow
	(Stringers from Rd 3030710 @ MP 0.91), Fish
	Timing June 25 - Sept 1
1+60	Install 60' Gov. Furnished Bridge, 300 CY Borrow
	(60' Modular Bridge from Rd 3030720 @ MP 1.18)
	Requires Native Log Substructure, Fish Timing
	June 25 - Sept 1
6+35	Install 18" X 34' CPP, 10 CY Borrow
7+25	Fill Waterbar, 10 CY Borrow
11+65	Install 18" X 28' CPP, 10 CY Borrow
14+60	Install 18" X 32' CPP, 10 CY Borrow
16+40	Install 18" X 36' CPP, 10 CY Borrow
17+70	Fill Waterbar, 10 CY Borrow
18+90 = MP 0.48	IS w/2030111, right
	EOP

Road 2030111

STA	Description
18+90 = MP 0.00	Reconditioning of Roadbed
	Repair Road - 58 CY Borrow
23+50 = MP 0.09	EOP
	End Reconditioning

ROAD WORK LISTS
3000170, 3000195, 3000195 New Construction, 3000210, 3000300, 3000306, 3000329

Road 3000170

STA	Description
0+00 = MP 0.00	BOP
	Install 18" X 30' CPP, 10 CY Borrow
	Begin Roadway Reconditioning
	Begin 1' lift, 1270 CY Borrow
3+30	Install 18" X 30' CPP, 5 CY Borrow
7+00	Existing Log Culvert
7+90	Install 18" X 30' CPP, 5 CY Borrow
8+45	Repair Road, 10 CY Borrow
9+90	Install 18" X 30' CPP, 5 CY Borrow
11+90	Install 24" X 30' CPP, 10 CY Borrow
16+50	Begin Ditching
18+25	End Haul 10 CY Slide Material
18+70	Repair Road, 10 CY Borrow
19+05	Install 18" X 30' CPP, 5 CY Borrow
19+75	Repair Road, 5 CY Borrow
21+25	Sidecast Boulders, 20CY
25+80	Install 18" X 30' CPP, 5 CY Borrow
27+20	Repair Road, 20 CY Borrow
28+30	Repair Road, 10 CY Borrow
30+60 = MP 0.58	EOP
	End ditching, End Reconditioning
	Totals

Road 3000195

STA	Description
0+00 = MP 0.00	BOP
0+20	Install 18" X 30' CPP, 10 CY Borrow
6+15	Repair Road, 10 CY Borrow
6+80	Install 18" X 30' CPP, 20 CY Borrow
9+30	Install 18" X 30' CPP, 10 CY Borrow
10+40	Repair Road, 10 CY Borrow
12+65	Install 18" X 30' CPP, 10 CY Borrow
14+10	Repair Road, 10 CY Borrow
15+20	Install 18" X 30' CPP, 15 CY Borrow
16+58	Install 18" X 30' CPP, 10 CY Borrow
22+65	Install 18" X 30' CPP, 15 CY Borrow
22+90	Repair Road, 20 CY Borrow
24+20 = MP 0.46	EOP

3000195 New Construction

STATION	DESCRIPTION
0+00 = MP 0.46	Begin Linear Grading
2+20	Install 18" X 30' CPP
4+12	Install 24" X 30' CPP
6+23	Install 18" X 30' CPP
10+35	Install 18" X 30' CPP
12+28	Install 18" X 30' CPP
14+43	Install 18" X 30' CPP
15+00	Install 18" X 30' CPP
16+15	Install 18" X 30' CPP
17+20	Install 18" X 30' CPP
18+38	Install 36" X 32' CPP
19+78	Install 18" X 30' CPP
21+20	Install 18" X 30' CPP
22+85	Install 18" X 30' CPP
27+35	Install 18" X 30' CPP
28+44	Install 18" X 30' CPP
31+45	Install 18" X 30' CPP
33+30	Install 18" X 30' CPP
35+65	Install 18" X 30' CPP
39+75	Install 24" X 30' CPP
41+30	Install 18" X 30' CPP
44+80	Install 18" X 30' CPP
50+20 = MP 1.41	E.O.P. End Linear grading

Road 3000300

STA	Description
0+00 = MP 0.00	IS w/3000000
	Begin Roadway Reconditioning
0+47	Sidecast Boulder Barrier
13+70	Existing 18" CPP
	Construct Ditch Block
15+62	Existing 18" CPP
	Clean inlet, construct ditch block
17+60	Install 18" X 30' CPP
18+55	Existing 18" CPP
	Clean inlet, construct ditch block
35+40	Existing 18" CPP
	Clean inlet, construct ditch block
78+00 = MP 1.48	EOP

Road 3000306

STA	Description
0+00 = MP 0.00	Begin Roadway Reconditioning
0+50	Fill Waterbar, 10 CY Borrow
15+60	Repair road - 30CY Borrow
16+30	Repair road - 30CY Borrow
17+00	Repair road - 20CY Borrow
21+50 = MP 0.40	EOP: End Reconditioning

Road 3000210

STA	Description
0+00 = MP 0.00	BOP
	Begin Roadway Reconditioning
0+32	Install 18" X 34' CPP, 10 CY Borrow
0+40	Repair Road, 10 CY Borrow
2+00	16' Log Culvert, 30 CY Borrow
16+70	Install 45' Log Bridge, 80 CY Borrow, Fish Timing June 25 - Sept 1
26+32	Repair Road, 10 CY Borrow
31+35 = MP 0.59	EOP

Road 3000329

MP	Description
0.000	BOP
	Begin Mechanical Brushing
	Begin Ditching
0.610	Remove Existing 18" CMP
	Install 18" X 30' CPP, 10 CY Borrow
0.710	Repair Road, 10 CY Borrow
0.900	End Brushing, Ditching
	EOP

ROAD WORK LISTS
3012000, 3012100, 3012140, 3012140 NEW CONSTRUCTION, 3012180

Road 3012000

MP	Description
2.6	Remove Log Culvert
	Install 24" X 32' CPP, 10 CY Borrow
3.1	Remove Existing Log Culvert
	Install 18" X 30' CPP, 10 CY Borrow
3.2	Install 18" X 30' CPP
3.49	Remove Existing Log Culvert
	Install Log Culvert, 12', Fish Timing June 15 -Sept 1
3.5	Remove Existing Log Culvert
	Install Log Culvert, 10', Fish Timing June 15 -Sept 1
3.52	Remove Existing Log Culvert
	Install Log Culvert, 15', Fish Timing June 15 -Sept 1
3.55	Remove Existing Log Culvert
	Install Log Culvert, 18', Fish Timing June 15 -Sept 1
3.65	Remove Existing Log Culvert
	Install 18" X 30' CPP, 10 CY Borrow
3.7	Remove Existing Log Culvert
	Install 18" X 30' CPP, 10 CY Borrow
3.8	Remove Exisiting Log Culvert
	Install 18" X 30' CPP, 10 CY Borrow
3.9	Install 18" X 30' CPP, 10 CY Borrow
4.05	Install 18" X 30' CPP, 10 CY Borrow
	Ditching, 75'

STA	Description
0+00 = MP 4.05	Begin End Haul Slide, 280 CY
	Begin Roadbed Reconditioning
	Place 1' cap to EOP, 610 CY Borrow
0+50	Install 24" X 30' CPP, 10 CY Borrow
1+18	End Slide Material
1+48	Install 18" X 30' CPP, 10 CY Borrow
2+90	Remove Log Culvert
	Install 24" X 30' CPP, 10 CY Borrow
5+87	Install 18" X 30' CPP, 10 CY Borrow
8+67	Install 18" X 30' CPP, 10 CY Borrow
9+50	IS w/3012280, right
9+93 = MP 4.24	EOP
	End 1' cap, Reconditioning

Road 3012100

MP	Description
0.000	BOP
	Begin Roadway Reconditioning
1.053	Remove Existing 18" CMP
	Install 18" X 30' CPP, 10 CY Borrow
1.098	Repair Road, 10 CY Borrow
1.730	EOP
	End Roadway Reconditioning

Road 3012140

MP	Description
0.000	BOP
	Begin Roadway Reconditioning
1.017	Repair Road, 50 CY Borrow
1.250	Repair Road, 30 CY Borrow
1.366	Reconstruct 275' of Ditch (Roadway Recond.)
	Remove Existing 18" CMP
	Install 18" X 30' CPP, 10 CY Borrow
1.384	Clean CMP Inlet/Reconstruct Catch Basin (RR)
1.390	Install 18' X 30' CMP, 10 CY Borrow
1.420	Repair Road, 30 CY Borrow
	Remove Existing 18" CMP
	Install 18" X 30' CPP, 10 CY Borrow
1.450	Sidecast Slide Material, 40 CY
1.466	Clean CMP Inlet/Reconstruct Catch Basin (RR)
1.500	EOP
	End Roadway Reconditioning

3012140 NEW CONSTRUCTION

STATION	DESCRIPTION
0+00 = MP 0.00	Begin Linear Grading
2+55	Install 24" X 30' CPP
5+75	Install 18" X 30' CPP
6+20	Install 18" X 30' CPP
7+80	Install 18" X 30' CPP
9+00	Install 18" X 30' CPP
9+70	Install 24" X 30' CPP
10+40	Install 18" X 30' CPP
11+10	Install 18" X 30' CPP
12+40	Install 18" X 30' CPP
13+65	Install 18" X 30' CPP
14+75	Install 18" X 30' CPP
15+80	Install 24" X 30' CPP
16+20	Install 18" X 30' CPP
18+35	Install 18" X 30' CPP
22+65	Install 24" X 30' CPP
24+00	Install 18" X 30' CPP
25+20	Install 18" X 30' CPP
26+30	Install 24" X 30' CPP
27+90	Install 36" X 30' CPP
30+45	Install 24" X 30' CPP
30+85 = MP 0.58	E.O.P. End Linear Grading

Road 3012180

STA	Description
0+00 = MP 0.00	BOP
	Begin Roadbed Reconditioning
	Begin Mech. Brushing
1+90	Remove 100 CY Slide Material
	Repair Road, 30 CY Borrow
2+30	Install 18" X 30' CPP, 5 CY Borrow
5+20	Install 18" X 40' CPP, 10 CY Borrow
7+00	Install 18" X 40' CPP, 10 CY Borrow
14+98	Install 18" X 30' CPP, 5 CY Borrow
19+10	Install 18" X 30' CPP, 5 CY Borrow
22+86	Begin Repair Slide
	60 CY placed Rip Rap, 150 CY Borrow
23+96	End Repair Slide
24+20	End Haul Slide Material
25+04	End Haul Slide Material
32+06	Install 18" X 40' CPP, 10 CY Borrow
33+59	End Haul Site
50+52	Install 18" X 30' CPP, 5 CY Borrow
63+11	Install 36" X 36' CPP
	Repair Road, 80 CY Borrow
95+04 = MP 1.80	EOP, End Reconditioning, Brushing

ROAD WORK LISTS
3012200, 3013000, 3013100, 3013150, 3015000

Road 3012200

STA	Description
0+00 = MP 0.00	BOP
2+00	Install 80' Gov. Furnished Bridge, 300 CY Borrow (80' Modular from RD 3030720, MP 0.035) Fish timing June 25 - Sept 1 Native Log Substructure
	Begin Roadway Reconditioning
3+70	Place 1' cap to EOP, 2525 CY Borrow IS w/3012210, left
7+00	Install 21' Gov Furnished Bridge, 300 CY Borrow (21' Glulam from Thorne Bay Sort Yard) Fish timing June 25 - Sept 1
8+22	Install 18" X 30" CPP, 10 CY Borrow
11+24	Install 18" X 30" CPP, 10 CY Borrow
13+70	Install 18" X 30" CPP, 10 CY Borrow
15+86	Install 18" X 30" CPP, 10 CY Borrow
17+24	Install 18" X 30" CPP, 10 CY Borrow
19+14	Install 18" X 30" CPP, 10 CY Borrow
22+15	Install 18" X 30" CPP, 10 CY Borrow
23+57	Pit Development Location
25+75	Install 18" X 30" CPP, 10 CY Borrow
28+58	Install 18" X 30" CPP, 10 CY Borrow
29+96	Install 18" X 30" CPP, 10 CY Borrow
34+64	Install 18" X 30" CPP, 10 CY Borrow
37+50	Install 18" X 30" CPP, 10 CY Borrow
40+43	Install 18" X 30" CPP, 10 CY Borrow
42+94	Install 24" X 30" CPP, 10 CY Borrow
44+16 = MP 0.84	EOP, End reconditioning

Road 3013000

MP	Description
0.000	BOP
0.170	Remove Existing 24" CMP
	Install 24" X 30' CPP, 10 CY BORROW
0.290	Remove Existing 18" CMP
	Install 18" X 30' CPP, 10 CY BORROW
0.390	Repair Damaged Outlet, 36" CMP
0.520	Remove Existing 24" CMP
	Install 24" X 30' CPP, 10 CY BORROW
0.590	Remove Existing 18" CMP
	Install 18" X 30' CPP, 10 CY BORROW
2.565	Remove Hazard Tree
2.810	Repair Inlet, Reconstruct Catch Basin, 18" CMP
3.280	Remove Existing 18" CMP
	Install 18" X 30' CPP, 10 CY BORROW
3.700	Remove Existing 18" CMP
	Install 18" X 30' CPP, 10 CY BORROW
4.130	EOP

Road 3013100

MP	Description
0.000	BOP
	Begin Roadway Reconditioning
0.180	Existing 18" CMP, Reconstruct Catch Basin
0.286	Existing 18" CMP, Reconstruct Catch Basin
0.420	Existing 18" CMP, Reconstruct Catch Basin
0.729	Install 24" X 30' CPP, 10 CY Borrow
0.770	Existing 18" CMP, Reconstruct Catch Basin
0.810	Existing 18" CMP, Reconstruct Catch Basin
0.900	Existing 18" CMP, Reconstruct Catch Basin
0.930	Existing 18" CMP, Reconstruct Catch Basin
0.990	Existing 18" CMP, Reconstruct Catch Basin
	Repair CMP Inlet
1.570	Install 18" X 30' CPP, 10 CY Borrow
1.600	Repair Road, 10 CY Borrow
1.650	Repair Road, 20 CY Borrow
	Existing 24" CMP, Repair Inlet/Outlet
1.750	Existing 18" CMP, Reconstruct Catch Basin
1.790	Repair Road, 10 CY Borrow
	Install 18" X 30' CPP, 10 CY Borrow
1.850	Existing 18" CMP, Reconstruct Catch Basin
1.960	Existing 18" CMP, Reconstruct Catch Basin
	Repair Road, 40 CY Borrow
2.020	Existing 18" CMP, Reconstruct Catch Basin
2.080	Install 18" X 30' CPP, 10 CY Borrow
2.400	Remove Existing 18" CMP
	Install 18" X 30' CPP, 10 CY Borrow
2.490	Repair Road, 30 CY Borrow
2.530	EOP

Road 3013150

MP	Description
0.000	BOP
2.620	Stabilize Fill Slope, 50 CY Rip Rap
	Repair Road, 50 CY Borrow
2.660	Remove Existing 18" CMP
	Install 18" X 30' CPP, 10 CY Borrow
5.300	EOP

Road 3015000

STA	Description
0+00 = MP 9.11	BOP
	Begin Mechanical Brushing
0+49	Install 24" X 30' CPP, 10 CY Borrow
2+28	Install 48" X 30' CMP, 20 CY Borrow
3+83	Install 24" X 30' CPP, 10 CY Borrow
6+82	Install 18" X 30' CPP, 10 CY Borrow
9+40	Install 18" X 30' CPP, 10 CY Borrow
12+50	Install 24" X 30' CPP, 10 CY Borrow
14+35	Install 18" X 30' CPP, 10 CY Borrow
19+20	Install 19' Log Culvert, 10 CY Borrow, Fish timing June 15 - Sept 1
22+85	Install 18" X 30' CPP, 10 CY Borrow
25+81	Install 18" X 30' CPP, 10 CY Borrow
27+00	Install 19' Log Culvert, 10 CY Borrow, Fish timing June 15 - Sept 1
28+04	Install 18" X 30' CPP, 10 CY Borrow
30+98	Install 18" X 30' CPP, 10 CY Borrow
33+42	Install 18" X 30' CPP, 10 CY Borrow
36+56	Install 18" X 30' CPP, 10 CY Borrow
39+77	Install 24" X 30' CPP, 10 CY Borrow
43+47	Install 24" X 30' CPP, 10 CY Borrow
44+93	Install 24" X 30' CPP, 10 CY Borrow

Continued next page

ROAD WORK LISTS
3015000, 3015050, 3015600, 3015635

Road 3015000, Continued

STA	Description
50+54	Install 18" X 30' CPP, 10 CY Borrow
52+44	Install 18" X 30' CPP, 10 CY Borrow
54+35	Install 24" X 30' CPP, 10 CY Borrow
58+50	Install 18" X 30' CPP, 10 CY Borrow
60+80	Install 24" X 30' CPP, 10 CY Borrow
63+83	Install 18" X 30' CPP, 10 CY Borrow
70+71	Install 18" X 30' CPP, 10 CY Borrow
72+07	Install 36" X 30' CPP, 10 CY Borrow
73+00	Install 18" X 30' CPP, 10 CY Borrow
76+64	Install 24" X 30' CPP, 10 CY Borrow
79+99	Install 18" X 30' CPP, 10 CY Borrow
80+73	Install 18" X 40' CPP, 10 CY Borrow
82+06	Install 18" X 36' CPP, 10 CY Borrow
84+87	Install 18" X 30' CPP, 10 CY Borrow
88+12	Install 18" X 30' CPP, 10 CY Borrow
92+91	Install 18" X 30' CPP, 10 CY Borrow
95+60	Install 18" X 30' CPP, 10 CY Borrow
99+46	Install 18" X 30' CPP, 10 CY Borrow
101+73	Install 18" X 30' CPP, 10 CY Borrow
103+64	Install 40' Gov Furnished Bridge, 30 CY Borrow (40' Glulam from Thorne Bay Sort Yard), Fish timing June 15 - Sept 1
105+94	Install 84" X 48' CMP, 23 CY Borrow, Construction timing June 15 - Sept 1
108+50	Install 18" X 30' CPP, 10 CY Borrow
111+20	Install 36" X 36' CPP, 10 CY Borrow Sidecast Slide Material, 50 CY
111+90	Install 24" X 30' CPP, 10 CY Borrow
113+70	Install 24" X 30' CPP, 10 CY Borrow
114+70	Install 18" X 30' CPP, 10 CY Borrow
116+30	Install 24" X 30' CPP, 10 CY Borrow
117+40	Install 36" X 32' CPP, 10 CY Borrow
117+90	Install 18" X 30' CPP, 10 CY Borrow
120+50 = MP 11.39	EOP, End Mechanical Brushing

Road 3015050

MP	Description
0.000	BOP
0.100	Ditching, 250', 11 CY
0.151	Install 18" X 30' CPP, 10 CY Borrow
0.274	Repair Road, 10 CY Borrow
0.288	Remove Debris from 60" CMP Inlet, 5 CY
0.354	Repair Road, 10 CY Borrow
0.515	Existing 18" CMP, Clean Inlet/Outlet, 5 CY
0.560	Existing 18" CMP, Reconstruct Catch Basin
0.600	Existing 18" CMP, Reconstruct Catch Basin
0.710	Existing 18" CMP, Reconstruct Catch Basin
1.037	Existing 18" CMP, Reconstruct Catch Basin
1.142	Existing 24" CMP, Reconstruct Catch Basin
1.191	Remove Existing 18" CMP Install 18" X 35' CPP, 10 CY Borrow
1.287	Existing 18" CMP, Reconstruct Catch Basin
1.338	Remove Existing 18" CMP Install 18" X 30' CPP, 10 CY Borrow
1.455	Existing 24" CMP, Reconstruct Catch Basin
1.694	Existing 18" CMP, Reconstruct Catch Basin
1.72	Install 18" X 30' CPP, 10 CY Borrow
1.82	Existing 18" CMP, Reconstruct Catch Basin
2.16	Repair Road, 130 CY Borrow
2.282	Repair Road, 130 CY Borrow
2.366	Repair Road, 30 CY Borrow
2.4	Repair Road, 30 CY Borrow
2.432	Repair Road, 30 CY Borrow
2.5	Repair Road, 130 CY Borrow
2.59	Repair Road, 50 CY Borrow
2.636	Repair Road, 50 CY Borrow
2.64	EOP

Road 3015600

STA	Description
0+00 = MP 1.61	BOP Begin Reconditioning of Roadway
4+10	Install 18" X 30' CPP, 10 CY Borrow
8+75	Install 24" X 34' CPP, 10 CY Borrow Repair Road - 200 CY Borrow
15+50	Clean CMP Barrel, 24" Repair Road - 100 CY Borrow
25+80	Clean CMP Barrel, 18" Repair Road - 20 CY Borrow
66+70	Install 19' Log Culvert, Fish Timing June 15 -Sept 1
0+00 = MP 2.95	IS w/3015640 Left; Equation Station
5+30	Install 18" X 30' CPP, 10 CY Borrow
8+04	Clean CMP Barrel, 24" Repair Road - 30 CY Borrow
24+81 = MP 3.42	EOP, End Reconditioning

Road 3015635

MP	Description
0.000	BOP Begin Roadway Reconditioning
0.280	Repair Road, 10 CY Borrow
0.320	Repair Road, 10 CY Borrow
0.780	Existing 18" CMP, Reconstruct Catch Basin
1.190	Existing 18" CMP, Reconstruct Catch Basin
1.240	Existing 18" CMP, Reconstruct Catch Basin
2.320	Fill in Waterbars x 2, 20 CY Borrow
2.390	Existing 18" CMP, Reconstruct Catch Basin
2.450	Existing 18" CMP, Reconstruct Catch Basin
2.500	Existing 18" CMP, Reconstruct Catch Basin
2.640	Existing 18" CMP, Reconstruct Catch Basin
2.690	Sidecast Slide Material
2.770	Existing 18" CMP, Reconstruct Catch Basin
2.800	Existing 48" CMP, Reconstruct Catch Basin
2.870	Existing 18" CMP, Reconstruct Catch Basin Repair Road, 30 CY Borrow
2.930	Existing 18" CMP, Reconstruct Catch Basin
2.990	Existing 18" CMP, Reconstruct Catch Basin
3.950	EOP End Roadway Reconditioning

ROAD WORK LISTS
3017000, 3017100, 3017200, 3018000, 3018050, 3018100

Road 3017000

MP	Description
0.000	BOP
0.021	Repair Road, 30 CY Borrow
0.070	Begin Full Width 1' Lift, 200 CY Borrow
0.133	End Lift
0.330	Existing 18" CMP, Reconstruct lead-off ditch
0.358	Begin Ditching
	Remove Existing 24" CMP
	Install 24" X 30' CPP, 10 CY Borrow
0.424	End Ditching
0.701	Begin Ditching
0.718	Remove Existing 18" CMP
	Install 18" X 30' CPP, 10 CY Borrow
0.779	End Ditching
0.845	Sidecast 30 CY Slide
1.040	EOP

Road 3017100

MP	Description
0.000	BOP
	Remove Existing 18" CMP
	Install 18" X 30' CPP, 10 CY Borrow
1.464	Clean CMP Inlet, 24"
	Repair Damaged CMP Inlet
2.039	Repair Damaged CMP Inlet
2.248	Repair Road, 10 CY Borrow
2.340	Repair Road, 10 CY Borrow
2.590	Existing 18" CMP, Reconstruct Catch Basin
3.410	EOP

Road 3017200

MP	Description
0.00	BOP, Begin Mechanical Brushing
1.84	End Brushing
2.28	Remove Waterbar, 10 CY Borrow
2.29	Install 18" X 30' CPP, 10 CY Borrow
2.30	EOP

Road 3018000

MP	Description
0.000	BOP
2.840	Remove Existing 36" CMP
	Install 36" X 34' CPP, 10 CY Borrow
2.900	Install 18" X 30' CPP, 10 CY Borrow
2.990	Existing 18" CMP, Reconstruct Catch Basin
3.080	Remove Existing 18" CMP
	Install 18" X 30' CPP, 10 CY Borrow
3.220	Remove Existing 18" CMP
	Install 18" X 30' CPP, 10 CY Borrow
3.340	Begin Roadway Reconditioning
	Repair Road, 50 CY Borrow
3.358	Install 18" X 30' CPP, 20 CY Borrow
3.380	Repair Road, 10 CY Borrow
3.420	Repair Road, 40 CY Borrow
	End Roadway Reconditioning
7.690	Begin Roadway Reconditioning
8.500	Begin 1' rock lift, 1354 CY Borrow
8.950	End Roadway Reconditioning; End 1' rock lift; EOP

Road 3018050

MP	Description
0.000	BOP
	Begin Mechanical Brushing
0.140	Repair Road, 5 CY Borrow
0.210	Repair Road, 20 CY Borrow
0.220	Repair Road, 20 CY Borrow
0.230	Repair Road, 10 CY Borrow
0.350	Repair Road, 10 CY Borrow
0.390	Fill Tank Trap, 15 CY Borrow
	Existing 48" CMP
0.400	Repair Road, 10 CY Borrow
0.520	Existing 18" CMP, Clean Inlet
0.630	Repair Road, 10 CY Borrow
0.739	Repair Road, 10 CY Borrow
0.741	Ditching, 100', 7 CY
0.840	Existing 18" CMP, Clean Inlet/Outlet
0.950	Repair Road, 5 CY Borrow
0.990	Existing 18" CMP, Clean Inlet
1.050	EOP

Road 3018100

STA	Description
0+00 = MP 0.00	BOP
2+34	Begin Roadway Reconditioning
3+54	Install 18" X 30' CPP, 10 CY Borrow
3+99	IS w/spur, right
5+24	IS w/spur, right
5+59	Ditching
9+95	Install 18" X 30' CPP, 10 CY Borrow
15+07	Install 18" X 30' CPP, 10 CY Borrow
15+60	IS w/old pit, right
	Place 1' lift to EOP, 4458 CY Borrow
16+78	Install 18" X 30' CPP, 10 CY Borrow
21+43	Install 18" X 30' CPP, 10 CY Borrow
27+90	Install 18" X 30' CPP, 10 CY Borrow
28+58	Install 18" X 40' CPP, 10 CY Borrow
30+33	IS w/old pit, right
30+92	Clean CMP inlet
37+52	Clean CMP inlet
42+60	Install 18" X 30' CPP, 10 CY Borrow
44+33	Install 18" X 30' CPP, 10 CY Borrow
52+24	IS w/3018110, left
59+99	Install 18" X 30' CPP, 10 CY Borrow
64+04	IS w/3018100_1.23R
74+90	Install 18" X 30' CPP
79+50	Install 18" X 30' CPP, 10 CY Borrow
90+20	Install 24" X 30' CPP, 10 CY Borrow
91+00 = MP 1.72	EOP, IS w/3018122
	End Reconditioning
	Totals

ROAD WORK LISTS - 3018122, 3018130, 3018500, 3018550 NEW CONSTRUCTION, 3023500

Road 3018122

STA	Description
0+00 = MP 0.00	BOP
	Begin Roadway Reconditioning
0+90	Fill Waterbar, 10 CY Borrow
4+30	Install 30' Log Bridge; 20 CY Rip Rap; 50 CY Borrow; Fish Timing June 15 - Sept 1
7+60	Repair Road 320' back, 75 CY Borrow
10+20	Repair Road, 5 CY Borrow
12+70	Install 18" X 30' CPP, 10 CY Borrow
21+30	Install 40' Log Bridge; 20 CY Rip Rap; 60 CY Borrow; Fish Timing June 15 - Sept 1
28+51 = MP 0.54	EOP
	End Roadway Reconditioning

Road 3018130

STA	Description
0+00 = 0.00	BOP
	Begin Mechanical Brushing
0+25	Install 34' Gov. Furnished Bridge, 100 CY Borrow (34' Glulam from Thorne Bay Sort Yard), Fish Timing June 25 - Sept 1
30+25	Repair Slump in Road, 10 CY Borrow
37+70	Ditching, 50'
60+00 = MP 1.14	EOP
	End Brushing

Road 3018500

STA	Description
MP 0.00	Begin 1' lift 1755 CY; Begin Roadbed reconditioning
MP 0.58	End 1' lift; End Reconditioning
0+00 = MP 0.60	Install 18" X 32" CPP @ rockpit - 10 CY Borrow
0+25	Fill Waterbar - 10 CY Borrow
9+00	Fill Waterbar - 10 CY Borrow
32+30	Repair road - 10 CY Borrow
33+80	Repair road - 10 CY Borrow
35+80	Repair road - 10 CY Borrow
	Repair road - 10 CY Borrow
	Repair road - 10 CY Borrow
40+50	Repair road - 10 CY Borrow
73+95 = MP 1.42	EOP

ROAD 3018550 NEW CONSTRUCTION

STATION	DESCRIPTION
MP 0.00 - 0.12	Roadbed Reconditioning
0+00 = MP 0.12	Begin Linear Grading
0+10	Install 18" X 30' CPP
0+90	Install 18" X 30' CPP
4+65	Install 18" X 30' CPP
9+40	Install 18" X 30' CPP
10+42	Install 18" X 30' CPP
11+80	Install 18" X 30' CPP
12+90	Install 18" X 30' CPP
14+15	Install 18" X 30' CPP
14+95	Install 18" X 30' CPP
15+76	Install 18" X 30' CPP
18+95	Install 18" X 30' CPP
20+50	Install 18" X 30' CPP
21+43	Install 18" X 30' CPP
21+66	Install 18" X 30' CPP
22+32	Install 36" X 30' CPP
22+80	Install 18" X 30' CPP
24+94	Install 18" X 30' CPP
25+71	Install 18" X 30' CPP
29+73	Install 18" X 30' CPP
33+32	Install 18" X 30' CPP
34+55	Install 18" X 30' CPP
41+07	Install 18" X 30' CPP
42+40	Install 18" X 30' CPP
46+65 = MP 1.00	E.O.P. End Linear Grading

Road 3023500

MP	Description
0.90	Remove Sm Slide, Install 18" x 30 CPP, 30 CY Borrow
2.00	Remove Lg Slide, Install 18" x 30 CPP, 50 CY Borrow

STA	Description
0+00 = MP 3.06	BOP
0.06	IS w/3023530 (MP 3.06 3023500)
3+13	Install 24" X 30' CPP, 10 CY Borrow
4+75	Install 18" X 30' CPP, 10 CY Borrow
6+10	Install 24" X 30' CPP, 10 CY Borrow
	Begin Mechanical Brushing
7+36	Install 18" X 30' CPP, 10 CY Borrow
8+55	Install 18" X 30' CPP, 10 CY Borrow
	Remove Sm Slide
9+20	Install 18" X 30' CPP, 10 CY Borrow
13+80	Install 18" X 30' CPP, 10 CY Borrow
15+00	Install 18" X 30' CPP, 10 CY Borrow
17+65	Install 18" X 30' CPP, 10 CY Borrow
18+07	Install 18" X 30' CPP, 10 CY Borrow
19+26	Install 18" X 30' CPP, 10 CY Borrow
21+10	Install 18" X 30' CPP, 20 CY Borrow
22+38	Install 18" X 30' CPP, 20 CY Borrow
27+46	Install 18" X 30' CPP, 10 CY Borrow
	Begin Ditching
28+18	End Ditching
	Fill Hole, 10 CY Borrow
30+48	Install 18" X 30' CPP, 10 CY Borrow
32+30	Install 18" X 30' CPP, 10 CY Borrow
33+75	Install 18" X 30' CPP, 10 CY Borrow
35+00	End Brushing
36+65	Install 19' Log Culvert Fish Timing June 25 - Sept 1
38+07	Install 18" X 30' CPP, 10 CY Borrow
38+55	Install 18" X 30' CPP, 10 CY Borrow
40+22	Install 18" X 30' CPP, 10 CY Borrow
41+43	Install 18" X 30' CPP, 10 CY Borrow
46+22	Install 18" X 30' CPP, 10 CY Borrow
47+90	Install Gov't Furnished Modular Bridge, 80 CY Rip Rap, 80 CY Borrow, Fish Timing June 25 - Sept 1
48+65 = MP 3.98	EOP

ROAD WORK LISTS
3023501, 3023530, 3030100

Road 3023501 New Construction

STATION	DESCRIPTION
0+00 = MP 0.00	Begin one foot overlay, 496 CY Borrow
0+30	Install 18" X 30' CPP, 10cy Borrow
1+00	Install 18" X 30' CPP, 10cy Borrow
4+34	Install 18" X 30' CPP, 10cy Borrow
5+25	Install 24" X 30' CPP, 10cy Borrow
6+45	Install 18" X 30' CPP, 10cy Borrow
7+80	Install 18" X 30' CPP, 10cy Borrow
8+45	Install 18" X 30' CPP, 10cy Borrow
8+70	END OVERLAY; BEGIN LINEAR GRADING
9+90	Install 18" X 30' CPP
11+08	Install 18" X 30' CPP
12+56	Install 18" X 30' CPP
13+66	Install 18" X 30' CPP
18+40	Install 18" X 30' CPP
21+15	Install 18" X 30' CPP
22+80	Install 18" X 30' CPP
23+25	Install 24" X 30' CPP
25+10	Install 18" X 30' CPP
28+55	Install 18" X 30' CPP
28+63 = MP 0.54	E.O.P. END LINEAR GRADING

Road 3023530

STA	Description
0+00 = MP 0.00	BOP; Begin 1' overlay, 1023 CY Borrow
1+20	Install 18" X 30' CPP, 10 CY Borrow
12+95	Install 19' Log Culvert, 10 CY Borrow, Fish Timing June 25 - Sept 1
17+95 = MP 0.34	EOP

Road 3030100

MP	Description
1.24	POB; intersection w/3030110
	Begin Mechanical Brushing
1.84	End Mechanical Brushing

STA	Description
0+00 = MP 1.84	3030100 @ MP 1.84
	Begin Roadway Reconditioning
31+00	Repair Road, 10 CY Borrow
40+50	Clean CMP Inlet
51+38	Clean CMP Inlet
59+93	Install 18" X 30' CPP, 10 CY Borrow
	Ditch 50' Ahead
69+60	Remove Waterbar, 10 CY Borrow
71+34	Install Drainage Dip
74+03	Remove Existing Log Culvert
	Install 10' Log Culvert, 15 CY Borrow
75+78	Ditch 30' Back
	Begin 1' lift rock, 25 CY Borrow
76+18	End lift of rock
76+25	Remove 4' Log Culvert
	Install 36" X 36' CPP, 20 CY Borrow
84+70 = MP 3.44	EOP

BRIDGE REHABILITATION WORK LISTS

Item 1.1 Thorne Bay Sort Yard - Bridge Rehabilitation

Bridge is a 34' long glued laminated slab bridge currently stored in the Thorne Bay Sort Yard
Work includes furnishing and replacing one (C10"X20"X16') stiffener. See Item 1.1 Detail and Notes, sheet 23

Item 1.2 Thorne Bay Sort Yard - Bridge Rehabilitation

Bridge is a new 40' glued laminated timber slab bridge currently stored in the Thorne Bay Sort Yard
Work includes furnishing and delivering 1 - 8"x12"x36" curb block to bridge storage site. See Item 1.2 Detail and Notes, sheet 23

Item 1.5 Thorne Bay Sort Yard - Bridge Rehabilitation

Bridge is an 80' Hamilton brand modular steel bridge currently stored in the Thorne Bay Sort Yard. Work includes:
Furnish and install (8) 7/8" dia. X 2 1/2" H.S. bolts with cut washers to complete the connections of 4 cross bracings
Replace (3) 8" X 10" X 8' 11" timber cross-ties, as shown in typical Hamilton detail drawings
All structural lumber shall be No. 1 grade structural grade Douglas Fir or Western Larch conforming to AASHTO M168 and shall be treated with copper naphthenate in accordance with AWPA U1 Use Category 4A.

Item 1.6 Road No. 3015600, Milepost 3.19 Bridge Rehabilitation

Bridge is a 32' Native Log Stringer bridge currently installed at this site. Work includes:
Furnish and install two brow logs, 15" dia. or greater, as shown in short-term log stringer bridge typical drawing
Place 15 CY of riprap to protect the right upstream bank adjacent to bridge site, as staked in the field by the engineer

Item 1.7 Road No. 3023500, Milepost 3.06 Bridge Rehabilitation

Bridge is a 50' Native Log Stringer bridge currently installed at this site. Work includes:
Place 40 CY of rip rap on the abutments, as staked in the field by the engineer.

Item 1.8 Road No. 3017000, Milepost 3.399 Bridge Rehabilitation

Bridge is an 80' Rainier brand modular steel bridge currently installed at this site. Work includes:
Furnish and install one swing diaphragm (with (6) bolts) at center span, as shown in the Rainier typical drawing

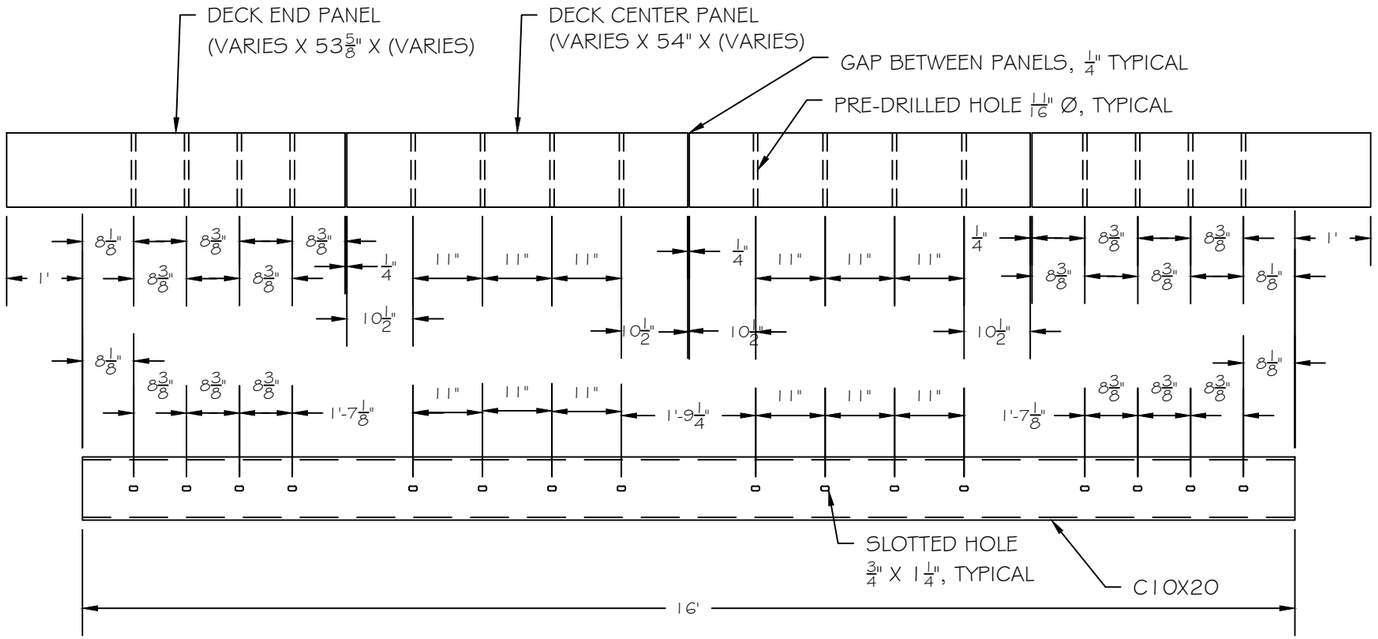

ITEM 1.1 DETAIL: STIFFENER BEAM - PLAN VIEW

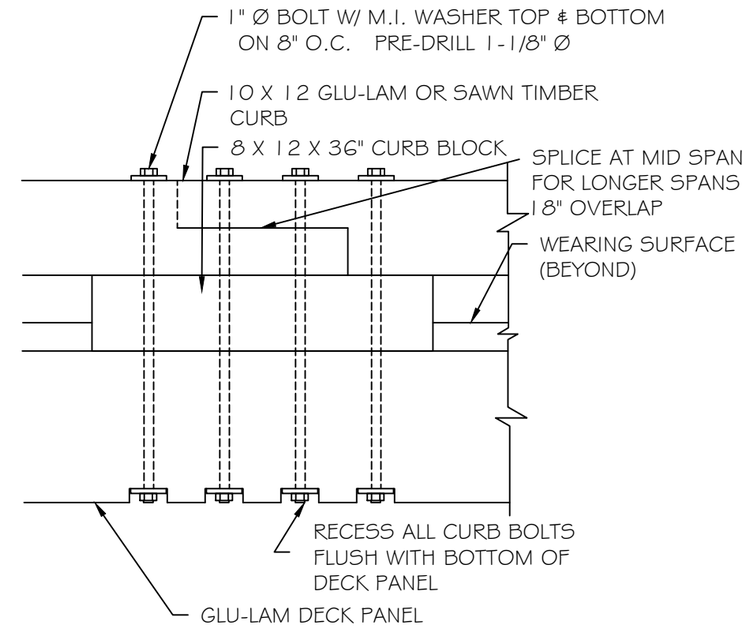

ITEM 1.2 DETAIL: CURB CONNECTION SECTION

ITEM 1.1 NOTES:
1. REMOVE EXISTING BENT STIFFENER FROM BRIDGE. FURNISH AND REPLACE (1) C10X20 STIFFENER WITH SLOTTED SLOTTED HOLES AS SHOWN ABOVE.
2. STIFFENER IS TO BE INSTALLED ON THE 34' LONG GLU-LAM BRIDGE CURRENTLY IN STORAGE AT THE THORNE BAY SORT YARD.
3. STEEL SHALL BE ASTM A36 GRADE
4. HOT DIP GALVANIZE ALL STEEL AFTER FABRICATION

ITEM 1.2 NOTES:
1. FURNISH AND DELIVER (1) 8 X 12 X 36" CURB BLOCK TO BRIDGE STORAGE LOCATION AT THORNE BAY SORT YARD.
2. PRE-DRILL (4) 1 1/8" Ø BOLT HOLES AT 8" O.C.
3. TIMBER IS TO BE COASTAL DOUGLAS FIR #1 OR BETTER
4. TIMBER IS TREATED IN ACCORDANCE W. AWPA C28 OR BETTER AFTER FABRICATION W/ PENTACHLOROPHENOL OR COPPER NAPTHANATE.

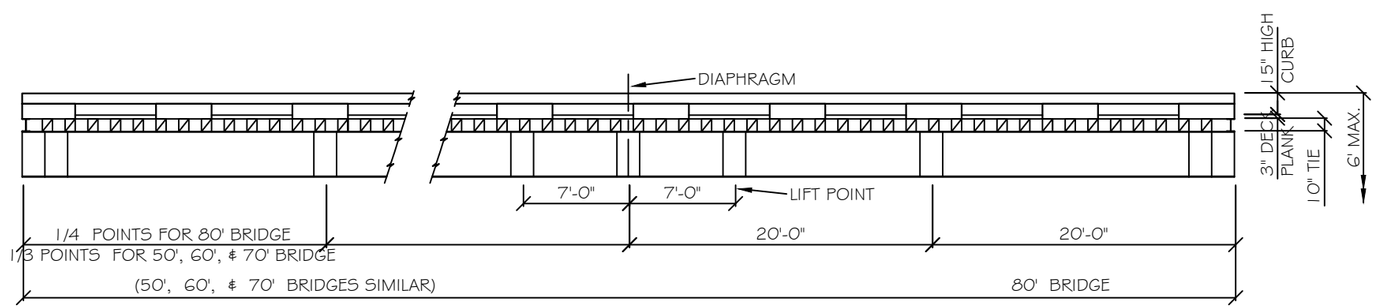

BRIDGE ELEVATION

ITEM 1.8 DETAIL: RAINIER BRIDGE

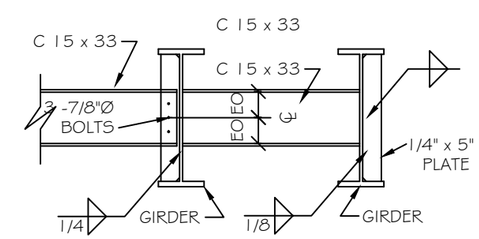

DIAPHRAGM

ITEM 1.8 DETAIL: RAINIER BRIDGE

TONGASS ENGINEERING & RECREATION	DESIGNED:	DATE: XX/XX/XX	DATE:	REVISION:	BY:	BIG THORNE STEWARDSHIP SPECIFIED ROADS	BRIDGE MAINTENANCE
	DRAWN: G. REED	DATE: 6/2013	XX/XX/XX	XXXXXXXXXX	X. XXXXXX	USDA FOREST SERVICE - TONGASS NATIONAL FOREST	6_Quantities_Worklists.DWG
	REVIEWED: X. XXXXXXXXXX	DATE: XX/XX/XX	XX/XX/XX	XXXXXXXXXXXX	X.XXXXXX	R-10 - THORNE BAY RANGER DISTRICT	PLOT ON 11"X17" PAPER
	TNFTYP:09/04		XX/XX/XX	XXXXXXXXXXXX	X. XXXXXX		SH. 23 of 35

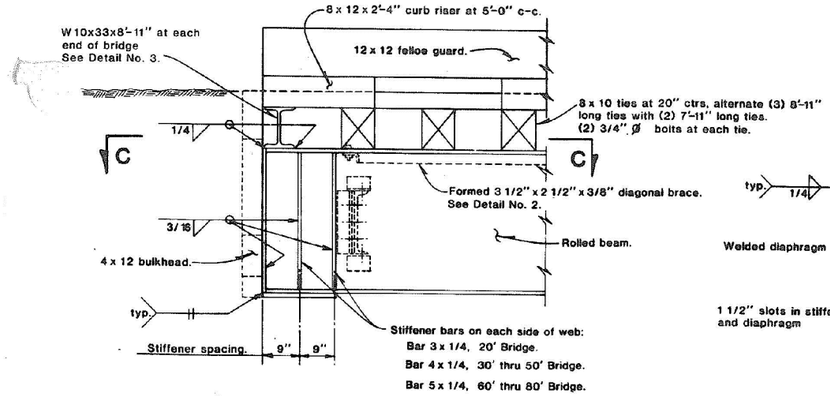

VIEW B-B

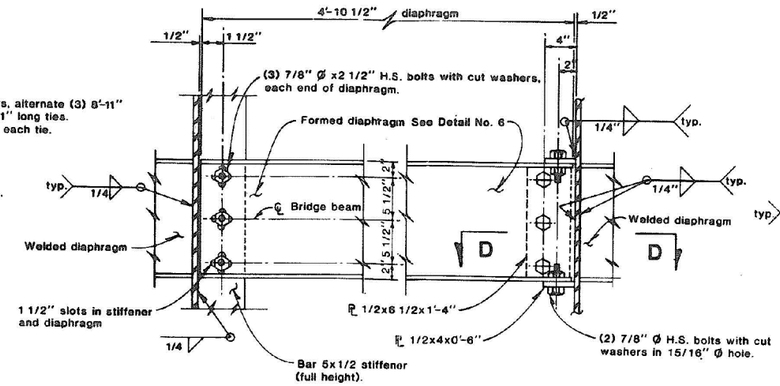

DETAIL NO. 1

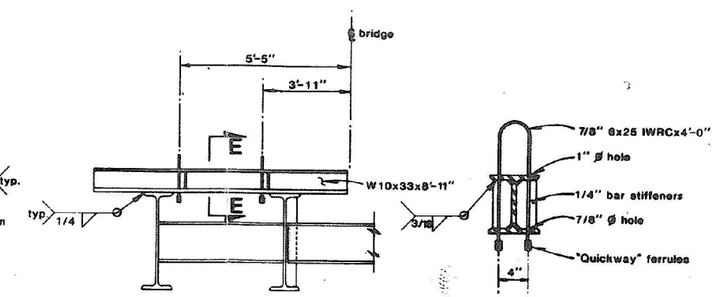

DETAIL NO. 3

SECTION E-E

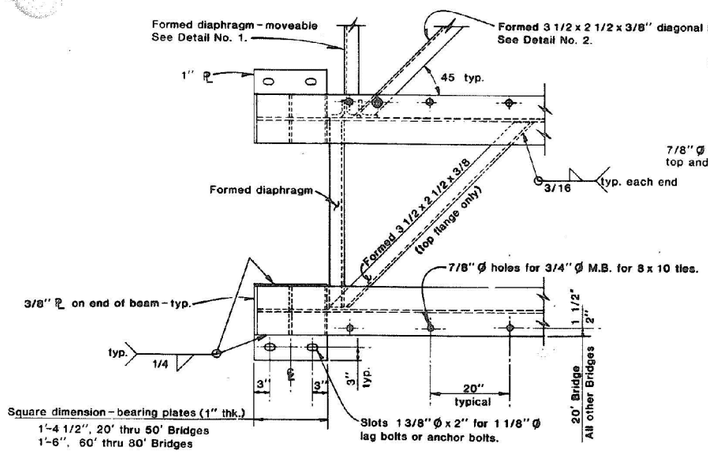

SECTION C-C

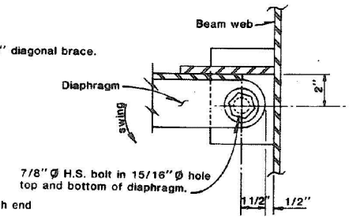

SECTION D-D

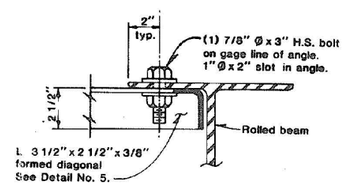

DETAIL NO. 2

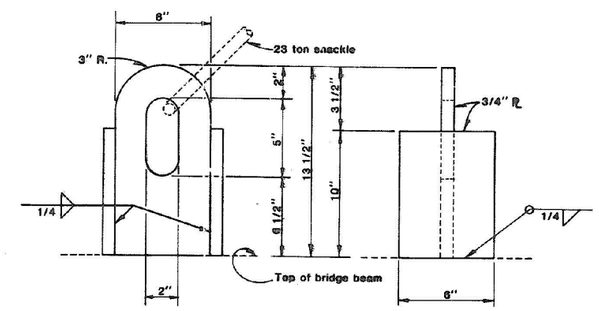

DETAIL NO. 4

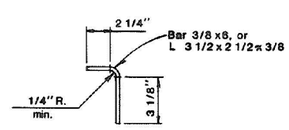

DETAIL NO. 5

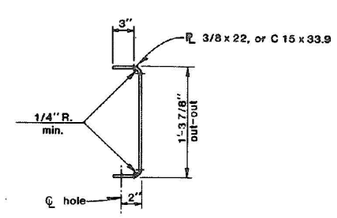

DETAIL NO. 6

U.S. Patent No. 4073025
Canada Patent No. 1077205

REV.	DESCRIPTION	BY	DATE
	Redrawn and updated		8/80

OBEC Consulting Engineers
244 COUNTRY CLUB ROAD
EUGENE, OREGON 97401 503-683 6090

"E-Z" BRIDGES
HAMILTON CONSTRUCTION COMPANY
Springfield, Oregon

DETAILS

DESIGNED: AKK/RDC | PROJ. NO. 5-253 | SHT. 2 OF 2
DRAWN: LJR | CHK'D: RDC | FILE NO. 3708

APPROVED BY | TITLE

DWG. NO. SD-2-2

TONGASS ENGINEERING & RECREATION	DESIGNED: X. XXXXXXX	DATE: XX/XX/XX	DATE:	REVISION:	BY:	BIG THORNE STEWARDSHIP SPECIFIED ROADS	TYPICAL DETAILS, HAMILTON BRAND BRIDGE
	DRAWN: X. XXXXXXX	DATE: XX/XX/XX	XX/XX/XX	XXXXXXXXXX	X. XXXXXX	USDA FOREST SERVICE - TONGASS NATIONAL FOREST	6_Quantities_Worklists.DWG
	REVIEWED: X. XXXXXXXXXX	DATE: XX/XX/XX	XX/XX/XX	XXXXXXXXXXXX	X.XXXXXX	R-10 - THORNE BAY RANGER DISTRICT	PLOT ON 11"X17" PAPER
	TNFTYP: 09/04		XX/XX/XX	XXXXXXXXXXXX	X. XXXXXX		SH. 24 of 35

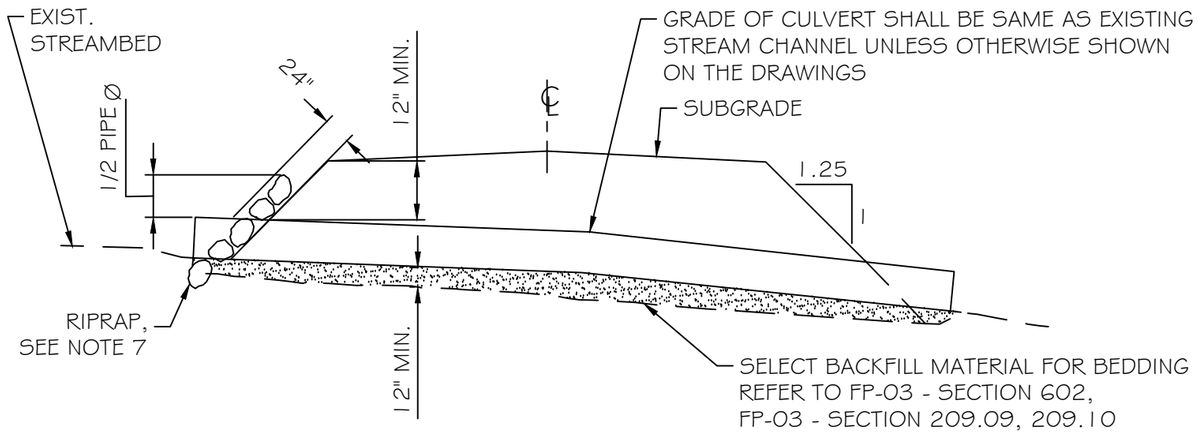

TYPICAL CULVERT INSTALLATION AT LIVE STREAMS

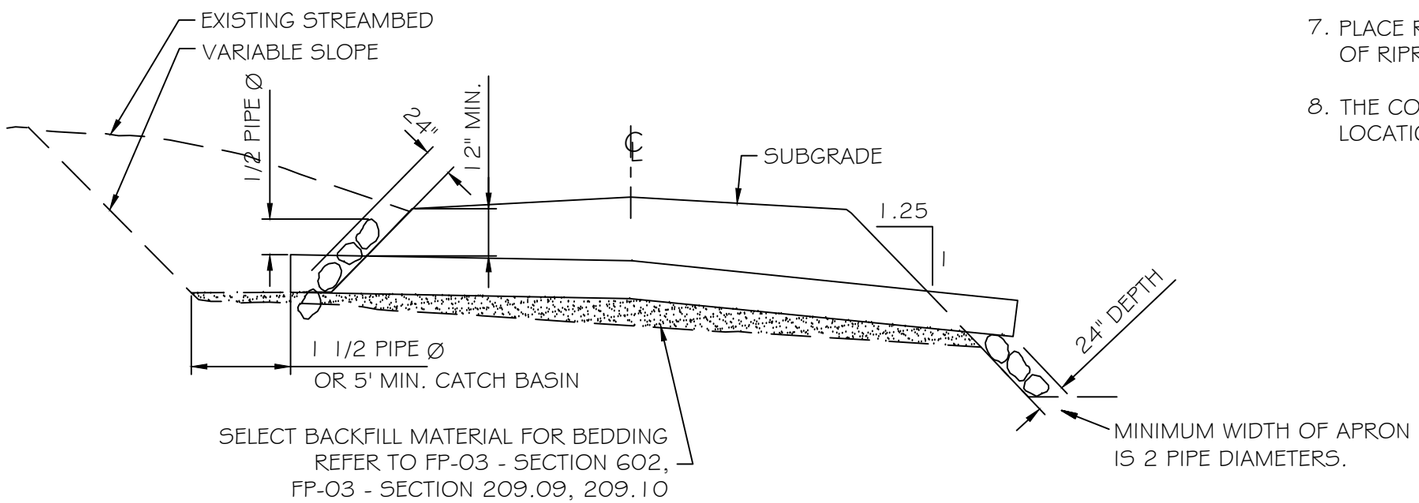

TYPICAL CULVERT INSTALLATION FOR DITCH RELIEF

POLYETHYLENE (PE) CULVERT			
PER ASTM D 3350			
CORRUGATED			
PIPE SIZE Ø	MIN. COVER	CELL CLASS. NO. 315412C	CELL CLASS. NO. 324420C
		MAXIMUM FILL HEIGHT IN FEET	
18"	12"	12'	10'
24"	12"	12'	10'
30"	12"	12'	10'
36"	12"	11'	10'

POLYETHYLENE (PE) CULVERT			
RIBBED			
PIPE SIZE Ø	MIN. COVER	CELL CLASS. NO. 334433C	CELL CLASS. NO. 335434C
		MAXIMUM FILL HEIGHT IN FEET	
18"	12"	18'	24'
24"	12"	22'	28'
30"	12"	22'	28'
36"	12"	25'	31'
40"	12"	21'	27'
48"	12"	21'	26'

NOTES

1. PLACE CULVERT IN ALIGNMENT WITH THE NATURAL STREAM CHANNEL. WHERE NO CHANNEL IS APPARENT INSTALL CULVERTS AT SKEWS SHOWN ON THE DRAWINGS OR AS DIRECTED BY THE C.O.
2. MINIMUM CULVERT GRADES SHALL BE 5% OR 1/2 OF THE TRIBUTARY DITCH GRADE.
3. CAMBER WILL DEPEND ON SITE CONDITIONS. MAXIMUM CAMBER IS 2% (STEEL OR ALUMINUM CULVERTS) OR 1% (POLYETHYLENE CULVERTS) OF CULVERT LENGTH BY NO MORE THAN 2.5-IN AT CENTER.
4. CATCH BASIN CONSTRUCTION IS REQUIRED WHEN SHOWN ON THE DRAWINGS AND AT ALL INSTALLATIONS WHERE THE INLET IS LOWER THAN NATURAL GROUND.
5. CULVERT INLETS AND OUTLETS SHALL EXTEND 24-IN BEYOND THE TOE OF THE FILL UNLESS AGREED TO BY THE C.O.
6. MINIMUM COVER OVER CULVERTS UNLESS OTHERWISE SHOWN ON THE DRAWINGS IS 12-IN.
7. PLACE RIPRAP AT SITES SHOWN ON THE DRAWINGS OR AS DIRECTED BY THE C.O. MINIMUM WIDTH OF RIPRAP IS 1.5 PIPE DIAMETERS. CLASS 4 (MIN) SIZE.
8. THE CONTRACTOR SHALL PROVIDE THE C.O. A LIST OF AS- SLOPE STAKED CULVERT LENGTHS AND LOCATIONS.

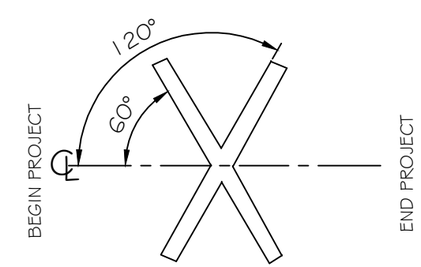

CULVERT SKEW DIAGRAM

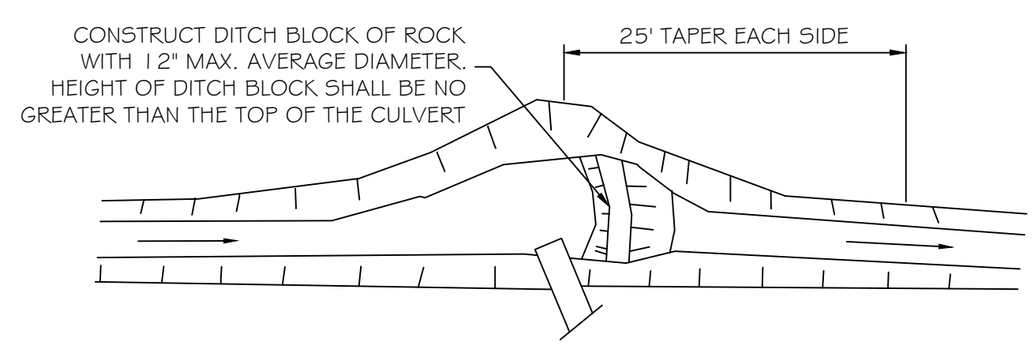

TYPICAL CATCH BASIN WITH DITCH BLOCK

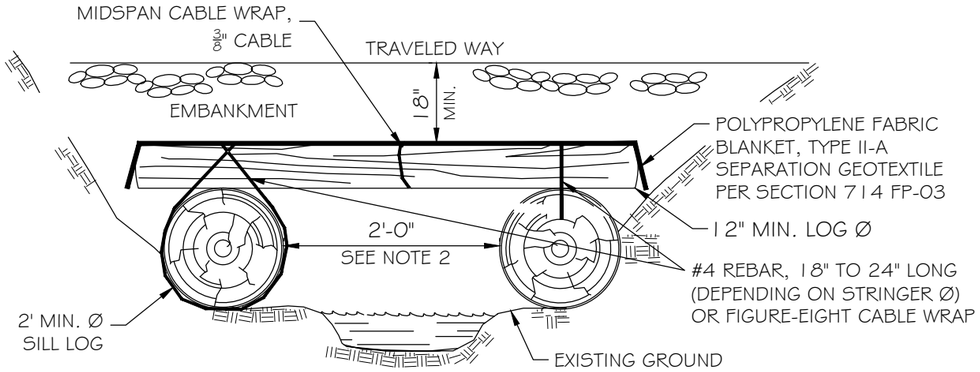

TYPICAL LOG CULVERT SECTION

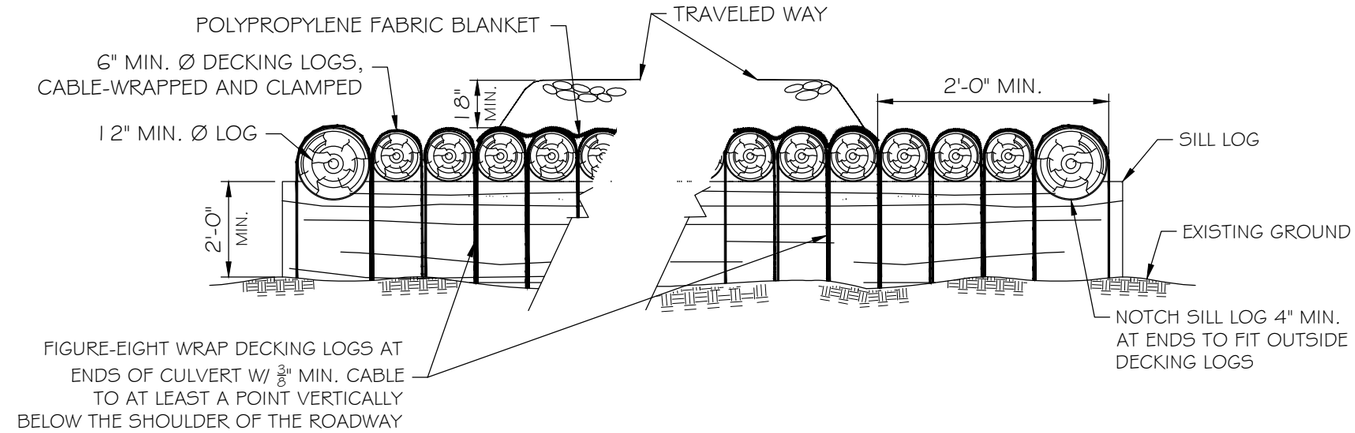

SIDE VIEW - ALT. CABLE-LASHED LOG CULVERT

MAXIMUM FILL DEPTHS FOR ROADWAY MATERIAL OVER LOG CULVERT (IN)															
MINIMUM STRINGER Ø (IN.)	SPAN LENGTH (FT)														
	5	6	7	8	9	10	11	12	13	14	15	16	17	18	19
14	240	150	77	38	18	0	0	0	0	0	0	0	0	0	0
16	240	240	240	199	146	116	70	36	0	0	0	0	0	0	0
18	240	240	240	240	240	224	160	114	80	54	32	0	0	0	0
20	240	240	240	240	240	240	240	196	152	116	88	68	50	36	24
22	240	240	240	240	240	240	240	240	226	182	146	120	96	78	62
24	240	240	240	240	240	240	240	240	240	240	208	172	144	122	102
26	240	240	240	240	240	240	240	240	240	240	240	230	196	168	144
28	240	240	240	240	240	240	240	240	240	240	240	240	240	214	186
30	240	240	240	240	240	240	240	240	240	240	240	240	240	240	240
32	240	240	240	240	240	240	240	240	240	240	240	240	240	227	197

GENERAL NOTES

1. CULVERT LENGTHS, AS SHOWN ON THE PLANS, ARE APPROXIMATE AND ARE SUBJECT TO REVISION BY THE ENGINEER.
2. MINIMUM LOG CULVERT SPAN SHALL BE GREATER THAN OUTSIDE BANKFULL WIDTH. SPAN MEASURED FROM THE INSIDE FACE TO THE INSIDE FACE OF EACH SILL LOG.
3. RIP RAP, WHEN DESIGNATED ON THE PLANS, SHALL EXTEND A MINIMUM OF ONE FOOT BEYOND THE SIDES OF THE CULVERT. CULVERTS SHALL BE CONSTRUCTED IN ACCORDANCE WITH LINES, GRADES, AND DIMENSIONS SHOWN ON DRAWINGS AND/OR AS STAKED ON THE GROUND.
4. WHEN REBAR IS USED TO CONNECT STRINGERS TO SILL LOG, A CABLE WRAP AT MIDSPAN WILL BE USED ALONG THE FULL LENGTH OF THE LOG CULVERT.
5. CABLE WRAPS SHALL BE STAPLED ON EACH STRINGER.
6. DO NOT PLACE EXCESS AND/OR UNSUITABLE MATERIAL EXCAVATED DURING CULVERT CONSTRUCTION ON THE SLOPES ADJACENT TO THE STREAM OR IN THE STREAM CHANNEL.

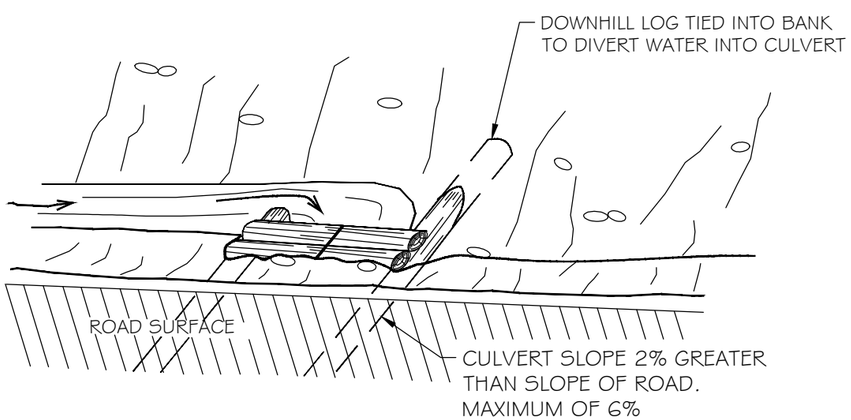

TYPICAL LOG CULVERT INLET

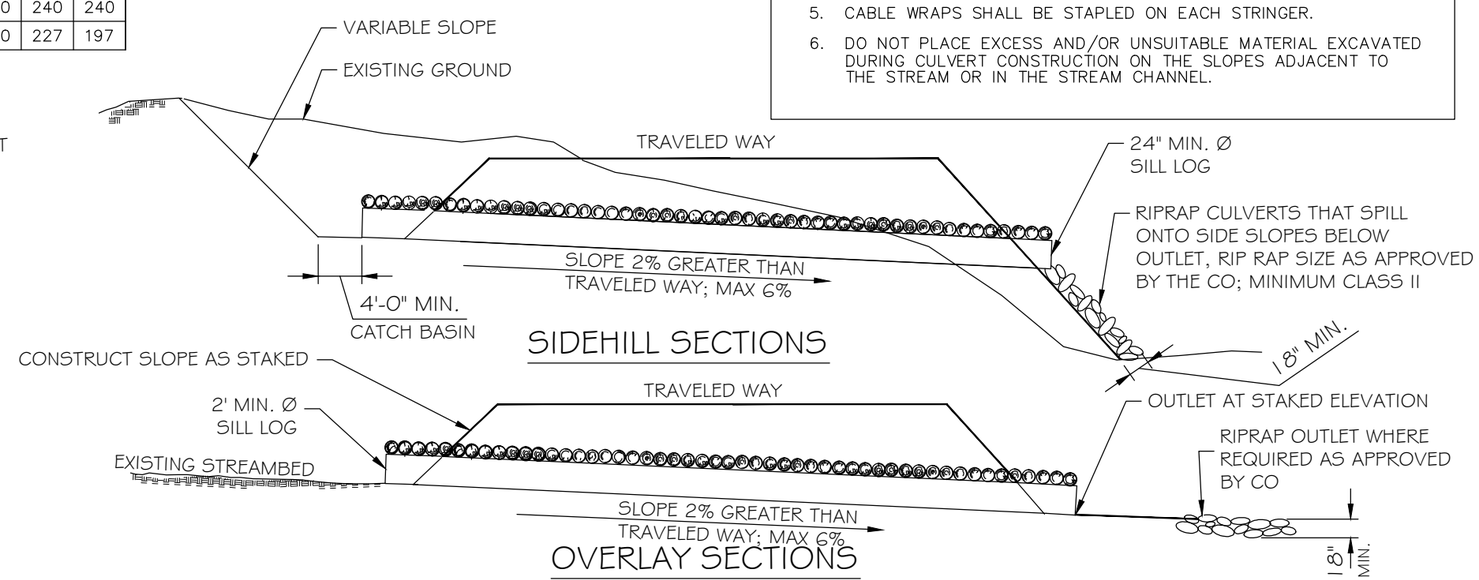

SIDEHILL SECTIONS

OVERLAY SECTIONS

TYPICAL LOG CULVERT INSTALLATION

(THIS DRAWING NOT TO SCALE)

TONGASS ENGINEERING & RECREATION	DESIGNED: T. BRADSHAW	DATE: 1/2013	DATE:	REVISION:	BY:	BIG THORNE STEWARDSHIP SPECIFIED ROADS	LOG CULVERT DETAIL
	DRAWN: T. BRADSHAW	DATE: 1/2013				USDA FOREST SERVICE - TONGASS NATIONAL FOREST R-10 - THORNE BAY RANGER DISTRICT	PLOT ON 11"X17" PAPER
	REVIEWED: Q. SMITH	DATE: 2/2013					SH. 26 of 35
	TNFTYP:03/05						

LASHING REQUIREMENTS

FOR SPANS	LASH AT THESE LOCATIONS
UNDER 20-FT	ABUTMENTS and MIDSPAN
20-FT to 36-FT	ABUTMENTS and THIRD POINTS
OVER 36-FT	ABUTMENTS, CENTER, and QUARTER POINTS

PLACE LOG STRINGERS BUTT TO TIP. PENETRATING FASTENERS or CLAMPS (6" MIN. EMBEDMENT LENGTH) MAY BE USED UNLESS OTHERWISE INDICATED IN WRITING BY THE C.O.

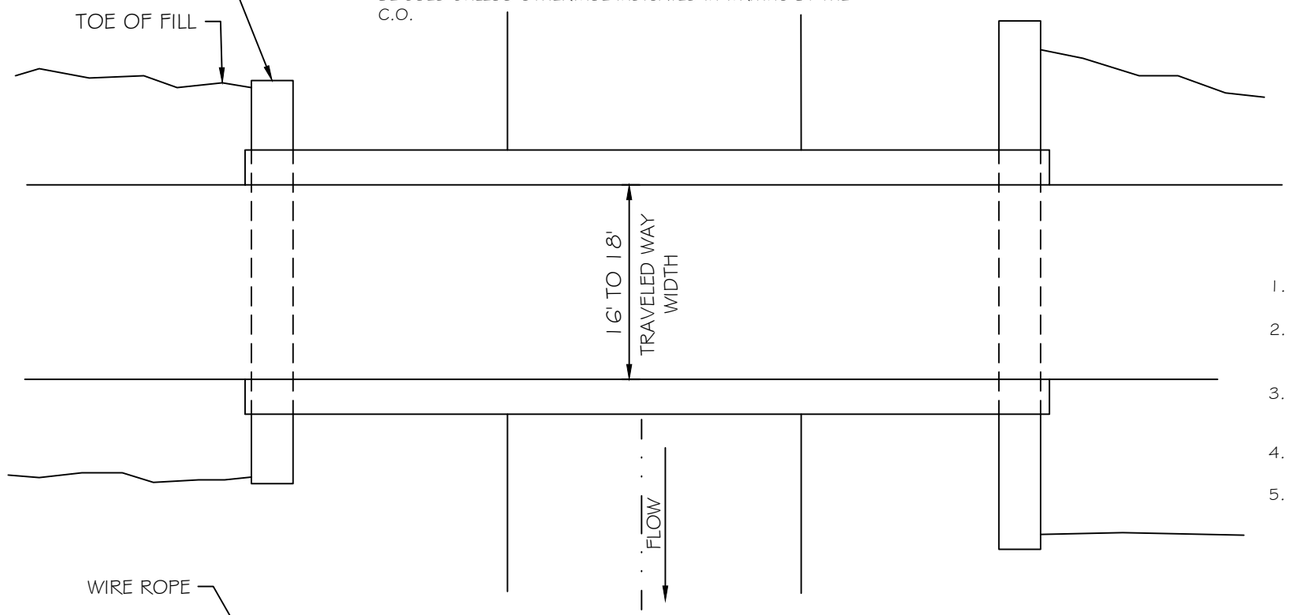

PLAN VIEW

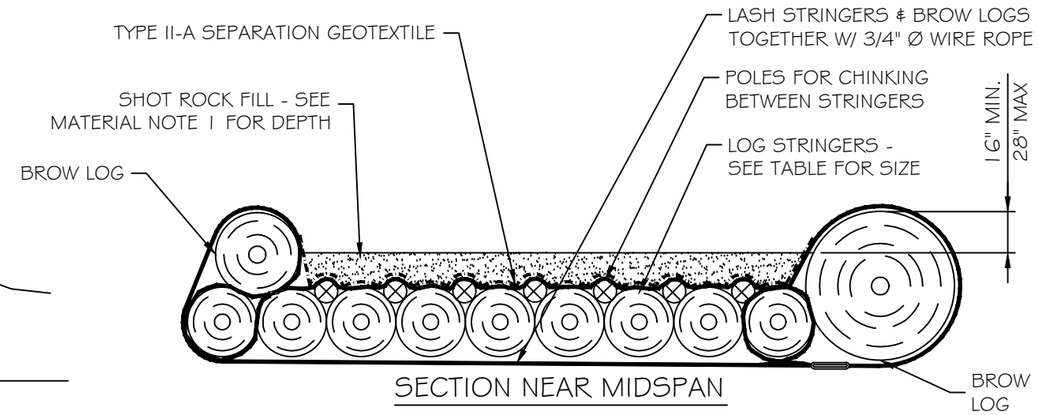

SECTION NEAR MIDSPAN

CONSTRUCTION NOTES:

1. CONSTRUCT BRIDGE TO ELEVATIONS AND ALIGNMENTS SHOWN ON THE DRAWINGS or STAKED ON THE GROUND.
2. UNLESS OTHERWISE REQUIRED, USE A SINGLE MUDSILL AT EACH ABUTMENT. PLACE MUDSILL ON SHOT ROCK OR FIRM NATIVE MATERIAL AS DIRECTED BY THE C.O.
3. PLACEMENT OF RIPRAP or OTHER INSTREAM WORK IS NOT ALLOWED UNLESS APPROVED IN WRITING IN ADVANCE BY THE C.O. INSTREAM WORK or EQUIPMENT CROSSINGS ARE NORMALLY ALLOWED ONLY AS SHOWN ON THE PLAN DRAWINGS.
4. EQUIPMENT CROSSINGS MUST BE APPROVED IN WRITING BY THE C.O.
5. BRIDGE REMOVAL SHALL BE ACCOMPLISHED AS FOLLOWS:
   a) REMOVE SHOT ROCK FROM BRIDGE DECK USING BACKHOE AND HAND TOOLS.
   b) LAY BACK FILLS FACING THE STREAM TO A 1 (vertical) to 1-1/2 (horizontal) (max) SLOPE.
   c) INDIVIDUALLY LIFT EACH STRINGER LOG WITHOUT CAUSING STREAM DISTRUBANCE. PLACE LOGS IN DESIGNATED DECKING AREA. REMOVE DRIVEABLE SIDE(S) MUDSILL LOG(S).
   d) BLOCK CROSSING AT DRIVEABLE END(S) WITH RIP RAP WITH APPROXIMATE CUBIC DIMENSIONS OF 30 TO 36 INCHES AND KEYED INTO THE ROADBED 6 TO 12 INCHES OR OTHER METHOD APPROVED BY THE C.O.
   e) SEED AND FERTILIZE ALL DISTRUBED AREAS.

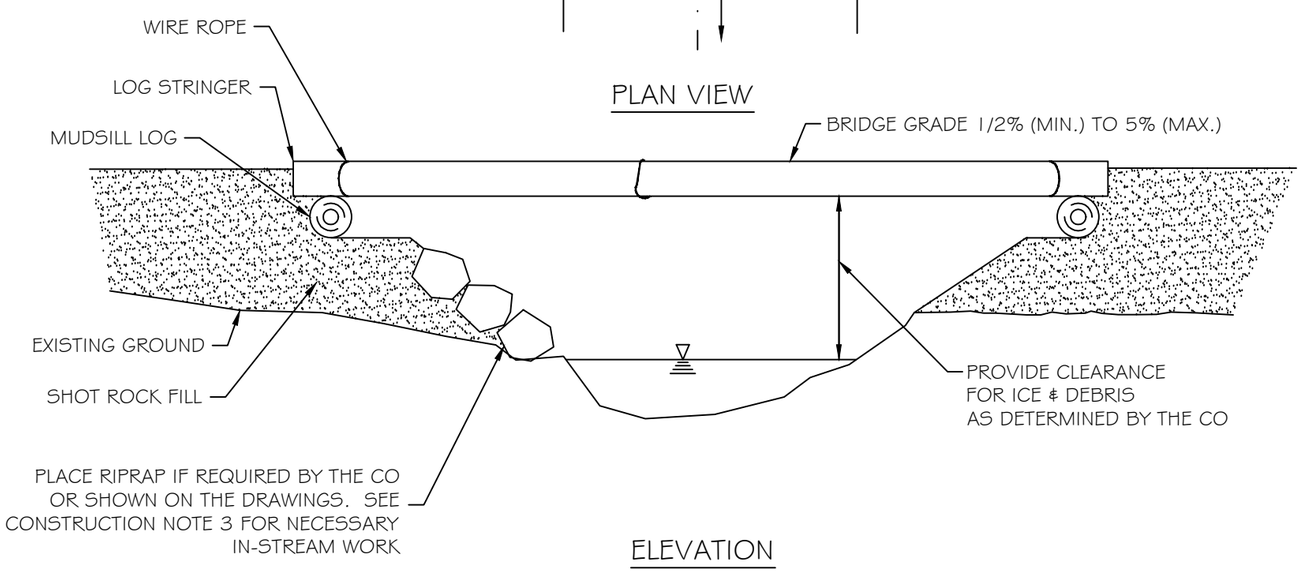

ELEVATION

MATERIAL NOTES:

1. DIAMETERS ARE GIVEN IN INCHES, REPRESENTING AVERAGE MIDSPAN DIAMETERS INSIDE BARK. REQUIRED DIAMETERS WILL VARY WITH DEPTH OF ROCK SURFACING. DEPTHS OF ROCK USED TO CALCULATE THIS TABLE ARE:

   SPANS TO 20 FEET = 12 INCH ROCK
   SPANS 20 FEET TO 36 FEET = 9 INCH ROCK
   SPANS OVER 36 FEET = 6 INCH ROCK

2. LOGS TO BE STRAIGHT, SOUND, AND FREE OF DECAY, EXCESSIVE TWIST (SPIRAL GRAIN MORE THAN 1 in 8) AND ALL DEFECTS THAT MAY CONSIDERABLY AFFECT STRENGTH.
3. KNOT SIZE IN THE MIDDLE HALF OF THE LENGTH NOT TO EXCEED 5". DO NOT USE STRINGERS w/ LARGE KNOTS OPPOSITE EACH OTHER.
4. ROCK IN SHOT ROCK SURFACING TO BE SMALLER THAN 1/2 THE SURFACING DEPTH.

APPROX. STRINGER DIAMETER (INCHES)

SITKA SPRUCE

FOR HEMLOCK USE 1 INCH SMALLER DIAMETER

SPAN LENGTH (FEET)	VEHICLE TYPE			
	HS20	U54	U80	U102
10'	18"	18"	18"	18"
15'	18"	18"	19"	21"
20'	18"	19"	21"	23"
25'	19"	20"	22"	25"
30'	21"	22"	25"	27"
35'	23"	24"	27"	29"
40'	24"	26"	29"	31"
45'	27"	28"	32"	33"
50'	28"	30"	34"	34"
55'	30"	32"	36"	36"
60'	32"	34"	38"	38"

GENERAL NOTES:

TREES TO BE CUT FOR SILL AND BACKWALL LOGS WILL BE DESIGNATED IN THE FIELD BY THE C.O. ATTACH BRIDGE TO SILL AS RECOMMENDED BY THE MANUFACTURER.

ABUTMENT LOCATION AND ELEVATIONS WILL BE STAKED IN THE FIELD BY THE C.O.

CONTRACTOR SHALL GIVE 48 HOURS NOTICE TO C.O. FOR REVIEW AND APPROVAL OF CONTRACTOR STAKING.

MECHANICALLY PLACED EMBANKMENT, WHEN REQUIRED, IS CONSIDERED INCIDENTAL TO BRIDGE INSTALLATION. PLACE IN ACCORDANCE w/ SPECIAL ROCK EMBANKMENT & ROCK BUTTRESS (FP-03 SECTION-252).

PROVIDE CONNECTION BETWEEN BRIDGE HALVES IN ACCORDANCE WITH MANUFACTURER'S DESIGN, INCLUDING DIAPHRAGMS AND ANGLE BRACES BETWEEN GIRDERS AND RUNNING PLANKS ALONG CENTER OF DECK.

FOR BRIDGE FURNISHED BY THE GOVERNMENT, THE CONTRACTOR IS RESPONSIBLE FOR REMOVAL AND TRANSPORTATION OF THE BRIDGE FROM ITS PRESENT LOCATION.

SEE PLAN & PROFILE SHEETS FOR FISH TIMING REQUIREMENTS.

EROSION CONTROL PLAN IS REQUIRED IF DIRECTED BY THE C.O. (FP-03 SECTION-157).

EACH SUBSTRUCTURE PAY 572 PAY ITEM SHALL INCLUDE ENOUGH SILLS AND BACKWALLS FOR 1 BRIDGE, MINIMUM SILL LOG 24"

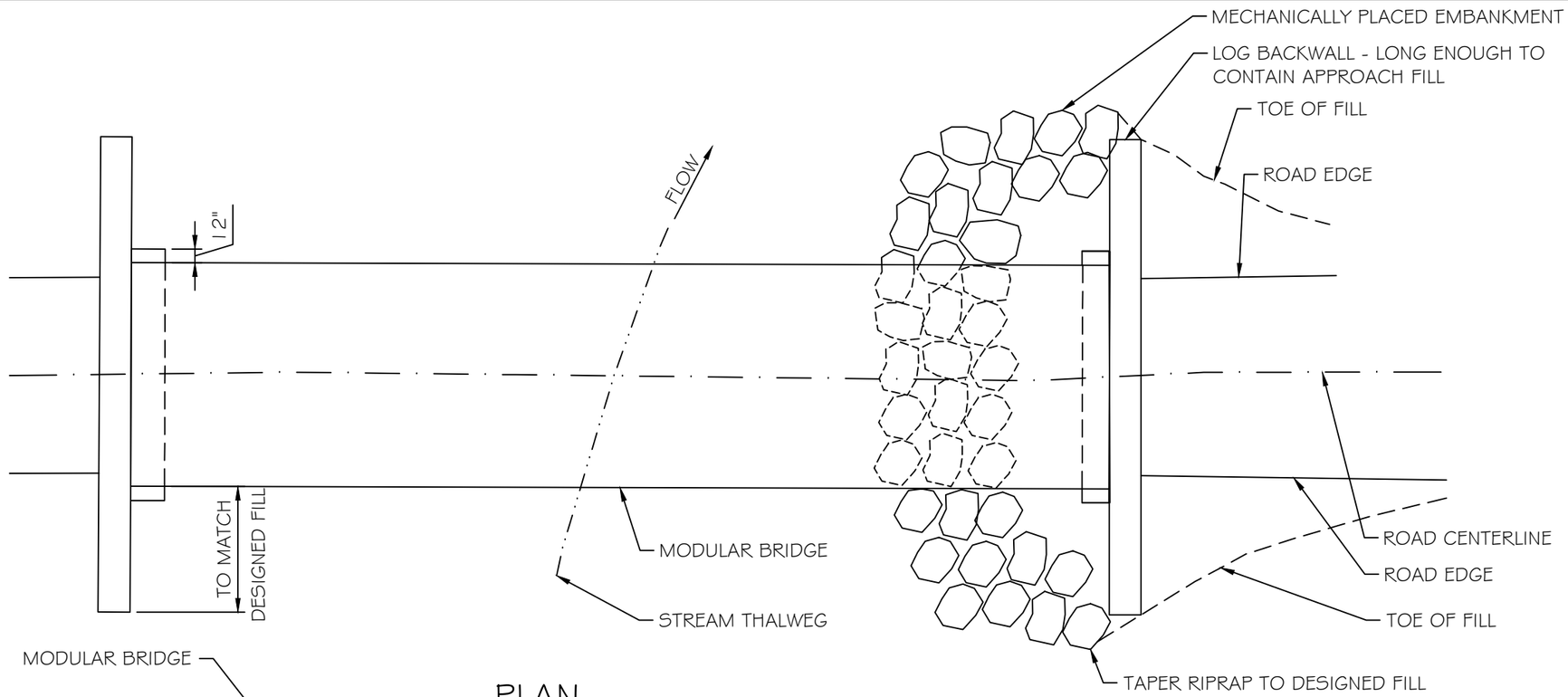

PLAN

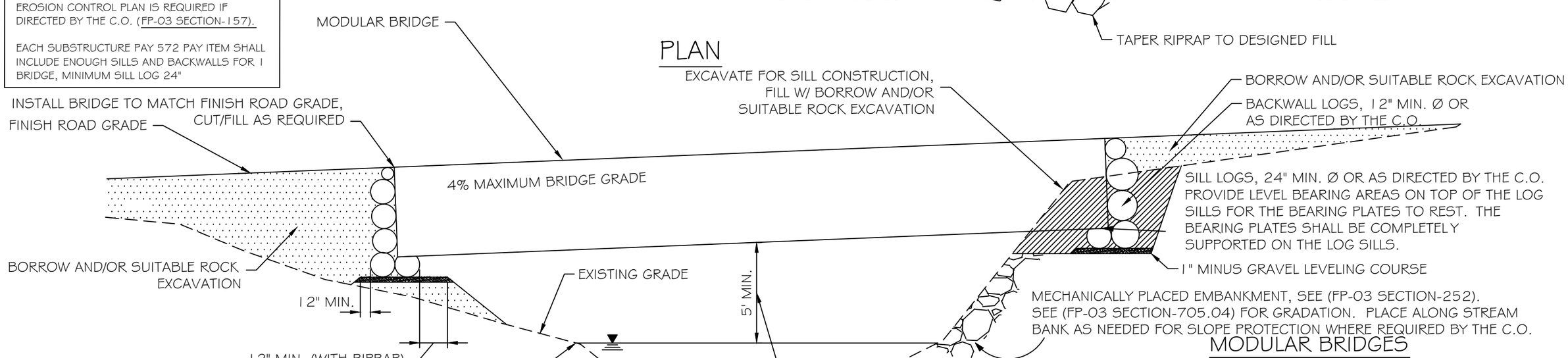

PROFILE

MODULAR BRIDGES

ROAD	L-STA/ MP	LENGTH (FT)	FURNISHED BY		PRESENT LOCATION (IF GOV'T FURNISHED)	PLAN & PROFILE SHEET
			CONTR.	GOV'T		
2030110	1+60	60		X	THORNE BAY SORT YARD	
3012200	2+00	80		X	THORNE BAY SORT YARD	
3023500	46+22	60		X	ROAD 2030110 1+60 AVAILABLE AFTER USE ON 2030110 COMPLETE	

TONGASS ENGINEERING & RECREATION	DESIGNED: X. XXXXXXX	DATE: XX/XX/XX	DATE:	REVISION:	BY:	BIG THORNE STEWARDSHIP ROADS	TYPICAL MODULAR BRIDGE (3 YEARS OR LESS)
	DRAWN: X. XXXXXXX	DATE: XX/XX/XX	XX/XX/XX	XXXXXXXXXX	X. XXXXXX	USDA FOREST SERVICE - TONGASS NATIONAL FOREST R-10 - THORNE BAY RANGER DISTRICT	10_modtyp.dwg PLOT ON 11"X17" PAPER
	REVIEWED: X. XXXXXXXXXX	DATE: XX/XX/XX	XX/XX/XX	XXXXXXXXXXXX	X.XXXXXX		SH. 28 of 35
	TNFTYP:09/04		XX/XX/XX	XXXXXXXXXXXX	X. XXXXXX		

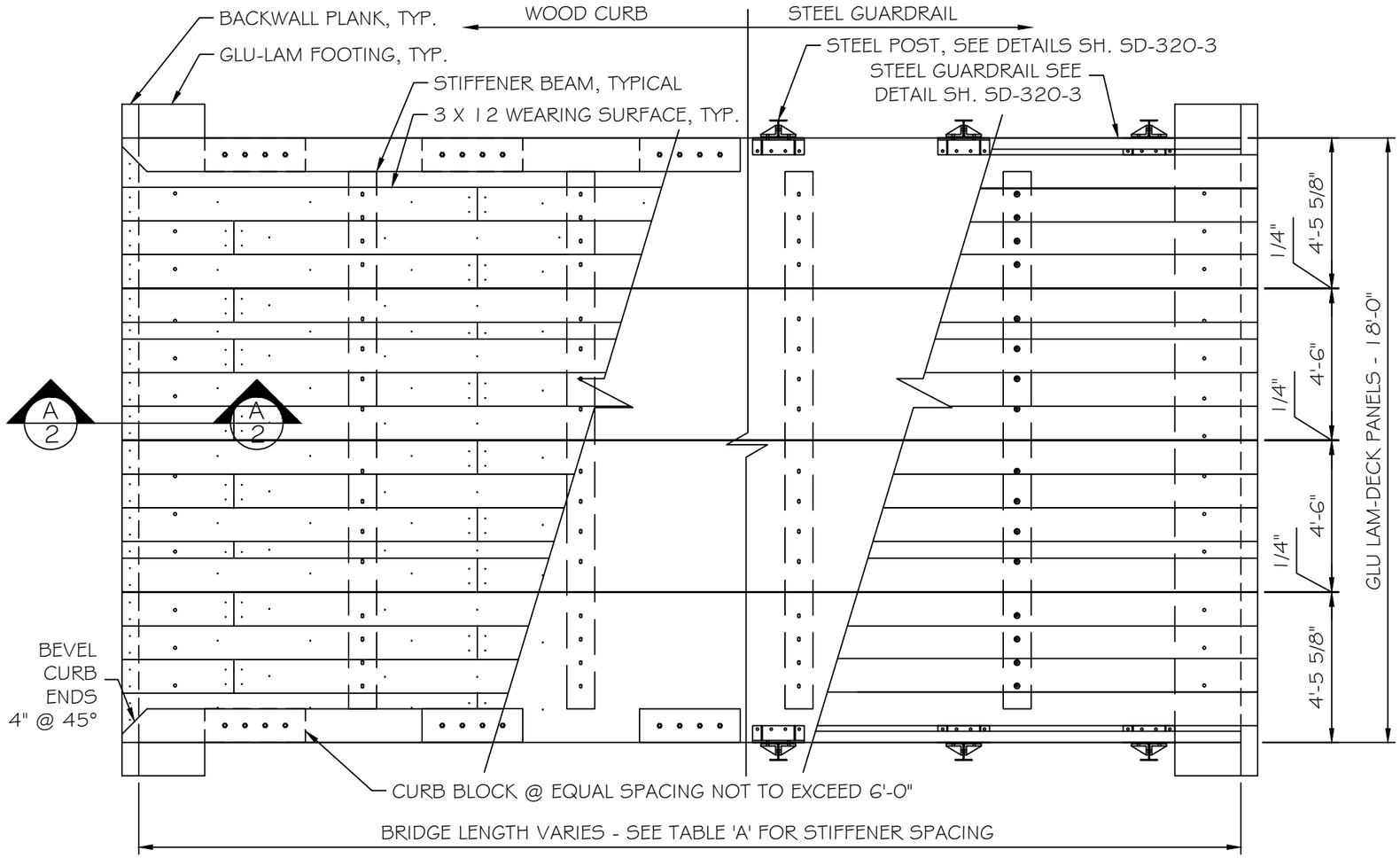

PLAN VIEW

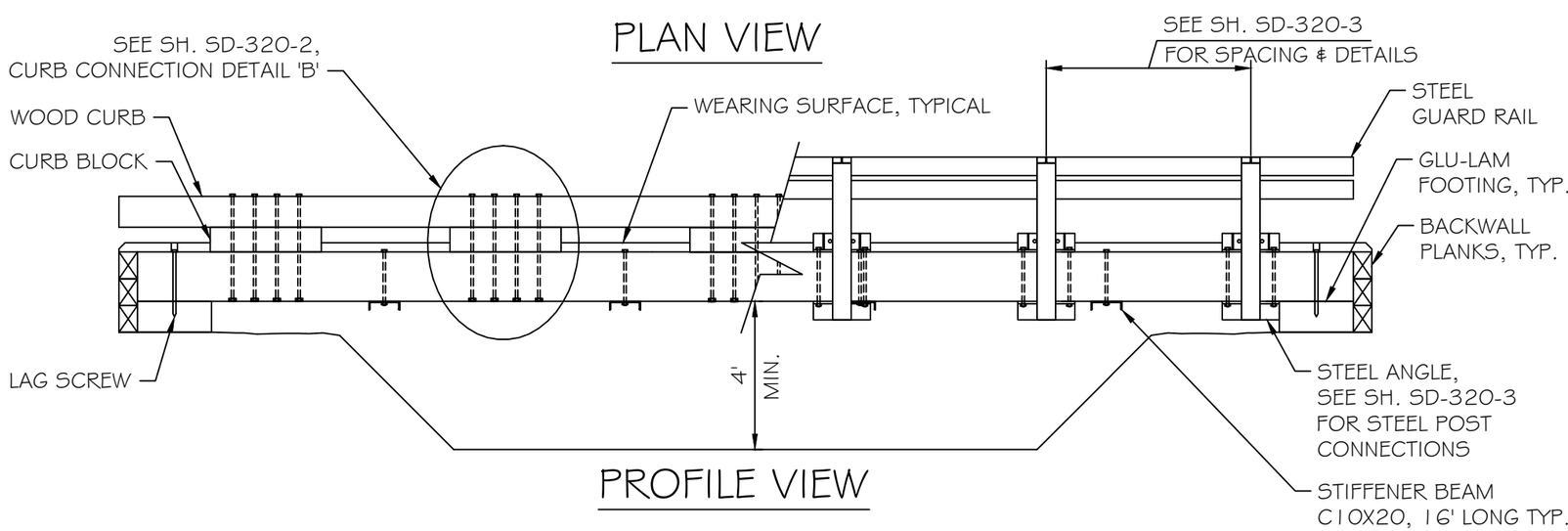

PROFILE VIEW

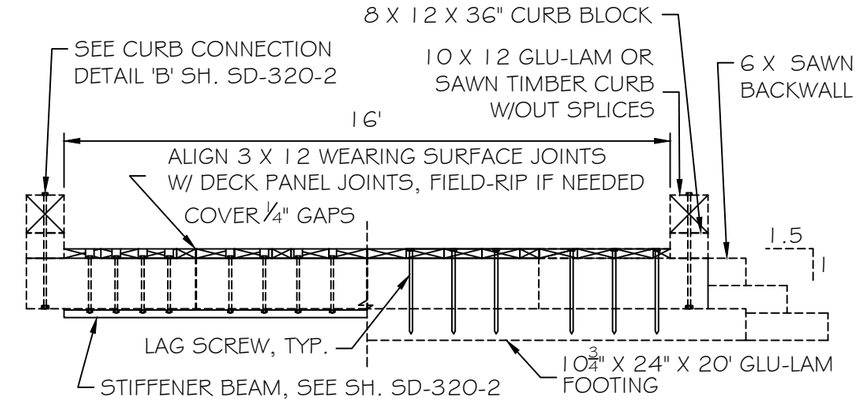

SECTION @ MIDSPAN SECTION @ ABUTMENT

TYPICAL SECTIONS - WOOD CURB

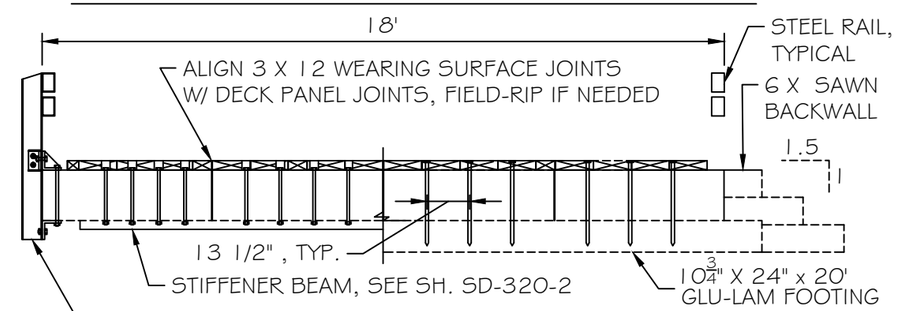

SECTION @ MIDSPAN SECTION @ ABUTMENT

TYPICAL SECTIONS - STEEL GUARD RAIL

NOTES:

1. DECK PANELS DESIGNED IN ACCORDANCE W/ THE 1994 ASHTO LRFD SPECIFICATIONS,FIRST EDITION.
2. PANELS ARE GLU-LAMINATED COASTAL DOUGLAS FIR, COMB. 5 OR BETTER,
   Fby = 6100 psi
   Fvy = 245 psi
3. CURBS ARE COMB. 20FV3 OR NO. 1 COASTAL DOUGLAS FIR.
4. FOOTINGS ARE COMBINATION SYMBOL 1
5. BACKWALL PLANKS SHALL BE NO. 2 HEM FIR OR BETTER.
6. TIMBER IS TREATED IN ACCORDANCE W. AWPA C28 OR BETTER AFTER FABRICATION W/ PENTACHLOROPHENOL OR COPPER NAPTHANATE.
7. WEARING SURFACE SHALL BE UNTREATED NO. 2 HEM FIR, ALASKA HEMLOCK, ALASKA SPRUCE OR ALASKA YELLOW CEDAR.
8. ALL HARDWARE SHALL BE HOT-DIP GALVANIZED.
9. SHOP DRAWINGS SHALL BE SUBMITTED IN ACCORDANCE WITH SPECIFICATION SECTION 574.

TABLE 'A'

BRIDGE LENGTH	PANEL THICKNESS	STIFFENER BEAMS QUANTITY	STIFFENER BEAMS SPACING
40 FT	16 1/4"	4	7'-10"
30 FT	14 1/4"	4	6'-6"
25 FT	12 1/4"	3	6'-6"
20 FT	12 1/4"	2	6'-6"

TONGASS ENGINEERING & RECREATION	DESIGNED:	DATE:	DATE:	REVISION:	BY:
	DRAWN: SJC	DATE: 2/2005	11/2005	edit text	dwv
	REVIEWED: D.VOGAN	DATE: 11/2005			
	TNFTYP:09/04				

BIG THORNE STEWARDSHIP ROADS

USDA FOREST SERVICE - TONGASS NATIONAL FOREST
R-10 - THORNE BAY RANGER DISTRICT

SD-320-1 PLAN/PROFILE/SECTIONS

11_glulam_bridge1_revised.dwg
PLOT ON 11"X17" PAPER

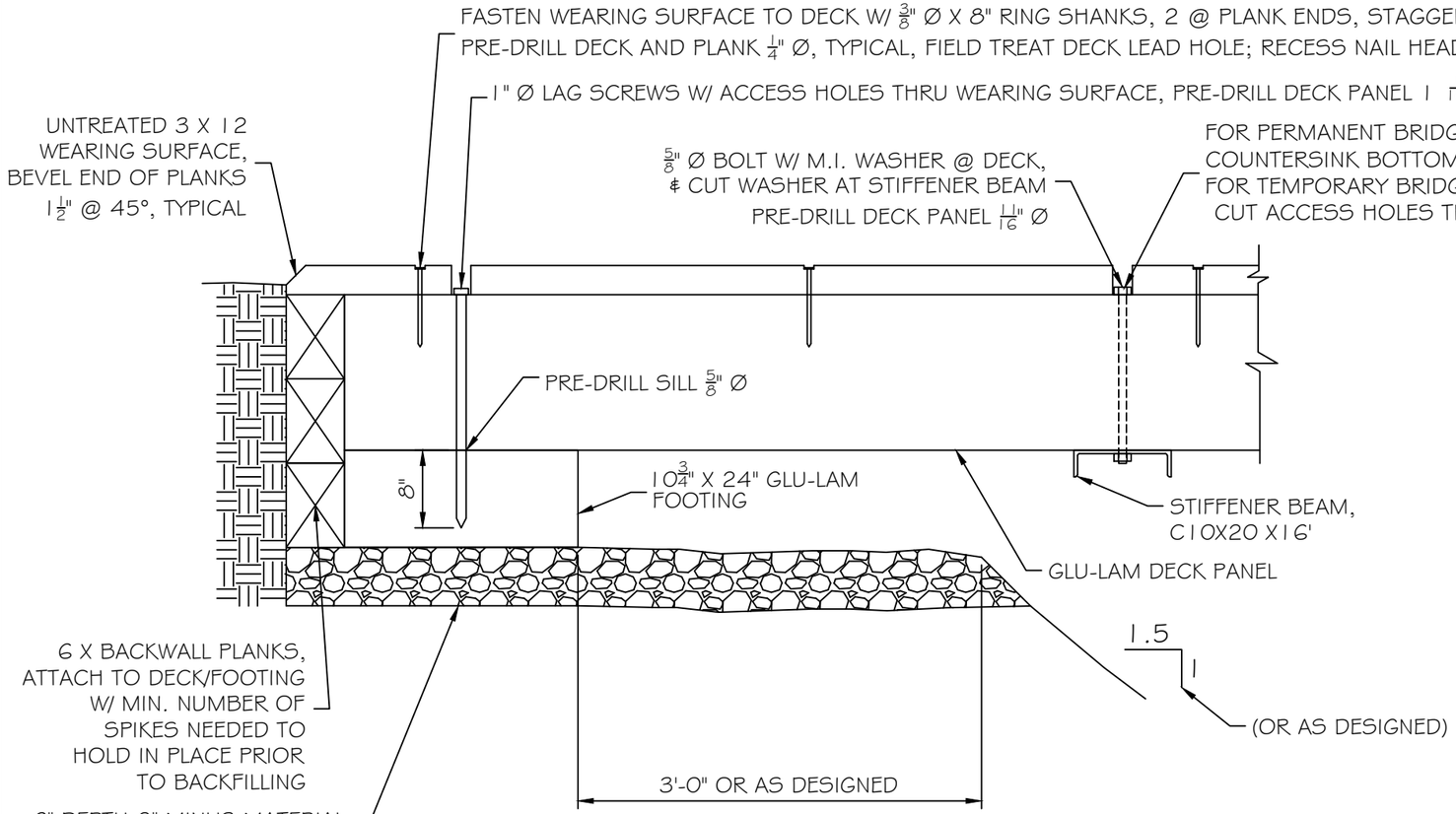

A/2 TYPICAL ABUTMENT SECTION

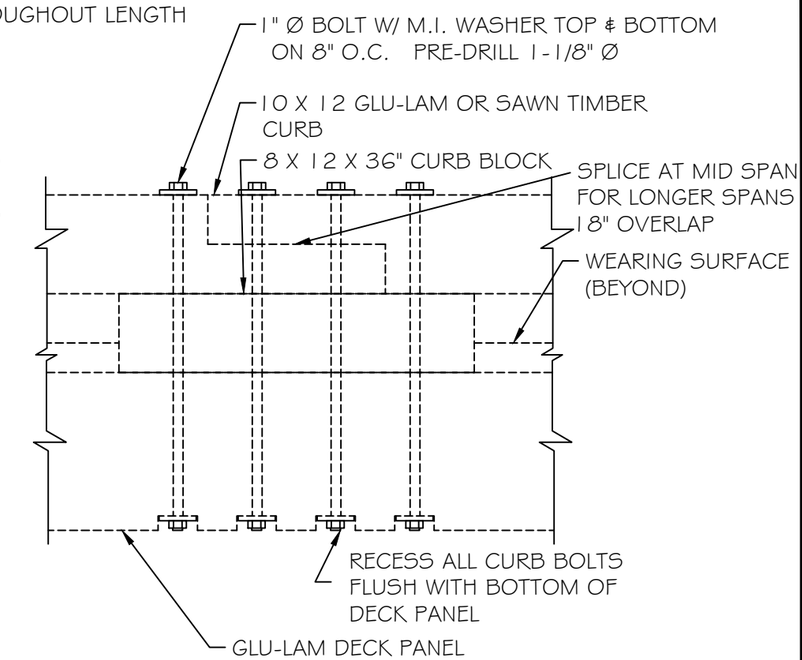

CURB CONNECTION DETAIL 'B'

NOTES:
1. ALL STEEL ANGLES AND ROLLED SHAPES SHALL BE ASTM A36 GRADE.
2. ALL STEEL NUTS & BOLTS SHALL BE ASTM A307 GRADE.
3. HOT DIP GALVANIZE ALL STEEL AFTER FABRICATION.

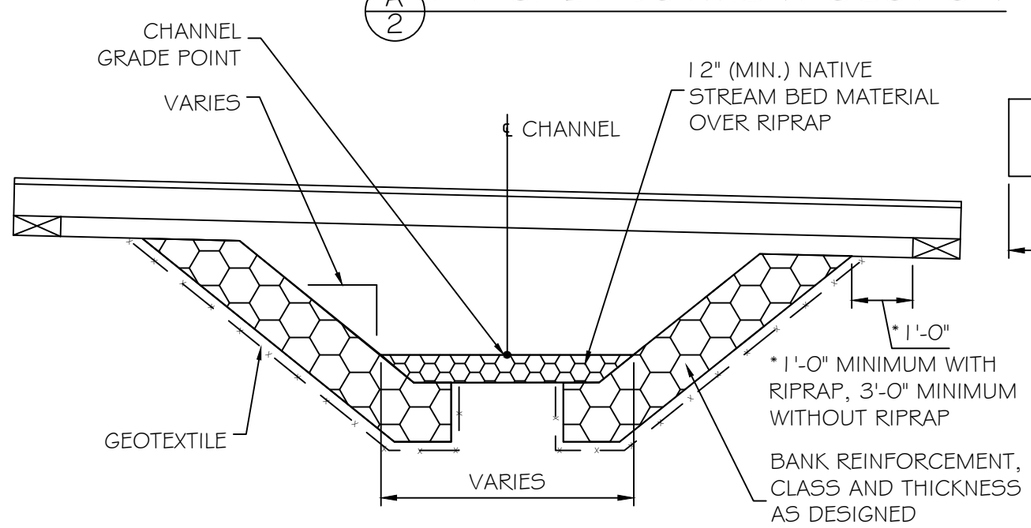

TYPICAL BRIDGE PROFILE

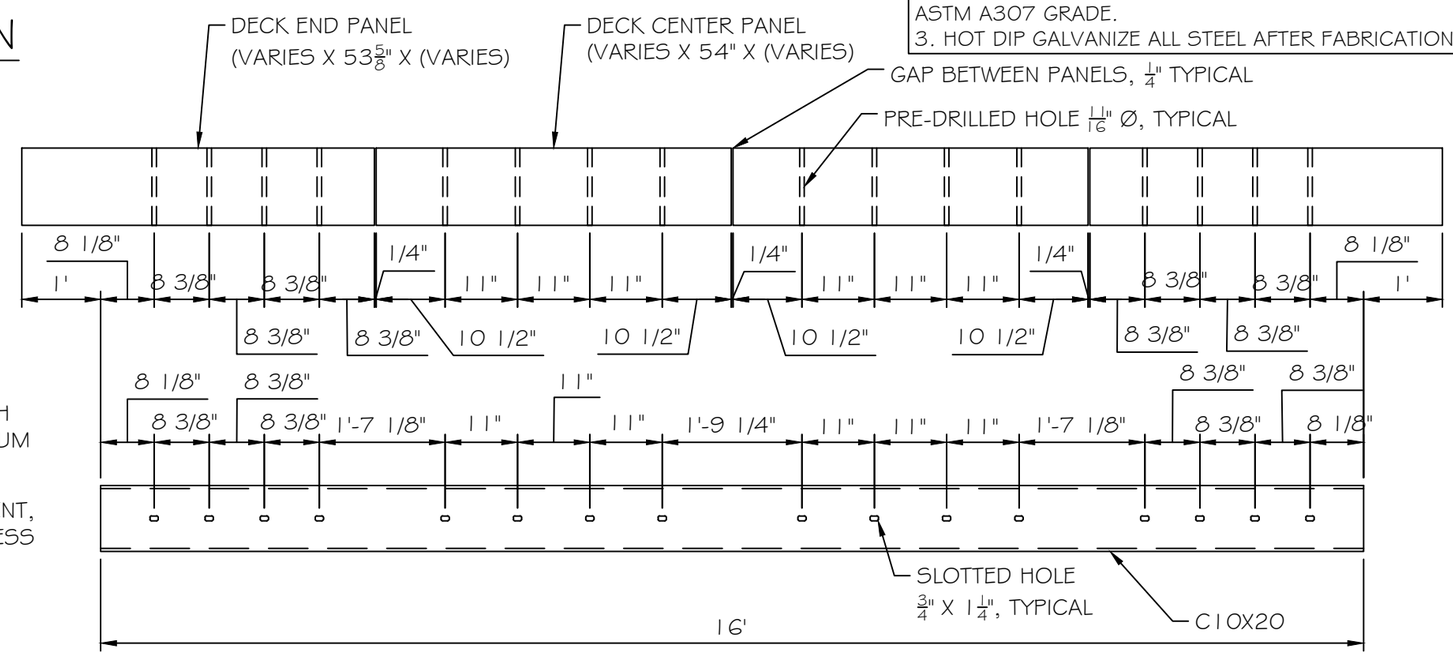

STIFFENER BEAM - PLAN VIEW

TONGASS ENGINEERING & RECREATION	DESIGNED:	DATE:	DATE:	REVISION:	BY:	BIG THORNE STEWARDSHIP ROADS	SD-320-2 TYPICAL DETAILS
	DRAWN: SJC	DATE: 2/2005	11/2005	curb detail/abutment dim.	dwv	USDA FOREST SERVICE - TONGASS NATIONAL FOREST R-10 - THORNE BAY RANGER DISTRICT	12_glulam_bridge2_revised.dwg PLOT ON 11"X17" PAPER
	REVIEWED: D. VOGAN	DATE: 11/2005					SH. 30 of 35
	TNFTYP:09/04						

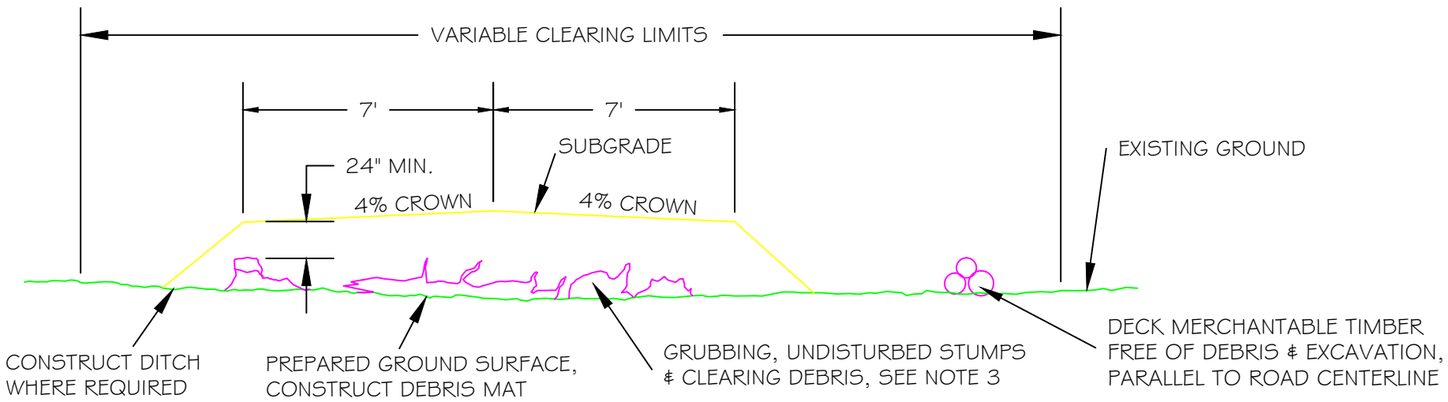

TYPICAL OVERLAY SECTION

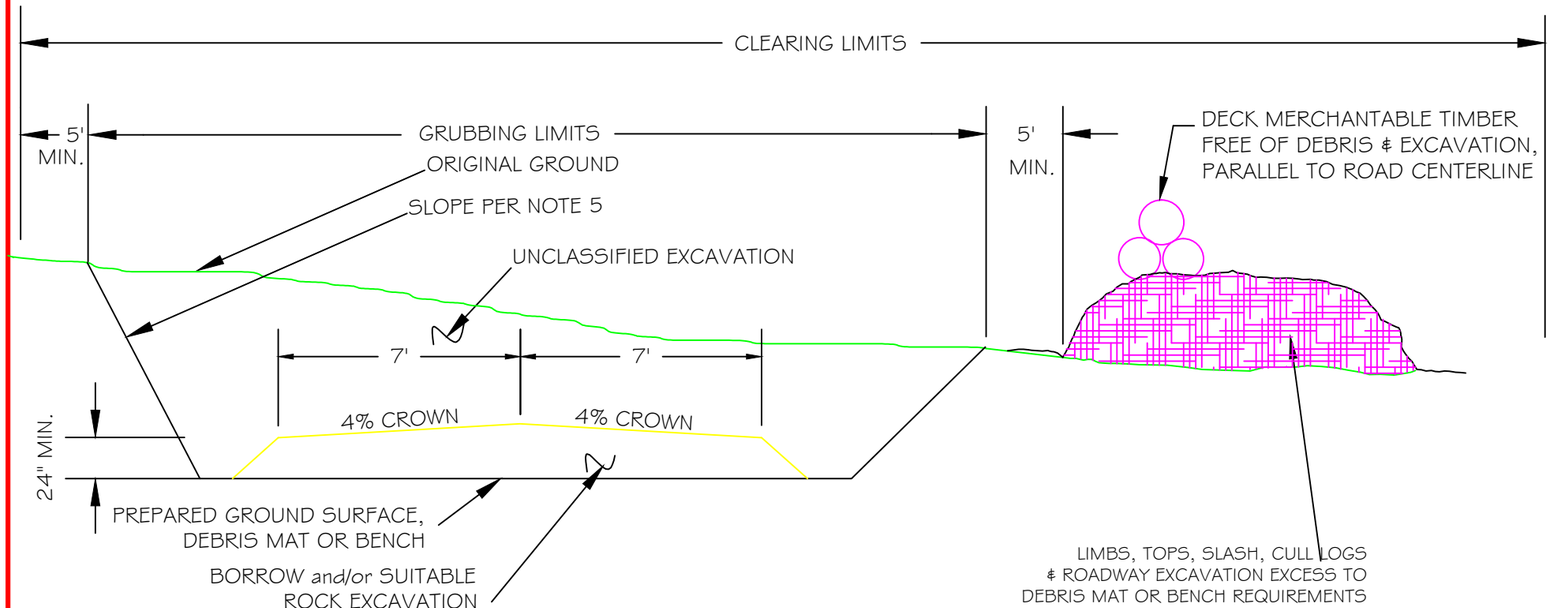

TYPICAL THROUGH CUT SECTION

NOTES

1. ROADWAY CONSTRUCTION: UNLESS OTHERWISE SHOWN THE CENTERLINE ALIGNMENT AND SUBGRADE ELEVATION, AS BUILT, SHALL HAVE NO HORIZONTAL CURVES WITH A RADIUS OF LESS THAN 80 FEET, AND NO VERTICAL CURVES WITH A CURVE LENGTH OF LESS THAN 80 FEET WHEN THE ALGEBRAIC DIFFERENCE IN THE GRADE IS LESS THAN 10 PERCENT, OR A CURVE LENGTH OF LESS THAN 100 FEET WHEN THE ALGEBRAIC DIFFERENCE OF THE GRADE CHANGE IS GREATER THAN OR EQUAL TO 10 PERCENT. THE CENTERLINE GRADE IS NOT TO EXCEED 20 PERCENT IN 100 FEET OF LENGTH. TRAVEL WAY WIDTH SHALL BE AT LEAST 14 FEET BUT NOT GREATER THAN 16 FEET. CONSTRUCTED CENTERLINE ALIGNMENT SHALL NOT DEVIATE FROM THE LOCATED CENTERLINE BY MORE THAN 20 FEET. DEVIATIONS TO ANY OF THE ABOVE SHALL BE AGREED TO IN WRITING PRIOR TO CONSTRUCTION.
2. CLEARING LIMITS: NOMINAL CLEARING LIMITS SHALL BE 46 FEET. CLEARING LIMIT MARKINGS MUST BE APPROVED IN WRITING PRIOR TO CONSTRUCTION. CLEARING LIMITS OF LESS THAN 46 FEET ARE ACCEPTABLE PROVIDING NO DEBRIS OR EXCAVATION IS PLACED AGAINST STANDING TREES AND IS APPROVED BY THE CO.
3. UNDISTURBED STUMPS AND OTHER CLEARING DEBRIS IN EMBANKMENT AREAS MAY BE LEFT IN PLACE IF THEY DO NOT EXTEND CLOSER THAN 24 INCHES TO ANY SUBGRADE (R10 FSS 201.05b)
4. UNMERCHANTABLE TIMBER AND LARGE SLASH TREATMENT FP-03-SECTION FSS 203.05(h)
5. CUT SLOPES FOR (ROCK) SHALL BE 2V:1H OR STEEPER AND 1V:1H(COMMON). FILL SLOPE SHALL BE 1V:1 $\frac{1}{4}$H.
6. CROWN TRAVELED WAY OR ROADBED 4%.
7. SEED AND FERTILIZE ALL DISTURBED AREAS AS SPECIFIED IN FP-03-SECTION FSS 625.
8. SPACING BETWEEN WATERBARS IS VARIABLE. DISTANCES BETWEEN WATERBARS SHALL BE DETERMINED IN THE FIELD BY THE ER/COR.
9. SUBGRADE IS TO HAVE 12" MINIMUM COVERAGE IN ROCK SECTIONS AND 24" MINIMUM COVERAGE IN ALL OTHER SECTIONS.
10. INTERVISIBLE TURNOUTS/PULLOUTS ARE TO BE CONSTRUCTED AT INTERVALS NOT TO EXCEED 500 FEET OR AS DIRECTED BY THE ENGINEER. EACH ROAD SHALL HAVE A PULLOUT OR TURNAROUND CONSTRUCTED AT ITS TERMINUS.
11. AVERAGE CLEARING LIMITS BY SIDESLOPE:

0% - 20% = 46 FT
20% - 40% = 50 FT
40% - 55% = 59 FT
60% - 80% = 67 FT

TONGASS ENGINEERING & RECREATION	DESIGNED: E.HARDIN	DATE:	DATE:	REVISION:	BY:		BIG THORNE STEWARDSHIP SPECIFIED ROADS	LINEAR GRADING TYPICAL SECTIONS - 1
	DRAWN:	DATE:	07/25/05	NOTE 10 ADDED	KB/VH		USDA FOREST SERVICE - TONGASS NATIONAL FOREST	ACAD.DWG
	REVIEWED:	DATE:	01/06	NOTE 11 ADDED	GWB		R-10 - THORNE BAY RANGER DISTRICT	PLOT ON 11"X17" PAPER
	TNFTYP:08/2004		03/14	DITCH & CROWN	RJ			SH.31 of 35

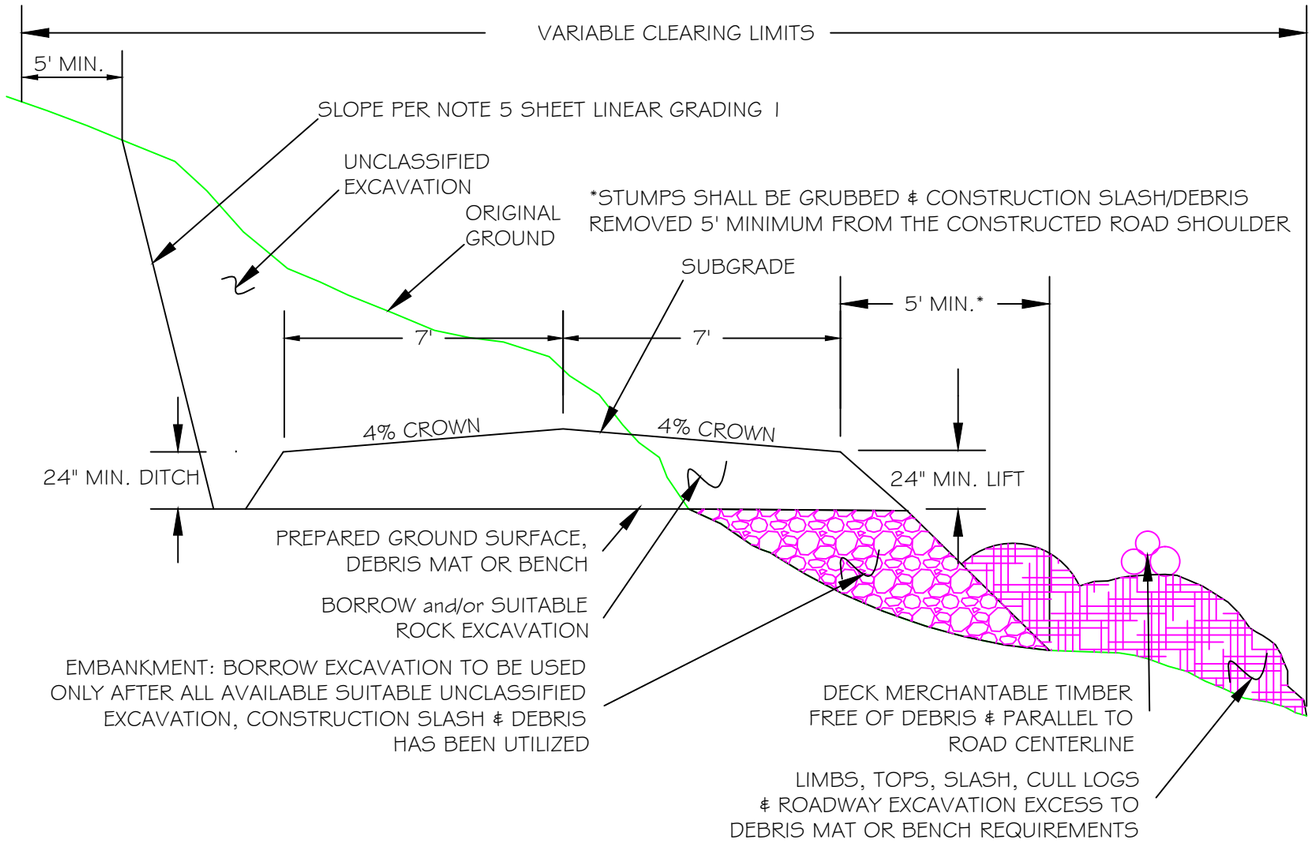

TYPICAL SIDEHILL SECTION

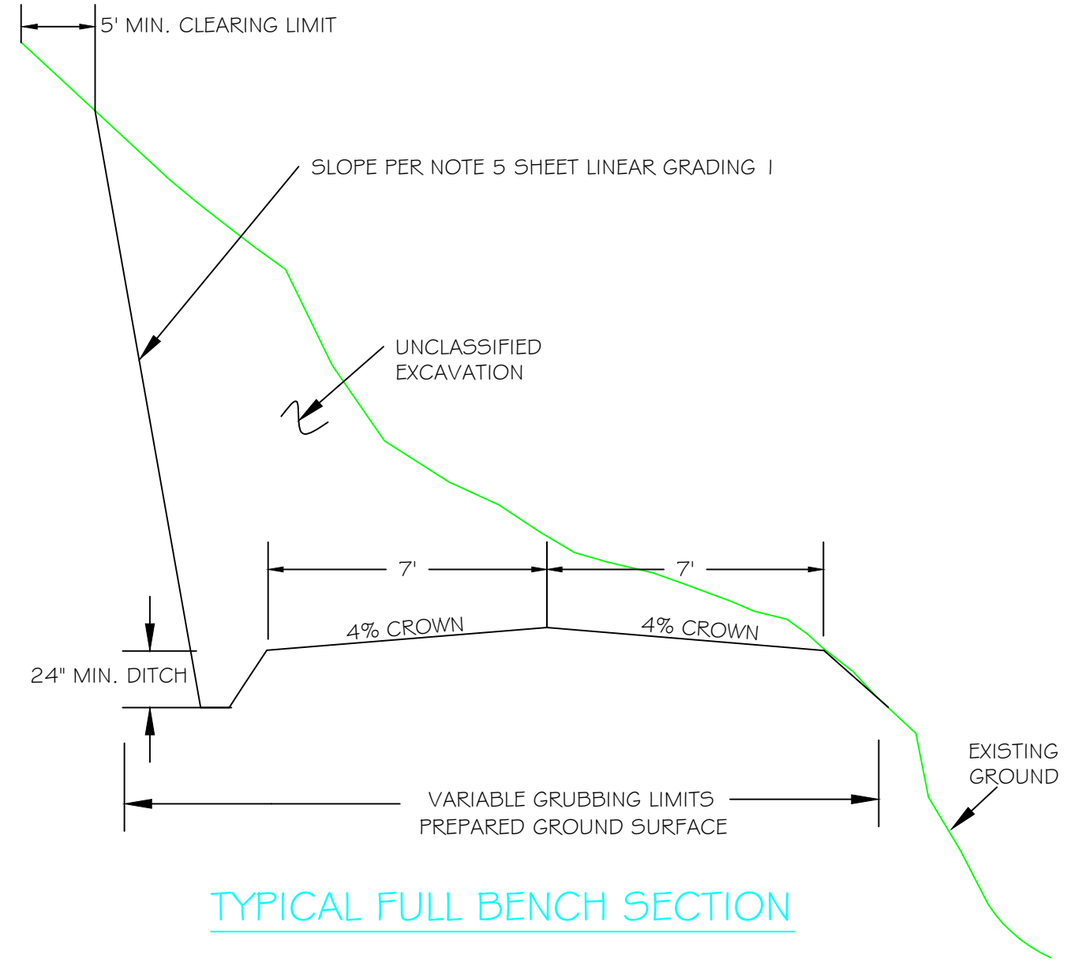

TYPICAL FULL BENCH SECTION

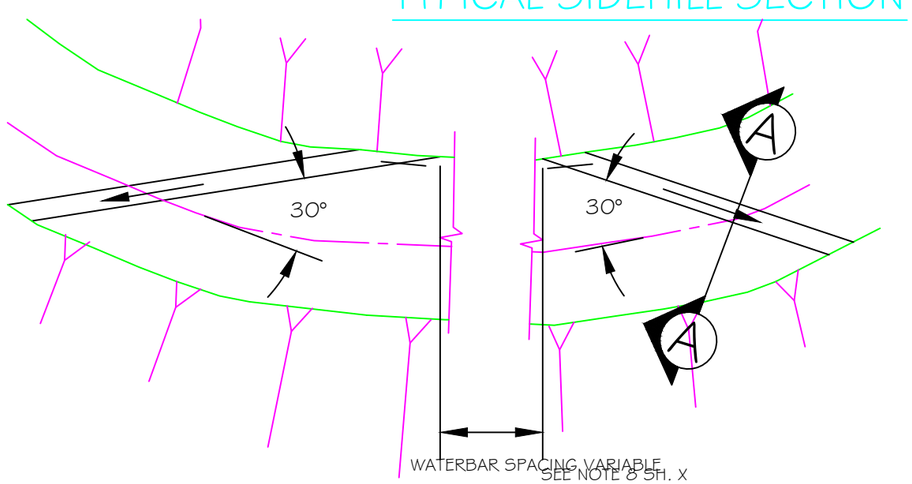

TYPICAL WATERBARS - PLAN VIEW

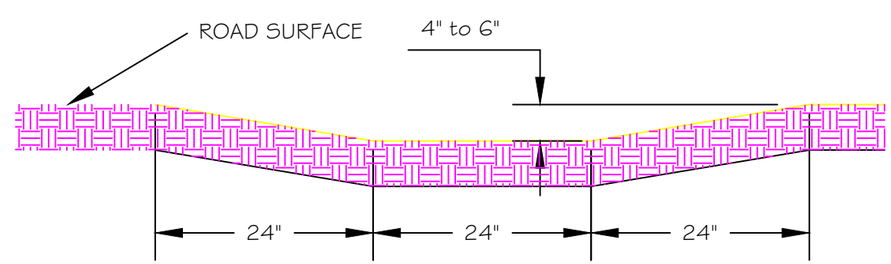

A TYPICAL WATERBAR - SECTION

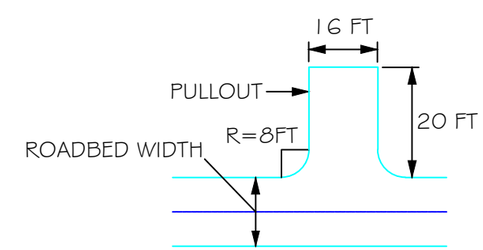

PULLOUT DETAIL

EACH ROAD WILL HAVE A PULLOUT OR TURNAROUND CONSTRUCTED AT ITS TERMINUS.

TONGASS ENGINEERING & RECREATION	DESIGNED: E. HARDIN	DATE: 2-26-08	DATE:	REVISION:	BY:	BIG THORNE STEWADSHIP SPECIFIED ROADS	LINEAR GRADING TYPICAL SECTIONS - 2
	DRAWN:	DATE:	01-05	WATERBARS	SJC	USDA FOREST SERVICE - TONGASS NATIONAL FOREST R-10 - THORNE BAY RANGER DISTRICT	ACAD.DWG PLOT ON 11"X17" PAPER
	REVIEWED:	DATE:	01-06	PULL-OUT DETAIL	GWB		SH. 32 of 35
	TNFTYP:08/2004		03/14	DITCH & CROWN	RJ		

NOTE: IN THOSE AREAS WHERE THE EXISTING ROAD, AFTER RECONDITIONING, IS WIDER THAN THE DESIGNED WIDTH OF AGGREGATE, CENTER THE LIFT OF AGGREGATE ON ROAD SURFACE AND FEATHER TO EXISTING SHOULDERS. WHEN PLACING THE ADDITIONAL WIDTH OF AGGREGATE IN TURNOUT AREAS AND SECTIONS REQUIRING CURVE WIDENING, PLACE ADJACENT TO CENTERLINE LIFT AND COMPACT TOGETHER.

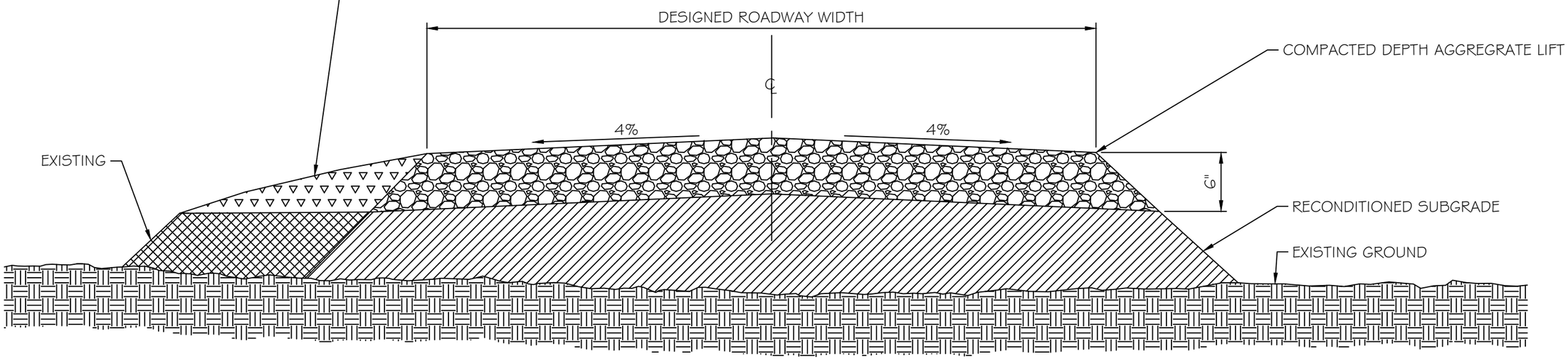

TYPICAL OVERLAY SECTION

TONGASS ENGINEERING & RECREATION	DESIGNED: X. XXXXXXX	DATE: XX/XX/XX	DATE:	REVISION:	BY:	FOREST SERVICE U.S. DEPARTMENT OF AGRICULTURE	BIG THORNE STEWARDSHIP ROADS	TYPICAL OVERLAY SECTION
	DRAWN: SJC	DATE: 1/25/05	XX/XX/XX	XXXXXXXXXX	X. XXXXXX		USDA FOREST SERVICE - TONGASS NATIONAL FOREST R-10 - THORNE BAY RANGER DISTRICT	15_typ_overlay_section[1].dwg PLOT ON 11"X17" PAPER
	REVIEWED: K. BRAY	DATE: 1/25/05	XX/XX/XX	XXXXXXXXXXXX	X.XXXXXX			SH. 33 of 35
	TNFTYP:09/04		XX/XX/XX	XXXXXXXXXXXX	X. XXXXXX			

NOTES

1. ALL PITS AND QUARRIES SHALL BE APPROVED IN WRITING BY THE C.O. PRIOR TO EXPLORATION, CLEARING OR DEVELOPMENT.
2. REMOVE ALL OVERBURDEN TO SOLID ROCK FOR A MINIMUM DISTANCE OF 15' FROM THE WORKING FACE.
3. SLOPE THE CUT BANK OF THE OVERBURDEN TO THE NATURAL ANGLE OF REPOSE BUT IN NO CASE STEEPER THAN 1:1.
4. WITHIN THE CLEARING LIMITS:
   - MAXIMUM STUMP HEIGHT SHALL BE IN ACCORDANCE WITH SPECIFICATIONS.
   - STABLE TREES UP TO 6" dbh NEED NOT BE CUT IF THEY WILL NOT INTERFERE WITH BACK SLOPE STABILITY.
   - STUMPS AND BRUSH MAY BE LEFT IN PLACE, EXCEPT THAT ALL STUMPS THAT PROTRUDE FROM EXCAVATED BANKS OR THAT HAVE THE POTENTIAL TO BECOME DISLODGED AT ANY LATER DATE SHALL BE REMOVED.
5. DISPOSE OF OR STOCKPILE FOR LATER USE ALL OVERBURDEN, CLEARING, MERCHANTABLE TIMBER AND GRUBBING DEBRIS AS SHOWN ON THE QUARRY DEVELOPMENT PLAN.
6. FELL ALL DEAD TREES AND SNAGS WHICH ARE SUFFICIENTLY TALL TO REACH THE WORK AREA.
7. LEAVE THE PIT/QUARRY IN A NEAT, ORDERLY AND WELL-DRAINED CONDITION. REMOVE ALL OVERHANGS AND LOOSE ROCK.
8. AFTER EXCAVATION IS COMPLETE CLEAN THE AREA AND LEAVE AS SHOWN ON THE QUARRY DEVELOPMENT PLAN. TREAT ANY ACCESS ROAD AS SHOWN ON THE QUARRY DEVELOPMENT PLAN.
9. TEST SHOTS OF 1300 to 2600 CUBIC YARDS ARE REQUIRED AT ALL QUARRY SITES IF DESCRIBED IN THE SPECIFICATIONS.
10. LEAVE NO MORE THAN 5% BY VOLUME OF OVERSIZE MATERIAL IN THE QUARRY. BREAK DOWN ANY MATERIAL OVER THIS VOLUME AND USE AS SPECIFIED IN SECTIONS 651.
11. PROVISIONS FOR FUTURE QUARRY DEVELOPMENT ACCESS WILL BE PROVIDED, UNLESS THIS REQUIREMENT IS WAVED BY THE CO.
12. INSTALL AND MAINTAIN A COMMERCIALLY AVAILABLE RAIN GAUGE MEASURING IN UNITS OF INCHES AND FRACTIONS OF INCHES IN ACCORDANCE WITH SECTION 205.08.
13. HAUL WILL NOT BE ALLOWED BEYOND DESIGNATED SOURCES UNLESS OTHERWISE SHOWN ON THE DRAWINGS OR AGREED TO BY THE CO.
14. SEED AND FERTILIZE ALL DISTURBED AREAS SUCH AS OVERBURDEN PILES AND BENCH SURFACES IN ACCORDANCE WITH SECTION 625.

SAMPLE QUARRY DEVELOPMENT PLAN

QUARRY DEVELOPMENT PLAN

QUARRY IS LOCATED RIGHT OF STA 27+58 ON ROAD NO. 6030
ESTIMATE OF VOLUME = 24,850 CU. YD.

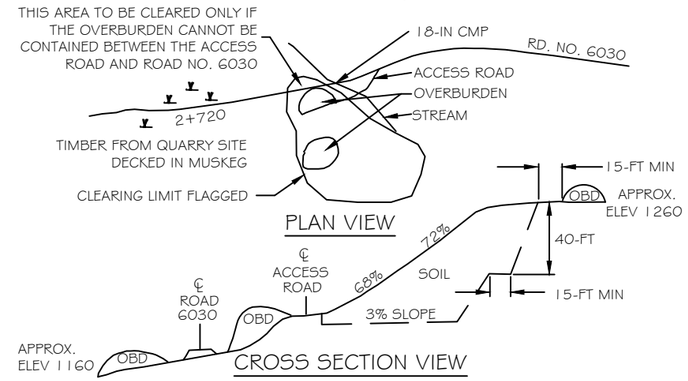

DEVELOPMENT PLAN

1. ALL MERCHANTABLE TIMBER WILL BE REMOVED FROM THE QUARRY SITE AND DECKED IN THE MUSKEG LEFT OF 27+20
2. OVERBURDEN WILL NOT BE PLACED IN THE SMALL STREAM BORDERING THE QUARRY.
3. DEVELOPMENT WILL COMPLY WITH THE GENERAL NOTES SHOWN ON THE PIT & QUARRY DEVELOPMENT TYPICAL SHEET.
4. TEST SHOT OF APPROX. 2000 CU. YD. IS PLANNED.

REHABILITATION PLAN

1. THE ACCESS ROAD WILL BE OBLITERATED BY CUTTING A DITCH AT THE JUNCTION OF THE ACCESS ROAD WITH ROAD NO. 6030 AND BY ROUGHING UP THE ACCESS ROAD SURFACE.
2. ALL OVERSIZE ROCK WILL BE PLACED AGAINST THE SIDES OF THE QUARRY NEXT TO THE BACKWALL BENCH.
3. A MINIMUM OF 12-IN OF OVERBURDEN WILL BE EVENLY SPREAD OVER THE QUARRY FLOOR.
4. ALL DISTURBED AREAS, SUCH AS OVERBURDEN PILES, BENCH SURFACES, AND ACCESS ROAD SURFACES, WILL BE SEEDED AND FERTILIZED IN ACCORDANCE WITH SPECIFICATIONS.
5. PROVISIONS FOR FUTURE QUARRY ACCESS WILL BE PROVIDED UNLESS THIS REQUIREMENT IS WAIVED BY THE COR.

CONTRACTOR DATE COR DATE DISTRICT RANGER DATE

SAMPLE QUARRY BLASTING PLAN

QUARRY BLASTING PLAN

THIS PLAN IS FOR THE FIRST TEST SHOT IN THE QUARRY
RIGHT OF STA. 27+58 ON ROAD NO. 6030

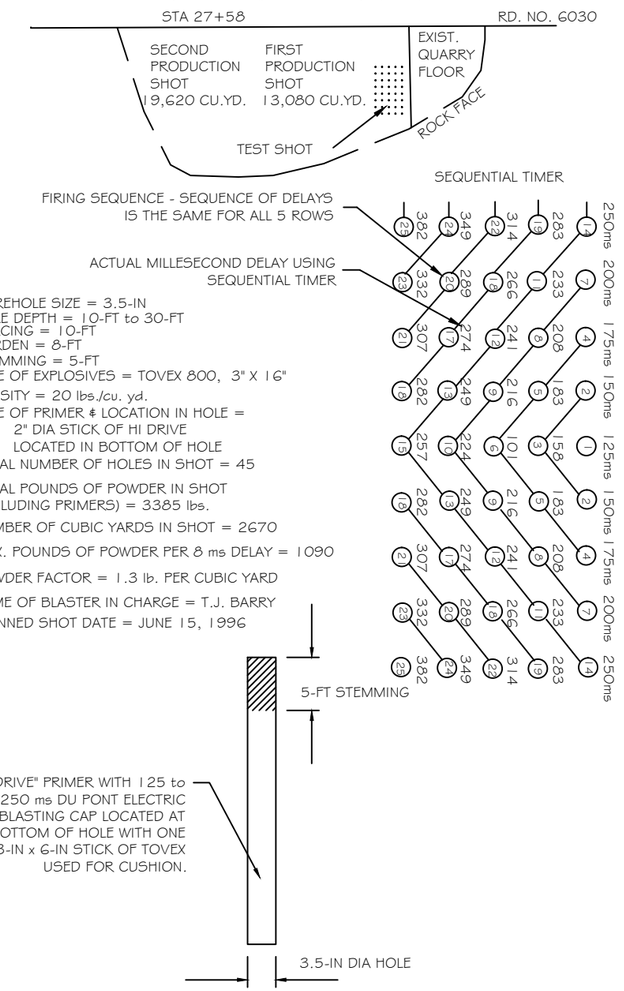

BOREHOLE SIZE = 3.5-IN
HOLE DEPTH = 10-FT to 30-FT
SPACING = 10-FT
BURDEN = 8-FT
STEMMING = 5-FT
TYPE OF EXPLOSIVES = TOVEX 800, 3" X 16"
DENSITY = 20 lbs./cu. yd.
TYPE OF PRIMER & LOCATION IN HOLE =
2" DIA STICK OF HI DRIVE
LOCATED IN BOTTOM OF HOLE
TOTAL NUMBER OF HOLES IN SHOT = 45
TOTAL POUNDS OF POWDER IN SHOT (INCLUDING PRIMERS) = 3385 lbs.
NUMBER OF CUBIC YARDS IN SHOT = 2670
MAX. POUNDS OF POWDER PER 8 ms DELAY = 1090
POWDER FACTOR = 1.3 lb. PER CUBIC YARD
NAME OF BLASTER IN CHARGE = T.J. BARRY
PLANNED SHOT DATE = JUNE 15, 1996

TYPICAL LOADED HOLE

LEGEND

- ▲ DESIGNATED MATERIAL SOURCE (ROCK QUARRY)
- ← DIRECTION OF HAUL
- MP MILE POST

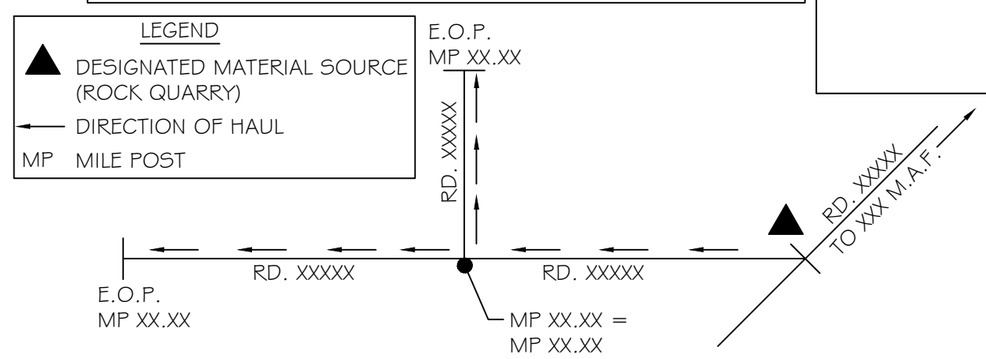

HAUL DIAGRAM

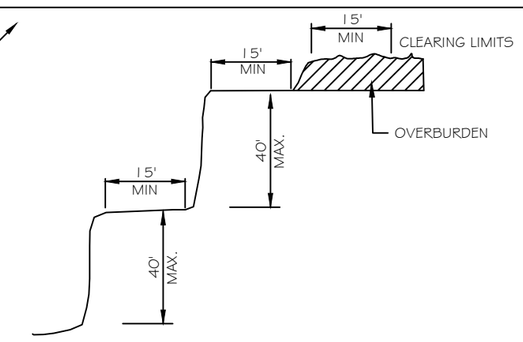

TONGASS ENGINEERING & RECREATION	DESIGNED: X. XXXXXXX	DATE: XX/XX/XX	DATE:	REVISION:	BY:	BIG THORNE STEWARDSHIP ROADS / PIT & QUARRY DEVELOPMENT
	DRAWN: SJC	DATE: 2/24/05	XX/XX/XX	XXXXXXXXXX	X. XXXXXX	USDA FOREST SERVICE - TONGASS NATIONAL FOREST
	REVIEWED: K.BRAY	DATE: 2/24/05	XX/XX/XX	XXXXXXXXXXXX	X.XXXXXX	R-10 - THORNE BAY RANGER DISTRICT
	TNFTYP:02/05		XX/XX/XX	XXXXXXXXXXXX	X. XXXXXX	16_pit_and_quarry_rev.dwg PLOT ON 11"X17" PAPER

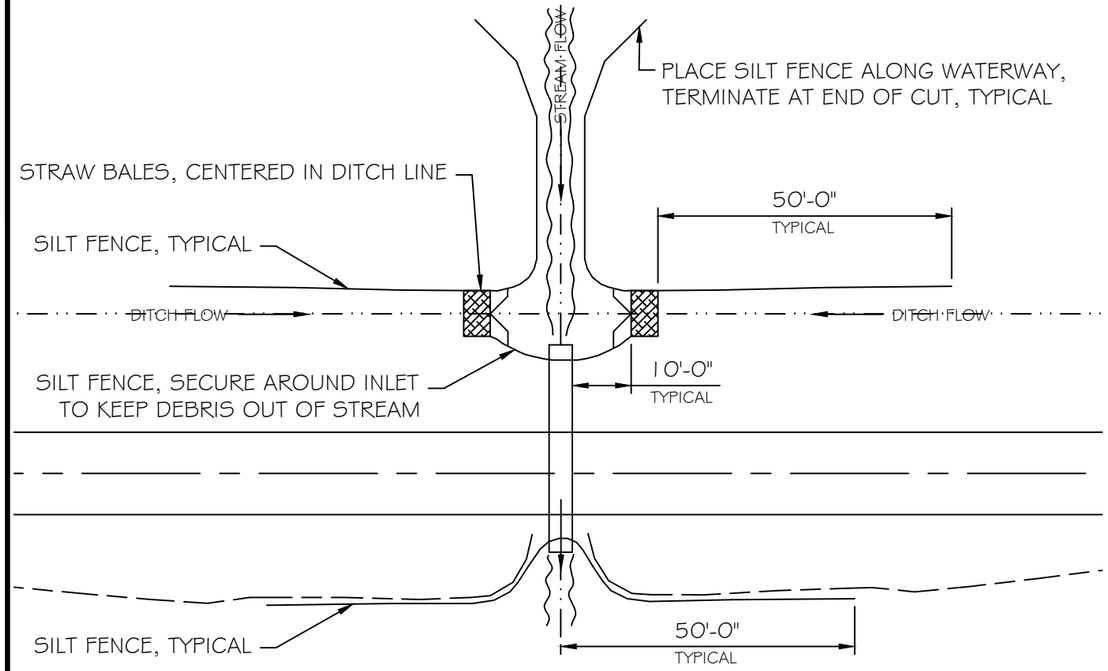

TYPICAL SEDIMENT CONTROL AT CULVERTS

NOTES:

1. SILT FENCE CONSISTS OF WOVEN WIRE FENCE FABRIC WITH A MAXIMUM 6 INCHES MESH, MINIMUM HEIGHT 30 INCHES.
2. THE CO MAY REQUIRE ADJUSTMENTS TO ACTUAL LENGTHS OR LOCATIONS TO FIT FIELD CONDITIONS.
3. INSPECT SILT FENCES AFTER EACH RUNOFF EVENT AND IMMEDIATELY REPAIR ALL EROSION ALONG EDGES AND BOTTOM.
4. ACCUMULATED DEPTH OF SEDIMENT SHALL NOT EXCEED ONE HALF THE ORIGINAL HEIGHT OF THE SILT FENCE.
5. IN AREAS DESIGNATED FOR BRUSH BARRIERS, LIMIT CLEARING TO TREES, SHRUBS AND PLANTS LESS THAN 4 INCHES IN DIAMETER. GRUBBING SHALL NOT BE PERFORMED IN THESE AREAS.
6. BRUSH BARIER SHALL BE CONSTRUCTED APPROX. PARALLEL TO ORIGINAL GROUND CONTOUR. USE WELL-INTERMINGLED MASS OF BRUSH, TREES, TRIMMINGS, ETC. BARRIER SHALL BE POROUS ENOUGH TO ALLOW WATER TO FILTER THROUGH. SECURE BY PLACING HEAVIER MATERIAL (TREES, LOGS, ETC.) ON TOP OF AND THROUGHOUT THE BRUSH.
7. ADJOIN BRUSH BARRIER WITH ROADWAY SLOPE ON THE LOW END AS NEEDED TO CONTAIN SEDIMENTS.

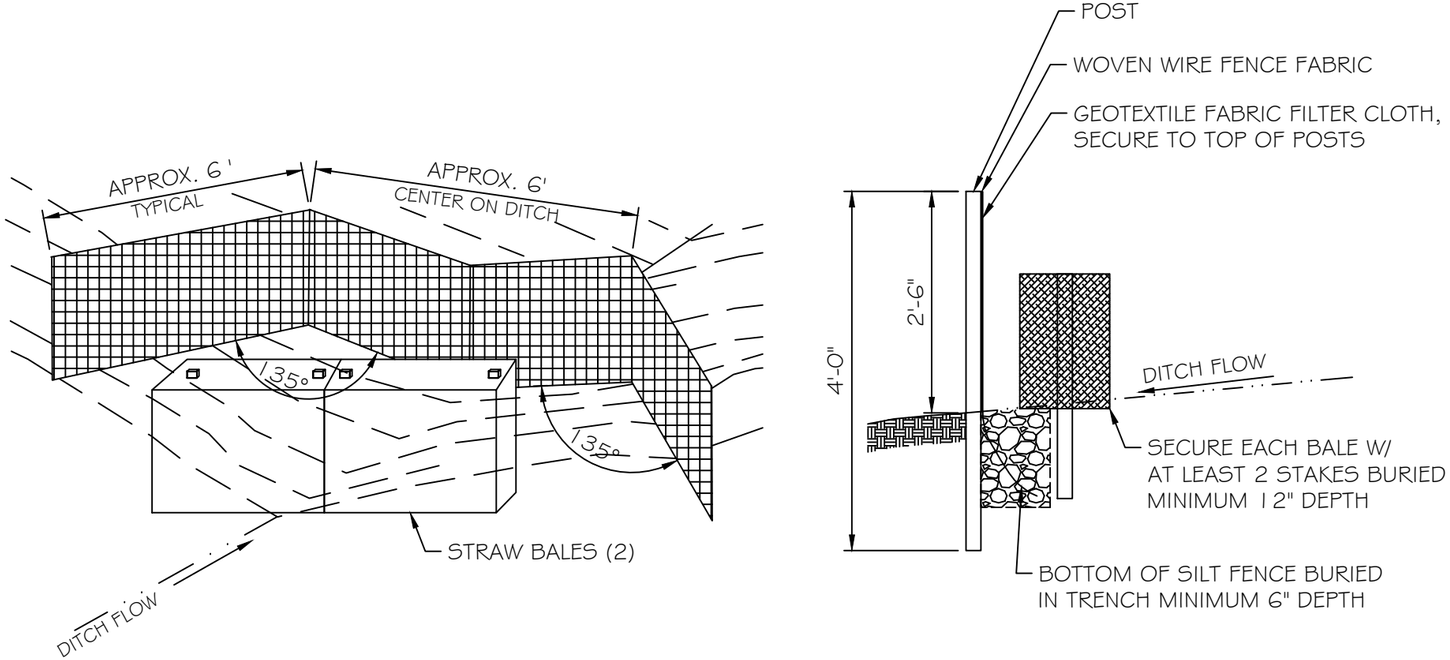

TYPICAL SILT FENCE INSTALLATION FOR DITCHES

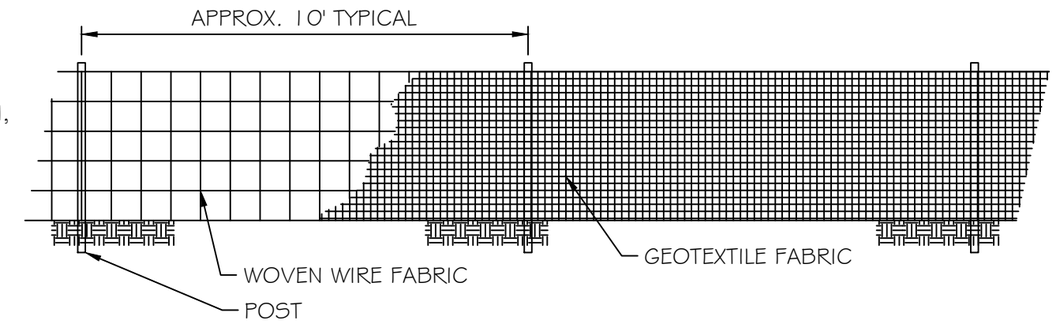

TYPICAL SEDIMENT CONTROL AT CULVERTS

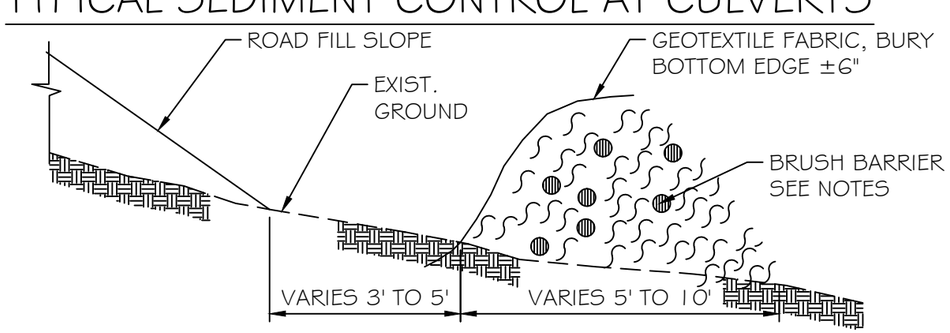

TYPICAL BRUSH BARRIER

TONGASS ENGINEERING & RECREATION	DESIGNED: X. XXXXXXX	DATE: XX/XX/XX	DATE:	REVISION:	BY:	BIG THORNE STEWARDSHIP ROADS	EROSION CONTROL DEVICES
	DRAWN: SJC	DATE: 01/2005	XX/XX/XX	XXXXXXXXXX	X. XXXXXX	USDA FOREST SERVICE - TONGASS NATIONAL FOREST	17_erosion_control.dwg
	REVIEWED: K. BRAY	DATE: 01/2005	XX/XX/XX	XXXXXXXXXXXX	X.XXXXXX	R-10 - THORNE BAY RANGER DISTRICT	PLOT ON 11"X17" PAPER
	TNFTYP: 01/05		XX/XX/XX	XXXXXXXXXXXX	X. XXXXXX		SH. 35 of 35