C2.35# (OPTION 1) - INDIVIDUAL TREE DESIGNATION. (06/2008)

DESCRIPTION

All live trees, **except as excluded below**, in all Subdivisions **except as stated below**, if it is within **see below** of a live tree with a larger stump diameter. That live tree with the largest stump diameter will remain standing after logging is complete.

ALL SUBDIVISION

Cut tree species are designated in the special instruction for each subdivision, gaps, and heavy thins areas, with all other species being treated as ghost trees (see special instruction table).

No western redcedar and orange painted trees will be cut except within the designated clearing limits for temporary roads or as designated by the Forest Service.

Minimum stump diameter is given for each cut tree species by subdivision (see special instruction table).

Maximum stump diameter is given for each cut tree species by subdivision (see special instruction table).

Regardless of maximum stump diameter, all cut tree species will be used for the purpose of determining spacing distance (see special instruction table).

Boundary trees (tags and orange paint) are ghost trees. Ghost trees are not to be used for spacing and are not to be cut or used to cut another tree.

Gaps: Center tree is marked with a "G" painted on the tree. Trees larger than the maximum stump diameter,smaller than the minimum stump diameter, ghost tree species stated for the subdivision, and orange painted trees will not be cut (see special instruction table).

Heavy thin: Boundary is marked with pink tags facing toward the heavy thin, blue boundary tags facing out, orange paint, and a combination of blue and pink ribbon. Trees larger than the maximum stump diameter, smaller than the minimum stump diameter, ghost tree species stated for the subdivision, and orange painted trees will not be cut(see special instruction table).

Skips (No Cut Areas): Boundary is marked with blue boundary tags facing away from the skip, orange paint, and a combination of blue and pink ribbon.

All skidtrails/roads and landing clearing limits shall be identified and approved per C6.42#, before this provision is implemented.

DEFINITIONS For ALL SUBDIVISIONS:

All Distances are measured slope distance, outside bark stump height to outside bark stump height.

Minimum Stump height is 10 inches on the **high side** of the tree.

Stump diameter is measured at stump height **perpendicular to the bole** of the tree.

A tree that forks below 10 inches will be considered 2 trees. A tree that forks above 10 inches will be considered one tree. This will be used for the purpose of determining the largest tree.

A tree is determined to be forked below 10 inches, if a diameter tape can be placed between the two boles, below 10 inches and each measured individually.

No windthrown trees can be removed unless otherwise agreed to by the Forest Service.

Windthrown trees are those with the root wad either exposed or partially exposed.

C2.35# Special Instructions

Unit	DxD Dist Spec (ft)	Lower D Limit Stump diameter (Inches)	Upper D Limit Stump Diameter (Inches)	Cut Tree Species	Ghost Tree Species	Additional DxD Specifications	
S9A,S9C-1, S9D,S9D-1, S9E,S9E-1, S9E-2	14	10	25	DF, WH	PSF, RA, SS, WRC	Gaps: Remove all cut-tree species between 10-25 inches stump diameter within 50 feet of trees painted with an orange band and the letter "G", unless they are marked with orange paint also.	
S9C-1,S9E, S9E-1,S9E-2 HT		10	25	DF, WH	PSF, RA, SS, WRC	Remove all cut tree species between 10-25 inches in stump diameter.	
S9C		15	24	DF, WH	PSF, RA, SS, WRC	Remove all cut tree species between 15-24 inches in stump diameter. Gaps: Remove all cut-tree species between 10-25 inches stump diameter within 50 feet of trees painted with an orange band and the letter "G", unless they are marked with orange paint also.	
S9C HT		10	24	DF, WH	PSF, RA, SS, WRC	Remove all cut tree species between 15-24 inches in stump diameter.	
S10A, S10A-1, S10A-2, S10B	16	9	24	DF, WH	PSF, RA, SS, WRC	Gaps: Remove all cut-tree species between 9-24 inches in stump diameter within 50 feet of trees painted with an orange band and the letter "G", unless they are marked with orange paint also.	
S10B-1 HT		9	24	DF, WH	PSF, RA, SS, WRC	Remove all cut tree species between 9-24 inches in stump diameter.	
S11B	15	10	24	DF, WH	PSF, RA, SS, WRC	Gaps: Remove all cut-tree species between 10-24 inches in stump diameter within 50 feet of trees painted with an orange band and the letter "G", unless they are marked with orange paint also.	
S11B HT		10	24	DF, WH	PSF, RA, SS, WRC	Remove all cut tree species between 10-24 inches in stump diameter.	
S12B	15	10	24	WH, DF	PSF, RA, SS, WRC	Gaps: Remove all cut-tree species between 10-24 inches in stump diameter within 50 feet of trees painted with an orange band and the letter “G”, unless they are marked with orange paint also.	
S12B HT		10	24	WH, DF	PSF, RA, SS, WRC	Remove all cut tree species between 10-24 inches in stump diameter.	

Stand	DxD Dist Spec (ft)	Lower D Limit Stump Diameter (Inches)	Upper D Limit Stump Diameter (Inches)	Cut Tree Species	Ghost Tree Species	Additional DxD Specifications	
48, 48A	12	9	N/A	WH, DF, SS	GF, RA, WRC	No gaps, heavy thins, or skips	
49, 49A	Diameter Limit	DF & GF: 9 WH: 14	24	DF, WH, GF	RA, SS, WRC	Remove all DF & GF species between 9-24 inches in stump diameter and WH species between 14-24 inches in stump diameter. No gaps, heavy thins, or skips	
49B, 49C,49D, 49E	12	9	N/A	DF, WH, GF	RA, SS, WRC	No gaps, heavy thins, or skips	
49F	Diameter Limit	9	27	DF, WH, RA	SS, WRC	Remove all cut tree species between 9-27 inches in stump diameter. No gaps, heavy thins, or skips	
49G, 49H	Diameter Limit	9	24	DF, WH, RA	SS, WRC	Remove all cut tree species between 9-24 inches in stump diameter. No gaps, heavy thins, or skips	
49I	Diameter Limit	10	26	DF, WH, RA	WRC	Remove all cut tree species between 10-26 in. stump diameter. No gaps, heavy thins, or skips	
49J	Diameter Limit	10	23	DF, WH, RA	WRC	Remove all cut tree species between 10-23 inches in stump diameter. No gaps, heavy thins, or skips	

C3.47# - ABNORMAL DELAY. (09/2004)

Removal Schedule:

Included Timber	Time Limits	
ALL	6	months after felling is started.
All timber decked during construction clearing	6	months after felling is started.
Timber decked during road construction	6	months after Forest Service authorizes Purchaser to use roads pursuant to B5.2.

PLANS AND CRITERIA PURSUANT TO C5.1# (OPTION 1) - TEMPORARY ROAD AND LANDING CONSTRUCTION
(01/2013)

General Temporary Roads shall facilitate the removal of Included Timber with minimum land impact during anticipated weather and soil conditions pursuant to C6.315#.

Purchaser may elect not to build all or segments of proposed Temporary Roads if purchaser can otherwise log Included Timber in accordance with contract provisions. In accordance with B5.1, Purchaser may also propose alternate locations and/or additional Temporary Roads. Such proposals must be submitted to Forest Service in writing and approved prior to the start of construction. Forest Service makes no guarantee regarding agreement to alternate locations and/or additional Temporary Roads.

Purchaser retains the final responsibility for determining the location, extent, feasibility, and suitability of all Temporary Roads. Forest Service shall not be liable for any variation in quantity, extent, location, materials, or specifications with regard to temporary roads.

Material Sources Designated sources for Temporary Road and Landing construction are shown on the Sale Area Map. Source areas shall be marked on the ground by Forest Service prior to development to prevent conflict with other users.

Design. Temporary Roads shall be single lane with a maximum surface width necessary to accommodate logging equipment. Clearing widths shall be agreed to prior to construction and shall be 16 feet excluding curve widening and turnouts unless otherwise designated by Forest Service. Turnouts do not need to be inter-visible, but shall be of sufficient quantity on longer roads to provide safe access.

Temporary Roads shall be planned for self-balance. Full bench construction is required on slopes greater than 40 percent.

Surfacing shall be applied as necessary to provide for erosion control and to allow safe and reasonable access pursuant to C6.315#.

Road surface drainage shall be sufficient to control water flow and provide erosion control. Drainage management may consist of ditches, ditch relief and cross drain culverts, insloping or outsloping, surfacing, drainage dips, water bars, silt fencing, sediment traps, or a combination of methods as needed or as directed by Forest Service in writing.

Right-Of-Way All merchantable timber within clearing limits of Temporary Roads shall be designated by Forest Service prior to felling. Timber meeting Utilization Standards shall be utilized in accordance with A2 and B2.2.

Right-of-way timber shall be felled into right-of-way clearings whenever possible. Controlled felling shall be used to ensure the direction of fall when necessary to prevent damage to property, improvements, trees designated to remain, and/or traffic.

If needed for safety, Forest Service shall authorize the falling of snags and hazard trees outside of clearing limits. Felled snags and hazard trees shall not be removed unless Forest Service agrees to removal in writing.

Branches of remaining trees or shrubs inside designated clearing limits shall be limbed to a height of 14 feet above the roadbed.

Construction All suitable material excavated within designated clearing limits shall be utilized in the construction of embankments, subgrades, shoulders, slopes, bedding, surfacing, and backfill for structures.

Excess excavation material shall be disposed of at locations designated on the Sale Area Map, or as agreed to in writing.

Woody debris from clearing and grubbing shall be disposed of in accordance with C6.74# or according to alternate methods agreed to in writing. Such debris shall not be disposed of or scattered in such a manner that the debris could enter stream courses.

Roller compaction is not required on Temporary Roads. Purchaser may elect to do so at their own expense.

Stream Crossings
Drainages and stream channels shall be crossed by the use of culverts or bridges. Log puncheons and/or brush crossings are not permitted.

The timing of in-stream work shall be in accordance with C6.315#. De-watering is required prior to work in live streams.

The minimum diameter for all ditch relief and cross drain culverts is 18 inches.

The minimum diameters for in-stream culverts may vary according to channel width and drainage area as well as length of time in place (single operating season vs. multiple operating seasons, refer to Table 1). If purchaser elects minimum diameters, all such culverts may be left in place for a single operating season only and shall be removed prior to seasonal shut periods specified in C6.315# or the onset of seasonal wet weather conditions if no seasonal shutdown period is specified in C6.315#. If purchaser wishes to leave in-stream culverts in place through multiple operating seasons, purchaser must install the larger of the two diameters specified in Table 1.

Culverts may be plastic, aluminum, or steel. Culverts shall be structurally sound, free of foreign material, and functional when installed. Culverts may be re-used within the Sale Area. Existing culverts may be utilized in place where appropriate.

Maintenance and Operation Temporary Roads shall be maintained as necessary to prevent resource damage. Primary emphasis shall be placed on maintaining drainage systems and preventing erosion.

A temporary closure device, as agreed, shall be installed at temporary road entrances when the Sale Area is accessible to the general public (cable devices are not permitted).

Obliteration Unless identified on the Sale Area Map, Temporary Roads and Landings constructed under this provision shall be scarified, water barred, blocked to traffic, and seeded and mulched in accordance with B6.63 and C6.6#. Cuts and fills shall be returned to slope and all end-hauled material shall be replaced as directed by Forest Service. Coarse woody debris shall be replaced as directed by Forest Service and may be utilized in lieu of seeding and mulching if agreed to in writing.

All purchaser-installed culverts and other improvements on Temporary Roads shall be removed from National Forest lands prior to final acceptance of all contractually required work.

TABLE 1

Road Name	Station (Approx.)	Purpose	Single Season Diameter (Inches)	Multi-Season Diameter (Inches)	Rock Source (Fill) PIT RUN
N/A	N/A	In-Stream	N/A	N/A	N/A

C5.12# - USE OF ROADS BY PURCHASER (6/99) Purchaser's use of existing roads identified on Sale Area Map by the following codes is prohibited or subject to restrictive limitations, unless agreed otherwise:

Code	Use Limitations
X	Hauling prohibited
R	Hauling restricted
U	Unsuitable for hauling prior to completion of agreed reconstruction
P	Use prohibited
A	Public use restriction
W	Regulation waiver

Roads coded A will be signed by Purchaser to inform the public of use restrictions. Purchaser's use of roads coded R, A, or W shall be in accordance with the following restrictions:

Restricted Road List

Road Number	Road Name	Termini		Map Legend	Description of Restrictions
		From	To		
2900	"A" Road	15.5	18.5	A	Public Use Restricted during skyline yarding.
2900	"A" Road Bridges			R	**1/**
2900015_1	D	0.0	1.55	A	Public Use Restricted Logging Use Only

1/ An approved bridge overload permit is required for any vehicle which exceeds the gross vehicle weight of 80,000 pounds (established by the Federal bridge formula), if single or tandem axle loads exceed 20,000 or 34,000 pounds respectively, or if the vehicle exceeds the posted load limits of a bridge. Issuance of a USDA Forest Service permit does not authorize the use of the permit vehicle on public highways of the state or other roadways and vice versa.

C5.31# – ROAD MAINTENANCE REQUIREMENTS. (7/01) Purchaser shall maintain roads in accordance with the following Contract Road Maintenance Requirements Summary:

Contract Road Maintenance Requirements Summary

Road	Termini		Miles	Applicable Prehaul Road Maintenance Specifications									
	From	To		T-803	T-811	T-831	T-834	T-838	T-842				
2900000	10.5	18.2	7.7			P	P	P	P				
2900015	0.0	0.1	0.1					P					

P = Purchaser Performance Item, D = Deposit to Forest Service, D3 = Deposit to Third Party

Road	Termini		Miles	Applicable During Haul Road Maintenance Specifications									
	From	To		T-803	T-811	T-813	T-831	T-834	T-838	T-842			
2900000	0.0	18.2	18.2	P	P	P	P	P	P	P			
2900015	0.0	1.65	1.65	P	P	P	P	P	P	P			

P = Purchaser Performance Item, D = Deposit to Forest Service, D3 = Deposit to Third Part

Road	Termini		Miles	Applicable Post Haul Road Maintenance Specifications									
	From	To		T-803	T-811	T-813	T-831	T-834	T-835	T-838	T-839	T-842	
2900000	10.5	18.2	7.7		P	P	P	P		P		P	
2900015	0.0	1.65	1.65		P		P	P	P		P		

P = Purchaser Performance Item, D = Deposit to Forest Service, D3 = Deposit to Third Party

C6.315# Operation Schedule

Subdivision	Jan 1	Jan 15	Feb 1	Feb 15	Mar 1	Mar 15	Apr 1	Apr 15	May 1	May 15	Jun 1	Jun 15	July 1	July 15	Aug 1	Aug 15	Sept 1	Sept 15	Oct 1	Oct 15	Nov 1	Nov 14	Dec 1	Dec 15
48											#	#	#	#	#	#	#							
48A											#	#	#	#	#	#	#							
49											#	#	#	#	#	#	#							
49A											#	#	#	#	#	#	#							
49B											#	#	#	#	#	#	#							
49C											#	#	#	#	#	#	#							
49D											#	#	#	#	#	#	#							
49E											#	#	#	#	#	#	#							
49F											#	#	#	#	#	#	#							
49G											#	#	#	#	#	#	#							
49H											#	#	#	#	#	#	#							
49I											#	#	#	#	#	#	#							
49J																								
4B																								
S10A	^	^	^	^											$	$	$	^	^	^	^	^	^	^
S10A-1	^	^	^	^											$	$	$	^	^	^	^	^	^	^
S10A-2	^	^	^	^											$	$	$	^	^	^	^	^	^	^
S10B																								
S10B-1																								
S11B											#	#	#	#	#	#	#							
S12B	^	^	^	^											$	$	$	^	^	^	^	^	^	^
S9A	^	^	^	^											$	$	$	^	^	^	^	^	^	^
S9C	^	^	^	^											$	$	$	^	^	^	^	^	^	^
S9C-1	@^	@^	@^	@^	@	@	@	@	@	@	@	@	@	@	@$	@$	@$	@^	@^	@^	@^	@^	@^	@^
S9D	@	@	@	@	@	@	@	@	@	@	@	@	@	@	@	@	@	@	@	@	@	@	@	@
S9D-1	@	@	@	@	@	@	@	@	@	@	@	@	@	@	@	@	@	@	@	@	@	@	@	@
S9E	^	^	^	^											$	$	$	^	^	^	^	^	^	^
S9E-1	^	^	^	^											$	$	$	^	^	^	^	^	^	^
S9E-2	^	^	^	^											$	$	$	^	^	^	^	^	^	^
Wet weather haul agreement needed	x	x	x	x	x	x	x	x	x	x											x	x	x	x
Road construction, reconstruction and obliteration (temporary and specified) are allowed between 2 hours after sunrise and 2 hours before sunset. (Marbled Murrelet)											x	x	x	x	x	x	x							

C6.315# Operation Schedule

	Jan 1	Jan 15	Feb 1	Feb 15	Mar 1	Mar 15	Apr 1	Apr 15	May 1	May 15	Jun 1	Jun 15	July 1	July 15	Aug 1	Aug 15	Sept 1	Sept 15	Oct 1	Oct 15	Nov 1	Nov 14	Dec 1	Dec 15
Road construction, reconstruction, and obliteration (temporary and specified) is allowed without the 2 hour restrictions. (Sedimentation)												x	x	x	x	x	x	x	x	x				
All instream culvert work is allowed. (Fish)														x	x	x	x	x						

@ Year round operations allowed.
# All falling, yarding and hauling operations shall occur between 2 hours after sunrise and 2 hours before sunset between June 1 and September 15 (inclusive) and year round operations outside this period. Prevention of disturbance to Spotted Owl and Marbled Murrelet.
$ All falling, yarding and hauling operations shall occur between 2 hours after sunrise and 2 hours before sunset between August 6 and September 15 (inclusive). Prevention of disturbance to Marbled Murrelet.

^ All falling, yarding and hauling operations shall occur between September 16 and February 28 (inclusive) with no 2 hour restrictions. Spotted Owl and Marbled Murrelet breeding seasons

C6.315# - SALE OPERATION SCHEDULE. (6/94) Unless otherwise agreed to between Purchaser and Forest Service, Purchaser's Operations shall be performed in accordance with the following schedule:

Subdivisions	Operation Conditions	Purpose
S9C-1,S9D,S9D-1	Year round operations allowed.	
S11B, 48, 48A, 49,49A,49B,49C, 49D,49E,49F,49G 49H,49I	All falling, yarding and hauling operations shall occur between 2 hours after sunrise and 2 hours before sunset between June 1 and September 15 (inclusive) and year round operations outside this period.	Prevention of disturbance to Spotted Owl and Marbled Murrelet.
S9A,S9C,S9C-1, S9E,S9E-1, S9E-2, S10A, S10A-1, S10A-2, S12B	All falling, yarding and hauling operations shall occur between 2 hours after sunrise and 2 hours before sunset between August 6 and September 15 (inclusive).	Prevention of disturbance to Marbled Murrelet.
S9A, S9C, S9C-1, S9E, S9E-1, S9E-2, S10A, S10A-1, S10A-2, S12B	All falling, yarding and hauling operations shall occur between September 16 and February 28 (inclusive) with no 2 hour restrictions.	Spotted Owl and Marbled Murrelet breeding seasons
All	Haul operations that occur between November 1 and May 31 (inclusive) require a Wet Weather Haul agreement between the Purchaser and Forest Service. Some requirements may include silt fencing, straw mulch, spot rocking,and other forms of sedimentation reduction devices and/or purchaser self suspension of haul.	Reduction of sedimentation.
All	Road construction, reconstruction and obliteration(temporary and specified) are allowed between 2 hours after sunrise and 2 hours before sunset June 1 to Sept. 15.	Prevention of disturbance to Marbled Murrelet.
All	Road construction, reconstruction and obliteration is allowed between June 1 and October 31, unless otherwise agreed to by the Forest Service.	Reduction of sedimentation.
All	All instream culvert work is allowed between July 15 and September 30. Operations may be allowed outside this window after consultation with the Forest Service fisheries biologist and the WA State Dept. of Fish and Wildlife.	Reduction of potential impact to fish.

TABLE PURSUANT TO C6.41# - SPECIFIC REQUIREMENTS *(01/2000)*

FELLING METHODS	SUBDIVISIONS
Directional felling away from adjacent ownerships, land survey monuments, residual and adjacent stands, when within 66 feet of timber edge along streamcourses, and FSR 2900 and 2900015. Timber designated to be cut shall be felled in a manner to maximize protection of residual trees and facilitate all yarding operations, unless otherwise agreed to in writing by the Forest Service.	All

FELLING EQUIPMENT	SUBDIVISIONS
Wedges, or jacks as needed	All

C6.42# - TABLE PURSUANT TO 6.42# - YARDING/SKIDDING REQUIREMENTS *(02/2002)*

YARDING/SKIDDING REQUIREMENTS	SUBDIVISIONS
Ground based equipment and single span skyline required, as indicated on the Sale Area and Slash Disposal Map.	All
Dedicated ground based skidtrails/roads shall be no closer than 110 feet apart center to center (except where converging) and will not exceed 12 feet in width.	48, 48A, 49, 49B, 49C, 49D, 49G, 49H, S9A, S9C, S9C-1, S9D, S9D-1, S9E, S9E-1, S9E-2, S10A, S12B
Dedicated ground based skidtrails/roads shall utilize a sufficent layer of slash and unmerchantible material to minimize rutting as much as practible.	48, 48A, 49, 49B, 49C, 49D, 49G, 49H, S9A, S9C, S9C-1, S9D, S9D-1, S9E, S9E-1, S9E-2, S10A, S12B
Skyline corridors will be no closer than 120 feet apart center to center and will not exceed 12 feet in width for parallel roads. Skyline corridors will be parallel to each other where feasible.	All
Skyline corridors will be no closer than 150 feet apart center to center at the tailhold or tailtree and will not exceed 12 feet in width for wheel spoked roads.	All
Skidtrails/roads shall minimize disturbance to existing large down logs and felled hazard trees. If such logs are moved, they will be replaced as directed by the Forest Service.	48, 48A, 49, 49B, 49C, 49D, 49G, 49H, S9A, S9C, S9C-1, S9D, S9D-1, S9E, S9E-1, S9E-2, S10A, S12B
Skidtrails/roads/landings shall impact less than 20% of the sale area.	All
Leading end of logs shall be suspended above ground during yarding and/or loader swing operations.	All
Log lengths shall not exceed 40 feet plus trim and may be reduced if damage occurs to the residual stand. Log lengths may be increased only when approved in writing by the Forest Service.	All
Felling leave trees to free hung up trees will not be allowed.	All
Severely damaged rub trees shall not be cut until skidding operations are completed. Rub trees shall be designated to be cut unless otherwise directed in writing by the Forest Service.	All
All yarding operations shall result in no more than 15% of the residual trees receiving damage. No more than 10% of the residual trees may have damage exceeding 16 square inches. Damage is defined as exposure or breakage of the cambial layer of the bole or root collar.	All

No trees over the maximum stump diameter, as stated in C2.35#, will be allowed to be cut during skid road construction (ground based), unless designated by the Forest Service.	48, 48A, 49, 49B, 49C, 49D, 49G, 49H, S9A, S9C, S9C-1, S9D, S9D-1, S9E, S9E-1, S9E-2, S10A, S12B
Groundbased landings adjacent to any haul roads will be a minimum of 50 feet off the road surface, if feasible, unless otherwise agreed to in writing by the Forest Service.	48, 48A, 49, 49B, 49C, 49D, 49G, 49H, S9A, S9C, S9C-1, S9D, S9D-1, S9E, S9E-1, S9E-2, S10A, S12B
Protect all snags. However, if logging safety is jeopardized, snags may be felled and then left in the stand as coarse woody debris	All
Dedicated ground based skidtrails/roads shall be no closer than 60 feet from subdivision boundary unless otherwise agreed to by the Forest Service.	48, 48A, 49, 49B, 49C, 49D, 49G, 49H, S9A, S9C, S9C-1, S9D, S9D-1, S9E, S9E-1, S9E-2, S10A, S12B
Ground based yarding operations with tractors will not operate on slopes exceeding 30%, or 50% with feller/bunchers, unless otherwise agreed to by the Forest Service.	48, 48A, 49, 49B, 49C, 49D, 49G, 49H, S9A, S9C, S9C-1, S9D, S9D-1, S9E, S9E-1, S9E-2, S10A, S12B
Logging plan maps designed by the Forest Service are for establishing average yarding distances for appraisal purposes only and are not part of this contract.	All
The locations of all skidtrails and skyline corridors will be approved prior to felling operations.	All

APPLICATION SCHEDULE PURSUANT TO C6.6# - EROSION CONTROL AND SOIL TREATMENT BY PURCHASER
(07/2001)

	AREAS	SEED		FERTILIZER		MULCH	
SUBDIVISION OR UNIT NUMBER	A) SKID TRAILS B) FIRELINES C) TEMP. ROADS D) LANDINGS E) OTHER	APPLICATION		APPLICATION		APPLICATION	
		SPECIES MIXTURE	LBS/AC	TYPE 1/	LBS/AC	TYPE 2/	LBS/AC
All	A,C,D,E	Furnished by the Government	15			Straw or Wood	4,000

1/ Fertilizer shall be a standard commercial fertilizer with guaranteed analysis of contents clearly marked on containers.

2/ Mulch shall meet Washington’s weed free certification specifications, with evidence of its certification traceable to the certifying agency's records.

SPECIFICATIONS PURSUANT TO C6.74# - SLASH TREATMENTS REQUIREMENTS
(02/2002)

Slash Plan

Slash outside cutting boundaries
System road slash
Landing slash
Temporary road slash
Leave tops in subdivisions
Directional felling and pull back slash
Limb logs in subdivisions

I. Slash outside cutting boundaries
All slash that is created outside the cutting boundaries will be pulled back into the subdivisions and scattered outside the designated pull back areas as shown on the Sale Area and Slash Disposal Map.

II. System road slash
Purchaser shall clear all slash created by harvest operations from the surfacing the 2900 and 2900015 roads. Ditches shall be cleared of all harvest operation slash.

III. Landing slash

Subdivisions:

Any subdivision with cable yarding
All landing slash at landing locations on the 2900 and 2900015 roads will be piled and covered.

Landing piles shall be a minimum of 8 feet from adjacent timber. Pile height shall be at least two-thirds that of the width and be free of noncombustible material including soil. Piles will be covered with Kraft 30-30-30 paper or polyethylene plastic or equivalent having a minimum of .012 inch thickness or equivalent. Covering shall be placed midway vertically in the pile in one continuous sheet covering not less than 60 percent of the surface area of the pile. Slash will be placed on top of cover material to hold it in place. Covering will be concurrent with piling.

Subdivisions:

Any subdivision with ground-based skidding
For landings in the above designated subdivisions slash shall be removed from landing areas and distributed evenly over skid roads and skyline corridors used within the subdivisions concurrent with yarding.

IV. Temporary roads
Slash created by opening existing or constructed temporary roads within 66 feet (slope distance) of the timbered edge along the 2900 road will be pulled back into the subdivision and evenly distributed to a depth of 2 feet. For all other areas slash shall be scattered evenly to a depth of 2 feet or less within subdivisions. Stumps shall be scattered outside clearing limits as not to interfere with yarding operations or protection of residual trees.

V. Leave tops in subdivisions
Top unmerchantable portion of all included timber shall be bucked and left within subdivisions except in areas designated for pull back as shown on Sale Area and Slash Disposal Map. Ground based equipment may use this material within skid trails/roads and processor paths to reduce ground impacts but within areas designated for pull back, the slash used on skid trails/roads shall not result in a continuous fuel bed.

VI. Directional felling and pull back Slash

Subdivisions: ALL
Directional felling of timber and slash will be pulled back 66 feet (slope distance) away from treated edge along 2900, 2900015 and Forest Service Boundary. All slash with a diameter of 1/4 inch to 5 inch and 3 feet in length or greater shall be pulled back 66 feet (slope distance) and scattered to a depth no greater than 2 feet. Material larger than 5 inches does not need to be pulled back provided all limbs are removed and pulled back 66 feet (slope distance).

VII. Limb logs in subdivisions
Logs must be limbed on 3 faces prior to yarding.

C6.851 - WEIGHT OF LOST LOADS (06/13)

If weight (TON) is the unit of measure for payment purposes, Purchaser shall present all loads for weighing and shall furnish a weight ticket for each load pursuant to a weighing services agreement. Any load for which no weight ticket is furnished shall be considered a lost sample load with a weight equal to the weight of the heaviest load presented during the billing period, as established by the Forest Service.

ROAD CLOSURE – EARTH MOUND TYPICAL

PROJECT	SHEET	TOTAL SHEETS

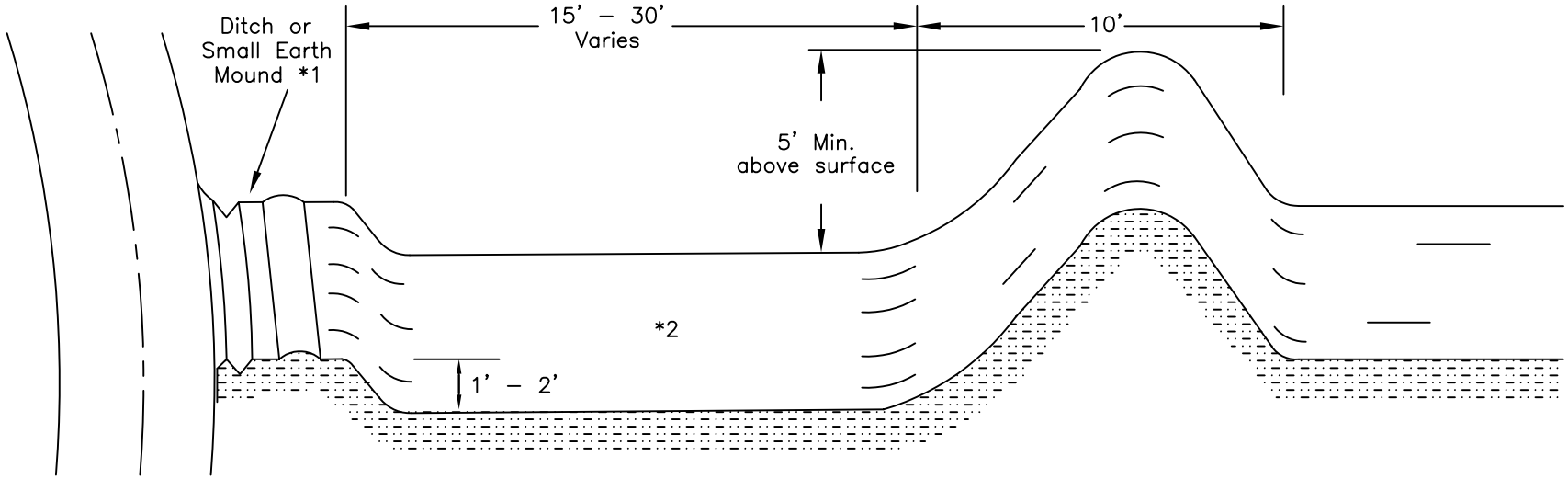

ISOMETRIC VIEW

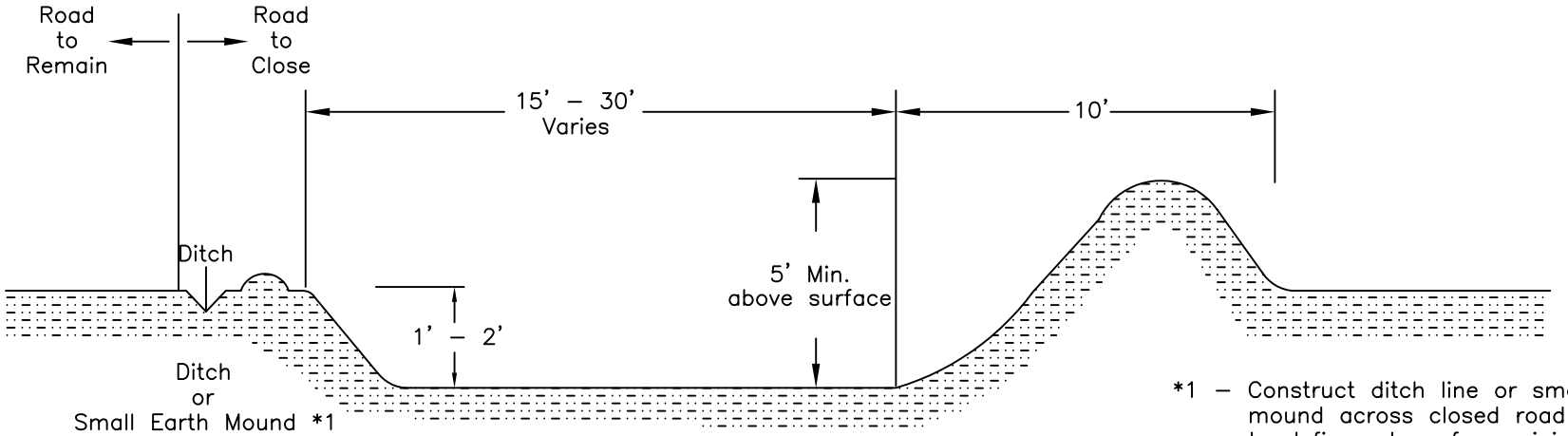

PROFILE VIEW

*1 – Construct ditch line or small earth mound across closed road entrance to define edge of remaining road.

*2 – Slope Excavation area to drain

6–15–05

T-803 - SNOW REMOVAL (05/07)

803.01 Description

This Section provides for removal of snow from roads to facilitate logging operations and safe use.

803.02 Maintenance Requirements

(1) Erect signs required by the Sign Plan in the SUPPLEMENTAL SPECIFICATIONS.

(2) Perform work in a manner to preserve and protect roads and appurtenances, and prevent erosion damage to roads, streams, and other Forest values.

(3) Do not undercut banks. Do not blade gravel or other surfacing material off the road.

(4) Keep roadbed drainage ditches, drain dips, and culverts functional when needed during operations and upon completion of operations.

(5) Control snow removal to identify the usable traveled way having roadbed support. Reshape over-width plowing as necessary to define the usable width.

(6) Space, construct, and maintain drainage holes in the dike of snow or berm caused by snow removal operations. Place drain holes to obtain surface drainage without discharging on erodible fills.

(7) Close roads to wheeled vehicles at times and in the manner specified in C(T)5.12 or the Road Rules document.

(8) Upon seasonal completion of Purchaser's Operations, effectively block the road by a snow barricade, unless otherwise approved by the Contracting Officer.

(9) Remove snow for either public access or project use as established in the SUPPLEMENTAL SPECIFICATIONS and meet the following requirements:

(a) Removal for Public Access (Method JU) - Remove snow from all of the traveled way, including turnouts, for safe and efficient use for both timber transportation and the public. Remove intruding windfalls, debris, or slough and slide material for the full width of the traveled way and deposit out of drainage’s at locations designated by the Contracting Officer.

(b) Removal for Project Use (Method TS) - Remove snow from all or part of the traveled way, including sufficient turnouts for safe and efficient use for timber transportation and to protect the road. Remove intruding windfalls, debris or slough and slide material and dispose of only as necessary to provide passage for timber transportation. Removed materials may be deposited off the traveled way or outside the traveled way at locations designated by the Contracting Officer.

(10) When directed by the Contracting Officer, replace in kind, within sixty (60) days after the start of Normal Operating Season, any surfacing material which has been bladed off the road, unless otherwise agreed. Contracting Officer will notify Purchaser in writing as to the cubic yard equivalent of bladed off material by the start of the normal operating season.

803.03 Equipment

Purchaser may use any type of equipment to remove snow, providing:

a. Type or use of equipment is not restricted in C(T)5.12 or Road Rules document.

b. Equipment is of the size and type commonly used to remove snow and will not cause damage to the road.

c. The use of plows or dozers to remove snow requires written approval by the Contracting Officer. Equip plows or dozers with shoes or runners to keep the dozer blade a minimum of 2 inches above the road surface unless otherwise approved by the Contractor Officer.

803.04 Ice Control

Ice control may be performed by Purchaser when approved by the Contracting Officer in writing. Such approval will include ice control materials, application rates, and any specific requirements of use.

T-811 BLADING (10/07)

811.01 Description

This work consists of surface blading the traveled way to a condition that facilitates traffic and provides proper drainage. Blading includes shaping the crown or slope of travel way, berms, and drainage dips in accordance with this specification. Compaction is required when shown on the ROAD LISTING.

811.02 Maintenance Requirements

A. Timing - Perform surface blading during the contract period as often as needed to provide conditions stated for the maintenance level of the road.

B. General

1. Blade and shape the existing traveled way and shoulders, including turnouts, to produce a surface which is uniform, consistent to grade, and crowned or cross-sloped as indicated by the character of the existing surface, unless otherwise shown in the ROAD LISTING, to at least ½ inch per 1 foot of width, but not more than ¾ inch per 1 foot of width. Thoroughly loosen surfacing material to no less than 2 inches depth or the depth of potholes or corrugations. Scarification to facilitate cutting to the full depth of potholes or corrugations may be elected, but will be considered incidental to blading. Do not scarify to a depth that will cause contamination of the surfacing.

2. Apply water during blading when sufficient moisture is not present to prevent segregation. Supply, haul, and apply water in accordance with Section T-891.

3. Shape existing native rock or aggregate surfaced drainage dips to divert surface runoff to existing outlet devices, ditches, or discharge locations.

4. Establish a blading pattern which provides a uniform driving surface, retains the surfacing on the roadbed, and provides a thorough mixing of the materials within the completed surface width. Upon final blading, no disturbed rock shall protrude more than 2 inches above the adjacent surface unless otherwise provided in the contract. Remove and place outside the roadbed, material not meeting this dimension so as not to obstruct drainage ways or structures. This material may be scattered off the roadbed if there is free drainage.

5. Where DESIGNATED ON THE GROUND, included in the ROAD LISTING, SHOWN ON THE DRAWINGS or as ordered by the Contracting Officer invasive species of concern prevention practices shall be followed as listed below.

Invasive Species of Concern Prevention Practices
N/A

C. Routine Blading

1. Conform to the dimensions SHOWN ON THE DRAWINGS or designated in the SUPPLEMENTAL SPECIFICATIONS upon completion of blading.

2. Shape roadbed width in excess of the dimensions shown only as needed to provide drainage away from the traveled way. Do not remove established grasses and other vegetation from the excess width except as incidental to providing drainage or unless otherwise provided in the contract.

D. Compaction

Roads requiring compaction will be included in the ROAD LISTING. Unless Compaction Method B is designated in the ROAD LISTING, all traveled ways requiring compaction may be compacted by Method A. Compaction shall commence immediately following blading.

Compaction methods are:

Compaction Method A: Breaking track while operating equipment on the traveled way.

Compaction Method B: 7-10 ton pneumatic, steel, or equivalent vibratory roller, operated to cover the full width two (2) times.

E. Undercutting - Undercutting roadway back slope is not permitted.

F. Intersections

1. At intersections, blade the roadbeds of side roads which are not closed or restricted from vehicular use to ensure smooth transitions.

2. Signing, cross ditching in the road surface (traveled way), earth berms, or other devices placed to discourage or eliminate use by passenger cars, are field evidence of road closure or restriction. Roads listed for work under Sections T-835, T-836, T-838, or T-839 are considered restricted.

3. Side roads listed for work under this Section are not restricted.

G. Cleaning of Structures - Do not allow materials resulting from work under this Section to remain on or in structures, such as bridges, culverts, cattle guards, or drainage dips.

H. Berms - Maintain existing berms to the condition of adjacent segments. Do not create new berms.

I. Smooth Blading - Smooth blading may be used as an interim measure to remove loose surfacing material from the wheel paths, and store removed materials in a recoverable windrow, until blade processing as described in this section is feasible. Watering will not be required for smooth blading. Accomplish smooth blading without distorting the existing cross-slope or crown of the traveled way.

Move and store loose surfacing materials on the high side of super-elevated curves and sections with uniform inslope or outslope. In crowned sections, store the material on either or both sides as elected. Windrow and place stored materials to provide not less than 12 feet of smooth traveled way on one-lane segments, or 20 feet of smooth traveled way on two-lane segments, or segments with turnouts. Cut holes through windrows, which may collect water on the road, for drainage at least every 500 feet.

T-813 SURFACING (10/07)

813.01 Description

This work consists of placing surface aggregate as DESIGNATED ON THE GROUND, or as ordered by the Contracting Officer. It includes preparing the area, furnishing, hauling, and placing all necessary materials and other work necessary to blend with the adjacent road cross section.

813.02 Materials

A. Materials will be Government-furnished when stated in the supplemental specifications.

1. Materials furnished by the Purchaser shall conform to the gradation and quality requirements of Section 703 of the "Standard Specifications for Construction of Roads and Bridges on Federal Highway Projects FP-03 U.S. Customary Units" and FS supplements to the FP-03.

2. All materials transported onto National Forest System land shall be free of invasive species of concern. Written documentation of methods used to determine the invasive species of concern free status of any and all materials furnished by the Purchaser shall be submitted to the Contracting Officer before transport of any materials onto National Forest System land.

   The Contracting Officer shall have 5 days, excluding weekends and Federal holidays, to review the methods and inspect the materials after the required written documentation is provided by the Purchaser. After satisfactory review and inspection or after such 5 day period, the Purchaser may transport the material onto National Forest System land.

   Material or methods appropriate for establishing invasive species of concern free status for the particular invasive species of concern are listed below.

   Invasive Species of Concern and Acceptable Methods specific to this project:

Invasive Species of Concern	**Acceptable Methods**
N/A	*N/A*

813.03 Maintenance Requirements

A. Thoroughly loosen the area to be surfaced to a minimum depth of 1 inch prior to placement of aggregate.

B. Mixing and Placing

When scheduled coincidentally with work under Section T-811, and included in the SUPPLEMENTAL SPECIFICATIONS, mix surfacing and existing aggregate with water until a uniform mixture is obtained prior to final shaping and compaction.

Otherwise, spread the material on the prepared area in layers no more than 4 inches in depth. When more than one (1) layer is required, shape and compact each layer before the succeeding layer is placed. Upon completion, the surfacing shall reasonably conform to the adjacent cross section and provide smooth transitions in the road profile.

C. Compaction Methods

Compaction Method A: Breaking track while operating equipment on the traveled way.

Compaction Method B: 7-10 ton pneumatic, steel, or equivalent vibratory roller, operated to cover the full width two (2) times.

Either Method A or B may be used unless Method B is designated in the ROAD LISTING.

T-831 DITCH MAINTENANCE (10/07)

831.01 Description

This Section provides for routine maintenance of various types of ditches to provide a waterway which is unobstructed, as shown on the ROAD LISTING or DESIGNATED ON THE GROUND.

831.02 Maintenance Requirements

A. Maintain ditches by removing rock, soil, wood, and other materials. Maintained ditches shall function to meet the intent of the original design.

B. Undercutting backslopes during removal operations is not permitted.

C. Suitable material up to 4 inches in greatest dimension removed from the ditches may be blended into existing native road surface and shoulder or placed in designated berm.

D. Do not blend material from ditch cleaning operations into aggregate surfaced roads. Do not blade material across aggregate or bituminous surfaced roads, unless approved in writing by the Contracting Officer.

E. Haul material in excess of 831.02 D or subject to 831.02 E to a designated waste area under Section T-832. Remove excess materials temporarily stored on the ditch slope or edge of the shoulder daily.

F. Remove limbs and wood chunks in excess of 12 inches in length or 3 inches in diameter from ditches and place outside the roadway.

G. Clean paved surfaces of all materials resulting from ditch maintenance work.

H. Shape lead-off ditches to drain away from the traveled way.

I. Where DESIGNATED ON THE GROUND, included in the ROAD LISTING, SHOWN ON THE DRAWINGS or as ordered by the Contracting Officer invasive species of concern prevention practices shall be followed as listed below.

Invasive Species of Concern Prevention Practices
N/A

T-834 DRAINAGE STRUCTURE MAINTENANCE (10/07)

834.01 Description

This work consists of cleaning and reconditioning culverts and other drainage structures.

834.02 Maintenance Requirements

A. Clean drainage structures, inlet structures, culverts, catch basins, and outlet channels specified in the SUPPLEMENTAL SPECIFICATIONS. Clean catch basins by removing the material within the area SHOWN ON THE DRAWINGS.

B. Clean the transition from the ditch line to the catch basin a distance of 10 feet from the catch basin. Clean outlet channels and lead-off ditches a distance of 6 feet. Remove and place debris and vegetation so as to not enter the channel or ditch, or obstruct traffic. Haul debris and vegetation to a designated disposal area in accordance with Section T-832.

C. Hydraulic flushing of drainage structures is not allowed unless provided for in the SUPPLEMENTAL SPECIFICATIONS.

D. Cleaning and reconditioning are limited to the first 3 feet of inlet and outlet, determined along the top of the structure. Recondition culvert inlet and outlet by field methods such as jacking out or cutting away damaged metal which obstructs flow. Treat cut edges with a zinc rich coating, in accordance with AASHTO M 36M and ASTM A 849.

E. Where DESIGNATED ON THE GROUND, included in the ROAD LISTING, SHOWN ON THE DRAWINGS or as ordered by the Contracting Officer invasive species of concern prevention practices shall be followed as listed below.

Invasive Species of Concern Prevention Practices
N/A

T-835 ROADWAY DRAINAGE MAINTENANCE (05/07)

835.01 Description

This work consists of providing post haul drainage on roads.

835.02 Maintenance Requirements

A. Drainage

1. Upon completion of work, shape the roadway to provide for the removal of surface water. The roadway need not be passable to vehicles. Repair and reinstall water bars, barriers or berms existing prior to the Purchaser's operation. Areas where water is ponded by existing centerline profile sags in through cuts may be left untreated.

2. Continuous blade shaping of the roadbed is not required under this specification.

3. Work to be done at staked locations shall be as indicated on the stake and/or stated in SUPPLEMENTAL SPECIFICATIONS:

4. Any of the following methods are acceptable for use at eroded or rutted locations:

Method A: Outsloping the roadbed at not less than ½ inch per yard of width.

Method B: Insloping the roadbed at not less than ½ inch per yard of width.

Method C: Water bar roadbed at locations staked on the ground and construct as SHOWN ON THE DRAWINGS or as included in SUPPLEMENTAL SPECIFICATIONS.

5. Drainage structures located in through fills and natural watercourses shall be fully functional without obstructions, including inlet and outlet channel within 20 feet of the structure.

6. Either clean culverts and other fabricated structures to provide drainage from road ditches and make the ditch functional or provide water bar(s) across the roadbed. Removed structures shall become Purchaser's property to be removed from National Forest System land. Remove and replace any purchaser-installed temporary drainage structures with a water bar.

B. Slides, Slumps and Slough

1. Slides and slough may be left in place, provided they do not potentially impound water or divert water from watercourses. As necessary, reshape the various surfaces to provide drainage.

2. Provide drainage to effectively decrease or eliminate the entry of surface water into slides, slumps, and roadbed surface cracks. Place berms, waterbars or ditches as needed to intercept and remove runoff water from the roadbed. Surface seal cracks by covering over with native soil materials to prevent additional water entry and compact with equipment tires.

C. Entrance Devices

Upon completion of work, replace entrance devices to effectively eliminate access by motorized vehicles having four (4) wheels and a width in excess of 50 inches.

D. Seeding

Seed and fertilize all disturbed areas in accordance with requirements set forth in Section T-841.

T-838 MAINTENANCE FOR HIGH CLEARANCE VEHICLE USE (05/07)

838.01 Description

This work consists of making limited use roads passable for project use by Purchaser and providing drainage from the traveled way and roadbed.

838.02 Maintenance Requirements

A. Traveled Way

Purchaser may smooth or fill existing cross ditches and water bars and as approved by the Contracting Officer modify existing road junctions to enable vehicle access. The Purchaser may perform the following work prior to beginning haul and resumption of haul after an extended stoppage:

1. Remove brush, fallen trees, rocks, and other debris from traveled way, including turnouts, turnarounds, and other locations that interfere with needed maintenance as follows:

a. No object extending over 4 inches above the road surface shall remain within the 12 feet usable traveled way. Center the usable width on the roadbed or position away from the fill slope.

b. Cut and remove standing or down trees, logs, brush, and limbs from within the area described in 1(a). Remove encroaching limbs to a height of 14 feet above the traveled way surface. Scatter material not meeting utilization standards outside and below the roadbed on the fill side. Limb and remove timber that meets utilization standards or deck at locations approved by the Contracting Officer.

c. Place all removed materials away from drainages.

d. During use, maintain drainage structures including dips, ditches and culverts in a usable condition.

2. Clean and recondition drainage facilities in accordance with Section T-831 and T-834.

B. Slough and Slides

1. Slough and slides may be left in place, provided surface drainage is provided and at least 12 feet of width is available for vehicle passage.

2. Purchaser may reposition or ramp over slides and slough when the traveled way width is less than 12 feet providing the material is capable of supporting vehicles. Limit out slope to no more than six percent.

3. Reposition slough or slide materials, which are not capable of supporting a vehicle, on the roadbed to provide the 12 feet width. When directed by the Contracting Officer, slough or slide material will be removed under Section T-832.

C. Slumps and Washouts

1. Drain the roadbed immediately upgrade of slumps and longitudinal cracks to prevent water from entering slump area.

2. Slumps and longitudinal cracks at the edge of the roadbed shall not be considered a part of the usable width. Usable width may be reduced to 10 feet in the area of the slump.

3. Unless the Contracting Officer approves material being placed on slumps, ramp the slumps on both ends into undisturbed roadbed to provide at least 10 feet usable width. Use removed materials to guide vehicles to the ramp location or to aid in draining the area.

4. Washouts may be filled with suitable material.

D. Post haul

At the end of hauling or prior to entering into seasonal shutdowns or a period of extended inactivity:

1. Shape the traveled way and disturbed roadbed to provide functional drainage.

2. Reinstall removed cross ditches and water bars and provide any additional drainage structures necessary to offset changes caused through use and maintenance.

3. Leave roads useable for high clearance vehicles. Remove or reshape purchaser modifications at road junctions to leave the entrance as it was before use, or as agreed at the time of improvement.

T-839 MAINTENANCE FOR PROJECT USE (05/07)

839.01 Description

Work consists of providing minimum access required for Purchaser's Operations and associated Forest Service contract administration and preventing unacceptable resource or road damage.

839.02 Maintenance Requirements

A. Purchaser is authorized to perform the following maintenance to provide vehicle passage and drainage:

1. Removing log, earth, and rock barriers and/or improving existing road junctions to enable vehicle access as mutually agreed.

2. Smoothing or filling existing cross ditches and water bars.

3. Installing Purchaser-furnished culverts or other temporary drainage structures for shallow stream crossings as approved by the Contracting Officer.

4. Removing brush, fallen trees, rocks, and other materials from the traveled way and other locations that interfere with needed maintenance:

   a. Place all removed materials away from drainages.

   b. Limb and remove timber which meets utilization standards or deck at locations approved by the Contracting Officer. Scatter other woody materials, including limbs, off of and below the roadbed without creating concentrations.

5. Clean and recondition drainage structures in accordance with Section T-831 and Section T-834.

6. Reposition or ramp over slough and slides to provide adequate width of traveled way material.

7. Provide traveled way drainage above slumps and seal cracks in slump area. Ramp the slumps on both ends into undisturbed roadbed to provide usable width unless otherwise ordered by the Contracting Officer.

B. During use, the traveled way shall not channel water along the road. Prior to seasonal periods of anticipated rains and runoff, perform the following work:

1. Shape the traveled way and roadbed to drain.

2. Reinstall removed cross ditches and water bars and provide any additional drainage structures necessary to offset changes through use and maintenance.

3. Perform work outlined in 839.02 A (5), (6), and (7).

4. During periods of non use, replace original barrier or provide and maintain standard MUTCD, Type 3, barricades unless alternate type barriers are approved by the Contracting Officer.

839.03 Post Haul Requirements

A. Upon completion of project use perform such work as needed to reasonably conform to the character of the existing road prior to Purchaser's maintenance for project use, unless otherwise provided in the SUPPLEMENTAL SPECIFICATIONS or the Road Listing. Work shall be in addition to requirements of 839.02 B and in accordance with 839.03 B and C.

B. Roads designated in the Road Listing to be blocked shall conform to the requirements of Section T-835. Unless otherwise approved by the Contracting Officer, remove Purchaser-installed temporary structures from National Forest System land. Associated commercially-obtained materials shall remain the property of the Purchaser.

C. Remove or reshape Purchaser improvements at road junctions, as approved by the Contracting Officer at the time of improvement.

T-842 CUTTING ROADWAY VEGETATION (10/07)

842.01 Description

This work consists of cutting all vegetative growth, including trees and other vegetation less than 4 inches in diameter measured 6 inches above the ground, on roadway surfaces and roadsides.

842.02 Maintenance Requirements

A. General

1. Cut brush, trees, and other vegetation within each area treated to a maximum height of 6 inches above the ground surface or obstruction such as rocks or existing stumps. When work is performed under this Section, remove all limbs which extend into the treated area, or over the roadbed, to a height of 14 feet above the traveled way surface elevation.

2. Items to remain will be DESIGNATED ON THE GROUND.

3. Work may be performed either by hand or mechanically unless specifically shown in the Road Listing. Self-propelled equipment is not allowed on cut and fill slopes or in ditches.

4. Correct damage to trunks of standing trees caused by Purchaser's operation either by treatment with a commercial nursery sealer or by removing the tree as directed by the Contracting Officer.

5. Limb trees within the cutting limits which are over 4 inches -measured at 6 inches above the ground in lieu of cutting.

6. When trees are limbed, cut limbs within 4 inches of the trunk.

B. Cutting Side Vegetation

1. Show the width of vegetation to be removed in the Road Listing.

2. Unless otherwise included in the SUPPLEMENTAL SPECIFICATIONS or DESIGNATED ON THE GROUND:

a. Commence work at the edge of the traveled way and proceed away from the road centerline.

b. Roads without a defined traveled way: The starting point for cutting will be marked on the ground or defined in the SUPPLEMENTAL SPECIFICATIONS.

3. The points for establishing cutting limits are as follows:

a. Fill and daylighted (wide roadbed) section cutting commences at the edge of the traveled way and proceeds away from the road center line.

b. Drainage ditched section cutting commences at the bottom of the existing ditch and proceeds away from the road center line. Cutting on ditch foreslopes is not required.

c. Unditched cut section cutting commences at the intersection of the cutbank and the roadbed and proceeds away from center line.

4. Provide transitions between differing increments of cutting width. Accomplish transitions in a taper length of not less than 50 feet not more than 70 feet.

C. Debris

1. Materials resulting from the cutting operation in excess of 12 inches in length or 3 inches in diameter is not allowed to remain on roadway slopes within the treated area, in ditches, or within water courses.

2. Remove limbs and chunks in excess of 3 inches in any dimension from the traveled way and shoulders.

3. Materials may be scattered down slope from the roadbed, outside of the work area and drainages unless otherwise listed in D. Invasive Species of Concern.

D. Invasive Species of Concern

Where DESIGNATED ON THE GROUND, included in the ROAD LISTING, SHOWN ON THE DRAWINGS or as ordered by the Contracting Officer invasive species of concern prevention practices shall be followed as listed below.

Invasive Species of Concern Prevention Practices
N/A

U.S. DEPARTMENT OF AGRICULTURE FOREST SERVICE **TIMBER SALE CONTRACT** (Applicable to Sales to be Scaled after Felling)		**Name of Purchaser**	
National Forest Olympic	**Ranger District** Soleduck	**Region** Pacific N-West	**Contract Number**
Sale Name Hy Wah		**Award Date**	**Termination Date** 10/31/2018

The parties to this contract are The United States of America, acting through the Forest Service, United States Department of Agriculture, hereinafter called Forest Service, and _____ hereinafter called Purchaser.

Forest Service having advertised a sale at which either (1) Purchaser, whose required bid deposit is now held by Forest Service as an initial deposit, was the successful bidder, or (2) no bids were received and Purchaser having subsequently offered at least the minimum advertised price and made an initial deposit in the same amount as the bid deposit specified in the sale advertisement; and the parties hereto desiring to record their agreement; now therefore,

Unless provided otherwise herein, Forest Service agrees to sell and permit Purchaser to cut and remove Included Timber and Purchaser agrees to purchase, cut, and remove Included Timber.

This contract consists of three Divisions: A - Specific Conditions, B - Standard Provisions, and C - Special Provisions, together with Sale Area Map, Plans and specifications for developments (if any), and such attachments as may be provided for in Division C. Specific Conditions are numbered and apply to the Part, Section, Subsection, or Item of the Standard Provisions, as indicated hereunder. Other conditions of this contract are stated in Division C - Special Provisions.

IN WITNESS WHEREOF, the parties hereto have executed this contract as of the award date.

UNITED STATES OF AMERICA

Two Witnesses: 1/

By: _____
Contracting Officer

_____
(Name)

_____
(Title)

_____
(Address)

_____
(Purchaser) 2/

_____
(Name)

By: _____

_____
(Address)

_____
(Title)

_____
(Business Address)

I,3/ _____ , certify that I am the _____
Secretary of the corporation named as Purchaser herein; that _____
who signed this contract on behalf of Purchaser, was then _____
of the corporation; that the contract was duly signed for and in behalf of the corporation by authority of its governing body, and is within the scope of its corporate powers.

_____

CORPORATE SEAL 4/

INSTRUCTIONS:

1/ The signatures and addresses of two witnesses are required if Purchaser is other than a corporation.

2/ If Purchaser is a co-partnership, the signatures should be: XYZ Company, by John Doe, a member of the firm. If Purchaser is a corporation, form of signature should be: XYZ Company, by John Doe, President (or other officer or agent) and the seal of the corporation must be impressed or indicated.

3/ The certificate must be completed if Purchaser is a corporation.

4/ If the corporation has no corporate seal that fact shall be stated, in which case a scroll or adhesive seal shall follow the corporate name.

EXAMPLE 1/

Subcontractor Certification
Regarding Debarment, Suspension, Ineligibility, and Voluntary Exclusion

Timber Sale Name: _____
National Forest: _____

The prospective subcontractor (participants in lower tier covered transactions) certifies, by submission of this proposal, that neither it nor its principals is presently debarred, suspended, proposed for debarment, declared ineligible, or voluntarily excluded from participation in this timber sale by any Federal department or agency.

Where the prospective subcontractor is unable to certify to any of the statements in this certification, such prospective subcontractor shall attach an explanation to this proposal.

Name of Subcontractor: _____
Business Address: _____
_____

_____ _____
Date Signature

1/ It is the Purchaser's responsibility to have subcontractors complete this certification and to maintain a file of completed certifications. This certification does not need to be returned to the Forest Service, except at the written request of the Contracting Officer.

The following conditions apply to the indicated portions of Division B - Standard Provisions issued June 2006.

A1 - Location and Area, applicable to B1.1

This Sale Area of 802 acres more or less is located in:

T28N, R11W, Sections 8, 9, 10; T28N, R12W, Sections 4, 5, 6

A2 - Volume Estimate and Utilization Standards, applicable to B2.1, B2.2, B2.4, and B6.4

Species	Product	Estimated Quantity	Unit of Measure	Minimum Specifications				
				Merchantable Tree		Piece Required to be Removed		
				Diameter Breast High (d.b.h.) (inches)	Number of Minimum Pieces per Tree	Length (feet)	Diameter Inside Bark at Small End (inches)	Net Scale in % of Gross Scale
Douglas-fir	Sawtimber	12,761.00	Ton	8.0	1	12	6.0	40
Western Hemlock and other species	Sawtimber	19,390.00	Ton	8.0	1	12	6.0	40
Red Alder	Sawtimber	575.00	Ton	8.0	1	12	6.0	40
Total Quantity		32,726.00	Ton					

A3- Timber Designations, applicable to B2.3; acres are approximate:

	Number	Acres
Clearcutting Units (B2.31)		
Specified Road Clearing (B2.32)		
Overstory Removal Units (B2.33)		
Understory Removal Units (B2.34)		
Individual Trees (B2.35)		219
Incompletely Marked Timber (B2.36)		

A4 - Timber Payment Rates, applicable to B3.1 and B4.0

A4a - For Species and Products to be Paid for at Rates Escalated under B3.2

Not Applicable

A4b - For Species and Products to be Paid for at Flat Rates

Species	Product	Unit of Measure	Rates per Unit of Measure				
			Base $	Advertised $	Bid Premium $	Bid (Flat) $	Required Deposits Slash Disposal $
Douglas-fir	Sawtimber	Ton	.95	5.97			1.31
Western Hemlock and other species	Sawtimber	Ton	.95	5.97			1.31
Red Alder	Sawtimber	Ton	.95	5.97			1.31

For purposes of convenience in collection and bookkeeping, Bid Rates stated in A4 include payment of deposits for sale area betterment required pursuant to 16 USC 576b. Such deposits are not included as Required Deposits defined hereunder.

The following definitions are established for the terms used in A4:

Base Rates are the lowest rates of payment for timber that are authorized by this contract. Base Rates remain constant throughout the life of this contract and are not subject to change by rate redetermination, except for reduction under B3.31, B3.32, or B3.33.

Advertised Rates are the minimum acceptable Bid Rates for timber, exclusive of Required Deposits. These rates are those indicated by appraisal, with a cost allowance made for construction of Specified Roads listed in A7, but are never less than Base Rates.

Bid Premium Rates are the amounts by which Purchaser's bid is in excess of Advertised Rates. The Bid Premium Rates are constant during this contract, except as provided in B3.31, B3.32, and B3.33.

Bid Rates are the rates bid by Purchaser (exclusive of Required Deposits for slash disposal, road maintenance, and contract scaling) and are the sum of Advertised Rates and Bid Premium Rates. Until a rate redetermination becomes effective, the Bid Rate for species and products in A4a is the Tentative Rate that is subject to quarterly adjustment under B3.2; for species and products in A4b, the Bid Rate is the Flat Rate.

Required Deposits are deposits that Purchaser may be required to pay for slash disposal (16 USC 490), road maintenance (16 USC 537), and contract scaling (1994 Appropriations Act). Required Deposits may be adjusted as part of a rate redetermination or a Contract Term Extension. The table shows only Required Deposits for slash disposal; road maintenance deposits, if any, are given in C5.32#; and contract scaling deposits, if any, are given in C6.816#.

Base Index is the specified average of the lumber or other product selling value index used as the basis for computing adjustment in rates for variance in product selling value, as provided in B3.2.

A5 - Indices Used in Quarterly Adjustment, applicable to B3.2

Not Applicable

A6 - High Stumps, applicable to B6.412

Species	Product	Maximum Stump Height (inches)
All	All	12

A7 - Specified Roads, applicable to B5.2

Name and Date of Governing Road Specifications: Federal Highway Administration Standard Specifications for Construction of Roads and Bridges on Federal Highway Projects(2003)-english

Project		Design Class	Appro. Length (mi./km.)	Sheet Numbers and Approval Date	Performance Responsibility		
Road No.	Name				Survey	Design	Construction Staking 1/
2900015_1	D Road (C) (segment 0 to 1.55)	Single Lane - 10 mph	1.55 / 2.49	1-25 08/26/2013	FS	FS	Purchaser BC

1/ Indicate timing, i.e., before clearing (BC) or after clearing (AC). Applicable to B5.212.

A8 - Forest Service Engineering Completion Schedule, applicable to B5.21

Road No.	Road Name	Type of Work	Completion Date
2900015_1	D Road (C) (segment 0 to 1.55)	Survey and Design	08/15/2013

A9 - Scaling Instructions and Specifications, applicable to B6.8

Name and Date of Governing Instructions: FSH 2409.11a National Cubic Scaling Handbook, as amended and supplemented. Fiber scaling rules apply to non-sawtimber products. Check scaling will be performed at individual scaling locations.

Scaling Specifications					
Species	Product	Maximum Scaling Length (feet)	Trim Allowance		
			Diameter Range (inches)	Length Range (feet)	Trim Allowance (inches)
All	*Sawtimber*	*0*	*ALL*	*ALL*	*0*

A10 - Scaling Services, applicable to B6.81

Species	Product	Unit of Measure	Site and Geographic Location	Method	Standard Estimated Cost per Unit $
All	Sawtimber	Ton	Purchaser shall request an alternative scaling site per B6.811 and B6.814	Total (100%) Weight Scale	.00

A11 - Minimum Scaling Volumes, applicable to B6.81

Minimum volume for Continuous Scaling Services in two-week period N/A Ton per scaler

Minimum volume for Intermittent Scaling Services N/A Ton on a N/A basis

A12 - Fire Precautionary Period, applicable to B7.2

April 15 to October 15 , inclusive

A13 - Purchaser Responsibility to Furnish Crews and Equipment for:

Initial Fire Supression, applicable to B7.3

Within 5 road miles

Fire Suppression Reinforcement, applicable to B7.312 and B 7.313

Within 100 road miles

A14 - Purchaser's Obligation per Operations Fire, applicable to B7.41

Maximum Amount: $ $300,000.00

A15 - Termination Date, applicable to B8.2

October 31, 2018

A16 - Normal Operating Season, applicable to B6.31, B6.66, B8.21 and B9.3

First Period: June 01 to February 28 , inclusive

Second Period: _____ to _____ , inclusive

A17 - Performance Bond Amount, applicable to B9.1

_____

A18 - Downpayment, applicable to B4.211

Downpayment Amount: _____

A19 - Periodic Payment Amount, applicable to B4.213

	Periodic Payment Determination Date	Amount
Initial Payment:	May 01, 2017	_____
Additional Payment:	October 15, 2017	_____

A20 - Market-Related Contract Term Addition Producer Price Index, applicable to B8.212

Index Name: Softwood Lumber **Index Number:** 0811

A21 - Inapplicable Standard Provisions

The following listed Sections, Subsections, or Items of Division B-Standard Provisions - are hereby made inapplicable. (Instructions: List by reference number and title.)

B4.211	DOWNPAYMENT
B4.4	PAYMENTS NOT RECEIVED
B8.212	MARKET-RELATED CONTRACT TERM ADDITION

A22 - List of Special Provisions

The following listed special provisions are attached to and made a part of this contract as Division C. Provisions with reference numbers followed by # contain blanks into which data have been entered for this sale. (Instructions: List by reference number, title, and date.)

C2.35# (OPTION 1)	INDIVIDUAL TREE DESIGNATION (06/2008)
C3.47#	ABNORMAL DELAY (09/2004)
C4.211	DOWNPAYMENT (06/2007)
C4.212	TEMPORARY REDUCTION OF DOWNPAYMENT (08/2009)
C4.4	PAYMENTS NOT RECEIVED (08/2012)
C5.1# (OPTION 1)	TEMPORARY ROAD AND LANDING CONSTRUCTION (06/2008)
C5.12#	USE OF ROADS BY PURCHASER (06/1999)
C5.13#	ROAD COMPLETION DATE (04/2004)
C5.213#	DEPOSIT FOR RECONSTRUCTION ENGINEERING SERVICES (04/2004)
C5.221#	MATERIAL SOURCES (04/2004)
C5.31#	ROAD MAINTENANCE REQUIREMENTS (07/2001)
C5.32#	ROAD MAINTENANCE DEPOSIT SCHEDULE (07/2001)
C6.315#	SALE OPERATION SCHEDULE (06/1994)
C6.405	ALTERNATE REMOVAL OF INCLUDED TIMBER (05/2005)
C6.41#	SPECIFIC REQUIREMENTS (01/2000)
C6.42#	YARDING/SKIDDING REQUIREMENTS (04/2003)
C6.422	CONSTRUCTED LANDINGS (07/2001)
C6.6#	EROSION CONTROL AND SOIL TREATMENT BY PURCHASER (07/2001)
C6.7	SLASH DISPOSAL (06/2008)
C6.74#	SLASH TREATMENT REQUIREMENTS (02/2002)
C6.815	THIRD PARTY SCALING SERVICES (04/2004)
C6.84 (OPTION 1)	USE OF PAINT BY PURCHASER (05/2005)
C7.1	PLANS (09/2004)
C7.2	SPECIFIC FIRE PRECAUTIONS (09/2002)
C7.201	BURNING BY PURCHASER (01/1993)
C7.22	EMERGENCY FIRE PRECAUTIONS (09/2004)
C8.13	DISCLAIMER OF EXPRESSED OR IMPLIED WARRANTY (09/2004)
C8.212	MARKET-RELATED CONTRACT TERM ADDITION (11/2008)
C8.3# (OPTION 1)	CONTRACT CHANGES (06/2004)
C8.66# (Option 1)	USE OF TIMBER (04/2004)

UNITED STATES DEPARTMENT OF AGRICULTURE
Forest Service

TIMBER SALE CONTRACT
DIVISION B

June 2006
(Date of Issue)

STANDARD PROVISIONS FOR SCALED TIMBER SALES

(Applicable to Timber Sales to be Scaled after Felling)

This Division is organized into Parts, Sections, Subsections, and Items. These are numbered in accordance with the following scheme: Part B1.0, Section B1.1, Subsection B1.11, and Item B1.111. References to a Part include all Sections, Subsections, and Items within that Part; references to a Section include all Subsections and Items within that Section; and references to a Subsection include all Items within that Subsection. Cross-references within this contract cite the reference number of the applicable Division, Part, Section, Subsection, and Item. Descriptive headings used are not to be considered in determining the rights and obligations of the parties.

The Standard Provisions in this Division are subject to Specific Conditions of the contract stated in Division A. Wherever appropriate, Specific Conditions established in Division A are cited by reference number. The listing of Sections, Subsections, or Items of this Division in A21 has the effect of striking or deleting them from Division B. A22 lists Special Provisions that comprise Division C. Where appropriate, references to Special Provisions are made by citing the applicable reference numbers.

INDEX TO TERMS

Term	Reference	Term	Reference
Advertised Rates	A4	Normal Operating Season	B6.31
Base Index	A4	Off-Road Equipment	B6.35
Base Rates	A4	Operations Fire	B7.41
Bid Premium Rates	A4	Out-of-Pocket Expenses	B8.35
Bid Rates	A4	Overstory Removal Units	B2.3
Catastrophic Damage	B2.133	Plans	B5.211
Claim	B9.2	Purchaser's Operations	B6.3
Clearcutting Units	B2.3	Required Deposits	A4
Continuous Scaling Services	B6.81	Sale Area	B1.1
Contract Term Adjustment	B8.21	Sale Area Map	B1.1
Contract Term Extension	B8.23	Scaling	B6.8
Current Contract Rates	B3.1	Schedule of Items	B5.2
Current Contract Value	B3.1	Shop Drawings	B5.211
Current Unit Rates	B5.251	Specified Roads	B5.2
Design Change	B5.253	Streamcourses	B6.5
Extended Scaling Services	B6.81	Subcontractor	B8.64
Extension Deposit	B4.217	Substantially Completed	B5.23
Fire Precautionary Period	B7.2	Temporary Roads	B5.1
Flat Rates	A4	Tentative Rate	A4
Included Timber	B2.1	Termination Date	B8.2
Indicated Advertised Rates	B8.221	Timber Sale Account	B4.2
Intermittent Scaling Services	B6.81	Understory Removal Units	B2.3
Marked	B2.35	Unrecovered Expenditures	B8.35
Negligent Fire	B7.42	Utilization Standards	A2, B2.2

CONTENTS

Reference Number	Title	Page
B1.0	**SALE AREA**	**113**
B1.1	Sale Area Map	113
B1.2	Claims	113
B2.0	**TIMBER SPECIFICATIONS**	**113**
B2.1	Included Timber	113
B2.11	Standard Timber	113
B2.12	Substandard Timber	113
B2.13	Damaged Timber	113
B2.131	Damaged by Purchaser	113
B2.132	Negligent or Willful Damage	113
B2.133	Damaged by Catastrophe	113
B2.134	Minor Damage by Natural Causes	113
B2.14	Unintentionally Cut Timber	113
B2.15	Construction Timber	114
B2.16	Other Material	114
B2.2	Utilization and Removal of Included Timber	114
B2.3	Timber Designations	114
B2.31	Clearcutting Units	114
B2.32	Construction Clearing	114
B2.33	Overstory Removal Units	114
B2.34	Understory Removal Units	114
B2.35	Individual Trees	114
B2.36	Incompletely Marked Timber	114
B2.37	Minor Changes	114
B2.4	Volume Estimate	114
B2.41	Adjustment for Volume Deficit	114
B2.42	Adjustment for Excess Volume	114
B3.0	**RATES OF PAYMENT**	**115**
B3.1	Current Contract Rates	115
B3.2	Escalation Procedure	115
B3.21	Unavailable Index	115
B3.3	Rate Redetermination	115
B3.31	Rate Redetermination for Environmental Modification	115
B3.32	Rate Redetermination after Catastrophic Damage	115
B3.33	Rate Redetermination for Market Change	116
B3.34	Emergency Rate Redetermination	116
B3.4	Other Payment Rates	116
B3.41	Material Not in A2	116
B3.42	Timber Cut Through Mistake	116
B3.43	Designated Timber Cut But Not Removed	116
B3.44	Undesignated Timber Damaged Without Negligence	116
B3.45	Undesignated Timber Unnecessarily Damaged or Negligently or Willfully Cut	116
B3.46	Liquidated Damages	116
B3.47	Defect Caused by Abnormal Delay	116
B4.0	**PAYMENTS**	**117**
B4.1	Amount Payable for Timber	117
B4.2	Timber Sale Account	117
B4.21	Cash Deposits	117
B4.211	Downpayment	117
B4.212	Advance Deposits	117
B4.213	Periodic Payment Schedule	117
B4.214	Deposits for Charges Subject to Escalation	117
B4.215	Deposits When Payment Guaranteed	117
B4.216	Blanket Cash Deposits	117
B4.217	Extension Deposits	117
B4.218	Cooperative Deposits	118
B4.22	Temporary Reduction of Downpayment	118
B4.23	Refund of Excess Cash	118
B4.24	Refund after Scaling Completed	118
B4.3	Payment Guaranteed by Bond or Deposited Securities	118
B4.31	Blanket Bond	118
B4.32	Letters of Credit for Payment Bond	118
B4.4	Payments Not Received	118
B5.0	**TRANSPORTATION FACILITIES**	**119**
B5.1	Authorization	119
B5.11	Requirements of Rights-of-Way	119
B5.12	Use of Roads by Purchaser	119
B5.2	Specified Roads	119
B5.21	Engineering	120
B5.211	Contract Plans	120
B5.212	Construction Staking	120
B5.22	Material Delivery	121
B5.23	Use of Partially Constructed Roads	121
B5.24	Estimated Cost	121
B5.25	Construction Cost Adjustment	121
B5.251	Variation in Quantities	121
B5.252	Physical Change	121
B5.253	Design Change	122
B5.26	Alternate Facilities	122
B5.27	Temporary Credit for Unamortized Specified Road Construction Cost	123
B5.3	Road Maintenance	123
B5.4	Use by Others	123
B6.0	**OPERATIONS**	**123**
B6.1	Representatives	123
B6.11	Notices	124
B6.2	Improvements	124
B6.21	Removal	124
B6.22	Protection of Improvements	124
B6.221	Protection of Improvements Not Owned by Forest Service	124
B6.222	Protection of Property	124
B6.23	Protection of Land Survey Monuments	124
B6.24	Protection Measures Needed for Plants, Animals, Cultural Resources, and Cave Resources	125
B6.3	Control of Operations	125
B6.31	Operating Schedule	125
B6.311	Plan of Operations	125

Reference Number	Title	Page
B6.312	Plan of Operations for Road Construction	125
B6.32	Protection of Residual Trees	126
B6.33	Safety	126
B6.34	Sanitation and Servicing	126
B6.341	Prevention of Oil Spills	126
B6.342	Hazardous Substances	126
B6.35	Equipment Cleaning	126
B6.36	Acceptance of Work	127
B6.361	Acceptance of Specified Roads	127
B6.4	Conduct of Logging	127
B6.41	Felling and Bucking	127
B6.411	Felling in Clearings	128
B6.412	Stump Heights	128
B6.413	Bucking Lengths	128
B6.414	Limbing	128
B6.42	Skidding and Yarding	128
B6.421	Rigging	128
B6.422	Landings and Skid Trails	128
B6.423	Skidding on Roads	128
B6.424	Arches and Dozer Blades	128
B6.5	Streamcourse Protection	128
B6.6	Erosion Prevention and Control	128
B6.61	Meadow Protection	128
B6.62	Wetlands Protection	129
B6.63	Temporary Roads	129
B6.631	Temporary Roads to Remain Open	129
B6.64	Landings	129
B6.65	Skid Trails and Fire Lines	129
B6.66	Current Operating Areas	129
B6.67	Erosion Control Structure Maintenance	129
B6.7	Slash Disposal	129
B6.8	Scaling	129
B6.81	Scaling Services	129
B6.811	Scaling Location	129
B6.812	Scaling Adjustments	130
B6.813	Delayed or Interrupted Scaling Services	130
B6.814	Weighing Services	130
B6.82	Presentation for Scaling	130
B6.83	Scaling Other Products	130
B6.84	Accountability	131
B6.841	Route of Haul	131
B6.842	Product Identification	131
B6.85	Scaling Lost Products	131
B6.851	Scaling Lost Sample Loads	131
B6.86	Scale Reports	132
B6.9	Records	132
B7.0	**FIRE PRECAUTIONS AND CONTROL**	**132**
B7.1	Plans	132
B7.2	Fire Precautions	132
B7.21	Substitute Precautions	132
B7.22	Emergency Precautions	132
B7.3	Fire Control	132
B7.31	Purchaser's Reinforcement Obligations	132
B7.311	Suspend Operations	132
B7.312	Personnel	132
B7.313	Equipment	132
B7.4	Fire Suppression Costs	132
B7.41	Operations Fire	132
B7.42	Negligent Fire	132
B7.43	Other Fires on Sale Area	133
B7.5	State Law	133
B7.6	Performance by Contractor	133
B8.0	**OTHER CONDITIONS**	**133**
B8.1	Title and Liability	133
B8.11	Title Passage	133
B8.12	Liability for Loss	133
B8.2	Period of Contract	133
B8.21	Contract Term Adjustment	133
B8.211	Delay in Reconstruction of Processing Facilities	134
B8.212	Market-Related Contract Term Addition	134
B8.22	Termination for Catastrophe	134
B8.221	Termination by Purchaser	134
B8.222	Termination by Forest Service	134
B8.23	Contract Term Extension	134
B8.231	Conditions for Contract Term Extension	134
B8.3	Contract Modification	135
B8.31	Changed Conditions	135
B8.32	Modification for Catastrophe	135
B8.33	Contract Suspension and Modification	135
B8.34	Contract Termination	135
B8.341	Termination by Forest Service	136
B8.342	Termination by Purchaser	136
B8.35	Out-of-Pocket Expenses	137
B8.36	Termination for Market Change	137
B8.4	Performance by Other than Purchaser	137
B8.5	Sale of Other Materials	138
B8.6	Provisions Required by Statute	138
B8.61	Covenant against Contingent Fees	138
B8.62	Officials Not to Benefit	138
B8.63	Nondiscrimination in Employment	138
B8.64	Debarment and Suspension Certification	138
B8.65	Contract Consistency With Other Laws	139
B9.0	**PERFORMANCE AND SETTLEMENT**	**139**
B9.1	Performance Bond	139
B9.11	Bond Reduction	139
B9.12	Letters of Credit	139
B9.13	Temporary Bond Reduction	139
B9.2	Disputes	139
B9.21	Time Limits for Submission of Claim	140
B9.22	Contract Documents	140
B9.3	Breach	140
B9.31	Termination for Breach	140
B9.4	Damages for Failure to Cut or Termination for Breach	141
B9.5	Settlement	141
B9.6	Contract Closure	141

B1.0—SALE AREA

B1.1 Sale Area Map. The boundaries of "Sale Area" and any subdivision thereof, are as shown on the attached "Sale Area Map" that is made a part hereof, and were, before timber sale advertisement, designated on the ground by Forest Service to meet the anticipated needs of the parties. The location of Sale Area and its approximate acreage are stated in A1. Subdivisions may be revised and additional ones may be established only by written agreement. Subdivisions or cutting units may be eliminated from Sale Area under conditions described in B6.36. Catastrophically Damaged areas may be removed from Sale Area under B8.32.

Where applicable, the following are also identified on Sale Area Map:

(a) Identified claims limiting Purchaser's rights under B1.2;

(b) Subdivisions defined in B2.3 where timber is to be Marked after date of timber sale advertisement;

(c) Boundaries of Clearcutting Units, Overstory Removal Units, and Understory Removal Units under B2.3;

(d) Diameter limits for Overstory Removal Units and Understory Removal Units under B2.33 and B2.34;

(e) Areas where leave trees are Marked to be left uncut under B2.35;

(f) Specified Roads listed in A7;

(g) Sources of base course, surface rock, and rock riprap listed in the Schedule of Items under C5.221;

(h) Roads where log hauling or use is prohibited or restricted under B5.12;

(i) Roads and trails to be kept open under B6.22;

(j) Improvements to be protected under B6.22;

(k) Locations of known wildlife or plant habitat and cave resources to be protected under B6.24;

(l) Locations of areas known to be infested with specific invasive species of concern under B6.35;

(m) Maximum stump heights when more than one height is listed by areas in A6 under B6.412;

(n) Skidding or yarding methods specified under B6.42;

(o) Streamcourses to be protected under B6.5;

(p) Locations of meadows requiring protection under B6.61;

(q) Locations of wetlands requiring protection under B6.62;

(r) Locations of temporary roads to be kept open under B6.631; and

(s) Other features required by Division B or C.

B1.2 Claims. Valid claims are excluded from Sale Area, except those on which timber cutting is authorized in writing by the claimant and except mining claims on which cutting is authorized by the Act of July 23, 1955 (30 USC 614). Claims that limit Purchaser's rights to operate under this contract and that Forest Service has been able to identify are shown on Sale Area Map. Purchaser is not obligated to operate contrary to existing claim limitations. Forest Service shall designate boundaries of claims on the ground to the extent necessary to identify Included Timber.

B2.0—TIMBER SPECIFICATIONS

B2.1 Included Timber. "Included Timber" consists of:

B2.11 Standard Timber. Live and dead trees and portions thereof that meet Utilization Standards under B2.2 and are designated for cutting under B2.3.

B2.12 Substandard Timber. Live and dead trees that:

(a) Do not meet Utilization Standards and

(b) Are located in Clearcutting Units or construction clearings or are otherwise designated for cutting.

B2.13 Damaged Timber.

B2.131 Damaged by Purchaser. Undesignated live trees meeting Utilization Standards:

(a) Within 200 feet slope distance from centerline of roads constructed hereunder that are damaged by Purchaser's construction to the extent that considerable deterioration or mortality is imminent and are designated by Forest Service for felling before the nearest road segment is Substantially Completed or

(b) That are damaged by Purchaser in logging and are subsequently Marked before Purchaser has completed skidding or yarding operations in the immediate area.

By agreement, such trees may be left without charge if their removal would cause undue damage or be grossly uneconomic.

B2.132 Negligent or Willful Damage. Undesignated timber meeting Utilization Standards and unnecessarily damaged or negligently or willfully cut by Purchaser, if included by Contracting Officer.

B2.133 Damage by Catastrophe. As provided under B8.32, undesignated live and dead timber within Sale Area, meeting Utilization Standards, and affected by Catastrophic Damage. "Catastrophic Damage" as used hereunder is major change or damage to Included Timber on Sale Area, to Sale Area, to access to Sale Area, or a combination thereof:

(a) Caused by forces, or a combination of forces, beyond control of Purchaser, occurring within a 12-month period, including, but not limited to, wind, flood, earthquake, landslide, fire, forest pest epidemic, or other major natural phenomenon and

(b) Affecting the value of any trees or products meeting Utilization Standards, within Sale Area and estimated to total either:

(i) More than half of the estimated timber volume stated in A2 or

(ii) More than two hundred thousand cubic feet (2,000 CCF) or equivalent.

Catastrophic Damage does not include changes caused by forest pest epidemics or foreseeable deterioration if Included Timber was sold for salvage or pest control.

B2.134 Minor Damage by Natural Causes. Undesignated trees within Sale Area and meeting Utilization Standards, in amounts less than specified in B2.133, that become insect infested, windthrown, suffer serious damage, or die, as designated by agreement.

B2.14 Unintentionally Cut Timber. Trees, within or immediately adjacent to Sale Area or to road

construction or other authorized clearing outside Sale Area, not designated for cutting under B2.3 but that are cut through mistake by Purchaser, when included by Contracting Officer.

B2.15 Construction Timber. Trees to be used for construction under B5.1.

B2.16 Other Material. Species or products not listed in A2, upon written approval of Contracting Officer under B3.41.

B2.2 Utilization and Removal of Included Timber. "Utilization Standards" for trees and minimum pieces are stated in A2. To meet minimum tree specifications, trees must equal or exceed tree diameters listed in A2 and contain at least one minimum piece. Except for timber required or authorized to be left, Purchaser shall fell and buck such trees and shall remove from Sale Area and present for Scaling all pieces that:

(a) Meet minimum piece standards in A2 or

(b) Do not meet such standards, but would have qualified as part of minimum pieces if bucking lengths were varied to include such material.

B2.3 Timber Designations. Timber designated for cutting shall be confined to Sale Area, except as provided in B2.131, B2.14, B2.15, B2.32, and B5.1. Sale Area Map indicates subdivisions, if any, where Marking under B2.35 is to be done after timber sale advertisement, except for construction clearing under B2.32, minor changes under B2.37, and damaged timber.

The boundaries of Clearcutting Units, Overstory Removal Units, and Understory Removal Units were plainly Marked on ground before timber sale advertisement and are shown on Sale Area Map. Boundary trees shall not be cut. The number of units and approximate acreage of timber designations are stated in A3.

B2.31 Clearcutting Units. All trees that meet Utilization Standards within "Clearcutting Units" are designated for cutting.

B2.32 Construction Clearing. All timber is designated for cutting that is within the clearing limits of roads constructed hereunder or is in other authorized clearings. All dead or unstable live trees are designated for cutting that are sufficiently tall to reach Purchaser's landings or the roadbed of Specified and Temporary Roads when Marked in advance of felling of timber in the immediate vicinity. Pieces meeting Utilization Standards from such dead or unstable live trees shall be removed, unless there is agreement that to do so could damage the road. Such designation may be revised as part of agreed changes in road location under B5.2.

B2.33 Overstory Removal Units. All trees within "Overstory Removal Units" are designated for cutting when they meet Utilization Standards and equal or exceed the diameter limits shown on Sale Area Map.

B2.34 Understory Removal Units. All trees within "Understory Removal Units" are designated for cutting when they meet Utilization Standards and are smaller than the diameter limits shown on Sale Area Map.

B2.35 Individual Trees. All trees to be cut, other than in the units described in B2.31, B2.32, B2.33, and B2.34, are Marked or designated by description. Trees are "Marked" when individually designated by Forest Service with paint marks above and below stump height.

Sale Area Map indicates areas plainly identified on the ground where leave trees are Marked to be left uncut.

B2.36 Incompletely Marked Timber. Trees within incompletely Marked subdivisions shown on Sale Area Map at time of timber sale advertisement shall be designated in accordance with C2.36. A representative sample of the timber to be designated has been Marked prior to timber sale advertisement in accordance with such rules. The approximate locations of the representative sample areas are shown on Sale Area Map.

B2.37 Minor Changes. Within Sale Area, minor adjustments may be made in boundaries of cutting units or in the timber individually Marked for cutting when acceptable to Purchaser and Forest Service.

B2.4 Volume Estimate. The estimated volumes of timber by species designated for cutting under B2.3 and expected to be cut under Utilization Standards are listed in A2. If Sale Area Map indicates that there are incompletely Marked subdivisions, the objective of Forest Service shall be to designate for cutting in such subdivisions sufficient timber so that Sale Area shall yield the approximate estimated volume by species or species groups stated in A2. However, the estimated volumes stated in A2 are not to be construed as guarantees or limitations of the timber volumes to be designated for cutting under the terms of this contract.

Volume adjustments shall not be made under this Section after there is modification for Catastrophic Damage under B8.32.

B2.41 Adjustment for Volume Deficit. If Sale Area Map indicates that there are incompletely Marked subdivisions and if Contracting Officer determines that a deficit in the estimated volume will cause the volume cut to be less than 90 percent of the total estimate shown in A2, Forest Service, upon request by Purchaser, shall designate additional timber within Sale Area. Such additional timber shall be limited to that estimated to be necessary to reach approximately the estimated volumes by species listed in A2. Any such additional designation shall be consistent with land and resource management plans.

B2.42 Adjustment for Excess Volume. If Sale Area Map indicates that there are incompletely Marked subdivisions and if Contracting Officer determines that the volume cut will be more than 120 percent of the total estimated volume listed in A2, Forest Service, upon request by Purchaser, shall make an adjustment in Marking or cutting unit boundaries with the objective of designating for cutting the approximate estimated volumes by species listed in A2. Such adjustments in volumes shall be confined to (a) Marking adjustments on Sale Area and (b) reduction in area to be cut over. Such adjustments or reductions shall not conflict with the silvicultural treatment being applied on Sale Area and shall not materially change the average value by species of the timber designated for cutting. Such adjustments may be made notwithstanding the provisions of B1.1 and B2.3.

If the timber designated for cutting is not reduced by such adjustments to less than 120 percent of the total es-

timated quantity listed in A2, Purchaser, after cutting 120 percent of the total estimated volume listed in A2, may elect to have Sale Area reduced to eliminate the remaining Included Timber. However, where felling operations have been started, units of minimum practical size shall be retained in Sale Area.

B3.0—RATES OF PAYMENT

B3.1 Current Contract Rates. Included Timber that is removed by Purchaser and presented for Scaling in the product form stated in A2 shall be paid for at Current Contract Rates determined under this Section. "Current Contract Rates" shall be (a) Flat Rates and (b) Tentative Rates adjusted by the escalation procedures in B3.2. Flat Rates and Tentative Rates shall be those listed in A4, unless superseded by rates redetermined under B3.3 or established for Contract Term Extension. In addition, Required Deposits shall be made as listed in A4, C5.32, and C6.816, or established under B3.3 or B8.23.

In the event Termination Date is adjusted under B8.21 or B8.212, Current Contract Rates shall be continued in the same manner as immediately prior to the adjustment period.

Notwithstanding B8.23, Current Contract Rates for timber cut and removed from Sale Area that remains unscaled after Termination Date, as adjusted or extended, shall be Current Contract Rates in effect on Termination Date.

"Current Contract Value" is the sum of the products of Current Contract Rates and estimated remaining unscaled volumes by species of Included Timber meeting Utilization Standards.

B3.2 Escalation Procedure. Tentative Rates for those species and products listed in A4a are subject to quarterly escalation in accordance with the following procedures: The calendar quarter index average for each price index described in A5 is the arithmetic average of the three such monthly price indices preceding January 1, April 1, July 1, and October 1. The difference between calendar quarter index average and Base Index listed in A4a shall be the basis for quarterly escalation. To arrive at Current Contract Rates for timber Scaled during the preceding calendar quarter, Tentative Rates for each species shall be reduced or increased by such difference, except when the calendar quarter index average is:

(a) Less than the Base Index, the reduction shall not result in a rate below Base Rate or

(b) Greater than the Base Index, the increase shall not exceed the difference between Tentative Rate and Base Rate.

In the event of Contract Term Extension, the escalation procedure will be used during the extension period, except that adjusted payment rates for any calendar quarter cannot be less than Tentative Rates, for each species and product group, established under B8.23 for the extension period.

B3.21 Unavailable Index. If an index described in A5 is no longer available, Contracting Officer may replace that index. If Contracting Officer determines that a replacement index does not exist, Current Contract Rates for the remainder of the timber sale shall be a Flat Rate. Flat Rates will be Tentative Rates adjusted by the arithmetic average of the index described in A5 for a 12-month period prior to its becoming unavailable using the quarterly adjustment procedure outlined in B3.2. Contracting Officer will determine availability and a beginning point to average the index for Flat Rates. Such Flat Rates are subject to rate redetermination as provided elsewhere under this contract.

B3.3 Rate Redetermination. Rates may be redetermined as set forth in this Section. Bid Premium Rates shall be added to all redetermined rates, except as provided in B3.31, B3.32, and B3.33.

Rate redeterminations shall be made in accordance with the standard Forest Service methods in effect 45 days prior to rate redetermination. Such methods shall take into consideration factors that may affect timber value at rate redetermination date.

Redetermined rates shall not be less than Base Rates listed in A4, except for reduction under B3.31, B3.32, or B3.33. Required Deposits shall be redetermined. Redetermined Specified Road construction cost is subject to the limitations of B5.26.

B3.31 Rate Redetermination for Environmental Modification. In the event of a contract modification under B8.33 or partial termination under B8.34, Contracting Officer shall make an appraisal to determine for each species the difference between the appraised unit value of Included Timber remaining immediately prior to the revision and the appraised unit value of Included Timber to be cut under the modification. The appraisal shall consider the estimated cost of any construction work listed in the Schedule of Items that was performed and abandoned.

Tentative Rates and Flat Rates in effect at the time of the revision will be adjusted by said differences to become Current Contract Rates. Accordingly, Base Rates shall be adjusted to correspond to the redetermined rates if redetermined rates are less than the original Base Rates, subject to a new Base Rate limitation of the cost of essential reforestation or 25 cents per hundred cubic feet or equivalent, whichever is larger. However, existing Base Indices shall not be changed under this Subsection.

Redetermined rates, or differences for rates subject to B3.2, and Required Deposits shall be considered established under B3.1 for timber Scaled subsequent to the contract revision.

B3.32 Rate Redetermination after Catastrophic Damage. In event of Catastrophic Damage and adjustment, if any, of Included Timber, Contracting Officer shall make an appraisal to determine for each species the catastrophe-caused difference between the appraised unit value of Included Timber remaining immediately prior to the catastrophe and the appraised unit value of existing and potential Included Timber immediately after the catastrophe. Included Timber is any that would not be eliminated under B8.32. Potential Included Timber is any that would be added under B8.32.

Tentative Rates and Flat Rates in effect at the time of catastrophe shall be adjusted by said differences to be-

come the redetermined rates for the purpose of a contract modification under B8.32. Accordingly, Base Rates shall be adjusted to correspond to the redetermined rates if redetermined rates are less than the original Base Rates, subject to new Base Rate limitations of 25 cents per hundred cubic feet or equivalent. However, existing Base Indices shall not be changed under this Subsection.

Upon agreement under B8.32, redetermined rates and Required Deposits shall be considered established under B3.1 for timber Scaled subsequent to Catastrophic Damage.

At time of such appraisal, Specified Road construction cost shall include the estimated cost of any construction work listed in the Schedule of Items performed and abandoned.

B3.33 Rate Redetermination for Market Change. In the event of delay or interruption, exceeding 90 days, under B8.33, Contracting Officer shall make an appraisal to determine for each species the difference between the appraised unit value of Included Timber immediately prior to the delay or interruption and the appraised unit value of Included Timber immediately after the delay or interruption. The appraisal shall be done after any rate redetermination done pursuant to B3.31, using remaining volumes.

Tentative Rates and Flat Rates in effect at the time of delay or interruption or established pursuant to B3.31 will be reduced, if appraised rates declined during the delay or interruption, to become Current Contract Rates. Increases in rates will not be considered. Accordingly, Base Rates shall be adjusted to correspond to the redetermined rates if redetermined rates are less than the original Base Rates, subject to a new Base Rate limitation of the cost of essential reforestation or 25 cents per hundred cubic feet or equivalent, whichever is larger. However, existing Base Indices shall not be changed under this Subsection.

Redetermined rates shall be considered established under B3.1 for timber Scaled subsequent to the delay or interruption.

B3.34 Emergency Rate Redetermination. Forest Service shall redetermine rates if, upon Purchaser's application, Forest Service determies that, because of changes in the timber market since the award date or the last rate redetermination under this provision, the Producer Price Index identified in A20 has declined by 25 percent. Rates shall be redetermined under B3.3 and shall be considered established under B3.1 for timber Scaled subsequent to Purchaser's application. This Subsection shall not apply during Contract Term Extension.

B3.4 Other Payment Rates.

B3.41 Material Not in A2. Incidental amounts of products or portions of trees of species listed in A2 that do not meet Utilization Standards may be removed without charge. Such material may be purposely removed in more than incidental amounts without charge upon written approval of Contracting Officer, and subject to agreement on deposits if needed for road maintenance and use.

Other species or products not listed in A2 may be cut and removed upon written approval of Contracting Officer and subject to agreement on rates of payment and deposits if needed for road maintenance and use.

When any material suitable for use in a product form included in A2 is removed in another product form, the rates of payment shall be not less than but approximately equivalent to Current Contract Rates and Required Deposits.

B3.42 Timber Cut Through Mistake. Undesignated timber meeting Utilization Standards, cut by Purchaser through mistake and included by Contracting Officer under B2.14, shall be removed and paid for at Current Contract Rates and Required Deposits, unless such material is not listed in A2. In such event, Contracting Officer, in accord with standard Forest Service methods, shall establish rates to be paid.

B3.43 Designated Timber Cut But Not Removed. Standard timber shall be removed, as provided in B2.2, prior to acceptance of subdivision for completion of logging under B6.36. There shall be no charge when:

(a) The leaving of incidental material is justified under existing conditions, including those under B6.4, or

(b) Cut timber is left by option or requirement, as under B2.31, B2.32, and B6.4.

B3.44 Undesignated Timber Damaged Without Negligence. Undesignated timber meeting Utilization Standards, damaged without negligence by Purchaser and designated by Forest Service under B2.131, shall be cut, removed, and paid for at Current Contract Rates and Required Deposits.

B3.45 Undesignated Timber Unnecessarily Damaged or Negligently or Willfully Cut. Undesignated timber meeting Utilization Standards and unnecessarily damaged or negligently or willfully cut by Purchaser, if included by Contracting Officer under B2.132, shall be cut, removed, and paid for at Current Contract Rates and Required Deposits that are in addition to liquidated damages under B3.46.

If such timber is of a species or size not listed in A2 or is of a quality different from designated timber, Contracting Officer shall establish payment rates in accord with standard Forest Service methods.

B3.46 Liquidated Damages. Unnecessary damage to or negligent or willful cutting of undesignated timber, as described in B3.45, on portions of Sale Area cut over under this contract is likely to cause substantial silvicultural or other damage to the National Forest. It will be difficult, if not impossible, to determine the amount of such damage. Therefore, Purchaser shall pay as fixed, agreed, and liquidated damages an amount equivalent to the amount payable at Current Contract Rates. If designated by Contracting Officer, Purchaser shall remove such damaged or cut timber and pay for it at Current Contract Rates.

B3.47 Defect Caused by Abnormal Delay. Scaling deductions made for rot, check, or other defect resulting from abnormal delay in Scaling caused by Purchaser shall be recorded separately and charged to Tim-

ber Sale Account at Current Contract Rates and applicable deposits.

B4.0—PAYMENTS

B4.1 Amount Payable for Timber. Current Contract Rates and Required Deposits in effect when the timber is Scaled shall be applied to the Scaled volume to determine the amount Purchaser shall pay.

B4.2 Timber Sale Account. "Timber Sale Account" is an account maintained by Forest Service of all Purchaser's deposits, credits, payment guarantees, and the charges for:

(a) Timber at Current Contract Rates;

(b) Slash disposal, road maintenance, and contract scaling at Required Deposit rates;

(c) Cooperative work at rates established by specific agreement under B4.218; and

(d) Other charges provided in this contract.

Cash deposits shall be recorded currently in such account.

Charges for timber cut shall be made when Forest Service prepares and furnishes to Purchaser periodic statements of volume and value of timber cut and Scaled. Charges subject to escalation under B3.2 shall be made initially on the basis stated in B4.214 and shall be adjusted at the end of each calendar quarter, as provided in B3.2.

B4.21 Cash Deposits. Within the limitations of this Subsection, Purchaser shall make cash deposits to meet Purchaser's obligations within 15 days of billing by Forest Service. Deposits shall be made to Forest Service, U.S.D.A., by mail or delivery to the address to be furnished by Forest Service. Forest Service shall explain the bill at the time it requests each deposit.

B4.211 Downpayment. The downpayment amount shown in A18 may not be applied toward any other payment required under the provisions of this contract, except damages determined pursuant to B9.4, transferred to other timber sales, or refunded until stumpage value representing 25 percent of the total bid value of the timber sale has been charged and paid for, or if 36 CFR 223.49(e) is applicable, the estimated value of the unscaled timber is equal to or less than the amount of the downpayment.

If Forest Service makes a determination that this contract should not have been included under increased downpayment requirements (36 CFR 223.49(e)), the downpayment shall be revised and applied in accordance with 36 CFR 223.49(f).

B4.212 Advance Deposits. Purchaser agrees to make cash deposits in advance of cutting to meet charges under B4.2.

Forest Service billings for advance cash deposits shall be in such amounts that Timber Sale Account will maintain an unobligated balance equal to the applicable charges for timber that Forest Service estimates will be cut in not less than 30 days and not more than 60 days. This advance cash deposit may be reduced to a smaller amount by the terms of B4.211, B4.213, B4.215, and/or B4.217. Except for amounts required pursuant to B4.211, B4.213, and B4.217, Purchaser shall not be required to make advance deposits above those required under this Item.

When the credit balance in Timber Sale Account is less than the amount due for timber estimated to be cut in 10 days, Contracting Officer will suspend all or any part of Purchaser's Operations until payment or acceptable payment guarantee is received.

B4.213 Periodic Payment Schedule. Purchaser shall make periodic payments for stumpage value, as shown in A19.

In the event Purchaser has not paid the amount(s) stated in A19 as stumpage for volume removed by the periodic payment determination date(s), Forest Service shall issue a bill for collection for the difference between the required amount and payments made by Purchaser. If payment(s) fall due on a date other than a normal billing date, the payment date shall be extended to coincide with the next Timber Sale Account billing date.

The amount of the periodic payment(s) will be reduced if the payment(s) would result in Purchaser's credit balance for timber charges exceeding the Current Contract Value.

Only cash may be used for this purpose. No other form of payment is acceptable. Forest Service will apply the payments to subsequent charges on this contract under the terms of B4.212.

Except for Contract Term Extension under B8.23, periodic payment determination date(s) that have not been reached shall be adjusted one day for each additional day of contract time granted.

B4.214 Deposits for Charges Subject to Escalation. Deposits requested to cover estimated charges for timber subject to escalation under B3.2 shall be based upon Current Contract Rates and related deposits in effect during previous calendar quarter.

B4.215 Deposits When Payment Guaranteed. To the extent payment guarantee is provided under B4.3, requirements for advance cash deposits under B4.212 shall be waived for the value of timber on Sale Area that is cut, but not removed, and for the value of products removed from Sale Area for not more than a monthly billing period, subject to the provisions of B4.4.

B4.216 Blanket Cash Deposits. Purchaser may make cash deposits under a written agreement to cover charges made under this and other timber sale contracts within the same National Forest. Forest Service shall allocate such deposits to such timber sales. When there is to be no timber cutting hereunder for 30 days or more and payment of current charges has been made, the allocation to this timber sale shall be reallocated to other timber sales within the same National Forest at Purchaser's request. Purchaser shall not start cutting until allocation has again been made to this timber sale.

B4.217 Extension Deposits. In the event of Contract Term Extension, Forest Service shall divide the difference between Current Contract Value as of the start of any Contract Term Extension and the credit balance of any deposit made pursuant to B4.213 by the number of whole months remaining in Normal Operating Season(s)

within the extension period to determine the amount of each "Extension Deposit."

Purchaser shall make the initial Extension Deposit prior to Forest Service executing the contract modification. In response to Forest Service billing under B4.21, Purchaser shall make advance cash deposits. Such deposits shall at least equal each Extension Deposit required for each whole month remaining in Normal Operating Season(s) during the extension period. Extension Deposits shall be due by the last day of each month during Normal Operating Season whether or not the volume that is covered by such deposits has been Scaled.

Due dates for Extension Deposits during the extension period may be delayed when Purchaser earns Contract Term Adjustment if Termination Date, as adjusted, results in one or more additional complete months within Normal Operating Season(s).

B4.218 Cooperative Deposits. On a basis of cooperation or assistance (16 USC 572) and by a written agreement, Forest Service shall perform all or portions of the work that Purchaser is obligated to perform under this contract, as well as furnish other services in connection with activities under this contract. When Forest Service is to perform such work, Purchaser shall make one or more deposits to cover the estimated cost of the work. On request of Purchaser, Forest Service shall render monthly accounts, as may be specified in such agreement.

B4.22 Temporary Reduction of Downpayment. When, under B8.33, Contracting Officer orders a delay or interruption of Purchaser's Operations for more than 30 days when scheduled operations would be occurring but for the order, the downpayment amount required shall be temporarily reduced upon the written request of Purchaser or at the discretion of the Contracting Officer. For the period of the delay or interruption, the downpayment on deposit may be reduced to $1,000 or two (2) percent of the downpayment amount listed in A18, whichever is larger.

Any downpayment amount temporarily reduced pursuant to this Subsection may be refunded or transferred at the request of Purchaser. However, if Purchaser has outstanding debt owed to the United States, Contracting Officer must apply the amount of downpayment that could be refunded to the debt owed in accordance with the Debt Collection Improvement Act, as amended (31 USC 3701, *et seq*.).

Upon Purchaser's receipt of bill for collection and written notice from Contracting Officer that the basis for the delay or interruption no longer exists, Purchaser shall restore the downpayment to the full amount shown in A18 within 15 days after the date the bill for collection is issued, subject to the provisions of B4.4. Purchaser shall not resume contract operations until the downpayment amount is fully restored.

B4.23 Refund of Excess Cash. If at any time the credit balance of Timber Sale Account exceeds the charges for timber that Forest Service estimates will be cut within the next 60 days, any portion of such excess that is due to cash in the account shall be refunded, if requested by Purchaser, unless deposited under B4.211, B4.213, or B4.217. If Purchaser plans no cutting within the next 60 days, Forest Service may refund the entire unencumbered cash balance, except as provided in this Subsection. After a refund for a shutdown, deposits shall be made to meet the requirements of B4.212 before additional timber may be cut.

B4.24 Refund after Scaling Completed. Any cash deposit, in excess of that required to meet charges under B4.2, shall be refunded or transferred within 15 days of Purchaser's request after Scaling is completed, except for amounts estimated to be required under B9.5.

B4.3 Payment Guaranteed by Bond or Deposited Securities. To guarantee payment, Purchaser may furnish and maintain an acceptable surety bond or deposit in a Federal Depository negotiable securities of the United States. The securities shall be deposited through the Regional Fiscal Agent accompanied by a power of attorney and agreement authorizing the bond-approving officer to sell or collect such securities if payment is not made within 15 days of billing by Forest Service. The penal sum of such surety bond or the market value at time of deposit of such negotiable securities shall be the maximum amount of the payment guaranteed.

For payment purposes, penal sum of the surety bond or market value at time of deposit of negotiable securities shall be in lieu of the performance bond furnished under B9.1.

B4.31 Blanket Bond. If Purchaser furnishes an acceptable bond, or deposits securities, in accordance with B4.3, to guarantee payment for timber from this and other timber sales within the same National Forest, the amount of such bond or deposited securities shall be allocated to such timber sales by Forest Service. When there is to be no timber cutting hereunder for 30 days or more and payment of current charges has been made, the allocation to this timber sale shall be reallocated to other timber sales at Purchaser's request. Purchaser shall not start cutting hereunder until this timber sale receives an allocation that will meet the obligation for payment guarantee.

B4.32 Letters of Credit for Payment Bond. Notwithstanding the provisions of B4.3, Purchaser may use letters of credit in lieu of a surety bond for payment bond purposes when approved by Contracting Officer.

B4.4 Payments Not Received. (a) Payments are due and payable on the date of issue indicated on the bill for collection. When a payment for timber cut and other charges is not received at the location designated by Forest Service by the date allowed in the bill for collection for receipt of payment, Contracting Officer will suspend all or any part of Purchaser's Operations until payment or acceptable payment guarantee is received. Other charges include, but are not limited to:

(i) Slash disposal, road maintenance, and contract Scaling deposits;

(ii) Cooperative work at rates established by specific agreement under B4.218;

(iii) Damages pursuant to B9.4;

(iv) Road use fees;

(v) Restoration of downpayment pursuant to B4.22;

(vi) Periodic payments pursuant to B4.213;

(vii) Extension Deposits pursuant to B4.217; and

(viii) Other mandatory deposits.

(b) Failure to pay amounts due by the date allowed in the bill for collection for receipt of payment shall be considered a breach under B9.3. The 30-day notice period prescribed therein shall begin to run as of the end of business on the date allowed for receipt of payments. If the performance or payment is guaranteed by surety bond, the surety will receive a copy of the written notification of breach. Demand will be made on the surety or other institution providing the guarantee or bond instrument for immediate payment 10 days after issuance of written notification of the breach.

(c) Pursuant to the Debt Collection Improvement Act of 1996, as amended, if payment is not received by Forest Service within 15 days after the date of issue indicated on the bill for collection:

(i) Simple interest shall be assessed at the higher of the Current Value of Funds Rate or the Prompt Payment Rate as established by the Secretary of the Treasury. Interest will begin to accrue as of the date of issue indicated on the initial bill for collection.

(ii) Debtors will be assessed administrative charges, in addition to the delinquent amount due. Administrative charges are those additional costs incurred by the Government in processing, handling, and collecting delinquent debts.

(iii) A penalty charge of six (6) percent per annum will be assessed on any portion of a debt delinquent more than 90 days. This penalty charge is in addition to interest and administrative charges under paragraphs (c)(i) and (c)(ii). The penalty charge shall accrue from the date of issue indicated on the bill for collection and shall be assessed on all outstanding amounts, including interest and administrative costs assessed under paragraphs (c)(i) and (c)(ii).

(iv) Payments will be credited on the date received by the Federal Depository or Collection Officer designated on the bill for collection.

(d) Forest Service remedies for Purchaser's failure to make payment for timber cut and other charges when due, except for accrual of interest, suspension of all or any part of Purchaser's Operations, and administrative offset, shall be stayed for so long as:

(i) A bona fide dispute exists as to Purchaser's obligation to make such payment and

(ii) Purchaser files and prosecutes a timely Claim.

B5.0—TRANSPORTATION FACILITIES

B5.1 Authorization. Purchaser is authorized to construct and maintain roads, bridges, and other transportation facilities, as needed for harvesting Included Timber on National Forest and other lands where Forest Service has such authority. As used in this contract "construct" includes "reconstruct."

Location and construction of Specified Roads shall be in accordance with B5.2. Unless otherwise provided herein, construction may be progressive during this contract. Maintenance shall be governed by B5.3. The location and clearing widths of all Temporary Roads or facilities shall be agreed to in writing before construction is started. "Temporary Roads" are roads other than Specified Roads that are constructed by Purchaser for the purpose of harvesting Included Timber.

Purchaser is authorized to cut and use for construction without charge construction timber designated by agreement.

B5.11 Requirements of Rights-of-Way. Purchaser's road construction and use of rights-of-way identified in attached list or C5.11 shall be confined to rights-of-way and limited by the related easements and stipulations, if any, unless Purchaser makes other arrangements that will not infringe upon or adversely affect the grantee's rights. Easements or right-of-way documents are available in the offices of the Forest Supervisor and District Ranger.

B5.12 Use of Roads by Purchaser. Except as provided herein, Purchaser is authorized to use existing National Forest system roads and Specified Roads listed in A7, when Forest Service determines that such use will not cause damage to the roads or National Forest resources.

If Purchaser's use of an existing temporary or National Forest system road, not listed in A7, cannot be satisfactorily accommodated without reconstruction, Purchaser shall be authorized to use such road upon agreement as to the minimum reconstruction work that Purchaser shall perform before hauling. When appropriate, such road shall be included in A7 as an alternate facility under B5.26.

C5.12 lists existing roads shown on Sale Area Map that for such reasons as limitations in structural capacity, safety, and protection of soil, water, and roads:

(a) Cannot be used for log hauling or

(b) May be used only under the restrictive limitations stated therein.

B5.2 Specified Roads. "Specified Roads" are roads, including related transportation facilities and appurtenances, shown on Sale Area Map and listed in A7. Purchaser shall construct Specified Roads used under this contract. Construction initiated by Purchaser on any such Specified Road shall be completed to an agreed terminus that meets Purchaser's needs and prevents unnecessary impact on National Forest resources. Construction to such terminus shall be in full accordance with Plans and specifications and the Schedule of Items identified in A7 or specifications attached hereto, except for agreed adjustments needed to accommodate such terminus. The "Schedule of Items" is a list and description of construction items, quantities, units of measure, methods of measurement, unit price, and total amount. Forest Service shall revise the Schedule of Items to show the estimated cost for the portion constructed to the revised terminus as a separate segment.

A Temporary Road shall not be constructed substantially on the location for a Specified Road, except by agreement.

In event of agreed substitution or revision of construction design, specifications, or performance responsibility under B5.212, B5.25, B5.26, or C5.215, A7 shall be modified. If Purchaser does not need a Specified Road or a portion of a Specified Road for harvesting Included Timber and the Specified Road is not constructed, the deletion of the road or road segment will be a mutually agreed Design Change and Timber Sale Account will be adjusted for the reduction in cost, as provided in B5.25.

References in the contract to specifications, standards, or test methods adopted by the American Association of State Highway and Transportation Officials (AASHTO), American Society for Testing and Materials (ASTM), General Services Administration (GSA), or other recognized national technical associations shall mean specifications, standards, or test methods, including interim or tentative issues, that are in effect on the date of timber sale advertisement.

B5.21 Engineering. Forest Service completed survey and design for Specified Roads prior to timber sale advertisement, unless otherwise shown in A8 or Purchaser survey and design are specified in A7. On those roads for which Forest Service completes the design during the contract, the design quantities shall be used as the basis for revising estimated costs stated in the Schedule of Items and adjusting Timber Sale Account.

Forest Service engineering shall be completed according to the schedule in A8. Should Forest Service be unable to perform the designated survey and design by the completion date or other agreed to time, upon written agreement, Purchaser shall assume responsibility for such work. In such event, Contracting Officer shall revise:

(a) A7 to show Purchaser's performance responsibility.

(b) The Schedule of Items to include costs of survey and design, as provided under B5.24, and adjust Timber Sale Account, as provided in B5.25. Forest Service shall calculate such costs, using unit rates comparable with those used in the Schedule of Items.

Purchaser shall furnish a schedule to Forest Service of specific dates for the start of construction. The schedule of construction shall be submitted to Forest Service for approval within 60 days after contract award and prior to beginning work. Purchaser's construction schedule shall reflect Forest Service survey and design completion dates. Forest Service may agree to Purchaser's request for an alternate date for starting construction.

Purchaser shall perform survey, design, and construction staking of Specified Roads to be engineered by Purchaser in accordance with specifications attached hereto. Based upon the quantities developed by such design, as approved by Forest Service, Contracting Officer shall revise the estimated costs stated in the Schedule of Items and adjust Timber Sale Account. The methods of computing such revised costs shall be consistent with the methods that would have been used had the engineering been performed prior to timber sale advertisement.

B5.211 Contract Plans. "Plans" are documents that show location, details, and dimensions of the work to be performed. On any of the contract Plans where a portion of the work is drawn out and the remainder is shown in outline, the parts drawn out shall apply to all other like portions of the work.

"Shop Drawings" include drawings, diagrams, layouts, schematics, descriptive literature, illustrations, lists or tables, performance and test data, and similar materials furnished by Purchaser to explain in detail specific portions of the work required by the contract. Purchaser shall submit a minimum of five (5) sets of required Shop Drawings to Forest Service, three (3) sets of which will be retained by Forest Service. Shop Drawings shall not exceed 24 inches by 36 inches in size. Approval or rejection and date will be noted or stamped on each set. Unless agreed otherwise, Forest Service shall approve or reject the Shop Drawings within 10 days of submission. Such approval of the Shop Drawings shall not be construed as a complete check, but will indicate only that the general method of construction and detailing is satisfactory. If the Shop Drawings are rejected, Purchaser must make the noted revisions and resubmit the Shop Drawings.

A change in the amount of construction work that exceeds construction tolerances specified in the specifications identified in A7 caused by a Forest Service error in construction staking shall be treated as a Design Change. When incompatible situations arise between Plans, specifications, and actual conditions on the ground, Purchaser shall make corrections pursuant to B5.253.

B5.212 Construction Staking. Purchaser shall avoid careless or negligent damage to construction stakes, flags, or marks. If such damage occurs, Purchaser shall be required to replace stakes necessary to construction. Purchaser's replacement staking shall be approved by Forest Service. Alternatively, upon Purchaser's request, Contracting Officer may agree to perform such work under B4.218.

When A7 shows that construction stakes are to be set by Forest Service after clearing, Purchaser shall submit to Forest Service a written schedule for clearing, construction staking, and construction that will provide Forest Service a reasonable period for setting construction stakes. Time for setting construction stakes may be modified by written agreement.

If Forest Service performs construction staking for Specified Roads, timing of such staking shall permit Purchaser's clearing and other construction activity to proceed without hindrance or delay, provided Purchaser's construction activity is reasonably consistent with needs identified in Purchaser's Operating Schedule or amendments thereto.

Should Forest Service be unable to perform construction staking in such reasonable period, upon written agreement, Purchaser shall assume the responsibility for construction staking for agreed upon portions of Specified Roads. In such event, Contracting Officer shall revise:

(a) A7 to show Purchaser's performance responsibility.

(b) The Schedule of Items to include costs of construction staking, as provided under B5.24, and adjust Timber Sale Account, as provided in B5.25. Forest Service shall calculate such costs, using unit rates comparable with those used in the Schedule of Items.

B5.22 Material Delivery. Within 60 days after award date, Purchaser shall provide Forest Service a written schedule showing the desired delivery dates of any material to be supplied by Forest Service. With reasonable notice, schedule may be amended by agreement. Forest Service agrees to make delivery within 15 days after the scheduled delivery dates that are at least 60 days after the schedule is submitted, unless prevented by causes beyond control of Forest Service.

If Purchaser does not provide Forest Service the written schedule within the period provided in this Subsection, Forest Service agrees to make delivery within 90 days after a late schedule is submitted, unless prevented by causes beyond control of Forest Service. After delivery to and written receipt by Purchaser, Purchaser is responsible for installation of needed material and for any loss of or damage to such material due to Purchaser's negligence prior to installation or return of unused material to Forest Service.

At Purchaser's option, Forest Service deliveries shall be to Purchaser's storage area, as agreed, or to the nearest practicable point to the job site along existing roads. Unused material shall be returned to Forest Service at location of delivery, unless agreed otherwise.

B5.23 Use of Partially Constructed Roads. Unless Contracting Officer determines that there is justification under existing conditions and ground conditions permit hauling without undue damage, portions of Specified Roads shall be Substantially Completed prior to their use for hauling timber. When necessary to facilitate construction and protect bridges and roads from damage, timber felled in construction and timber logged directly to the road from areas immediately adjacent thereto may be hauled before road construction is Substantially Completed. Such hauling shall be confined to periods when abnormal soil erosion and damage to National Forest lands will not result.

"Substantially Completed" means:

(a) Completion of grading and installation of drainage structures so they will function effectively and

(b) Laying the specified depth of base course, if any.

No more than half of Included Timber to be hauled over such portions of road shall be hauled until the base course has been applied.

Unless agreed otherwise, specified reconstruction shall be completed on any portion of road prior to hauling on that portion.

B5.24 Estimated Cost. Estimated costs by construction phases for Specified Roads listed in A7 are stated by segments in the Schedule of Items. Such estimated costs are subject to adjustment under B3.3, B5.2, B5.21, B5.212, B5.25, and B5.26. Appropriately adjusted costs shall be made a part of a revised Schedule of Items and shown as adjustments to Timber Sale Account. The revised Schedule of Items shall supersede any prior Schedule of Items when it is dated and signed by Contracting Officer and a copy is furnished to Purchaser.

B5.25 Construction Cost Adjustment. Contracting Officer, as provided in B5.21, B5.212, B5.251, B5.252, and B5.253, shall adjust Specified Road construction cost estimates in the Schedule of Items and show the adjustments as credits or debits to Timber Sale Account in the month when the road segment is accepted.

B5.251 Variation in Quantities. (a) This Item applies only to differences between quantities shown in the Schedule of Items and measured quantities actually constructed and accepted that are not covered under B5.252 or B5.253. Only changes in quantities where other than contract quantity or lump sum is specified in the Schedule of Items are subject to this Item.

(b) Adjustments to the Specified Road construction cost for variation in quantities shall be computed at unit rates established in the Schedule of Items for units of work actually constructed and measured in accordance with specified method of measurement shown in the Schedule of Items and described in the specifications identified in A7, except that:

(i) When quantity of authorized work performed or material furnished by Purchaser, under any item shown in the Schedule of Items and covered by this Item, is more than 115 percent of original quantity, use Current Unit Rates to calculate the adjustment for that portion of work above 115 percent of original quantity.

(ii) When quantity of authorized work performed or material furnished by Purchaser, under any item shown in the Schedule of Items and covered by this Item, is less than 85 percent of original quantity, Forest Service shall make a revised estimate of cost for such work. Any revised estimate shall use the same procedures as those used in original estimates using rates comparable to those used in computing the most recent cost estimate for the timber sale. The revised cost estimate shall take into account any increase or decrease in unit rates that results from a reduction in quantity of work.

(c) "Current Unit Rates" are Forest Service estimates of the unit rates for doing the work at the time the adjustment is approved.

B5.252 Physical Change. (a) Forest Service shall adjust the Specified Road construction cost if, prior to acceptance under B6.36, a physical change, caused by a single event and not due to negligence of Purchaser, results in an increase or decrease in work and/or materials furnished by Purchaser involving additional estimated cost of:

(i) More than $10,000 or

(ii) More than 10 percent of total Specified Road construction cost, whichever is less.

(b) Increases to the Specified Road construction cost shall include cumulative estimated costs of repairing damage from things such as slides, washouts, landslips, and fire. Plans and specifications shall be revised when necessary to meet new conditions. Quantities of work and/or materials determined from such revised Plans and specifications, together with estimated quantities of work and/or materials abandoned, shall be the basis for the revised Specified Road construction cost.

(c) Forest Service shall determine difference in quantities for portions of Specified Road affected by physical change by comparing most recent previous quantities with total of:

(i) Estimated quantities actually constructed prior to physical change, including work abandoned, and

(ii) Estimated quantities to be constructed following physical change.

(d) Forest Service shall calculate the amount of increase to the Specified Road construction cost by applying:

(i) Current Unit Rates to differences when quantities increase and

(ii) Unit rates comparable to those used in computing most recent cost estimate for the timber sale when quantities decrease.

(e) When quantity of authorized work to be performed or material furnished by Purchaser, under any item shown in the Schedule of Items, is reduced to less than 85 percent of original quantity, Forest Service shall make a revised estimate of cost for such work and adjust the Specified Road construction cost. Any revised estimate shall use the same procedures as those used in the original estimates using rates comparable to those used in the most recent cost estimate for the timber sale. The revised estimate shall take into account any increase or decrease in unit rates that results from a reduction in quantity of work.

B5.253 Design Change. (a) "Design Change" is a change in work and/or materials shown in the Schedule of Items and described in Plans or specifications that has been mutually agreed to in writing or ordered by Contracting Officer. Changes of a minor nature (such as adjustment in horizontal and vertical alignment, that do not exceed specified tolerance, necessary to maintain or balance earthwork quantities substantially as designed) and variation in quantities, as described in B5.251, shall not be considered Design Changes.

(b) Additions, deletions, or changes in types or diameter of culverts shown in Plans and changes in designated water sources shown on Plans shall be considered Design Changes.

(c) Forest Service may, by written notice from Contracting Officer, order changes in work to be performed and/or materials to be furnished by Purchaser within general scope of the contract. Such work shall:

(i) Be due to differences between anticipated and actual field conditions,

(ii) Be necessary to construct Specified Roads to design standards, or

(iii) Be necessary to assure stability of Specified Roads.

(d) In addition, Contracting Officer may include work to protect resource values in ordered Design Changes. Such work must be related to construction of Specified Roads and be necessary to prevent damage to soil and water values immediately tributary to Specified Roads. Other Design Changes may be made by mutual written agreement.

(e) Forest Service shall revise Plans and specifications as necessary to meet new conditions. Quantities of work and/or materials determined from such revised Plans and specifications, together with quantities of work and/or materials abandoned, shall be the basis for adjusting the Specified Road construction cost.

(f) Forest Service shall determine the difference in quantities for the portion of Specified Road affected by Design Change by comparing the most recent previous quantities with the total of:

(i) Estimated quantities actually constructed prior to Design Change and

(ii) Estimated quantities to be constructed following Design Change.

(g) Calculate the amount of adjustment to the Specified Road construction cost by applying:

(i) Current Unit Rates to difference when quantities increase and

(ii) Unit rates comparable to those used in computing most recent cost estimates of the timber sale when quantities decrease.

(h) When quantity of authorized work to be performed or material furnished by Purchaser, under any item shown in the Schedule of Items, is reduced to less than 85 percent of original quantity, Forest Service shall make a revised estimate of cost of such work and adjust the Specified Road construction cost. Any revised estimate shall use the same procedures as those used in original estimates using rates comparable to those used in the most recent cost estimate for the timber sale. The revised estimate shall take into account any increase or decrease in unit rates that results from a reduction in quantity of work.

B5.26 Alternate Facilities. If under Purchaser's Operating Schedule, roads needed for the removal of Included Timber differ substantially from Specified Roads, other roads may be added to A7. Contracting Officer shall assure that road routing, location, design, and needed easements will make such other roads acceptable as parts of the National Forest transportation facilities. Purchaser shall provide survey, design, and construction staking for such other roads.

Based on design quantities from such engineering, Forest Service shall estimate Specified Road construction costs of alternate facilities, using methods consistent with those used in the original computation of the Schedule of Items. If Specified Road construction costs for acceptable alternate facilities are less than the estimated costs of facilities listed in the original Schedule of Items that

Purchaser does not construct, Timber Sale Account shall be adjusted by Forest Service to reflect the reduction in costs. In event of rate redetermination under B3.3, such allowed costs shall be the redetermined estimated costs of facilities listed in the original Schedule of Items that Purchaser does not construct.

B5.27 Temporary Credit for Unamortized Specified Road Construction Cost. When, under B8.33, Contracting Officer orders a delay or interruption of Purchaser's Operations for more than 30 days when scheduled operations would be occurring but for the order, the Contracting Officer shall credit the unamortized cost of Specified Roads to Purchaser's Timber Sale Account, upon the written request of Purchaser or at the discretion of Contracting Officer. The amount credited to Purchaser shall be limited to stumpage paid above Base Rates.

Any Specified Road construction cost credited to Purchaser pursuant to this Subsection may be refunded or transferred at the request of Purchaser. However, if Purchaser has outstanding debt owing the United States, Contracting Officer must apply the amount of credit that could be refunded to the debt owed in accordance with the Debt Collection Improvement Act of 1996, as amended.

Upon written notice from Contracting Officer that the basis for the delay or interruption no longer exists, Purchaser shall pay for timber a per unit amount, in addition to Current Contract Rates, that is equal to the amount credited to Purchaser's Timber Sale Account divided by 80 percent of the estimated remaining volume of the contract, until the full amount credited to Purchaser has been returned.

B5.3 Road Maintenance. Purchaser shall maintain roads, commensurate with Purchaser's use, in accordance with Road Maintenance Requirements in C5.31 and the Road Maintenance Specifications. Performance of road maintenance work by Purchaser may be required prior to, during, or after each period of use. The timing of work accomplishment shall be based on Purchaser's Operating Schedule under B6.31.

When two or more commercial users are simultaneously using the same road where Forest Service is not requiring maintenance deposits, the commercial users will develop maintenance responsibilities and arrangements for accomplishing the work. Forest Service must agree to this plan. If the commercial users cannot agree on maintenance responsibilities, Forest Service shall resolve the differences.

If Purchaser elects to use different roads than those listed in C5.31, Forest Service shall determine Purchaser's commensurate share of road maintenance and revise road maintenance deposits in C5.32.

If Forest Service cannot perform its full commensurate share of road maintenance, Forest Service shall make a cash payment to Purchaser for performance of such work.

Unless agreed in writing, prehaul maintenance shall be completed on any portion of road prior to hauling on that portion. Maintenance, as used in this contract, does not include road reconstruction or repairs of an extraordinary nature.

B5.4 Use by Others. Forest Service shall have the right to use any road constructed by Purchaser under this contract for any and all purposes in connection with the protection and administration of the National Forest. Other parties, in connection with the logging of tributary National Forest timber, may use roads constructed by Purchaser hereunder when Contracting Officer determines that such use will not materially interfere with Purchaser's Operations. Third party use shall be contingent upon Contracting Officer determining, and third party agreeing to pay, a fair share of maintenance cost commensurate with such commercial use.

Unless otherwise provided in C5.4, Forest Service shall authorize other uses of roads constructed by Purchaser hereunder only if:

(a) Contracting Officer makes appropriate arrangements to relieve Purchaser of related maintenance costs commensurate with such other uses and

(b) Such other uses will not materially interfere with Purchaser's Operations.

Where Purchaser reconstructs a road having established use, Purchaser's use during reconstruction and thereafter shall be such as to reasonably accommodate such established use. Contracting Officer shall ensure that other users do not materially interfere with Purchaser's right to use such reconstructed road.

B6.0—OPERATIONS

B6.1 Representatives. Unless otherwise agreed, Purchaser shall designate, in writing, a representative who is authorized to receive notices in regard to performance under this contract and take related action. In no case shall Purchaser designate any representative to this contract who is currently debarred, proposed for debarment, or suspended by the Federal Government. Purchaser's representative shall provide a copy of the contract to Purchaser's field supervisor and persons authorized to assume responsibilities in the field supervisor's absence. Prior to initial operations and after shutdowns of 10 days or more, Purchaser's representative shall notify Forest Service 2 days, excluding weekends and Federal holidays, before any operations begin on Sale Area.

Purchaser's representative shall designate, in writing, a field supervisor, one of whose responsibilities shall be on-the-ground direction and supervision of Purchaser's Operations. The field supervisor shall be readily available to the area of operations when operations are in progress and shall be authorized to receive notices in regard to performance under this contract and take related action. The responsibilities of the field supervisor shall include the safeguarding of National Forest resources and performance within the terms of the contract. Purchaser representative will furnish Forest Service with names of persons authorized to assume responsibilities in field supervisor's absence. Such delegations may be made a part of Purchaser's annual Operating Schedule under B6.31.

Unless Contracting Officer designates another Forest Service representative and notifies Purchaser in writing,

the District Ranger is the representative of Forest Service. Forest Service representative shall:

(a) Receive notice in regard to performance under this contract,

(b) Take action in relation to this contract, and

(c) Be readily available to the area of construction and logging operations.

Contracting Officer or Forest Service representative shall designate other on-the-ground representatives in writing along with their specific contractual responsibilities and authority. Representatives with authority delegated in writing are the only Forest Service personnel authorized to provide notice or take related actions under the contract. Such delegation shall be made within 30 days of receipt of Purchaser's Plan of Operations.

B6.11 Notices. Notices by either party as to action taken or to be taken by the other respecting this contract shall be made in writing to the other party's designated representative.

B6.2 Improvements. Purchaser is authorized to construct on National Forest land, buildings, facilities, and other improvements needed to log Included Timber. Such construction shall be located where approved in writing by Forest Service and shall be constructed and used in a manner that will protect National Forest values.

Purchaser shall comply with the rules and regulations governing the operation of premises that are occupied and shall perform the contract in a manner that will not interrupt or interfere with the conduct of Forest Service business.

Forest Service shall grant written permission before any camp, quarry, borrow pit, storage, or service area, other than as shown on Plans, is opened or operated on National Forest land or administered lands. A camp is interpreted to include the campsite or trailer parking area of any employee agent, contractor, Subcontractor or their employees or agents working on the project for Purchaser. Such permission, if granted, shall be without charge to Purchaser.

B6.21 Removal. Unless Forest Service authorizes continued use, Purchaser shall remove or dispose of all improvements when no longer needed. Should Purchaser fail to remove or dispose of improvements within 6 months after Termination Date, Forest Service may dispose of improvements at Purchaser's expense under B9.5 or may, upon written notice to Purchaser, assume title to improvements in the name of the United States. In the latter event, Purchaser shall not be required to remove such improvements.

B6.22 Protection of Improvements. So far as practicable, Purchaser shall protect Specified Roads and other improvements (such as roads, trails, telephone lines, ditches, and fences):

(a) Existing in the operating area,

(b) Determined to have a continuing need or use, and

(c) Designated on Sale Area Map.

Purchaser shall keep roads and trails needed for fire protection or other purposes and designated on Sale Area Map reasonably free of equipment and products, slash, and debris resulting from Purchaser's Operations. Purchaser shall make timely restoration of any such improvements damaged by Purchaser's Operations and, when necessary because of such operations, shall move such improvements, as specified in C6.22.

B6.221 Protection of Improvements Not Owned by Forest Service. Forest Service will notify all utility companies, or other parties affected, and make arrangements for all necessary adjustments of the public utility fixtures, pipelines, and other appurtenances likely to be affected by Purchaser's Operations.

When Purchaser's Operations are adjacent to properties of railway, telephone, or power companies, or other property, work shall not begin until Purchaser has identified actions necessary to prevent damage.

Purchaser shall cooperate with the owners of any underground or overhead utility lines in their removal and/or rearrangement operations in order that these operations may progress in a reasonable manner, utility duplication or rearrangement work may be reduced to a minimum, and services shall not be unnecessarily interrupted.

In the event of interruption to utility services because of accidental breakage or as a result of lines being exposed or unsupported, Purchaser shall promptly notify the proper authority and shall cooperate with that authority in the restoration of service until the service is restored.

When materials are to be hauled across the tracks of any railway, Forest Service will make arrangements with the railroad for the use of any existing crossing or for any new crossing required. Purchaser shall make arrangements for use of alternate crossings. All construction work to be performed by Purchaser on the railroad right-of-way shall not damage railroad company's property.

B6.222 Protection of Property. In construction and reconstruction of Specified Roads, Purchaser shall not unnecessarily remove, deface, injure, or destroy trees, shrubs, or other natural features, unless specifically authorized. To the extent practicable, Purchaser shall confine operations to within the clearing limit or other areas designated in the contract and prevent the depositing of rocks, excavated materials, stumps, or other debris outside these limits.

Material that falls outside these limits shall be retrieved, disposed of, or incorporated in the work to the extent practicable and necessary to protect adjacent resource values, unless otherwise agreed.

B6.23 Protection of Land Survey Monuments. Forest Service shall appropriately designate on the ground all known survey monuments, section corners, and other corner accessories. Forest Service shall post identifying signs on two sides of each known bearing tree.

Forest Service shall arrange protective or perpetuative action that does not cause unnecessary delay to Purchaser in authorized clearings, such as Clearcutting Units and road construction, and in other instances where damage to monuments, section corners, and other corner accessories is unavoidable.

Purchaser shall protect all known survey monuments, witness corners, reference monuments, and bearing trees against avoidable destruction, obliteration, or damage

during Purchaser's Operations. If any known monuments, corners, or accessories are destroyed, obliterated, or damaged by Purchaser's Operations, Purchaser shall hire the appropriate county surveyor or a registered land surveyor to reestablish or restore at the same location the monuments, corners, or accessories. Such surveyors shall use procedures in accordance with the Bureau of Land Management "Manual of Instructions for the Survey of the Public Lands of the United States" for General Land Office surveys and in accordance with State law for others. Purchaser shall record such survey in appropriate county records.

B6.24 Protection Measures Needed for Plants, Animals, Cultural Resources, and Cave Resources.

(a) Areas, known by Forest Service prior to timber sale advertisement, needing special measures for the protection of plants, animals, cultural resources, and/or cave resources are shown on Sale Area Map and/or identified on the ground, and shall be treated as follows:

(i) Unless agreed otherwise, wheeled or track laying equipment shall not be operated in areas identified as needing special measures except on roads, landings, tractor roads, or skid trails approved under B5.1 or B6.422. Purchaser may be required to backblade skid trails and other ground disturbed by Purchaser's Operations within such areas in lieu of cross ditching required under B6.6. Additional special protection measures needed to protect such known areas are identified in C6.24.

(ii) Unless agreed otherwise, trees will not be felled into areas identified as needing special measures.

(iii) Purchaser shall conduct operations in a manner that does not damage or disturb identified areas. In the event that protective measures identified by the Forest Service are for any reason inadequate, Contracting Officer may delay or interrupt Purchaser's operations, under this Contract, and/or modify this Contract pursuant to B8.33.

(iv) Purchaser shall immediately notify the Forest Service if its operations disturb or damage any area identified as needing special protection, and shall immediately halt its operations in the vicinity of such area until the Forest Service authorizes continued operations. In the event that Purchaser's operations disturb or damage an area identified as needing special protection, then Purchaser shall reimburse the Forest Service for the full cost and expense of any evaluative and remedial measures undertaken by the Forest Service in connection with such disturbance or damage. Such payment shall not relieve Purchaser from civil or criminal liability under applicable law.

(b) Nothing contained in this Subsection shall establish, or be deemed to establish any express or implied warranty on the part of the Forest Service (i) that the Forest Service has identified all areas within the Sale Area requiring special protection, or (ii) that measures prescribed by the Forest Service for protection of such areas are adequate.

(c) Following sale advertisement, additional areas needing special measures for protection may be discovered or identified; protective measures may be revised or newly prescribed; and, additional species of plants and/or animals may be added to federal lists of protected species. In such event, Contracting Officer may delay or interrupt Purchaser's operations, under this Contract, and/or modify this Contract pursuant to B8.33.

(d) Discovery, by either the Purchaser or the Forest Service, of additional areas, resources, species, or members of species needing special protection shall be promptly reported to the other party.

B6.3 Control of Operations. Under this contract, "Purchaser's Operations" shall include activities of or use of equipment of Purchaser, Purchaser's employees, agents, contractors, Subcontractors, or their employees or agents, acting in the course of their employment in operations hereunder on National Forest system lands or within Forest Service protection boundary (unless acting under the immediate supervision of Forest Service).

Purchaser's Operations shall be conducted in a workmanlike and orderly manner. The timing of required Forest Service designation of work on the ground and the performance of other Forest Service work shall not be such as to cause unnecessary delay to Purchaser.

B6.31 Operating Schedule. Purchaser shall, before commencing operations, provide in writing an annual Operating Schedule of anticipated major activities and needs for logging Included Timber, such as logging, road maintenance, Scaling, and road construction, including construction staking under B5.212 and material delivery under B5.22. Upon reasonable notice to Forest Service, such schedule shall be subject to modifications necessitated by weather, markets, or other unpredictable circumstances.

Subject to B6.6 and when the requirements of B6.66 are met, Purchaser's Operations may be conducted outside Normal Operating Season. "Normal Operating Season" is the period(s) beginning and ending on the dates stated in A16 of any year.

B6.311 Plan of Operations. For timber sales with 2 or more years between award date and Termination Date, within 60 days of final award of contract, Purchaser shall furnish Forest Service a written general Plan of Operations that shall be in addition to the annual Operating Schedule required under B6.31. The Plan of Operations shall set forth planned periods for and methods of road construction, timber harvesting, and completion of slash disposal, erosion control measures, and other contractual requirements. Forest Service written approval of the Plan of Operations is prerequisite to commencement of Purchaser's Operations. Purchaser may revise this Plan of Operations when necessitated by weather, markets, or other unpredictable circumstances, subject to approval of Contracting Officer. In the event of delays beyond the control of Purchaser that qualify for Contract Term Adjustment, the Plan of Operations shall be adjusted by mutual agreement to accommodate the adjusted contract period.

B6.312 Plan of Operations for Road Construction. Annually, prior to start of construction, Purchaser shall submit a supplement to the Plan of Opera-

tions that shall include a schedule of proposed progress and a description of planned measures to be taken to provide erosion control for work in progress, including special measures to be taken on any segments of construction not Substantially Completed prior to periods of seasonal precipitation or runoff. Purchaser shall submit a revised schedule when Purchaser proposes a significant deviation from the progress schedule.

Prior to beginning construction on any portion of Specified Roads identified as sensitive on Plans, Purchaser and Forest Service shall agree on proposed method of construction.

B6.32 Protection of Residual Trees. Purchaser's Operations shall not unnecessarily damage young growth or other trees to be reserved.

B6.33 Safety. Purchaser's Operations shall facilitate Forest Service's safe and practical inspection of Purchaser's Operations and conduct of other official duties on Sale Area. Purchaser has all responsibility for compliance with safety requirements for Purchaser's employees.

In the event that Contracting Officer identifies a conflict between the requirements of this contract or agreed upon methods of proceeding hereunder and State or Federal safety requirements, the contract shall be modified and Purchaser may request an adjustment in Current Contract Rates to compensate for the changed conditions.

Unless otherwise agreed in writing, when Purchaser's Operations are in progress adjacent to or on Forest Service controlled roads and trails open to public travel, Purchaser shall furnish, install, and maintain all temporary traffic controls that provide the user with adequate warning of hazardous or potentially hazardous conditions associated with Purchaser's Operations. Purchaser and Forest Service shall agree to a specific Traffic Control Plan for each individual project prior to commencing operations. Devices shall be appropriate to current conditions and shall be covered or removed when not needed. Except as otherwise agreed, flagmen and devices shall be as specified in the "Manual on Uniform Traffic Control Devices for Streets and Highways" (MUTCD) and as shown on Plans, Sale Area Map, Traffic Control Plan, or in specifications attached hereto.

B6.34 Sanitation and Servicing. Purchaser shall take all reasonable precautions to prevent pollution of air, soil, and water by Purchaser's Operations. If facilities for employees are established on Sale Area, they shall be operated in a sanitary manner. In the event that Purchaser's Operations or servicing of equipment result in pollution to soil or water, Purchaser shall conduct cleanup and restoration of the polluted site to the satisfaction of Forest Service.

Purchaser shall maintain all equipment operating on Sale Area in good repair and free of abnormal leakage of lubricants, fuel, coolants, and hydraulic fluid. Purchaser shall not service tractors, trucks, or other equipment on National Forest lands where servicing is likely to result in pollution to soil or water. Purchaser shall furnish oil-absorbing mats for use under all stationary equipment or equipment being serviced to prevent leaking or spilled petroleum-based products from contaminating soil and water resources. Purchaser shall remove from National Forest lands all contaminated soil, vegetation, debris, vehicle oil filters (drained of free-flowing oil), batteries, oily rags, and waste oil resulting from use, servicing, repair, or abandonment of equipment.

B6.341 Prevention of Oil Spills. If Purchaser maintains storage facilities for oil or oil products on Sale Area, Purchaser shall take appropriate preventive measures to ensure that any spill of such oil or oil products does not enter any stream or other waters of the United States or any of the individual States.

If the total oil or oil products storage exceeds 1,320 gallons in containers of 55 gallons or greater, Purchaser shall prepare a Spill Prevention Control and Countermeasures Plan. Such plan shall meet applicable EPA requirements (40 CFR 112), including certification by a registered professional engineer.

Purchaser shall notify Contracting Officer and appropriate agencies of all reportable (40 CFR 110) spills of oil or oil products on or in the vicinity of Sale Area that are caused by Purchaser's employees agents, contractors, Subcontractors, or their employees or agents, directly or indirectly, as a result of Purchaser's Operations. Purchaser will take whatever initial action may be safely accomplished to contain all spills.

B6.342 Hazardous Substances. Purchaser shall notify the National Response Center and Contracting Officer of all releases of reportable quantities of hazardous substances on or in the vicinity of Sale Area that are caused by Purchaser's employees, agents, contractors, Subcontractors, or their employees or agents, directly or indirectly, as a result of Purchaser's Operations, in accordance with 40 CFR 302.

B6.35 Equipment Cleaning. (a) Areas, known by Forest Service prior to timber sale advertisement, that are infested with invasive species of concern are shown on Sale Area Map. A current list of invasive species of concern and a map showing the extent of known infestations is available at the Forest Supervisor's Office. For purposes of this provision, "Off-Road Equipment" includes all logging and construction machinery, except for log trucks, chip vans, service vehicles, water trucks, pickup trucks, cars, and similar vehicles.

(b) Purchaser shall adhere to the following requirements with regard to cleaning "Off-Road Equipment":

(i) Prior to moving Off-Road Equipment onto the Sale Area, Purchaser shall identify the location of the equipment's most recent operation. Purchaser shall not move any Off-Road Equipment that last operated in an area infested with one or more invasive species of concern onto Sale Area without having cleaned such equipment of seeds, soil, vegetative matter, and other debris that could contain or hold seeds, and having notified Forest Service, as provided in (iii). If the location of prior operation cannot be identified, then Purchaser shall assume that the location is infested with invasive species of concern.

(ii) Prior to moving Off-Road Equipment from a cutting unit that is shown on Sale Area Map to be infested with invasive species of concern to, or through any other area that is shown as being free of invasive species of concern, or infested with a different invasive species, Purchaser shall clean such equipment of seeds, soil, vegetative matter, and other debris that could contain or hold seeds, and shall notify the Forest Service, as provided in (iii).

(iii) Prior to moving any Off-Road Equipment subject to the cleaning requirements set forth above, Purchaser shall advise Forest Service of its cleaning measures and make the equipment available for inspection. Forest Service shall have 2 days, excluding weekends and Federal holidays, to inspect equipment after it has been made available. After satisfactory inspection or after such 2 day period, Purchaser may move the equipment as planned. Equipment shall be considered clean when a visual inspection does not disclose seeds, soil, vegetative matter, and other debris that could contain or hold seeds. Purchaser shall not be required to disassemble equipment unless so directed by the Forest Service after inspection.

(iv) If Purchaser desires to clean Off-Road Equipment on National Forest land, such as at the end of a project or prior to moving to, or through an area that is free of invasive species of concern, Purchaser shall obtain prior approval from Contracting Officer as to the location for such cleaning and measures, if any, for controlling impacts.

(v) Contracting Officer may order delay, interruption, or modification of this Contract pursuant to B8.33.

(c) Nothing contained in this Section shall be interpreted as creating any warranty on the part of the Forest Service that all locations of invasive species of concern have been described herein, elsewhere in this Contract, or designated on the ground. Following sale advertisement, additional locations may be described or designated, and other species may be added to the list of invasive species of concern. In such event, Contracting Officer may order delay, interruption, or modification of this Contract pursuant to B8.33.

(d) The parties shall promptly communicate with one another with respect to description or designation of additional locations; discovery of locations of new species or new infestation; and, addition of species to the list of invasive species of concern.

B6.36 Acceptance of Work. Upon Purchaser's written request and assurance that work has been completed, Forest Service shall perform an inspection within 5 days, excluding weekends and Federal holidays, so as not to delay unnecessarily the progress of Purchaser's Operations. Such a request may be for acceptance of:

(a) Any reasonable portion of Specified Road listed in the Schedule of Items;

(b) Specific requirements on a subdivision of Sale Area (such as logging, slash disposal, erosion control, or snag felling); or

(c) All contract requirements on a subdivision of Sale Area.

Forest Service may perform such inspections without request from Purchaser.

Within 2 days of inspection, excluding weekends and Federal holidays, Forest Service shall furnish Purchaser with written notice either of acceptance or of work remaining to be done.

In the event that Forest Service is unable to make such inspection within 5 days of Purchaser's request, Purchaser shall be notified in writing of necessity for postponement and time when inspection can be made. The same final approval procedure shall be used at the end of Purchaser's construction period on any completed portion of road.

When all contractual work of Purchaser has been accepted for any subdivision of Sale Area or cutting unit identified on Sale Area Map, subdivision or cutting unit shall be eliminated from Sale Area on written notice of either party to this contract.

B6.361 Acceptance of Specified Roads. Specified Road work may be accepted subject to completion of clearing work that does not affect the road structure when completion is delayed for reasons beyond control of Purchaser, such as adverse weather.

Specified Road work may be accepted subject to completion of planting and seeding for soil stabilization when completion is delayed for reasons beyond control of Purchaser, such as seasonal limitations. Purchaser shall complete planting or seeding on such road during the next suitable planting season.

Specified Road work may be conditionally accepted prior to the application of dust palliatives when application is not necessary to prevent dusting of the road surface due to climatic conditions. Purchaser shall apply dust palliative on such roads prior to use during periods when dusting may occur.

Prior to request for final inspection, Specified Road work, roadways, borrow pits, and quarries, occupied and no longer needed by Purchaser in connection with Purchaser's Operations, shall be cleared of all rubbish, excess materials, and temporary structures.

B6.4 Conduct of Logging. Unless otherwise specifically provided herein, Purchaser shall fell trees designated for cutting and shall remove the portions that meet Utilization Standards, as provided in B2.2, prior to acceptance of subdivision for completion of logging under B6.36. Forest Service may make exceptions for occasional trees inadvertently not cut or trees or pieces not removed for good reason, including possible damage to forest resources or gross economic impracticability at the time of removal of other timber. Logging shall be conducted in accordance with the following, unless C6.4 provisions set forth requirements to meet special or unusual logging conditions:

B6.41 Felling and Bucking. Felling shall be done to minimize breakage of Included Timber and damage to residual timber. Unless agreed otherwise, felling shall be done by saws or shears. Bucking shall be done to permit removal of all minimum pieces set forth in A2.

Purchaser may buck out cull material when necessary to produce pieces meeting Utilization Standards. Such bucked out material shall contain a minimum amount of sound wood, not in excess of the net scale in percentage of gross scale, or based on the merchantability factor, whichever is stated in A2. If necessary to assess extent of defect, Purchaser shall make sample saw cuts or wedges.

B6.411 Felling in Clearings. Insofar as ground conditions, tree lean, and shape of clearings permit, trees shall be felled so that their tops do not extend outside Clearcutting Units, construction clearings, and areas of regeneration cutting.

B6.412 Stump Heights. Stumps shall not exceed, on the side adjacent to the highest ground, the maximum heights set forth in A6, except that occasional stumps of greater heights are acceptable when Purchaser determines that they are necessary for safe and efficient conduct of logging. Unless otherwise agreed, Purchaser shall re-cut high stumps so they will not exceed heights specified in A6 and shall dispose of severed portions in the same manner as other logging debris. The stump heights shown in A6 were selected with the objective of maximum reasonable utilization of the timber, unless Sale Area Map shows special areas where stump heights are lower for aesthetic, land treatment, or silvicultural reasons.

B6.413 Bucking Lengths. Trees shall be bucked in various lengths to obtain the greatest utilization of material meeting Utilization Standards.

B6.414 Limbing. When Forest Service determines it is necessary to minimize damage to the residual stand during skidding, Purchaser shall cut exposed limbs from products prior to skidding. Purchaser may leave uncut those limbs that cannot be cut with reasonable safety.

B6.42 Skidding and Yarding. Methods of skidding or yarding specified for particular areas, if any, are indicated on Sale Area Map. Outside Clearcutting Units and construction clearings, insofar as ground conditions permit, products shall not be skidded against reserve trees or groups of reproduction and tractors shall be equipped with a winch to facilitate skidding.

B6.421 Rigging. Insofar as practicable, needed rigging shall be slung on stumps or trees designated for cutting.

B6.422 Landings and Skid Trails. Location of all landings, tractor roads, and skid trails shall be agreed upon prior to their construction. The cleared or excavated size of landings shall not exceed that needed for efficient skidding and loading operations.

B6.423 Skidding on Roads. Products may be skidded on permanent roads authorized for hauling under B5.12 only by prior written agreement.

B6.424 Arches and Dozer Blades. Unless otherwise specified in C6.424, skidding tractors equipped with pull-type arches or dozer blades wider than tractor width or C-frame width, whichever is greater, shall not be used in residual timber outside Clearcutting Units and other authorized clearings, except on constructed tractor roads or landings, unless there is written agreement that residual timber will not be damaged materially by such use.

B6.5 Streamcourse Protection. "Streamcourses" that are subject to provisions of this Section are shown on Sale Area Map. Unless otherwise agreed, the following measures shall be observed to protect Streamcourses:

(a) Purchaser's Operations shall be conducted to prevent debris from entering Streamcourses, except as may be authorized under paragraph (d). In event Purchaser causes debris to enter Streamcourses in amounts that may adversely affect the natural flow of the stream, water quality, or fishery resource, Purchaser shall remove such debris as soon as practicable, but not to exceed 2 days, and in an agreed manner that will cause the least disturbance to Streamcourses.

(b) Culverts or bridges shall be required on Temporary Roads at all points where it is necessary to cross Streamcourses. Such facilities shall be of sufficient size and design and installed in a manner to provide unobstructed flow of water and to minimize damage to Streamcourses. Trees or products shall not be otherwise hauled or yarded across Streamcourses unless fully suspended.

(c) Wheeled or track-laying equipment shall not be operated in Streamcourses, except at crossings designated by Forest Service or as essential to construction or removal of culverts and bridges.

(d) Flow in Streamcourses may be temporarily diverted only if such diversion is necessary for Purchaser's planned construction and Forest Service gives written authorization. Such flow shall be restored to the natural course as soon as practicable and, in any event, prior to a major storm runoff period or runoff season.

B6.6 Erosion Prevention and Control. Purchaser's Operations shall be conducted reasonably to minimize soil erosion. Equipment shall not be operated when ground conditions are such that excessive damage will result. Purchaser shall adjust the kinds and intensity of erosion control work done to ground and weather conditions and the need for controlling runoff. Erosion control work shall be kept current immediately preceding expected seasonal periods of precipitation or runoff.

If Purchaser fails to do seasonal erosion control work prior to any seasonal period of precipitation or runoff, Forest Service may temporarily assume responsibility for the work and any unencumbered deposits hereunder may be used by Forest Service to do the work. If needed for such work, Purchaser shall make additional deposits on request by Forest Service. Any money deposited or used for this purpose shall be treated as cooperative deposits under B4.218.

B6.61 Meadow Protection. Reasonable care shall be taken to avoid damage to the cover, soil, and water in meadows shown on Sale Area Map. Vehicular or skidding equipment shall not be used on meadows, except where roads, landings, and tractor roads are approved under B5.1 or B6.422. Unless otherwise agreed, trees felled into meadows shall be removed by endlining.

Resulting logging slash shall be removed where necessary to protect cover, soil, and water.

B6.62 Wetlands Protection. Wetlands requiring protection under Executive Order 11990 are shown on Sale Area Map. Vehicular or skidding equipment shall not be used in such wetlands, except where roads, landings, and tractor roads are approved under B5.1 or B6.422. Additional measures needed to protect such areas are provided in C6.62.

B6.63 Temporary Roads. As necessary to attain stabilization of roadbed and fill slopes of Temporary Roads, Purchaser shall employ such measures as outsloping, drainage dips, and water-spreading ditches.

After a Temporary Road has served Purchaser's purpose, Purchaser shall give notice to Forest Service and shall remove bridges and culverts, eliminate ditches, outslope roadbed, remove ruts and berms, effectively block the road to normal vehicular traffic where feasible under existing terrain conditions, and build cross ditches and water bars, as staked or otherwise marked on the ground by Forest Service. When bridges and culverts are removed, associated fills shall also be removed to the extent necessary to permit normal maximum flow of water.

B6.631 Temporary Roads to Remain Open. To maintain short term access to portions of Sale Area for post-sale treatments and other purposes after a Temporary Road has served Purchaser's purpose, pursuant to B6.63, Purchaser agrees, that on Temporary Roads designated on Sale Area Map as "Remain Open," to construct cross ditches and water bars, as designated, staked, or otherwise directed by Forest Service, that can be traversed by a normal two-wheel drive pickup truck. On "Remain Open" Temporary Roads, all bridges and culverts shall remain in place and ditches shall not be eliminated. All drainage structures shall be left in functional condition.

B6.64 Landings. After landings have served Purchaser's purpose, Purchaser shall ditch and slope them to permit water to drain or spread. Unless agreed otherwise, cut and fill banks around landings shall be sloped to remove overhangs and otherwise minimize erosion.

B6.65 Skid Trails and Fire Lines. Purchaser shall construct cross ditches and water-spreading ditches on tractor roads and skid trails, where staked or otherwise marked on the ground by Forest Service. Forest Service shall designate cross ditching on Purchaser-built fire lines prior to or during construction. By agreement, Purchaser may use other comparable erosion control measures, such as backblading skid trails, in lieu of cross ditching.

B6.66 Current Operating Areas. Where logging or road construction is in progress but not completed, unless agreed otherwise, Purchaser shall, before operations cease annually, remove all temporary log culverts and construct temporary cross drains, drainage ditches, dips, berms, culverts, or other facilities needed to control erosion.

Such protection shall be provided, prior to end of a Normal Operating Season, for all disturbed, unprotected ground that is not to be disturbed further prior to end of operations each year, including roads and associated fills, tractor roads, skid trails, and fire lines. When weather permits operations after Normal Operating Season, Purchaser shall keep such work on any additional disturbed areas as up to date as practicable.

B6.67 Erosion Control Structure Maintenance. During the period of this contract, Purchaser shall provide maintenance of soil erosion control structures constructed by Purchaser until they become stabilized, but not for more than 1 year after their construction. Contracting Officer may agree to perform such structure maintenance under B4.218, if requested by Purchaser, subject to agreement on rates. Purchaser shall not be responsible for repair of such structures damaged by other National Forest users whose activities are not a part of Purchaser's Operations.

B6.7 Slash Disposal. Purchaser's timing of product removal and preparatory work shall not unnecessarily delay slash disposal. Specific slash disposal measures to be employed by Purchaser are stated in C6.7 and are in addition to Required Deposits for slash disposal.

B6.8 Scaling. "Scaling," as used herein, involves:

(a) Various volume determination methods, such as log rule, sampling, measuring, linear measuring, counting, weighing, or another method or combination of methods;

(b) Various sites, such as truck Scaling stations, rollways, weighing stations, woods landings, water Scaling stations, or other sites; and

(c) Various geographic locations.

B6.81 Scaling Services. Scaling services shall be performed by Forest Service personnel or parties under contract to Forest Service, except that weighing services may be performed by personnel or parties approved by Forest Service. Scaling shall be provided in accordance with the instructions and specifications in A9. Scalers shall be currently certified to perform accurate Scaling services. The Scaling services provided shall be selected exclusively by Forest Service.

Scaling services may be Continuous, Intermittent, or Extended. "Continuous Scaling Services" is Scaling at one site five (5) 8-hour shifts a week, exclusive of Sundays and Federal holidays. "Intermittent Scaling Services" are non-continuous Scaling services. "Extended Scaling Services" are Scaling services exceeding Continuous Scaling Services and may include Sundays and designated Federal holidays.

Upon written request of Purchaser and approval of Contracting Officer, Forest Service may provide other services, such as but not limited to grading, tagging, or marking of Scaled logs.

B6.811 Scaling Location. Forest Service shall provide Scaling services at the Scaling site(s) shown in A10. The Scaling site(s) shown in A10 normally will be a non-exclusive site where more than one National Forest timber sale Purchaser may be served.

Purchaser may request, in writing, an alternate Scaling site, such as at a private mill yard, private truck ramp, or a privately operated log transfer facility. Contracting Officer may approve an alternate Scaling site, when Contracting Officer determines that Scaling conditions at an

alternate site are acceptable. Such conditions shall include at a minimum:

(a) Scaler safety and comfort,

(b) Product accountability and security,

(c) Facilities and practices conducive to accurate and independent Scaling, and

(d) The ability to provide for remote check Scaling.

Upon approval of an alternate Scaling site, Forest Service and Purchaser shall enter into a written memorandum of agreement governing Scaling at that alternate location. Purchaser agrees that Forest Service personnel or persons under contract with Forest Service shall perform Scaling services at an alternative Scaling site. In no instance shall Purchaser or employees of Purchaser perform Scaling services.

B6.812 Scaling Adjustments. Forest Service shall check the accuracy of the Scaling performed on National Forest logs. Scaling will be satisfactory if performed within the accuracy standards stated in governing instructions identified in A9. In the event Forest Service check Scale(s) shows a variance in net Scale in excess of the allowable variance, an adjustment to volume reported Scaled may be made by Forest Service.

Such adjustment will be based on the difference between Forest Service check Scale(s) and original Scale for sale volume Scaled within the adjustment period. The volume to which this difference will be applied will be:

(a) One-half of the volume Scaled between the last satisfactory check Scale and the first unsatisfactory check Scale or, if a period of 120 days or more occurs without Scaling National Forest timber for stumpage, the adjustment will be applied to 100 percent of the volume Scaled after this period and

(b) 100 percent of the volume Scaled between unsatisfactory check Scales and

(c) One-half of the volume Scaled between the last unsatisfactory check Scale and the next satisfactory check Scale, or if no satisfactory check Scale is completed and a period of 120 days or more occurs without Scaling of National Forest timber for stumpage, the adjustment will be applied to 100 percent of the volume Scaled since the last unsatisfactory check Scale.

Adjustments may increase or decrease the original Scaled volume. Adjustments will be applied to Timber Sale Account to correct charges for Included Timber, plus deposits, Scaled during the adjustment period.

B6.813 Delayed or Interrupted Scaling Services. In the event Scaling services are delayed or interrupted, Purchaser shall discontinue hauling. Purchaser agrees that in the event such a delay or interruption occurs for reasons not caused by Purchaser, its sole and exclusive remedy shall be:

(a) Contract Term Adjustment and

(b) Out-of-Pocket Expenses incurred as a direct result of the delay or interruption of Scaling services under this Item.

Purchaser further agrees that no logs will be presented for Scaling outside agreed upon Scaling services schedule.

B6.814 Weighing Services. Weighing services for stumpage payment purposes may be provided by either public or privately owned and operated weighing facilities. A “Weighing Services Agreement,” approved by the Forest Supervisor, must be executed at each weighing facility providing weighing services.

Scales used to weigh National Forest products for payment purposes must be a currently certified scale in accordance with State law and be capable of weighing the entire load of logs in a single operation. The weighing of less than the entire load or weighing two loads at once is prohibited. Unless otherwise agreed, the minimum sized weighing facility shall be a 60-ton capacity scale with a 10 foot by 70 foot platform or larger. The weighmaster must work in a position where it is possible to verify that the truck wheels are on or off the scales.

Weighing facilities shall meet the following minimum requirements:

(a) Be an electronic design,

(b) Use electronic load cells or have a fully enclosed and sealed weigh-beam,

(c) Have digital weight meters sealed with a seal approved by the State,

(d) Have a zero interlocking device on the printer,

(e) Have an automatic zero-setting mechanism,

(f) Have an automatic motion-detecting device,

(g) Be shielded against radio or electromagnetic interference, and

(h) Have a date and time stamp and gross and tare weights that print electronically with each weighing. Contracting Officer may waive electronic printing for public or third party weighing facilities.

Purchaser shall bear all charges or fees for weighing services.

B6.82 Presentation for Scaling. Purchaser shall present products so that they may be Scaled in an economical and safe manner. If prior to Scaling, Included Timber is to be mixed with other timber, Purchaser shall, prior to mixing, provide for distinguishing, by means approved by Forest Service, each product included in this contract.

Trees or pieces presented for Scaling that have not been bucked to separate material meeting minimum piece standards from material not meeting minimum piece standards due to diameter, shall be Scaled as though such bucking had been done.

Deductions made for rot, check, or other defects resulting from abnormal delay in Scaling caused by Purchaser shall be recorded separately and charged to Timber Sale Account under B3.47.

Any timber that has been removed from Sale Area during the period of this contract, but remains unscaled after Termination Date, shall be Scaled at the earliest reasonable date.

B6.83 Scaling Other Products. The Scaled volume of material presented for Scaling in forms other than those stated in A2, when appropriate, shall be converted to the A2 unit of measure by the application of standard converting factors and procedures in effect at the time the

sale was sold. Other converting factors may be used by written agreement.

B6.84 Accountability. When Scaling is performed away from Sale Area, products shall be accounted for in accordance with Forest Service written instructions or an Accountability Agreement between Forest Service and Purchaser and as follows:

(a) Purchaser shall plainly mark or otherwise identify products prior to hauling in accordance with B6.842;

(b) Forest Service shall issue removal receipts to Purchaser;

(c) Purchaser shall assign a competent individual at the landing to complete removal receipts and attach them to each load of products removed from Sale Area;

(d) Removal receipts shall be returned to Forest Service at periodic intervals;

(e) When products are in transit, the truck driver shall possess or display removal receipt and show it upon request as evidence of authority to move products;

(f) The scaler's portion of removal receipt shall be surrendered at point of Scaling, the unloading point, or as requested by Forest Service; and

(g) Purchaser shall notify Forest Service of lost or off-loaded logs and their location within 12 hours of such loss.

Purchaser shall not place products in storage for deferred Scaling until an accountability system has been agreed to in writing for a stated period.

B6.841 Route of Haul. As part of the annual Operating Schedule, Purchaser shall furnish a map showing the route of haul over which unscaled products will be transported from Sale Area to the approved Scaling location. Such route of haul shall be the shortest, most economical haul route available between the points.

Upon advance written agreement, other routes may be approved. All unscaled products removed from Sale Area shall be transported over the designated routes of haul. Purchaser shall notify Forest Service when a load of products, after leaving Sale Area, will be delayed for more than 12 hours in reaching Scaling location.

Purchaser shall require truck drivers to stop, if requested by Forest Service, for the following reasons:

(a) For accountability checks when products are in transit from Sale Area to the designated Scaling location or

(b) For a remote check Scale when products are in transit after being truck Scaled at the designated Scaling location.

Purchaser and Forest Service shall agree to locations for accountability checks and remote check Scales in advance of haul. Such locations shall be established only in areas where it is safe to stop trucks.

Forest Service shall notify Purchaser of the methods to be used to alert truck drivers of an impending stop.

B6.842 Product Identification. Before removal from Sale Area, unless Contracting Officer determines that circumstances warrant a written waiver or adjustment, Purchaser shall:

(a) Hammer brand all products that are eight (8) feet or more in length and one-third (1/3) or more sound, on each end that is seven (7) inches or more in diameter.

(b) West of the 100th meridian, paint with a spot of highway-yellow paint all domestic processing products that are eight (8) feet or more in length and one-third (1/3) or more sound, on each end that is seven (7) inches or more in diameter. Each paint spot must be not less than three (3) square inches in size.

Contracting Officer shall assign brands and, if Sale Area is within a State that maintains a log brand register, brands shall be registered with the State. Purchaser shall use assigned brand exclusively on logs from this sale until Contracting Officer releases brand. Purchaser will furnish and apply highway-yellow paint of a lasting quality (oil-base or equivalent).

All hammer brands and/or highway-yellow paint must remain on logs until they are domestically processed. Purchaser shall replace identifying marks if they are lost, removed, or become unreadable. Purchaser may remanufacture products into different log lengths. Except for logs remanufactured as part of the mill in-feed process immediately before processing, remanufactured products must be rebranded with the assigned timber sale brand and repainted with highway-yellow paint, unless otherwise agreed to in writing by Contracting Officer. For such remanufactured products, Contracting Officer may approve use of a brand to be used exclusively as a catch brand, in lieu of the assigned timber sale brand.

B6.85 Scaling Lost Products. The volume of lost products shall be determined by the best methods currently available, using data from the records for the period in which the loss occurred or the most applicable period if loss should occur substantially after cutting. In the absence of specific information indicating size or species of lost products, species distribution and volume for entire truckloads shall be assumed to be the same as the average volume Scaled per truck during the report period, and for individual products it shall be assumed that the volume and species were the average volume of the highest priced species Scaled during the report period.

B6.851 Scaling Lost Sample Loads. If Scaling is being done by sampling loads of logs, Purchaser shall present such sample loads for Scaling by Forest Service. If loads of logs selected to be sample Scaled are placed in the decks before they are Scaled, they will be considered as lost sample loads. It will be difficult, if not impossible, to determine the volume and species contained in such loads for payment purposes. Therefore, lost sample loads will be deemed to have a Scale volume and species composition equal to that of the highest value load Scaled during the sampling period, as established by Forest Service. If no sample loads were Scaled during the period, the Scale data for the high valued load will be taken from the most current preceding sampling period with Scale. Sample loads lost as a result of Forest Service actions shall be treated as non-Scaled loads.

B6.86 Scale Reports. Forest Service shall provide Purchaser a copy of Forest Service scaler's record, if requested in writing.

B6.9 Records. Upon request, Purchaser shall provide access to appropriate annual records in Purchaser's books and accounts to enable Forest Service to obtain and analyze accurate operating costs and selling price data for appropriate use in appraising Federal timber. Operating cost and selling price data shall include that applicable for appraising timber obtained from Federal sources in or processed in the Region. Purchaser shall provide access to such data on behalf of subsidiary entities owned or controlled by Purchaser to the extent they participate in harvesting, manufacturing, or marketing timber into products recognized in National Forest timber appraisals in the area. To a like extent, Purchaser shall request in writing Purchaser's contractors and Subcontractors to make such data available to Forest Service.

Information so obtained shall be treated as confidential, as provided in regulations issued by the Secretary of Agriculture (7 CFR 1.12), and shall be available for review by parties from whom such data are obtained.

B7.0—FIRE PRECAUTIONS AND CONTROL

B7.1 Plans. Prior to initiating Purchaser's Operations during Fire Precautionary Period, Purchaser shall file with Forest Service a Fire Prevention and Control Plan providing for the prevention and control of fires on Sale Area and other areas of Purchaser's Operations. Such plan shall include a detailed list of personnel and equipment at Purchaser's disposal for implementing the plan. This requirement may be met by preparing a single plan for more than one timber sale.

B7.2 Fire Precautions. Specific fire precautionary measures listed in C7.2 shall be applicable during Purchaser's Operations in "Fire Precautionary Period" described in A12. Contracting Officer may change the dates of Fire Precautionary Period by advance written notice, if justified by unusual weather or other conditions. Required tools and equipment shall be kept in serviceable condition and immediately available for fire fighting at all times during Purchaser's Operations in Fire Precautionary Period.

B7.21 Substitute Precautions. Forest Service may authorize substitute measures or equipment, or waive specific requirements by written notice, if substitute measures or equipment will afford equal protection or some of the required measures and equipment are unnecessary.

B7.22 Emergency Precautions. Forest Service may require the necessary shutting down of equipment on portions of Purchaser's Operations, as specified by the emergency fire precautions schedule of C7.22. Under such conditions, after Purchaser ceases active operations, Purchaser shall release for hire by Forest Service, if needed, Purchaser's shutdown equipment for fire standby on Sale Area or other areas of Purchaser's Operations and personnel for fire standby or fire patrol, when such personnel and equipment are not needed by Purchaser for other fire fighting or protection from fire. Equipment shall be paid for at fire fighting equipment rates common in the area or at prior agreed rates and, if Purchaser requests, shall be operated only by personnel approved by Purchaser. Personnel so hired shall be subject to direction and control by Forest Service and shall be paid by Forest Service at fire fighting rates common in the area or at prior agreed rates.

B7.3 Fire Control. Purchaser shall, both independently and in cooperation with Forest Service, take all reasonable and practicable action to prevent and suppress fires resulting from Purchaser's Operations and to suppress any forest fire on Sale Area. Purchaser's independent initial fire suppression action on such fires shall be immediate and shall include the use of all necessary personnel and equipment at Purchaser's disposal on Sale Area or within the distance of Sale Area stated in A13.

B7.31 Purchaser's Reinforcement Obligations. Whenever an Operations Fire or Negligent Fire, whether on or off Sale Area, or any other forest fire on Sale Area, has not been suppressed by initial action and appreciable reinforcement strength is required, Forest Service may require further actions by Purchaser until such fire is controlled and mopped up to a point of safety. Such actions may include any or all of the following as necessary to fight such fire:

B7.311 Suspend Operations. To suspend any or all of Purchaser's Operations.

B7.312 Personnel. To release for employment by Forest Service any or all of Purchaser's personnel engaged in Purchaser's Operations or timber processing within the distance of Sale Area stated in A13. Any organized crew so hired shall include Purchaser's supervisor, if any. Personnel so employed shall be paid at Forest Service standard emergency fire fighting rates.

B7.313 Equipment. To make available for Forest Service rental at fire fighting equipment rates common in the area or at prior agreed rates any or all of Purchaser's equipment suitable for fire fighting and currently engaged in Purchaser's Operations within the distance of Sale Area stated in A13. Equipment shall be operated only by personnel approved by Purchaser, if so requested by Purchaser.

B7.4 Fire Suppression Costs. Purchaser's obligations for cost of fire suppression vary according to three classifications of fires as follows:

B7.41 Operations Fire. An "Operations Fire" is a fire caused by Purchaser's Operations other than a Negligent Fire.

Forest Service, except as provided in B7.3, shall use cooperative deposits under B4.218 to perform fire suppression activities on Operations Fires. Purchaser agrees to reimburse Forest Service for such cost for each Operations Fire, subject to a maximum of the dollar amount stated in A14. The cost of Purchaser's actions, supplies, and equipment on any such fire provided pursuant to B7.3, or otherwise at the request of Forest Service, shall be credited toward such maximum. If Purchaser's actual cost exceeds Purchaser's obligation stated in A14, Forest Service shall reimburse Purchaser for the excess.

B7.42 Negligent Fire. A "Negligent Fire" is a fire caused by negligence or fault of Purchaser's Operations,

including, but not limited to, one caused by smoking by persons engaged in Purchaser's Operations during the course of their employment, or during rest or lunch periods; or if Purchaser's failure to comply with the requirements of B7.2 and B7.3 results in a fire starting or permits a fire to spread. Damages and the cost of suppressing Negligent Fires shall be borne by Purchaser.

B7.43 Other Fires on Sale Area. Forest Service shall pay Purchaser, at fire fighting rates common in the area or at prior agreed rates, for equipment or personnel furnished by Purchaser pursuant to B7.3, or otherwise at the request of Forest Service, on any fire on Sale Area other than an Operations Fire or a Negligent Fire.

B7.5 State Law. Purchaser shall not be relieved by the terms of this contract of any liability to the United States for fire suppression costs recoverable in an action based on State law, except for such costs resulting from Operations Fires. Amounts due Purchaser for fire fighting expenditures in accordance with B7.41 shall not be withheld pending settlement of any such claim or action based on State law.

B7.6 Performance by Contractor. Where Purchaser's employees, agents, contractors, Subcontractors, or their employees or agents perform Purchaser's Operations in connection with fire responsibilities, Purchaser's obligations shall be the same as if performance was by Purchaser.

B8.0—OTHER CONDITIONS

B8.1 Title and Liability.

B8.11 Title Passage. All right, title, and interest in and to any Included Timber shall remain in Forest Service until it has been cut, Scaled, removed from Sale Area or other authorized cutting area, and paid for, at which time title shall vest in Purchaser. For purposes of this Subsection, timber cut under cash deposit or payment guarantee under B4.3 shall be considered to have been paid for. Title to any Included Timber that has been cut, Scaled, and paid for, but not removed from Sale Area or other authorized cutting area by Purchaser on or prior to Termination Date, shall remain in Forest Service.

B8.12 Liability for Loss. If Included Timber is destroyed or damaged by an unexpected event that significantly changes the nature of Included Timber, such as fire, wind, flood, insects, disease, or similar cause, the party holding title shall bear the timber value loss resulting from such destruction or damage; except that such losses after removal of timber from Sale Area, but before Scaling, shall be borne by Purchaser at Current Contract Rates and Required Deposits. Deterioration or loss of value of salvage timber is not an unexpected event, except for deterioration due to delay or interruption that qualifies for Contract Term Adjustment or under B8.33.

In the event Included Timber to which Forest Service holds title is destroyed, Purchaser will not be obligated to remove and pay for such timber. In the event Included Timber to which Forest Service holds title is damaged, Contracting Officer shall make an appraisal to determine for each species the difference between the appraised unit value of Included Timber immediately prior to the value loss and the appraised unit value of timber after the loss. Current Contract Rates in effect at the time of the value loss shall be adjusted by differences to become the redetermined rates.

There shall be no obligation for Forest Service to supply, or for Purchaser to accept and pay for, other timber in lieu of that destroyed or damaged. This Subsection shall not be construed to relieve either party of liability for negligence.

B8.2 Period of Contract. All obligations of Purchaser shall be discharged not later than "Termination Date" stated in A15, unless it is adjusted pursuant to B8.21 or B8.212 or extended pursuant to B8.23 or B8.32, excepting only those obligations for which Forest Service has given written permission to delay performance. Such written permission shall be considered a Contract Term Adjustment for the purpose of Purchaser completing performance of obligations covered by such permission.

B8.21 Contract Term Adjustment. "Contract Term Adjustment" means adjustment only as provided for in the three circumstances described in this Subsection. Under these circumstances, the contract term shall be adjusted in writing to include additional calendar days in one or more Normal Operating Seasons equal to the actual time lost, except as limited by paragraph (b) in this Subsection.

To qualify for such adjustment, Purchaser shall give written notice of the lost time not later than 30 days after end of Normal Operating Season in which time was lost and at least 10 days before Termination Date. Contracting Officer shall make prompt written acknowledgment of such notice, indicating concurrence with the number of days in the notice or the number of days Forest Service considers as qualifying for the adjustment. Lost portions of days shall be disregarded in computing time lost. The three circumstances qualifying for a Contract Term Adjustment are:

(a) Purchaser experiences delay in starting scheduled operations or interruptions in active operations, either of which stops removal of Included Timber from Sale Area through curtailment in felling and bucking, yarding, skidding and loading, hauling, or road construction, as scheduled under B6.31, for 10 or more consecutive days during a Normal Operating Season due to causes beyond Purchaser's control, including, but not limited to, acts of God, acts of the public enemy, acts of the Government, labor disputes, fires, insurrections, or floods.

(b) Causes described in paragraph (a) substantially affect the disposition or processing of Included Timber during Normal Operating Season through their effects on primary timber processing facilities, with a resulting delay of 60 days or more in use of such facilities. In such event, Contract Term Adjustment shall not extend for more than 12 consecutive months.

(c) (i) Contracting Officer requests Purchaser, in writing, to delay or interrupt operations during the Normal Operating Season for any purpose other than suspension under B4.4 or B9.3 or

(ii) Purchaser suffers a delay or interruption of Purchaser's Operations affecting skidding, yarding, and loading because of fire emergency closure ordered by Forest Service (or another agency in its behalf), and the total of such lost time is 10 or more days during any Normal Operating Season.

If Termination Date is adjusted, as described in this Subsection, and later extended under B8.23, the appraisal for the extension shall be made as of the unadjusted Termination Date, but the date on which the new rates become effective, if higher than Current Contract Rates immediately prior to Termination Date, shall be the adjusted Termination Date.

B8.211 Delay in Reconstruction of Processing Facilities. Notwithstanding the 12-month limitation in B8.21, if Purchaser demonstrates a diligent effort has been made to replace primary timber processing facilities and that delays in doing so have been beyond Purchaser's control, Contracting Officer may authorize Contract Term Adjustment up to a total of 24 months.

B8.212 Market-Related Contract Term Addition. The term of this contract may be adjusted when a drastic reduction in wood product prices has occurred in accordance with 36 CFR 223.52. The Producer Price Index used to determine when a drastic reduction in price has occurred is stated in A20. Purchaser will be notified whenever the Chief determines that a drastic reduction in wood product prices has occurred. If the drastic reduction criteria specified in 36 CFR 223.52 are met for 2 consecutive calendar quarters, after contract award date, Contracting Officer will add 1 year to the contract term, upon Purchaser's written request. For each additional consecutive quarter such a drastic reduction occurs, Contracting Officer will, upon written request, add an additional 3 months to the term during Normal Operating Season. Contracting Officer must receive Purchaser's written request for a market-related contract term addition before the expiration of this contract.

The total amount of contract term addition is limited to the lesser of twice the length of the original contract or 3 years. The revised contract term may not exceed 10 years as a result of market-related contract term addition. Additional contract time may not be granted for those portions of the contract that have a required completion date or for those portions of the contract where Contracting Officer determines that the timber is in need of urgent removal or that timber deterioration or resource damage will result from delay.

B8.22 Termination for Catastrophe. In event of Catastrophic Damage, this contract may be modified under B8.32, following rate redetermination under B3.32, or terminated under this Subsection. Such termination shall not be considered a termination under B8.34.

B8.221 Termination by Purchaser. This contract shall be terminated, upon election and written notice by Purchaser, if Catastrophic Damage rate redetermination under B3.32 shows that the appraised weighted average Indicated Advertised Rate of all Included Timber remaining immediately prior to the catastrophe has been reduced through Catastrophic Damage by an amount equal to or more than the weighted average Current Contract Rate.

"Indicated Advertised Rates" are Forest Service estimates of fair market value of the timber.

B8.222 Termination by Forest Service. This contract may be terminated by written notice from Contracting Officer, if there is Catastrophic Damage and Purchaser does not agree, under B8.32, within 30 days of receipt from Contracting Officer of contract modifications proposed to permit the harvest of the catastrophe-affected timber.

B8.23 Contract Term Extension. "Contract Term Extension" means an extension of the term of this contract, at the request of Purchaser, under this Subsection. This Subsection does not obligate Contracting Officer to grant Contract Term Extension.

When such extension is made, Forest Service shall make an appraisal using standard Forest Service methods and appraisal data in effect 45 days prior to the original Termination Date. Bid Premium Rates shall be added to such appraised rates to establish Flat Rates or Tentative Rates for the extension period. In event rates so established would develop Current Contract Value immediately prior to such an extension that is less than Current Contract Value at that time, Flat Rates and Tentative Rates in effect immediately prior to extension shall be retained for the extension period.

In consideration for granting an extension, Purchaser shall pay the Government for Purchaser's failure to cut and remove timber meeting Utilization Standards prior to Contract Term Extension, an amount that shall be the total of the costs to the Government resulting from the delay in harvest of Included Timber. Such costs will be determined by Forest Service and shall include, but not be limited to, the following:

(a) Interest at the Current Value of Funds Rate established by the Secretary of the Treasury, on Current Contract Value of timber remaining on Sale Area, less the credit balance of any deposit made pursuant to B4.213, as of the original Termination Date, or as adjusted pursuant to B8.21 or B8.212, until the midpoint of the extension period;

(b) Increased costs of regeneration, including nursery stock loss, carryover, or replacement costs; and

(c) Costs of remarking timber on Sale Area, reestablishing cutting unit boundaries, and/or remarking areas requiring protection on Sale Area.

B8.231 Conditions for Contract Term Extension. Contracting Officer may grant Purchaser's written request for Contract Term Extension, if Purchaser has met all of the following conditions at time of Purchaser's request:

(a) At least 75 percent of estimated volume in A2 has been cut and removed from Sale Area.

(b) Specified Roads needed by Purchaser for removal of all Included Timber, in accordance with the approved Plan of Operations submitted pursuant to B6.311, were constructed and accepted by Forest Service prior to the applicable road completion date shown in C5.13.

(c) Purchaser's Operations to date have been in reasonable compliance with contract terms and the approved Plan of Operations under B6.311.

(d) All contractual requirements have been met by Purchaser and accepted by Forest Service on area cut over at time of Purchaser's request, except for areas where logging is in progress at time of Purchaser's request. Purchaser's burning of current slash or seeding or planting for erosion control may be temporarily waived, if weather or other considerations make such work impractical.

(e) Any payment required under B4.213 has been made.

Contract Term Extension shall not become effective, unless payments required by B8.23 have been paid and the initial Extension Deposit required by B4.217 has been made by the effective date of any extension.

B8.3 Contract Modification. The conditions of this timber sale are completely set forth in this contract. Except as provided in B8.32 and B8.33, this contract can be modified only by written agreement between the parties. Only Contracting Officer may make contract modifications, with compensating adjustments to Current Contract Rates where appropriate, on behalf of Forest Service.

B8.31 Changed Conditions. When it is agreed that the completion of certain work or other requirements hereunder would no longer serve the purpose intended because of substantial change in the physical conditions of Sale Area or Included Timber since the date of this contract, the requirements shall be waived in writing. The estimated cost of such waived work or other requirement shall be charged to Timber Sale Account.

B8.32 Modification for Catastrophe. In event of Catastrophic Damage, Forest Service, in consultation with Purchaser, shall outline on Sale Area Map:

(a) Any areas of catastrophe-affected live and dead timber meeting Utilization Standards and having undesignated timber so situated that it should be logged with the designated timber;

(b) If needed, any such areas where the damaged undesignated timber can reasonably be logged separately; and

(c) Areas of affected or unaffected timber that are to be eliminated from Sale Area.

Forest Service shall locate and post the boundaries of all such areas, as needed.

After Sale Area Map has been outlined under this Subsection, Forest Service may propose contract modification to permit the harvest of catastrophe-affected timber. If Purchaser accepts Forest Service proposed modifications, this contract shall be modified to include rates redetermined under B3.32 and other related revisions as necessary, such as revision of Operating Schedule to ensure prompt removal of affected timber when necessary to avoid further loss and provision for additional contract time, if needed.

B8.33 Contract Suspension and Modification.

(a) Contracting Officer may, by written order, delay or interrupt authorized operations under this contract or, notwithstanding B8.3, modify this contract, in whole or in part:

(i) To prevent environmental degradation or resource damage, including, but not limited to, harm to habitat, plants, animals, cultural resources, or cave resources;

(ii) To ensure consistency with land and resource management plans or other documents prepared pursuant to the National Environmental Policy Act of 1969, 42 USC 4321-4347;

(iii) To conduct environmental analysis, including, but not limited to, engaging in consultation pursuant to the Endangered Species Act of 1973, 16 USC 1531, et seq.; or

(iv) Upon agreement of the Regional Forester, due to administrative appeal or litigation, regardless of whether Contracting Officer's order is required by a court order or this contract is named in such a proceeding.

(b) In the event of an order delaying or interrupting Purchaser's Operations under this Subsection, Purchaser's remedy shall be:

(i) Contract Term Adjustment,

(ii) reimbursement for Out-of-Pocket Expenses,

(iii) rate redetermination to measure any decline in the market,

(iv) temporary reduction of downpayment,

(v) temporary credit for unamortized Specified Road construction cost, and

(vi) temporary bond reduction.

However, the foregoing remedies shall be available only to the extent that the Contracting Officer's order was the sole and exclusive cause of the delay or interruption of Purchaser's operations.

(c) In cases of modification under this Subsection, Purchaser shall only receive a rate redetermination pursuant to B3.31. However, if there is an order delaying or suspending operations in addition to a modification, then Purchaser shall also be entitled to the remedies provided under B8.33(b) for such delay or suspension.

(d) Remedies awarded to the Purchaser shall not be duplicative, and Contracting Officer shall have the right to structure remedies provided herein to avoid duplicative compensation.

(e) Purchaser agrees that this Subsection, and the remedies provided herein shall apply regardless of any finding by any court or administrative body that the Forest Service failed to comply with any statute, regulation and/or policy in connection with awarding, advertising, or authorizing this sale, or a similar sale. However, nothing in this Subsection precludes Purchaser from exercising rights under the Contract Disputes Act.

B8.34 Contract Termination This contract may be terminated, in whole or in part, by Forest Service or Purchaser, as provided in Items B8.341 and B8.342, respectively. In the event of any such termination, Purchaser shall be entitled to the applicable remedies, subject to the limitation upon duplicative compensation set forth in B8.33(d). Purchaser agrees that this Subsection, and the remedies contained in the following Items shall apply regardless of any finding by any court or

administrative body that the Forest Service failed to comply with any statute, regulation and/or policy in connection with awarding, advertising, or authorizing this sale, or a similar sale. However, nothing in this Subsection precludes Purchaser from exercising rights under the Contract Disputes Act.

B8.341 Termination by Forest Service. (a) The Chief or the Chief's designee may unilaterally terminate this contract, in whole or in part, for any of the reasons set forth in paragraph (a) of B8.33.

(b) Purchaser's compensation for termination of this contract under this Item shall be:

(i) refund or release of advanced deposits for timber cut but not removed,

(ii) reimbursement for Out-of-Pocket Expenses, and

(iii) replacement timber under subparagraph (c), and/or liquidated damages under subparagraph (d); provided that liquidated damages shall be available if, and only if, after good faith efforts, the Parties (1) cannot locate replacement timber or agree upon the applicable stumpage price, or (2) the volume of deleted timber exceeds the volume of any replacement timber.

(c) Subject to applicable laws, regulations and policies, Forest Service and Purchaser shall make good faith efforts to identify replacement timber of similar volume, quality, access, and topography within Sale Area. If suitable replacement timber cannot be located within Sale Area, the parties shall expand the search to the National Forest in which the Sale Area is located. Stumpage price shall be adjusted under B3.31 to account for differences between replacement timber and deleted timber. If Forest Service and Purchaser agree upon suitable replacement timber and the applicable stumpage price, then this contract shall not terminate and instead shall be modified pursuant to 36 CFR 223.85(c) and shall remain in force with respect to such replacement timber and, in the case of partial termination, any remaining Included Timber. If the parties cannot agree on suitable replacement timber or the applicable stumpage price of such timber, either party may end the search and Purchaser shall be compensated under subparagraph (d).

(d) Forest Service shall pay as fixed, agreed, and liquidated damages an amount equivalent to 15 percent of the estimated delivered log value of the volume of timber not harvested due to the termination or partial termination. Estimated delivered log value and volume of timber not harvested shall be determined by the Contracting Officer as of Termination Date, using Forest Service methods in use as of the Termination Date.

(e) In any instance of partial termination, in which the Forest Service deletes one or more cutting units from the Sale Area, Purchaser's sole and exclusive remedy with regard to remaining units shall be a rate redetermination pursuant to B3.31. Purchaser shall be required to complete Contract Operations with regard to remaining units and any obligations pertaining to cessation of operations on deleted units, including without limit erosion control, brush disposal, and road maintenance. If Purchaser fails to fulfill any such duty or obligation, then Contracting Officer may make deductions from compensation due Purchaser, including without limit costs and expenses of completing such work.

B8.342 Termination by Purchaser. (a) Purchaser may, by written notice, terminate this Contract, in whole or in part, as described herein,

(i) in the event of an order delaying or interrupting its operations pursuant to B8.33, or

(ii) in the event of an order modifying this Contract pursuant to B8.33, if Purchaser decides to reject the terms of the modification prior to its acceptance. Purchaser shall have the right to terminate this Contract in whole only when the Contracting Officer's order under B8.33 applies to all cutting units within the Sale Area. When the order affects only a portion of the cutting units, Purchaser shall have the right to terminate this Contract in part, by deleting one or more of the units covered by the Contracting Officer's order. The foregoing right of termination, in whole or in part, shall not exist when the delay, interruption, or modification arises from wind, flood, landslide, fire, forest pest epidemic, or other major natural phenomenon.

(b) Purchaser's compensation for termination of this Contract, in whole or in part, under this Item shall be:

(i) refund or release of advanced deposits for timber cut but not removed,

(ii) reimbursement for Out-of-Pocket Expenses, and

(iii) if the duration of the delay or interruption exceeds either six months of Normal Operating Season time, or one calendar year from the date of the order, then: replacement timber as provided under (c) and/or liquidated damages under (d); provided that liquidated damages shall be available if, and only if, after good faith efforts, the Parties (1) cannot locate replacement timber or agree upon the applicable stumpage price, or (2) the volume of deleted timber exceeds the volume of any replacement timber.

(c) Subject to applicable laws, regulations and policies, Forest Service and Purchaser shall make good faith efforts to identify replacement timber of similar volume, quality, access, and topography within Sale Area. If suitable replacement timber cannot be located within Sale Area, the parties shall expand the search to the National Forest in which the Sale Area is located. Stumpage price shall be adjusted under B3.31 to account for differences between replacement timber and deleted timber. If Forest Service and Purchaser agree upon suitable replacement timber and the applicable stumpage price, then this contract shall not terminate and instead shall be modified pursuant to 36 CFR 223.85(c) and shall remain in force with respect to such replacement timber and, in the case of partial termination, any remaining Included Timber. If the parties cannot agree on suitable replacement timber or the applicable stumpage price of such timber, either party may end the search and Purchaser shall be compensated under subparagraph (d).

(d) Forest Service shall pay as fixed, agreed, and liquidated damages an amount equivalent to 15 percent of the estimated delivered log value of the volume of

timber not harvested due to the termination or partial termination. Estimated delivered log value and volume of timber not harvested shall be determined by the Contracting Officer as of Termination Date, using Forest Service methods in use as of the Termination Date.

(e) In any instance of partial termination, in which Purchaser deletes one or more cutting units from Sale Area, Purchaser's sole and exclusive remedy with regard to remaining units shall be a rate redetermination pursuant to B3.31. Purchaser shall be required to complete Contract Operations with regard to remaining units and any obligations pertaining to cessation of operations on deleted units, including without limit, erosion control, brush disposal, and road maintenance. If Purchaser fails to fulfill any such duty or obligation, then Contracting Officer may make deductions from compensation due Purchaser, including without limit costs and expenses of completing such work.

B8.35 Out-of-Pocket Expenses. "Out-of-Pocket Expenses" are Unrecovered expenditures arising directly from performing the contract that were rendered unrecovered due to delay, interruption, or termination pursuant to B8.33 or B8.34. An expenditure is "Unrecovered" within the meaning of this Subsection when Purchaser did not gain the benefit of its expenditure because Contract operations were not permitted. In determining whether an expenditure is "Unrecovered," Contracting Officer shall not conclude that an award of liquidated damages constitutes the benefit of that expenditure.

(a) Out-of-Pocket Expenses shall not include, in particular and without limitation, any of the following:

(i) attorneys fees;

(ii) costs and expenses of operating a saw mill or other processing facility;

(iii) expectancy damages; and,

(iv) anticipatory profits.

(b) Forest Service shall reimburse Purchaser for only the following Out-of-Pocket Expenses:

(i) Out-of-Pocket Expenses for maintenance of the timber sale performance and payment bonds during the period when operations were delayed or interrupted or, if terminated, from the date operations were halted until the expiration of the bonds;

(ii) Out-of-Pocket Expenses for maintenance of the downpayment or other cash deposits during the period when operations were delayed or interrupted or, if terminated, from the date operations were halted until the cash is returned to Purchaser;

(iii) Out-of-Pocket Expenses for the lesser of move-out and move-in or leaving equipment and/or logging camps on site, if the Purchaser and Contracting Officer have agreed to leave equipment and/or logging camps on site in lieu of move-out and move-in;

(iv) Out-of-Pocket Expenses for felling, bucking, lopping, skidding, yarding, and decking any products so processed, but not removed from Sale Area because: (1) the sale was terminated, or (2) the products no longer meet Utilization Standards because of delay or interruption;

(v) If terminated, in whole or in part, Out-of-Pocket Expenses for unamortized Temporary Roads, road maintenance, dust abatement and improvements authorized under B6.2;

(vi) Out-of-Pocket Expenses for the investment in Specified Roads during the period when operations were delayed or interrupted or, if terminated in whole or in part, Out-of-Pocket Expenses for unamortized Specified Road construction and reconstruction; and

(vii) If terminated, in whole or in part, Out-of-Pocket Expenses for bid preparation, including review of sale offering.

(c) Purchaser shall submit documentation of claimed expenditures, including those actually paid and those for which the Purchaser has a legal obligation to pay but has not yet paid, and supporting analysis to Contracting Officer to assist in Contracting Officer's calculation of reimbursement. Contracting Officer shall determine the amount of reimbursement under this Subsection using information from Purchaser and/or Forest Service methods in use on the date that operations were delayed, interrupted, or terminated. Purchaser's failure to substantiate any claimed Out-of-Pocket Expense may constitute grounds for Contracting Officer's denial of reimbursement.

(d) Purchaser shall make reasonable efforts to minimize its Out-of-Pocket Expenses.

B8.36 Termination for Market Change. (a) In the event of delay or interruption under B8.33, exceeding 90 days, and Contract has not been modified to include replacement timber, this contract may be terminated upon election and written notice by Purchaser, if (i) a rate redetermination for market change under B3.33 shows that the appraised weighted average Indicated Advertised Rate of all Included Timber remaining immediately prior to the delay or interruption has been reduced through a market change by an amount equal to or more than the the weighted average Current Contract Rate, or (ii) the appraised value of the remaining timber is insufficient to cover the adjusted base rates as determined under B3.33.

(b) Prior to termination under this Subsection, Purchaser shall complete all obligations on areas not affected by the delay or interruption.

(c) Damages caused by termination of contract under this Subsection will be limited to Out-of-Pocket Expenses.

B8.4 Performance by Other than Purchaser. The acquisition or assumption by another party, under an agreement with Purchaser, of any right or obligation of Purchaser under this contract shall be ineffective as to Forest Service, until Forest Service has been notified of such agreement and Contracting Officer has given written approval. In no case shall such recognition or approval:

(a) Operate to relieve Purchaser of the responsibilities or liabilities Purchaser has assumed hereunder or

(b) Be given unless such other party:

(i) Is acceptable to Forest Service as a Purchaser of timber and assumes in writing all of the obligations to Forest Service under the terms of this contract as to the uncompleted portion thereof, or

(ii) Acquires the rights in trust as security and subject to such conditions as may be necessary for the protection of the public interests.

B8.5 Sale of Other Materials. Forest Service reserves the right to sell from Sale Area during the period of this contract any materials or products not subject to its terms, but shall not permit removal, possession, or use thereof that will materially interfere with Purchaser's Operations. Purchaser shall not be obligated to do any work made necessary by the action of others.

B8.6 Provisions Required by Statute.

B8.61 Covenant against Contingent Fees. Purchaser warrants that no person or agency has been employed or retained to solicit or secure this contract upon an agreement or understanding for a commission, percentage, brokerage, or contingent fee, excepting bona fide employees or bona fide established commercial agencies maintained by Purchaser for the purpose of securing business. For breach or violation of this warranty, Forest Service shall have the right to annul this contract without liability or to require Purchaser to pay, in addition to the contract price or consideration, the full amount of such commission, percentage, brokerage, or contingent fee.

B8.62 Officials Not to Benefit. No member of Congress or Resident Commissioner shall be admitted to any share or part of this contract or to any benefit that may arise therefrom, unless it is made with a corporation for its general benefit (18 USC 431, 433).

B8.63 Nondiscrimination in Employment. If the total value of this contract is in excess of $10,000, Purchaser agrees during its performance as follows:

(a) Purchaser will not discriminate against any employee or applicant for employment because of race, color, religion, sex, or national origin. Purchaser will take affirmative action to ensure that applicants are employed, and that employees are treated during employment, without regard to their race, color, religion, sex, or national origin. Such action shall include, but not be limited to, the following: employment, upgrading, demotion, or transfer; recruitment or recruitment advertising; layoff or termination; rates of pay or other forms of compensation; and selection for training, including apprenticeship. Purchaser agrees to post in conspicuous places, available to employees and applicants for employment, notices to be provided by Forest Service setting forth the provisions of this Subsection.

(b) Purchaser will, in all solicitations or advertisements for employees placed by or on behalf of Purchaser, state that all qualified applicants will receive consideration for employment without regard to race, color, religion, sex, or national origin.

(c) Purchaser will send to each labor union or representative of workers with which Purchaser has a collective bargaining agreement or other contract or understanding, a notice to be provided by Forest Service, advising the labor union or worker's representative of Purchaser's commitments under this Subsection, and shall post copies of the notice in conspicuous places available to employees and applicants for employment.

(d) Purchaser shall comply with all provisions of Executive Order No. 11246, as amended by Executive Order No. 11375 and Executive Order No. 12086, and the rules, regulations, and relevant orders of the Secretary of Labor.

(e) Purchaser will furnish all information and reports required by Executive Order No. 11246, as amended, and by the rules, regulations, and orders of the Secretary of Labor, or pursuant thereto, and will permit access to books, records, and accounts by Forest Service and the Secretary of Labor for purposes of investigation to ascertain compliance with such rules, regulations, and orders.

(f) In event of Purchaser's noncompliance with this Subsection or with any of such rules, regulations, or orders, this contract may be terminated or suspended, in whole or in part, and Purchaser may be declared ineligible for further Government contracts in accordance with procedures authorized in Executive Order No. 11246, as amended, and such other sanctions may be imposed and remedies invoked, as provided in Executive Order or by rule, regulation, or order of the Secretary of Labor, or as otherwise provided by law.

(g) Purchaser will include the provisions of paragraphs (a) through (f) in every subcontract or purchase order unless exempted by rules, regulations, or orders of the Secretary of Labor issued pursuant to Section 204 of Executive Order No. 11246, as amended, so that such provisions will be binding upon each Subcontractor or vendor. Purchaser will take such action with respect to any subcontract or purchase order as Forest Service may direct as a means of enforcing such provisions, including sanctions for noncompliance. Provided, however, that in the event Purchaser becomes involved in, or is threatened with, litigation with a Subcontractor or vendor as a result of such direction by Forest Service, Purchaser may request the United States to enter into such litigation to protect the interests of the United States.

B8.64 Debarment and Suspension Certification. Pursuant to 7 CFR Part 3017, Purchaser shall obtain certifications from its Subcontractors regarding debarment, suspension, ineligibility, and voluntary exclusion, including additional Subcontractors obtained after award of this contract. "Subcontractors" are participants in lower tier covered transactions.

Purchaser may rely upon a certification of a prospective Subcontractor that it is not proposed for debarment under 48 CFR 9.4, debarred, suspended, ineligible, or voluntarily excluded from participating in covered transactions or timber sales, unless Purchaser knows that the certification is erroneous.

Purchaser shall keep the certifications of its Subcontractors on file until timber sale Termination Date and any extensions thereof, and will provide a copy at the written request of Contracting Officer. Nothing contained in the foregoing shall be construed to require establishment of a system of records in order to render in good faith the certification required by this Subsection. The knowledge and information of Purchaser is not

required to exceed that which is normally possessed by a prudent person in the ordinary course of business dealings.

If Purchaser knowingly enters into a timber sale transaction with a person who is proposed for debarment under 48 CFR 9.4, suspended, debarred, ineligible, or voluntarily excluded from participation in covered transactions or timber sales, in addition to other remedies available to the Government, Forest Service may pursue available remedies, including suspension and/or debarment.

The Subcontractor for a timber sale shall complete a "Subcontractor Certification Regarding Debarment, Suspension, Ineligibility, and Voluntary Exclusion." An example of this certification is shown following the instructions for page 101 of this contract.

B8.65 Contract Consistency With Other Laws. The contract shall govern if State and local environmental quality laws conflict with or preclude performance of contractual requirements.

B9.0—PERFORMANCE AND SETTLEMENT

B9.1 Performance Bond. As a further guarantee of the faithful performance of the provisions of this contract, Purchaser delivers herewith and agrees to maintain a surety bond in the dollar amount stated in A17, unless the amount is adjusted as provided in B9.11 or B9.13. In lieu of surety bond, Purchaser may deposit into a Federal Depository, as directed by Forest Service under B4.21, and maintain therein, cash in the dollar amount stated in A17 or negotiable securities of the United States having market value at time of deposit of not less than the dollar amount stated in A17.

Any adjustment or extension of time for completion of this contract beyond 1 year may be granted only with the consent of surety on bond or delivery of a new bond. Should the sureties on the bond delivered herewith, or any bond delivered hereafter in connection with this contract, become unsatisfactory to Forest Service, Purchaser shall, within 30 days of receipt of demand, furnish a new bond with surety satisfactory to Forest Service.

B9.11 Bond Reduction. Upon Purchaser's written request, Contracting Officer shall redetermine the amount of Purchaser's performance bond to an amount not less than Purchaser's remaining obligations, including the value of Included Timber remaining on Sale Area, plus the estimated cost of uncompleted work required of Purchaser and any unpaid billings due on the timber sale. Contracting Officer shall provide written notice of the redetermined amount to Purchaser and to Purchaser's surety. Similarly, Contracting Officer shall report to Purchaser in writing the amount of deposited cash or deposited securities required thereafter, if such deposits exist in lieu of a surety bond.

As soon as security for the performance of this contract or the settlement of Claims incident thereto is no longer necessary, appropriate notice shall be given to surety or deposits that may have been made in lieu of surety bond shall be returned to Purchaser, subject to the conditions in B9.5.

B9.12 Letters of Credit. Notwithstanding the provisions of B9.1, approved letters of credit may be used in lieu of a surety bond for performance bond purposes. Such letters of credit shall be subject to approval by Contracting Officer.

B9.13 Temporary Bond Reduction. When, under B8.33, Contracting Officer orders a delay or interruption of Purchaser's Operations for more than 30 days when scheduled operations would be occurring but for the order, the performance bond amount required shall be temporarily reduced upon the written request of Purchaser or at the discretion of Contracting Officer. For the period of the delay or interruption, the performance bond may be reduced to an amount not less than the estimated cost of uncompleted work required of Purchaser and any unpaid billings due on the timber sale.

Upon Purchaser's receipt of written notice from Contracting Officer that the basis for the delay or interruption no longer exists, Purchaser shall restore the performance bond to the full amount shown in A17 within 15 days. Purchaser shall not resume contract operations until the performance bond amount is fully restored.

B9.2 Disputes. This contract is subject to the Contract Disputes Act of 1978 (41 USC 601, *et seq.*). Except as provided in the Contract Disputes Act of 1978, all disputes arising under or relating to this contract shall be resolved in accordance with this Section.

As used herein, "Claim" means a written demand or assertion by one of the parties seeking, as a legal right, the payment of money, adjustment or interpretation of contract terms, or other relief, arising under or relating to this contract. A voucher, invoice, or request for payment that is not in dispute when submitted is not a Claim. However, where such submission is subsequently not acted upon in a reasonable time, or disputed either as to liability or amount, it may be converted to a Claim. A Claim by Purchaser shall be made in writing and submitted to Contracting Officer for decision. A Claim by the Government against Purchaser shall be subject to a decision by Contracting Officer.

For Purchaser Claims of more than $100,000, Purchaser shall submit with the Claim a certification that the Claim is made in good faith; the supporting data are accurate and complete to the best of Purchaser's knowledge and belief; and the amount requested accurately reflects the contract adjustment for which Purchaser believes the Government is liable. Purchaser, if an individual, shall execute the certification. When Purchaser is not an individual, the certification shall be executed by a senior company official in charge at Purchaser's plant or location involved or by an officer or general partner of Purchaser having overall responsibility for the conduct of Purchaser's affairs.

For Purchaser Claims of $100,000 or less, Contracting Officer must render a decision within 60 days. For Purchaser Claims in excess of $100,000, Contracting Officer must decide the Claim within 60 days or notify Purchaser of the date when the decision will be made.

Contracting Officer's decision shall be final unless Purchaser appeals or files a suit.

The authority of Contracting Officer does not extend to Claims or disputes that by statute or regulation other agencies are expressly authorized to decide.

Interest, at the Prompt Payment Rate established by the Secretary of the Treasury, on the amount found due on Purchaser's Claim shall be paid from the date the Claim is received by Contracting Officer until the date of the payment.

Except as the parties may otherwise agree, pending final resolution of a Claim of Purchaser arising under the contract, Purchaser shall proceed diligently with the performance of the contract in accordance with Contracting Officer's decision.

B9.21 Time Limits for Submission of Claim. Failure by Purchaser to submit a Claim within established time limits shall relinquish the United States from any and all obligations whatsoever arising under the contract or portions thereof. Purchaser shall file such Claim within the following time limits:

(a) When Purchaser constructs Specified Road, Purchaser must file any Claim not later than 60 days after receipt of Forest Service written notification of acceptance;

(b) When Forest Service constructs Specified Road, Purchaser must file any Claim not later than 60 days after receipt of Forest Service written notification authorizing use of road;

(c) For subdivisions or cutting units, Purchaser must file any Claim not later than 60 days after receipt of Forest Service written notification that subdivision or cutting unit has been accepted; and

(d) In all other cases, Purchaser must file any Claim not later than 60 days after receipt of Contracting Officer written notification that timber sale is closed.

B9.22 Contract Documents. All contract documents are intended to be consistent with each other. In case of discrepancy, the following is the order of precedence:

(a) Special Provisions (C)

(b) Sale Area Map

(c) Specific Conditions (A) and Schedule of Items

(d) Standard Provisions (B)

(e) Special project specifications

(f) Plans, such as slash, erosion control, and dust abatement

(g) Agreements between Purchaser and Forest Service, as authorized under the contract

(h) Plans:

(i) Figured dimensions over scaled dimensions

(ii) Large scale Plans over small scale Plans

(i) Standard specifications

(j) Lists and/or tables in Plans over any conflicting notations on Plans

(k) Shop Drawings

B9.3 Breach. In event Purchaser breaches any of the material provisions of this contract, Forest Service shall give Purchaser notice of such breach and, allowing reasonable time for remedy of such breach and of Forest Service's election to suspend, may give notice to suspend all or any part of Purchaser's Operations. Such notice of breach and notice to suspend Purchaser's Operations shall be written, except oral notices may be given if such breach constitutes an immediate threat to human life or a threat of immediate and irreparable damage to National Forest resources. Notwithstanding Section B6.1, such oral suspension notice may be given to Purchaser's work supervisor or, in work supervisor's absence, to those performing the operation. An oral suspension notice shall be promptly followed by telephone notice and a written explanation from Forest Service to Purchaser.

Suspension under this Section shall not entitle Purchaser to any remedies arising under B8.33.

Immediately upon oral or written suspension, Forest Service representative shall notify Contracting Officer of the suspension and related circumstances. Contracting Officer shall promptly review the suspension to determine if the suspension should be continued or lifted. Such suspension shall be lifted as early as conditions permit.

Upon receipt of oral or written notice of such breach, Purchaser shall remedy the breach as follows:

(a) If remedying such breach requires on-the-ground action by Purchaser, Purchaser shall have 30 practicable operating days during Normal Operating Season to remedy the breach, except under emergency conditions when action should not be delayed to prevent major damage or

(b) If such breach does not require on-the-ground action by Purchaser, such breach shall be remedied within 30 days.

B9.31 Termination for Breach. Contracting Officer, with the concurrence of the Regional Forester, may terminate this contract for breach in the event Purchaser:

(a) Is convicted for violation of criminal statutes, civil standards, or any other offense indicating a lack of business integrity or honesty that seriously and directly affects the responsibility of Purchaser; including, but not limited to:

(i) Theft, forgery, bribery, embezzlement, falsification or destruction of records, making false statements, or receiving stolen property, any of which occurred in connection with obtaining, attempting to obtain, selling, trading, or processing public timber;

(ii) Fraud, criminal offenses, or violation of Federal or State antitrust laws, any of which occurred in connection with obtaining, attempting to obtain, or performing a public contract or subcontract; or

(iii) Threatening, resisting, intimidating, or interfering with Forest Officers engaged in, or on account of, the performance of their official duties involving the protection, improvement, or administration of National Forest lands;

(b) Is convicted for violation of criminal statutes or civil standards, orders, permits, or other regulations for environmental protection issued by a Federal agency, State agency, or political subdivision thereof in the conduct of operations hereunder on National Forest lands, pursuant to B6.01;

(c) Has engaged in a pattern of activity that demonstrates flagrant disregard for the terms of this contract, such as, but not limited to, repeated suspensions for breach pursuant to B9.3, causing undesignated timber meeting Utilization Standards to be unnecessarily dam-

aged or negligently or willfully cut, or causing other serious environmental degradation or resource damage;

(d) Fails to comply with contract provisions related to nondiscrimination in employment; or

(e) Fails to remedy a breach of contract within time limits stated in B9.3.

Damages due the United States for termination under this Subsection shall be determined pursuant to B9.4.

B9.4 Damages for Failure to Cut or Termination for Breach. (a) In event of Purchaser's failure to cut designated timber on portions of Sale Area by Termination Date or termination for breach under B9.31, Forest Service shall appraise remaining Included Timber, unless termination is under B8.22 or B8.34. Such appraisal shall be made with the standard Forest Service method in use at time of termination.

(b) If the sale is resold, damages due shall be the amount by which Current Contract Value, plus costs described in paragraph (d) of this Section, exceeds the resale value at new Bid Rates.

(c) If the contract is not reoffered or there are no responsive bids on the reoffered contract, damages due shall be the amount by which Current Contract Value exceeds the value determined by appraisal, plus costs described in paragraph (d) of this Section.

(d) If applicable, the following costs shall be included in damages:

(i) The cost of resale or reoffering, including, but not limited to, salary costs, document preparation and duplication costs, mailing costs, and timber sale advertisement costs.

(ii) If Purchaser has failed to cut individual trees in the portions of Sale Area cut over and there is no resale of such individual trees, Purchaser shall pay Forest Service for cost of felling and removal or otherwise eliminating such uncut trees, except for occasional trees not cut for reasons stated in B6.4.

(iii) The Government's loss caused by the delay in receipt of stumpage payments. Such loss will be measured by interest at the Current Value of Funds Rate established by the Secretary of the Treasury, on the unpaid contract value at Termination Date. Interest will be charged for the total number of months, or portions thereof, from Termination Date until midpoint of the contract resale period, less any time in excess of 1 year needed to make the resale.

(iv) Any increase in reforestation costs, including site preparation, seeding, and planting caused by Purchaser's failure to harvest Included Timber by Termination Date.

B9.5 Settlement. If obligations of Purchaser have not been fully discharged by Termination Date, any money advanced or deposited hereunder shall be retained and applied toward unfulfilled obligations of Purchaser without prejudice to any other rights or remedies of Forest Service. Such funds may be treated as cooperative deposits under B4.218 for uncompleted work 30 days after receipt of written notice from Contracting Officer to Purchaser of work to be done and Purchaser's failure to deny the obligation or to do the work.

B9.6 Contract Closure. Contracting Officer shall give appropriate written notice to Purchaser when Purchaser has complied with the terms of this contract. Purchaser shall be paid refunds due from Timber Sale Account under B4.24 and excess cooperative deposits under B4.218.

DIVISION C

Special Provisions

In accordance with A21, the Sections, Subsections, and Items therein listed are attached and made a part hereof. The material is indexed by the numbering system used in Division B. The numbers after the C (that identifies material in this Division) indicates the Part, Section, Subsection, or Item of Division B that is being supplemented or modified by each particular provision included in this Division.

C2.35# (OPTION 1) - INDIVIDUAL TREE DESIGNATION *(06/2008)*

All **trees meeting the attached designation description** which meet the minimum tree diameter stated in A2 are designated for cutting. Additional timber to be cut, if any, will be designated for cutting in accordance with B2.37.

Leave trees, Marked with **orange** , or identified by **boundary tags** are not to be cut, unless designated by the Forest Service.

C3.47# - ABNORMAL DELAY *(09/2004)*

Unless otherwise agreed, felled timber meeting Utilization Standards shall be removed by Purchaser pursuant to B2.2 and shall be presented for Scaling within the time period indicated in the following removal schedule. The number of days shown are consecutive calendar days.

Failure to remove and present such timber for Scaling within the required time limits will be considered abnormal delay, subject to B3.47.

See attached removal schedule.

Sale Name: Hy Wah

C4.211 - DOWNPAYMENT *(06/2007)*

The downpayment amount shown in A18 may not be applied toward any other payment required under the provisions of this contract, except damages determined pursuant to B9.4, transferred to other timber sales, or refunded until (a) stumpage value representing 25 percent of the total bid value of the timber sale has been charged and paid for, or (b) the estimated value of the unscaled timber is equal to or less than the amount of the downpayment, or (c) if 36 CFR 223.49(e) is applicable, the estimated value of the unscaled timber is equal to or less than the amount of the downpayment.

If Forest Service makes a determination that this contract should not have been included under increased downpayment requirements (36 CFR 223.49(e)), the downpayment shall be revised and applied in accordance with 36 CFR 223.49(f).

C4.212 - TEMPORARY REDUCTION OF DOWNPAYMENT *(08/2009)*

Notwithstanding B4.211 or C4.211, upon the Purchaser's written request Forest Service may temporarily reduce the downpayment when Purchaser's scheduled operations are delayed or interrupted for 30 or more consecutive days, or the contract term is extended for 30 or more consecutive days for any of the following reasons:

(1) Forest Service requests or orders Purchaser to delay or interrupt operations for reasons other than breach;

(2) Purchaser interrupts or delays scheduled operations to work on a sale designated by the Forest Service as in urgent need of harvesting; or

(3) An adjustment of the contract term authorized upon a determination of substantial overriding public interest, including a market-related contract term addition, or an urgent removal contract term extension under 36 CFR 223.53.

When Purchaser is not cutting or removing timber under contract during a qualifying period of delay, interruption, or extension listed above the downpayment may be reduced to $1000 or 2 percent of the downpayment amount stated in the contract, whichever is greater. The Purchaser must restore the downpayment to the full amount stated in the contract within 15 days from receipt of the bill for collection and written notice from the Contracting Officer that the basis for temporarily reducing the downpayment no longer exists. Purchaser shall not cut or remove timber on a contract where the downpayment has been temporarily reduced until the downpayment amount stated in the contract is fully restored.

C4.4 - PAYMENTS NOT RECEIVED *(08/2012)*

(a) Payments are due and payable on the date of issue indicated on the bill for collection. When a payment for timber cut and other charges is not received at the location designated by Forest Service by the date specified in the bill for collection for, Contracting Officer will suspend all or any part of Purchaser's Operations until payment or acceptable payment guarantee is received. Other charges include, but are not limited to:

(i) Slash disposal, road maintenance, and contract Scaling deposits;

(ii) Cooperative work at rates established by specific agreement under B4.218;

(iii) Damages pursuant to B9.4;

(iv) Road use fees;

(v) Restoration of downpayment pursuant to B4.22;

(vi) Periodic payments pursuant to B4.213;

(vii) Extension Deposits pursuant to B4.217; and

(viii)Other mandatory deposits.

(b) Failure to pay amounts due by the date specified in the bill for collection shall be considered a breach under B9.3. The 30-day notice period prescribed therein shall begin to run as of the end of business on the date specified for receipt of payments. If the performance or payment is guaranteed by surety bond, the surety will receive a copy of the written notification of breach. Demand will be made on the surety or other institution providing the guarantee or bond instrument for immediate payment 10 days after issuance of written notification of the breach.

(c) Pursuant to the Debt Collection Improvement Act of 1996, as amended, if payment is not received by Forest Service within 15 days after the date of issue indicated on the bill for collection:

(i) Simple interest shall be assessed at the Current Value of Funds Rate as established by the Secretary of the Treasury. Interest will begin to accrue as of the date of issue indicated on the initial bill for collection.

(ii) Debtors will be assessed administrative charges, in addition to the delinquent amount due. Administrative charges are those additional costs incurred by the Government in processing, handling, and collecting delinquent debts.

(iii) A penalty charge of six (6) percent per annum will be assessed on any portion of a debt delinquent more than 90 days. This penalty charge is in addition to interest and administrative charges under paragraphs (c)(i) and (c)(ii). The penalty charge shall accrue from the date of issue indicated on the bill for collection and shall be assessed on all outstanding amounts, including interest and administrative costs assessed under paragraphs (c)(i) and (c)(ii).

(iv) Payments will be credited on the date received by the Federal Depository or Collection Officer designated on the bill for collection.

(d) Forest Service remedies for Purchaser's failure to make payment for timber cut and other charges when due, except for accrual of interest, suspension of all or any part of Purchaser's Operations, and administrative offset, shall be stayed for so long as:

(i) A bona fide dispute exists as to Purchaser's obligation to make such payment and

(ii) Purchaser files and prosecutes a timely Claim.

C5.1# (OPTION 1) - TEMPORARY ROAD AND LANDING CONSTRUCTION *(06/2008)*

In addition to the requirements of B5.1 and B6.63, Purchaser and Forest Service will agree to the design, construction, maintenance, closure, and obliteration of all Temporary Roads.

Construction of Temporary Roads in areas shown on Sale Area Map shall be in accordance with the attached plans or criteria.

Unless otherwise agreed, if Purchaser's Operations require more than **800** cubic **yards** of rock for Temporary Roads, landings, or other temporary uses, such rock shall be obtained from commercial sources.

PLANS AND/OR CRITERIA PURSUANT TO C5.1# (OPTION 1) - TEMPORARY ROAD AND LANDING CONSTRUCTION (06/2008)

C5.12# - USE OF ROADS BY PURCHASER *(06/1999)*

Purchaser's use of existing roads identified on Sale Area Map by the following codes is prohibited or subject to restrictive limitations, unless agreed otherwise:

Code	Use Limitations
X	Hauling prohibited
R	Hauling restricted
U	Unsuitable for hauling prior to completion of agreed reconstruction
P	Use prohibited
A	Public use restriction
W	Regulation waiver

Roads coded A will be signed by the Forest Service to inform the public of use restrictions. Purchaser's use of roads coded R, A, or W shall be in accordance with the following restrictions:

See Restricted Road List Table.

Sale Name: Hy Wah

C5.13# - ROAD COMPLETION DATE *(04/2004)*

Construction of Specified Roads shall be completed no later than **10/31/2015** ; except for earlier construction completion dates for roads listed below:

Road Number	Road Name	Station From	Station To	Completion Date
N/A				

Completion date is binding on the party that constructs road, whether Purchaser or Forest Service. Contracting Officer shall modify the completion date in writing to conform to the approved Plan of Operations under B6.311 at the request of Purchaser.

When Purchaser elects Forest Service construction of Specified Roads shown in sale advertisement, Forest Service may adjust construction completion date when road construction is delayed or interrupted for causes that qualify for an adjustment of the completion date of Forest Service's road construction contract. When qualifying delays or interruptions of road construction occur, Forest Service shall evaluate such occurrences and document any findings. The current status of any adjustment shall be available to Purchaser on request. Promptly after the end of Normal Operating Season in which qualifying days occur, Forest Service shall give Purchaser written notice of (a) number of qualifying days claimed, and (b) new construction completion dates. After all road construction is complete, Forest Service shall grant Contract Term Adjustment. Such adjustment shall be limited to road completion date delays that occurred during Normal Operating Season.

If Forest Service is responsible for road construction and the actual date of road completion is 1 year or more after the completion date stated above, Purchaser may request a rate redetermination under B3.3 for remaining volume. Such request must be made within 30 days of notification that road construction has been completed. Upon receipt of such request, Forest Service shall redetermine rates using standard methods in effect on the completion date of road construction. Rates to be established shall apply to all timber removed from Sale Area after the effective date of the rate redetermination.

Forest Service shall in no way be responsible for any delay or damage caused by road contractor in performing the road construction, except such delay as may be the fault or negligence of Forest Service.

When Purchaser constructs Specified Roads and requests Contract Term Adjustment, completion dates shall be adjusted by number of days that qualify for such adjustment, provided such qualifying days occur before specified construction completion date. When Purchaser desires to construct an alternate facility under B5.26, Forest Service and Purchaser shall agree, in writing, on a construction completion date for alternate facility. Contract Term Adjustment as noted above will apply. Completion date shall be adjusted where a Design Change or physical changes necessitate a modification of Specified Road construction work that increases the scope or magnitude of the required work.

If Purchaser fails to complete construction of any or all Specified Roads by applicable completion date, as adjusted, Contract Term Extension shall not be granted.

As used in this Subsection, construction of a road is completed when:

(a) Purchaser constructs Specified Roads and Forest Service furnishes Purchaser with written notice of acceptance under B6.36 or

(b) Forest Service constructs road and furnishes Purchaser with written notice authorizing use of road.

Notwithstanding B5.1, Purchaser shall not use a road that Purchaser has elected for Forest Service to construct, until construction is completed and Forest Service furnishes Purchaser with written notice authorizing use of road.

C5.213# - DEPOSIT FOR RECONSTRUCTION ENGINEERING SERVICES *(04/2004)*

Purchaser shall make a cash deposit for engineering services (preconstruction and construction) provided by Forest Service for reconstruction of National Forest system roads necessary to accommodate Purchaser's use under this contract, pursuant to 16 USC 537.

The total amount to be deposited by Purchaser for reconstruction related engineering services to be completed by Forest Service personnel or by public works contract is $ **$14,955.16** . Purchaser shall make this deposit at the end of the first full Normal Operating Season or 12 months from contract award, whichever occurs first. In the event a different deposit schedule is agreed to, such deposit shall be due within 15 days after the date of issue indicated on the initial bill for collection, pursuant to B4.4.

The amount of the required deposit will be shown as an associated charge on Purchaser's Timber Sale Account. Forest Service shall retain any unexpended deposit for reconstruction related engineering services.

The deposit for reconstruction related engineering services shall be commensurate with project need and Purchaser's road use. Forest Service shall complete reconstruction related engineering services on the following schedule unless a different completion schedule is agreed in writing:

Road or Facility No.	**Termini From**	**To**	**Engineering Services Completion Date**
N/A			

Reconstruction related engineering services may consist of some or all of the engineering work and expense of: preparing, setting out, controlling, inspecting, and measuring the reconstruction of a National Forest system road.

C5.221# - MATERIAL SOURCES *(04/2004)*

Sources of local materials are designated on Drawings and Sale Area Map. Forest Service assumes responsibility for the quality and quantity of material in designated sources. Purchaser shall determine the equipment and work required to produce the specified product, including the selection of acceptable material that is reasonably available in the source that meets specifications. The designation of source includes the rights of Purchaser to use certain area(s) for plant site, stockpiles, and haul roads.

Should the designated source, due to causes beyond the control of Purchaser, contain insufficient acceptable material, Forest Service will provide another source with adjustment in accordance with B5.253.

When Purchaser elects not to use designated sources, Purchaser shall furnish the specified product with no adjustment in unit rates. Quality testing shall be the responsibility of Purchaser. Test results shall be furnished to Forest Service.

When Purchaser elects not to use designated sources and the Schedule of Items lists pit development separately, cost allowance will be reduced under B5.253 when Forest Service determines the work will not be required.

When materials are subject to a weight measurement, the specific gravity or weight/volume relationship used as a basis for determination of estimated quantities shall be:

Source I **NA**, Source II **NA**, and Source III **NA**.

Purchaser may, when agreed in writing, use on the project such suitable stone, gravel, and sand, or other material found in the excavation, and will earn a cost allowance for the excavation of such materials at the corresponding contract unit price and for the pay items for which the excavated material is used. Purchaser shall replace, without additional cost allowance, sufficient suitable materials to complete the portion of the work that was originally contemplated to be constructed with such material. Purchaser shall not excavate or remove any material, except that which is within the excavation limits, without written authori-zation from Forest Service.

When material is appraised from non-National Forest designated sources, owner charges for the material in terms of unit cost for royalties, purchase of raw materials, or finished products shall be as follows until **NA**:

See Material Source Table.

Should quantity vary from that estimated, payment to owners shall be for units actually obtained. Purchaser shall make arrangements with owner(s) for measurement and payment for royalties, purchase of raw materials, or finished products, as shown above.

Materials produced or processed from National Forest lands in excess of the quantities required for performance of this contract are the property of Forest Service, unless prior written agreement has been obtained to use excess material on other National Forest sales. Forest Service is not obligated to reimburse Purchaser for the cost of their production.

Materials shall be stored to assure the preservation of their quality and fitness for the work. Stored materials shall be located to facilitate their prompt inspection. Sites on Forest Service administered land, approved by Forest Service, may be used for storage purposes and for the placing of Purchaser's plant equipment. All storage sites provided by Forest Service shall be restored at Purchaser's expense. Purchaser

shall be responsible for making arrangements for storage on other than Forest Service administered lands.

When the construction of the portion of the project for which Temporary Roads used for hauling materials is completed, all such Temporary Roads shall be restored as nearly as practicable to their original ground profile, unless otherwise agreed in writing.

Sale Name: Hy Wah

C5.31# - ROAD MAINTENANCE REQUIREMENTS *(07/2001)*

Purchaser shall maintain roads in accordance with the following Contract Road Maintenance Requirements Summary:

See Contract Road Maintenance Requirements Summary Table.

Sale Name: Hy Wah

C5.32# - ROAD MAINTENANCE DEPOSIT SCHEDULE *(07/2001)*

Other provisions herein notwithstanding, when Forest Service requests payment in lieu of Purchaser's performance of road maintenance, Purchaser shall make Required Deposits (16 USC 537) for current and/or deferred road maintenance. Such deposits are based on the estimated volume and distance hauled and Purchaser's commensurate use of each road listed in the Road Maintenance Plan in C5.31#.

Purchaser and Forest Service may agree in writing on adjustment of such rates. If Purchaser uses roads under jurisdiction of Forest Service other than those listed in the Road Maintenance Plan, Forest Service shall establish rates commensurate with Purchaser's use of such roads.

The Required Deposits for Forest Service work in lieu of Purchaser performance and for deferred maintenance is: **$.41** per **Ton** .

The following table lists who Purchaser will make deposits for road maintenance to, and the rate per unit of measure of the deposit. The Road Maintenance Agreement is available for inspection at the Forest Supervisor's office.

Deposit Made To	Rate	Unit of Measure
N/A		

C6.315# - SALE OPERATION SCHEDULE *(06/1994)*

Unless otherwise agreed to between Purchaser and Forest Service, Purchaser's Operations shall be performed in accordance with the following schedule.

See attached schedule.

Sale Name: Hy Wah

C6.405 - ALTERNATE REMOVAL OF INCLUDED TIMBER *(05/2005)*

Purchaser and Forest Service may agree to alternate removal requirements of Included Timber contained in A2. Alternate removal requirements are to be set forth in an agreement signed by both Purchaser and Contracting Officer. The terms of the agreement binds both parties and becomes part of the timber sale contract.

The development and execution of the agreement is based upon the determination by the Contracting Officer that removal of Included Timber is economically impractical if Purchaser has no ready market for such logs in the tributary area. A tributary area is defined as the area in which the Purchaser and competitors regularly deliver saw logs, or 200 miles from the Sale Area, whichever distance is greater.

The agreement for alternate removal requirements shall be executed prior to removing any timber from the Subdivisions included in the agreement. Alternate removal requirements shall apply only to whole units and not to portions of units. All material meeting alternate removal specifications shall be cut and removed to locations designed in the agreement.

Volumes of material with alternate removal requirements will be determined from the National Cruise report for the sale. Purchaser will be charged for the following:

a) stumpage value at current contract rates of the alternatively removed timber;
b) plus the cost of other work required by the Forest Service to dispose of alternatively removed material;
c) plus the difference between the appraised transportation cost of the Sawtimber and/or Nonsawtimber material involved and the appraised transportation cost of the alternative.
d) Minus any work required to be completed by the Purchaser associated with alternate removal requirements.

Charges will be debited to the Purchaser's timber sale account.

Upon acceptance of the alternate removal requirements, the Subdivision will be removed from the Sale Area under B6.36.

Title to material included in the alternate removal agreement shall remain with the Forest Service.

C6.41# - SPECIFIC REQUIREMENTS *(01/2000)*

Notwithstanding B6.41, B6.411, B6.5 and B6.61, felling objectives shall be accomplished by the type of felling methods and equipment listed herein. Methods or equipment other than those specified may be approved. For Subdivisions shown in the following table, Purchaser shall submit a cutting plan for Forest Service acceptance, prior to the start of felling operations.

See attached table.

Sale Name: Hy Wah

C6.42# - YARDING/SKIDDING REQUIREMENTS *(04/2003)*

Purchaser shall submit for Forest Service approval a Yarding/Skidding Plan prior to the start of felling operations. Requirements other than those specified in the following table may be approved. When appropriate, such approval shall include adjustments in Current Contract Rates and revision of the Sale Area Map. In no such case shall the adjustments result in Current Contract Rates less than Base Rates.

Location of all skid roads and trails, tractor roads, skyline corridors, mechanized harvester trails, forwarder roads, and other log skidding facilities, shall be approved prior to their use or construction.

See attached table for requirements.

Sale Name: Hy Wah

C6.422 - CONSTRUCTED LANDINGS *(07/2001)*

In an effort to avoid irreparable soil and watershed damage, in areas on Sale Area Map designated "Landing Construction Critical", Purchaser shall construct landings in accordance with the following plans and specifications.

OLYMPIC NF LANDING CONSTRUCTION SPECIFICATIONS PURSUANT TO C6.422 - CONSTRUCTED LANDINGS (7/01)

CLEARING: Stumps and other vegetative material shall not be left hanging over the top of the excavated area. Clearing limits shall be marked on the ground and be approved by Forest Service.

DEBRIS DISPOSAL: All vegetative material at least 3 inches diameter and 3 feet long, which does not meet Utilization Standards in A2, shall be disposed of in accordance with C6.74#. This material may be scattered in the unit when agreed to by Forest Service.

EXCAVATION: Excavation will be by full bench construction unless prior written agreement is reached as to where excavated material may be used as fill material where it will hold on slopes up to 55%.

PROTECTION OF PERMANENT ROADS: When landings are located on system roads, Purchaser's landing construction activity will be designed to minimize damage to the road. After the landing has served Purchaser's purpose, the road will be returned to its original condition as soon as weather conditions permit.

EXCESS EXCAVATION DISPOSAL: Excavated material that is not utilized shall be hauled to a disposal site as designated by Forest Service. Excavated material shall be stockpiled at the disposal site. Excavated areas shall be backfilled with the stockpiled material when necessary to complete the work. Frozen material shall not be placed in embankments. Rocks which are too large to be incorporated in the embankment shall be broken as necessary for incorporation into the embankment; or maneuvered to the face of the embankment and embedded so that they will not roll, nor obstruct the use and maintenance of the roadbed; or move to approved locations.

ROCK SOURCE AND USE: Refer to C5.1# (Option 1).

C6.6# - EROSION CONTROL AND SOIL TREATMENT BY PURCHASER *(07/2001)*

Erosion prevention and control work required by B6.6, shall be completed within 15 calendar days after yarding/skidding operations related to each landing are substantially completed or after Forest Service designation on the ground of work where such designation is required hereunder. Said time limit shall be exclusive of full days lost in Purchaser's Operations due to causes beyond Purchaser's control. Such on the ground designation shall be done as promptly as feasible unless it is agreed that the location of such work can be established without marking on the ground. After September 15, and as long thereafter as operations continue, the work shall be done as promptly as practicable. Damage resulting from Purchaser's Operations due to failure to perform required work shall be repaired by Purchaser.

On slopes greater than **30** percent, erosion control measures will be done with methods other than mechanized equipment, unless otherwise agreed.

Where soil has been disturbed or displaced on Sale Area by Purchaser's Operations and where measures described in B6.6 will not result in satisfactory erosion control or where subsoiling is shown on Sale Area Map, the following shall be performed. If applicable, timing of the work shall be coordinated with required scarification or subsoiling.

(a) Where staked or otherwise marked on the ground by Forest Service, seed, fertilizer, and mulch will be applied as indicated below in the seeding, fertilizing, and mulching schedule. All applications shall be current and done during the period from **February 15** to **April 10 and September 1 to October 31** unless otherwise agreed to. Applications shall be done only during favorable conditions. If Purchaser and Forest Service agree, seed can be applied and covered within 10 days of ground disturbance, and may be done outside the required periods.

(b) Where shown on Sale Area Map, landings, Temporary Roads and/or skidtrails/roads shall be scarified to a depth of **6 inches plus the depth of the rut for skidtrails and 14 inches for landings and new temporary roads constructed by the purchaser** inches to provide a seedbed for grass seed, fertilizer, and mulch. Seed, fertilizer, and mulch shall be spread evenly at the rates shown in the table. When the seed, fertilizer, and mulch are applied in separate operations, the second or third operations shall be within 10 days of the first or second.

(c) Where shown on Sale Area Map, landings, Temporary Roads, and skid trails/roads used by Purchaser shall be subsoiled to a minimum depth of 20 inches, except that Forest Service may agree to lesser depths. Each subsoiler shank shall be equipped with a shoe and wings which has a total width of at least 18 inches. The design of the shank and wings will be such that the treated, compacted soil is slightly lifted and well-fractured rather than plowed, mixed, or displaced. The distance between subsoiler shank passes shall not exceed 36 inches. Treated areas shall span the total width of compaction. Subsoiling shall be kept reasonably current and shall be done during Normal Operating Season unless otherwise agreed.

(d) When agreed to, Purchaser may use alternate methods of erosion control.

Seed shall meet current Forest Service requirements, with the additional requirement that no seed containing any noxious weed seed in excess of established state limitations as listed in the current "State Noxious Weed Requirements Recognized in the Administration of the Federal Seed Act" publication will be used (commonly referred to as the "all states" noxious weed seed list). Seed shall be furnished separately or in mixture in standard containers clearly marked with: (1) seed name; (2) lot number; (3) net weight; (4) percentages of purity and of germination (in case of legumes, percentage of germination to include hard seed); (5) percentage of weed seed content; and (6) certification that no noxious weed seeds in excess of established state standards are present. The contractor shall furnish the Government duplicate signed copies of a certificate, signed by a Registered Seed Technologist or Seed Analyst (certified through either the Association of Official Seed Analysis or the Society of Commercial Seed Technologists), certifying that each lot of seed has been tested in accordance with the Association of Official Seed Analysts Standards within 12 months prior to date of application. This certificate shall include (1) name and address of

laboratory, (2) date of test, (3) lot number for each kind of seed, (4) name of seed, (5) percentage of germination, (6) percentage of purity, (7) percentage of weed seed content, and (8) certification that no noxious weed seeds in excess of established state limitations are present in any kind of seed.

Legume seed shall be inoculated with approved cultures in accordance with the instructions of the manufacturer.

No seed may be applied without prior written approval by the government.

See attached application schedule.

Sale Name: Hy Wah

C6.7 - SLASH DISPOSAL *(06/2008)*

As used in the following Subsections, the term "slash" is vegetative debris including, but not limited to, cull logs, blasted or pushed-out stumps, chunks, broken tops, limbs, branches, rotten wood, damaged brush, damaged or destroyed reproduction, saplings or poles, resulting from Purchaser's Operations.

Any burning of slash or refuse by Purchaser is subject to C7.201.

Forest Service may agree to substitute methods of slash disposal if such substitute methods will give equally satisfactory results.

Forest Service may waive specific slash treatment requirements. Purchaser's Timber Sale Account will be charged for any slash treatment requirements waived or for work taken over by Forest Service. The amount of such charges will be determined by Forest Service if Purchaser has not begun felling operations. If felling operations have begun, charges will be determined by mutual agreement.

Forest Service may enter into a written agreement with the Purchaser for the Purchaser to complete slash disposal work originally scheduled to be done by the Forest Service. The agreement will describe the work to be completed by the Purchaser, and the value of such work. Value of the work to be done will be based upon the slash disposal plan in which the cooperative deposits were calculated, and will include Forest Service overhead. Any deposits paid by the Purchaser for this work will be credited to the Purchaser's timber sale account. This work is in addition to that required by C6.74#.

Forest Service may also enter into a written agreement with Purchaser for the Purchaser to remove slash from landings, subject to B3.41. Brush disposal deposits paid by the Purchaser for the Forest Service to burn landing piles will be credited to the Purchaser's timber sale account in the amount shown in the brush disposal plan, less the amount needed by the Forest Service for final cleanup of the landings following removal of the landing slash piles by the Purchaser. The credit will be made following the final removal by the Purchaser of all Included Timber, and slash piles, from the Sale Area.

C6.74# - SLASH TREATMENT REQUIREMENTS *(02/2002)*

Purchaser shall pile, burn, yard, construct firelines or otherwise treat slash defined in C6.7, within designated areas. Work required of Purchaser shall be in accordance with the attached slash plan, specifications, and Sale Area Map.

Unless otherwise agreed, or shown in the attached slash plan or specifications, when Included Timber is removed during Normal Operating Season, required slash work shall be completed within 30 days of removal of approximately three-quarters of the volume in the unit. When Included Timber is removed outside Normal Operating Season, required work will be completed within 30 days of the beginning of the next Normal Operating Season.

See attached specifications.

Sale Name: Hy Wah

C6.815 - THIRD PARTY SCALING SERVICES *(04/2004)*

Notwithstanding the requirement for Forest Service or parties under contract to Forest Service to provide Scaling services under B6.81, Scaling designated in A10 shall be conducted by a third party Scaling organization approved by Forest Service. Scaling shall be done in accordance with A9 and Purchaser shall bear costs for Scaling service.

In the event third party Scaling service is suspended for causes such as strikes, termination of third party's approval to Scale National Forest logs by Forest Service, or Purchaser's failure to pay third party Scaling costs, hauling operations shall be suspended until agreed alternate Scaling services are provided or service by third party is resumed.

When an approved alternate Scaling location pursuant to B6.811 does not have an approved third party scaling organization as a commonly used Scaling services provider, Forest Service or parties under contract to Forest Service shall provide Scaling services at the approved alternate location. In such an event, the cost of waived third party Scaling listed in A10 shall be charged to Timber Sale Account.

If Forest Service and Purchaser agree in writing that another party under contract to Forest Service will perform Scaling, the contract will be modified to include C6.816 and Timber Sale Account will be charged for such Scaling.

C6.84 (OPTION 1) - USE OF PAINT BY PURCHASER *(05/2005)*

Notwithstanding B6.842, use of paint by the Purchaser within the Sale Area in the color(s) used by the Forest Service in the preparation of the sale and administration of the contract will be by written approval of the Forest Service.

C7.1 - PLANS *(09/2004)*

The plan shall state how Purchaser's representative or alternates will be contacted in a fire emergency, both during periods of operation and at other times such as evenings or weekends. Purchaser shall certify compliance with specific fire precautionary measures included as Subsections under C7.2 - Specific Fire Precautions, before beginning operations during Fire Precautionary Period (closed season) and shall update such certification when operations change.

If helicopter yarding is required, the plan shall include a schedule of rates mutually agreed to for computing Purchaser costs incurred toward meeting Purchaser's obligations under A14, or for paying for helicopters controlled by Purchaser and used under Forest Service direction for suppressing Operations Fires or other fires on Sale Area, excluding Negligent Fires.

C7.2 - SPECIFIC FIRE PRECAUTIONS *(09/2002)*

When the industrial fire precautions level is I or higher, unless waiver is granted under C7.22, specific required fire precautionary measures are as follows:

A. Fire Security.

Purchaser will designate in writing a person or persons who shall perform fire security services listed below on Sale Area and vicinity. The designated person will be capable of operating Purchaser's communications and fire fighting equipment specified in the contract, excluding helicopters, and of directing the activities of Purchaser's personnel on Forest fires. Such person must report any fire detected to Forest Service within 15 minutes of detection. In lieu of having the designated person perform the required supervisory duties, Purchaser may provide another person meeting the qualifications stated above to direct the activities of Purchaser's personnel and equipment during all fire fighting activities.

Services described shall be for at least 1 hour from the time Purchaser's Operations are shut down. For the purposes of this provision, personnel servicing equipment, and their vehicles, who are not engaged in cutting or welding metal are excluded.

Fire security services shall consist of moving throughout the operation area or areas constantly looking, reporting, and taking suppression action on any fires detected. Where possible, the designated person shall observe inaccessible portions of helicopter operating areas from vantage points within or adjacent to Sale Area.

Purchaser shall furnish fire security services based on the predicted industrial precaution level, obtained by Purchaser from the appropriate Ranger District Headquarters. If predictions made after 6:00 p.m. local time, are significantly different than originally estimated, Forest Service will inform Purchaser when changes in fire security services are indicated.

B. Fire Extinguisher and Equipment (on Trucks, Tractors, Power Saws, etc.).

(a) Each yarder or loader equipped with an internal combustion engine or other spark emitting source shall be equipped with a readily accessible fire extinguisher, with an Underwriter's Laboratory (UL) Rating of at least 5 B,C.

(b) All power-driven equipment operated by Purchaser on National Forest land, except portable fire pumps, shall be equipped with one fire extinguisher having a UL rating of at least 5 B,C and one "D" handled or long handled round point shovel, size O or larger. In addition, each motor patrol, truck and passenger-carrying vehicle shall be equipped with a double-bit axe or Pulaski, 3-1/2 pounds or larger.

(c) Equipment required in (a) and (b) shall be kept in a serviceable condition and shall be readily available.

(d) Each gasoline power saw operator shall be equipped with a pressurized chemical fire extinguisher of not less than 8-ounce capacity by weight, and one long handled round point shovel, size O or larger, except at a landing where a suitable fire extinguisher and shovel are immediately available. The extinguisher will be kept in possession of the saw operator at all times. The shovel shall be accessible to the operator within 1 minute.

(e) Each helicopter shall be equipped with one fire extinguisher having a UL rating of at least 5 B,C mounted inside the aircraft within reach of the pilot's operating position.

(f) One refill for each type or one extra extinguisher sufficient to replace each size extinguisher required on equipment shall be safely stored in the fire tool box or other agreed upon place on Sale Area that is protected and readily available.

(g) At each area where helicopters are being serviced or supplied, a carbon dioxide fire extinguisher with a UL rating of at least 20 B,C will be provided on the site and placed where it is available for immediate use.

C. Spark Arrestors and Mufflers.

Each internal combustion engine shall be equipped with a spark arrester qualified and rated under USDA Forest Service Standard 5100-la as shown in the National Wildfire Coordination Group Spark Arrester Guide, unless it is:

(a) Equipped with a turbine-driven exhaust supercharger such as the turbocharger. There shall be no exhaust bypass.

(b) A multi-position engine, such as on power saws which must meet the performance levels set forth in the Society of Automotive Engineers (SAE) "multi-positioned small engine exhaust fire ignition standard, SAE recommended practice J335B" as now or hereafter amended.

(c) A passenger carrying vehicle or light truck, or medium truck up to 40,000 GVW, used on roads and equipped with a factory designed muffler complete with baffles and an exhaust system in good working condition.

(d) A heavy duty truck, such as a dump or log truck, or other vehicle used for commercial hauling, used only on roads and equipped with a factory designed muffler and with a vertical stack exhaust system extending above the cab.

Exhaust equipment described in this Subsection, including spark arresters and mufflers, shall be properly installed and constantly maintained in serviceable condition.

D. Fire Tools.

Purchaser shall furnish serviceable fire fighting tools in a readily accessible fire tool box or compartment of sound construction with a hinged lid and hasp so arranged that the box can be secured or sealed. The box shall be red and marked "Fire Tools" in letters at least 1 inch high. It shall contain a minimum of:

(a) Two axes or Pulaskis with a 32 inch handle.

(b) Three adze eye hoes. One Pulaski may be substituted for one adze eye hoe.

(c) Three long handled, round point shovels, size 0 or larger.

E. Tank Truck.

Purchaser shall provide a tank truck or trailer, containing not less than 300 gallons of water, during yarding, skidding, loading, land clearing, right-of-way clearing, mechanical falling, and mechanical treatment of slash. Such tank truck or trailer shall be maintained in a serviceable condition and located within 10 minutes, round trip, from each operating side during Fire Precautionary Period (closed season), except as provided under B7.21.

The tank truck or trailer shall be equipped with a pump capable of discharging 20 gallons of water per minute, using a 1/4 inch nozzle tip, through a 50 foot length of poly or rubber lined hose. In addition, 500 feet of serviceable hard rubber poly or rubber lined or FJRL hose of not less than 1 inch outside diameter, fitted with a nozzle capable of discharging a straight stream of 1/4 inch diameter and a spray pattern shall be immediately available for use. The tank, pump, nozzle and at least 250 feet, of the total 500 feet of hose, shall be connected and ready for use at all times. Synthetic hose may be used by

agreement.

If a trailer is used, it shall be equipped with a hitch to facilitate prompt movement. A serviceable tow vehicle shall be immediately available for attachment to the trailer and must meet the time requirements stated above. Such truck or trailer shall be equipped to operate for a minimum of 8 hours.

Where designated on Sale Area Map, Purchaser shall provide a tank trailer or water source and pumping equipment, including accessories, which can be lifted and transported by the yarding system. The component parts shall meet all specifications above. The tank trailer or water supply and pumping accessories shall be deliverable to a fire, in area of operations, within 15 minutes of detection.

In lieu of the above tank trailer or water supply for helicopter operations, Purchaser may provide a suitable helicopter water bucket with a 300 gallon capacity. When Purchaser provides a water bucket, a water source shall be provided within 5 minutes round trip flight time from operating side.

F. Communications.

During Purchaser's Operations, excluding powersaw falling and bucking, Purchaser shall provide adequate two-way communication facilities to report a fire to Forest Service within 15 minutes of detection. Citizen Band radios (CB's) are not considered adequate two-way communications because FCC Regulations prohibit commercial use.

G. Smoking and Open Fire Restrictions.

Smoking and fires shall be permitted only at the option of Purchaser. Purchaser shall not permit open fires on Sale Area without advance permission in writing from Forest Service.

H. Blasting.

Blasting shall be permitted only for road construction purposes unless advance permission is obtained from Forest Service.

Whenever the Industrial Fire Precaution Level is II or greater, a fire security person equipped with a long handled round point No. 0 or larger shovel and a 5 gallon backpack pump can filled with water, will stay at location of blast for 1 hour after blasting is done. Blasting may be suspended by Forest Service, in areas of high rate of spread and resistance to control.

Fuses shall not be used for blasting. Explosive cords shall not be used without permission of Forest Service, which may specify conditions under which such explosives may be used and precautions to be taken.

I. Compliance with State Fire Laws.

Listing of specific fire precautionary measures in the foregoing Subsections is not intended to relieve Purchaser in any way from compliance with State fire laws covering fire prevention and suppression equipment, applicable to Purchaser's Operations.

J. Aircraft Communications.

Every aircraft used in conjunction with Purchaser's Operations shall be equipped with an operable radio system. The radio system shall be capable of transmitting and receiving on VHF frequency 122.85 Megahertz (MHz) with a minimum output of 5 watts at the transmitter. The system shall be located and installed so that the pilot can operate it while flying. A shielded all-weather broad-band antenna shall be part of the system. Radio and antenna shall be properly installed and maintained.

Upon discovery or notification of a fire on Sale Area, all aircraft pilots controlled by Purchaser shall

monitor VHF frequency 122.85 MHz when within 5 miles of a fire and broadcast their intentions.

K. Logging Block Equipment.

Purchaser shall provide a serviceable 5 gallon backpack pump full of water, one axe, and one long handled round point shovel, size 0 or larger, at each haulback block through which a running line passes.

The area below such blocks must be kept clear of all flammable debris under 4 inches in diameter for a distance of 6 feet in all directions. Material larger than 4 inches that poses a fire risk, such as punky logs, must also be removed.

Purchaser shall avoid line-rub on rocks or woody material which may result in sparks or sufficient heat to cause ignition of fire.

C7.201 - BURNING BY PURCHASER *(01/1993)*

Notwithstanding the Fire Precautionary Period limitation of B7.2, Purchaser is required to obtain written permission from Forest Service prior to any burning on the National Forest Lands.

C7.22 - EMERGENCY FIRE PRECAUTIONS *(09/2004)*

Purchaser shall restrict operations in accordance with the Industrial Fire Precaution Levels attached. Forest Service may change the Industrial Fire Precaution Levels to other values upon revision of the National Fire Danger Rating System and may change the specific Industrial Fire Precaution Levels when such changes are necessary for the protection of the National Forest. When sent to Purchaser, the revised Industrial Fire Precaution Levels will supersede the attached levels.

INDUSTRIAL FIRE PRECAUTIONS SCHEDULE

LEVEL INDUSTRIAL FIRE PRECAUTION

I. Closed Season - Fire precaution requirements are in effect. A Fire Watch/Fire Security is required at this and all higher levels unless otherwise waived.

II. Partial Hootowl - The following may operate only between The hours of 8 p.m. and 1 p.m. local time:

power saws, except at loading sites;
cable yarding;
blasting;
welding or cutting of metal.

III. Partial shutdown - The following are prohibited:

cable yarding - except that gravity operated logging systems employing non-motorized carriages may be operated between the hours of 8 p.m. and 1 p.m. local time when all blocks and moving lines are 10 feet or more above the ground, excluding the line between the carriage and the choker.

power saws - except at loading sites and on tractor/skidder operations between the hours of 8 p.m. and 1 p.m. local time.

In addition, the following are permitted between the hours of 8 p.m. and 1 p.m. local time:

tractor, skidder, feller-buncher, forwarder, or shovel logging operations where tractors, skidders or other equipment with a blade capable of constructing fireline are immediately available to quickly reach and effectively attack a fire start;
mechanized loading and hauling;
blasting;
welding or cutting of metal;
any other spark-emitting operation not specifically mentioned.

IV. General shutdown - All operations are prohibited.

The following definitions shall apply to these Industrial Fire Precaution Levels:

Cable yarding systems: A yarding system employing cables and winches in a fixed position.

Closed Season (Fire Precautionary Period): That time period each year when a fire hazard exists as

described in A12.

Hauling: Where hauling involves transit through more than one shutdown zone/regulated use area, the precaution level at the woods site shall govern the level of haul restrictions, unless prohibited by other than the Industrial Fire Precaution Level system.

Loading sites/woods site: A place where any product or material (including but not limited to logs, firewood, slash, soil, rock, poles, posts, etc.) is placed in or upon a truck or other vehicle.

Advance written waiver of the above precautions may be issued by the Contracting Officer or Forest Service Representative.

Such waiver, or substitute precautions under B7.21, shall prescribe measures to be taken by Purchaser to reduce the risk of ignition, and/or the spread of fire. The Contracting Officer or Forest Service Representative shall consider site specific weather factors, fuel conditions, and specific operations that result in less risk of fire ignition and/or spread than contemplated when precaution level was predicted. Consideration shall also be given to measures that reduce the precaution levels above. Purchaser shall assure that all conditions of such waivers or substitute precautions are met.

Purchaser shall obtain the predicted Industrial Fire Precaution Level from the appropriate Ranger District headquarters. If predictions made after 6:00 p.m., local time, are significantly different than originally estimated, Forest Service will inform Purchaser when changes in restrictions or industrial precautions are indicated.

C8.13 - DISCLAIMER OF EXPRESSED OR IMPLIED WARRANTY *(09/2004)*

Purchaser and Forest Service hereby agree, acknowledge, and accept that there is no expressed or implied warranty provided by the Forest Service that guarantees the Purchaser will be allowed to complete the removal of products sold under the terms of the contract. Upon execution of the contract, Purchaser hereby acknowledges the acceptance of the risk that this contract is subject to interruption or termination as a result of litigation associated with the environmental analysis process used by the Forest Service in the planning of this timber sale. If such interruption or termination occurs due to litigation, Purchaser agrees to accept as full compensation for such interruption remedies pursuant to B8.33, or for termination remedies pursuant to B8.34.

C8.212 - MARKET-RELATED CONTRACT TERM ADDITION *(11/2008)*

The term of this contract may be adjusted when a drastic reduction in wood product prices has occurred in accordance with 36 CFR 223.52. The Producer Price Index used to determine when a drastic reduction in price has occurred is stated in A20. Purchaser will be notified whenever the Chief determines that a drastic reduction in wood product prices has occurred. If the drastic reduction criteria specified in 36 CFR 223.52 are met for 2 consecutive calendar quarters, after contract award date, Contracting Officer will add 1 year to the contract term, upon Purchaser's written request. For each additional consecutive quarter such a drastic reduction occurs, Contracting Officer will, upon written request, add an additional 3 months to the term during Normal Operating Season, except that no single 3-month addition shall extend the term of the contract by more than one year. Contracting Officer must receive Purchaser's written request for a market-related contract term addition before the expiration of this contract.

No more than 3 years shall be added to a contract's term by market-related contract term addition unless the following conditions are met:

(i) The sale was awarded after December 31, 2006; and

(ii) A drastic reduction in wood product prices occurred in at least ten of twelve consecutive quarters during the contract term, but not including the quarter in which the contract was awarded.

For each qualifying quarter meeting the criteria in paragraphs (i) and (ii) of this provision, the Forest Service will, upon the Purchaser's written request, add an additional 3 months during the normal operating season to the contract, except no single 3-month addition shall extend the term of a contract by more than 1 year.

In no event shall a revised contract term exceed 10 years as a result of market-related contract term addition.

Additional contract time may not be granted for those portions of the contract that have a required completion date or for those portions of the contract where Contracting Officer determines that the timber is in need of urgent removal or that timber deterioration or resource damage may result from delay.

C8.3# (OPTION 1) - CONTRACT CHANGES *(06/2004)*

Contract changes involving volumes and/or values will use a weightratio of **3.1119** to convert net CCF cruise volumes to TONS.

C8.66# (Option 1) - USE OF TIMBER *(04/2004)*

(a) This contract is subject to the Forest Resources Conservation and Shortage Relief Act of 1990, as amended (16 USC 620, et seq.).

(b) Except for **Alaska Yellow Cedar** determined pursuant to public hearing to be surplus, unprocessed Included Timber shall not be exported from the United States nor used in direct or indirect substitution for unprocessed timber exported from private lands by Purchaser or any person as defined in the Act (16 USC 620e).

(c) Timber in the following form will be considered unprocessed:

(i) Trees or portions of trees or other roundwood not processed to standards and specifications suitable for end product use;

(ii) Lumber, construction timbers, or cants intended for remanufacturing not meeting standards defined in the Act (16 USC 620e); and

(iii) Aspen or other pulpwood bolts exceeding 100 inches in length.

(d) Unless otherwise agreed in writing, unprocessed Included Timber shall be delivered to a domestic processing facility and shall not be mixed with logs intended for export.

(e) Prior to award, during the life of this contract, and for a period of 3 years from Termination Date, Purchaser shall furnish to Forest Service, upon request, records showing the volume and geographic origin of unprocessed timber from private lands exported or sold for export by Purchaser or affiliates.

(f) Prior to delivering unprocessed Included Timber to another party, Purchaser shall require each buyer, exchangee, or recipient to execute an acceptable agreement that will:

(i) Identify the Federal origin of the timber;

(ii) Specify domestic processing for the timber involved;

(iii) Require the execution of such agreements between the parties to any subsequent transactions involving the timber;

(iv) Require that all hammer brands and/or yellow paint must remain on logs until they are either legally exported or domestically processed, whichever is applicable; and

(v) Otherwise comply with the requirements of the Act (16 USC 620d).

(g) No later than 10 days following the execution of any such agreement between Purchaser and another party, Purchaser shall furnish to Forest Service a copy of each such agreement. Purchaser shall retain, for 3 years from Termination Date, the records of all sales, exchanges, or dispositions of all Included Timber.

(h) Upon request, all records dealing with origin and disposition of Included Timber shall be made available to Contracting Officer.

(i) For breach of this Section, Forest Service may terminate this contract and take such other ac-tion as may be provided by statute or regulation, including the imposition of penalties. When terminated by Forest Service under this Section, Forest Service will not be liable for any Claim submitted by Purchaser relating to the termination.