# UNITED STATES DEPARTMENT OF AGRICULTURE
# FOREST SERVICE

PACIFIC NORTHWEST REGION

ROGUE RIVER–SISKIYOU NATIONAL FOREST

GOLD BEACH RANGER DISTRICT

PLANS FOR PROPOSED

# TOOTH TIMBER SALE

| | |
|---|---|
| DESIGNED BY: Lola Coombe<br>PROJECT DESIGNER | 6/24/13<br>Date |
| REVIEWED BY: Paul Podesta<br>REVIEWER | 6/24/13<br>Date |
| RECOMMENDED BY: Peggy (Morgan) O'Keefe<br>ASSISTANT FOREST ENGINEER | 7/8/13<br>Date |
| APPROVED BY:<br>DISTRICT RANGER | 7/16/2013<br>Date |
| APPROVED BY: Rory Bergstrom<br>REHLM STAFF OFFICER | 7-16-13<br>Date |

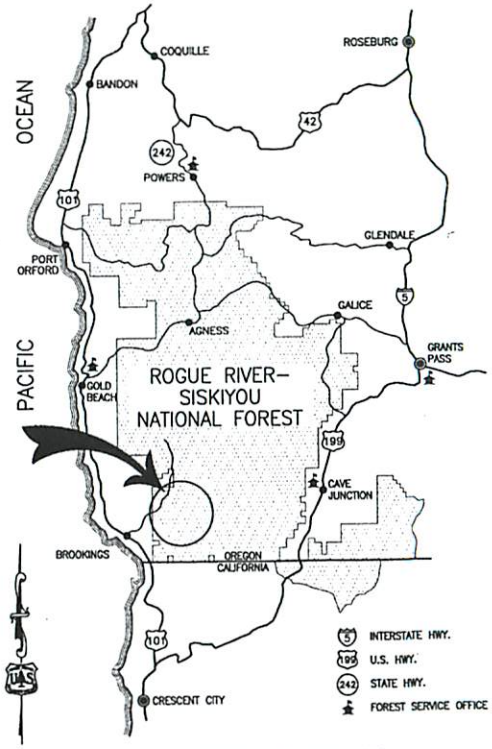


PROJECT LOCATION MAP
Not to Scale

| | | | | |
|---|---|---|---|---|
| U.S. DEPARTMENT OF AGRICULTURE<br>FOREST SERVICE<br>R6<br>PACIFIC NORTHWEST REGION | Forest<br>ROGUE RIVER-SISKIYOU NATIONAL FOREST<br>GOLD BEACH | Design: Lola Coombe<br>Drawn: Lola Coombe<br>Checked: P. Podesta<br>Date: June 2013 | Sheet Title:<br>COVER SHEET<br>TOOTH TIMBER SALE | Project No:<br>Sheet 1 OF 22 |

| INDEX TO SHEETS | |
|---|---|
| NO. | DESCRIPTION |
| 1 | COVER SHEET |
| 2 | INDEX TO SHEETS |
| 3 | PROJECT MAP |
| 4 | ESTIMATED QUANTITIES |
| 5 | PAY ITEM GENERAL NOTES, 1 OF 2 |
| 6 | PAY ITEM GENERAL NOTES, 2 OF 2 |
| 7 | DRAINAGE LISTING |
| 8 | FSR 1107000a WORK LIST & ESTIMATED QUANTITIES |
| 9 | FSR 1107000b WORK LIST & ESTIMATED QUANTITIES |
| 10 | FSR 1376000 WORK LIST & ESTIMATED QUANTITIES |
| 11 | FSR 1983000 WORK LIST & ESTIMATED QUANTITIES |
| 12 | FSR 1107000a MP 10.68, GRADE DIP |

| INDEX TO SHEETS, CONTINUED | |
|---|---|
| NO. | DESCRIPTION |
| 13 | FSR 1107000a MP 11.20 REALIGNMENT, DISPOSAL SITES |
| 14 | FSR 1107000b CULVERT CROSS SECTIONS MP 30.33, MP 30.34 & MP 30.46 |
| 15 | SEDIMENT CONTROL |
| 16 | COUPLING BANDS FOR METAL PIPE CULVERT |
| 17 | CULVERT INSTALLATION & BEDDING |
| 18 | CULVERT CATCH BASIN & OUTLET DITCH |
| 19 | CULVERT OUTLET RIPRAP PROTECTION |
| 20 | CULVERT DOWN DRAIN WITH ANCHOR ASSEMBLY |
| 21 | TEMPORARY TRAFFIC CONTROL – POST DETAIL |
| 22 | TEMPORARY TRAFFIC CONTROL – SINGLE LANE CLOSURE LAYOUT |

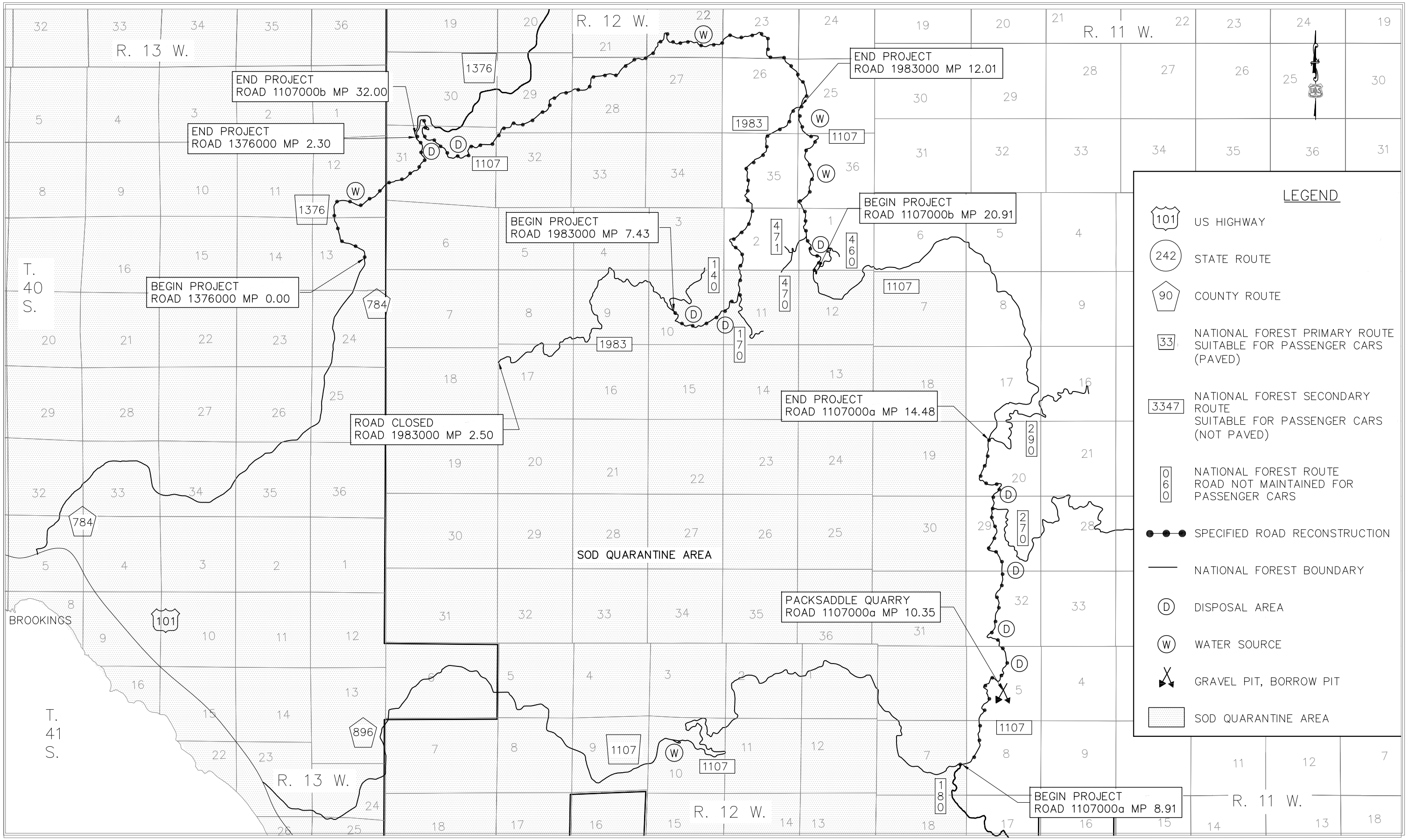


U.S. DEPARTMENT OF AGRICULTURE
FOREST SERVICE
R6
PACIFIC NORTHWEST REGION

Forest
ROGUE RIVER-SISKIYOU NATIONAL FOREST
GOLD BEACH

Design: Lola Coombe
Drawn: Lola Coombe
Checked: P. Podesta
Date: June 2013

Sheet Title:
# PROJECT MAP
TOOTH TIMBER SALE

Project No:

Sheet 3 OF 22

# TOOTH TIMBER SALE

## ESTIMATED QUANTITIES

| FP-03 Pay Items | Mobilization | Soil erosion and pollution control | Clearing and grubbing, disposal of tops and limbs (g), logs (i), stumps (f) | Removal of individual trees, disposal of tops and limbs (g), logs (i), stumps (f) | Removal of culvert, disposal method (A) | Cutting and removal of culvert, disposal method (A) | Unclassified borrow (commercial) | Waste, roadway excavation | Drainage excavation, type ditch | Drainage excavation, type grade dip | Earthwork geotextile type IV-C | Keyed riprap, class 3 (commercial source) | Keyed riprap, class 3 (Packsaddle quarry) | Roadway aggregate, compaction method 1, (Compaction B) | Pit run maximum size 3", compaction method B (Packsaddle quarry) | Skin patch hot asphalt concrete mixture | 24-inch aluminized corrugated steel pipe, 16 gage, compaction method B, 0-4' deep @ roadway centerline | 24-inch aluminized corrugated steel pipe, 16 gage, compaction method B, 4'-10' deep @ roadway centerline | 24-inch aluminized corrugated steel pipe, 16 gage, compaction method B, 10'-20' deep @ roadway centerline | 24-inch aluminized corrugated steel pipe, 16 gage, outlet pipe | 30-inch aluminized corrugated steel pipe, 12 gage, compaction method B, 10'-20' deep @ roadway centerline | 30-inch aluminized corrugated steel pipe, 16 gage, outlet pipe | 36-inch aluminized corrugated steel pipe, 12 gage, compaction method B, 20'-30' deep @ roadway centerline | Spillway assembly, 24-inch, 16 gage | Spillway assembly, 30-inch, 16 gage | Spillway assembly, 36-inch, 16 gage | Pipe anchor assembly, 24-inch | Pipe anchor assembly, 30-inch | Pipe anchor assembly, 36-inch | Cleaning culverts in place | Reconditioning drainage structures | Seeding and mulching, dry method |
|---|---|---|---|---|---|---|---|---|---|---|---|---|---|---|---|---|---|---|---|---|---|---|---|---|---|---|---|---|---|---|---|---|---|
| Item Number: | 15101 | 15713 | 20102 | 20207 | 20301 | 20310 | 20404 | 20416 | 20419 | 20420 | 20701 | 25104a | 25104b | 30801 | 32222 | 43007 | 60201a | 60201b | 60201c | 60201d | 60201e | 60201f | 60201g | 60601a | 60601b | 60601c | 60603a | 60603b | 60603c | 60708 | 60710 | 62530 |
| Unit of Measure: | LSQ | LSQ | LSQ | EA | EA | EA | CY | CY | FT | EA | SY | CY | CY | CY | CY | TON | FT | FT | FT | FT | FT | FT | FT | EA | EA | EA | EA | EA | EA | EA | EA | LSQ |
| Contract Quantity | | | | | | | * | * | | | * | * | * | * | * | | | | | | | | | | | | | | | | | |
| Road Number | | | | | | | | | | | | | | | | | | | | | | | | | | | | | | | | |
| 1107000a | All | 0 | All | 7 | 1 | 2 | 0 | 75 | 20 | 1 | 45 | 0 | 29 | 89 | 14 | 0.0 | 0 | 40 | 0 | 0 | 0 | 0 | 0 | 0 | 0 | 0 | 0 | 0 | 0 | 0 | 2 | All |
| 1107000b | All | All | All | 1 | 11 | 0 | 10 | 4 | 0 | 0 | 218 | 80 | 0 | 125 | 0 | 0.0 | 32 | 296 | 70 | 20 | 116 | 26 | 80 | 1 | 2 | 1 | 3 | 6 | 2 | 2 | 0 | All |
| 1376000 | All | 0 | 0 | 0 | 0 | 0 | 0 | 0 | 0 | 0 | 0 | 0 | 0 | 0 | 0 | 30.0 | 0 | 0 | 0 | 0 | 0 | 0 | 0 | 0 | 0 | 0 | 0 | 0 | 0 | 0 | 0 | 0 |
| 1983000 | All | 0 | All | 0 | 2 | 0 | 0 | 0 | 20 | 0 | 30 | 8 | 0 | 2 | 0 | 0.0 | 68 | 0 | 0 | 0 | 0 | 0 | 0 | 1 | 0 | 0 | 2 | 0 | 0 | 0 | 0 | All |
| TOTAL FOR ALL ROAD | All | All | All | 8 | 14 | 2 | 10 | 79 | 40 | 1 | 293 | 88 | 29 | 216 | 14 | 30.0 | 100 | 336 | 70 | 20 | 116 | 26 | 80 | 2 | 2 | 1 | 5 | 6 | 2 | 2 | 2 | All |

U.S. DEPARTMENT OF AGRICULTURE
FOREST SERVICE
R6
PACIFIC NORTHWEST REGION

ROGUE RIVER-SISKIYOU
NATIONAL FOREST

GOLD BEACH DISTRICT

Design: Lola Coombe
Drawn: Lola Coombe
Checked: P. Podesta
Date: 6/2013

ESTIMATED QUANTITIES

TOOTH TIMBER SALE

| Sheet No. | Total Sheets |
|---|---|
| 4 | 22 |

| PAY ITEM NUMBER | PAY ITEM DESCRIPTION | PAY UNIT | NOTES |
|---|---|---|---|
| 15101 | MOBILIZATION | LUMP SUM | INDIRECT PAYMENT FOR TRAFFIC CONTROL AND EQUIPMENT WASHING |
| 15713 | SOIL EROSION AND POLLUTION CONTROL | LUMP SUM | SILT FENCE FOR CULVERTS AS NEEDED |
| 20102 | CLEARING AND GRUBBING, DISPOSAL OF TOPS AND LIMBS (G), LOGS (I), STUMPS (F) | LUMP SUM | G–CHIPPING/GRINDING, I–DECK, F–SCATTER, CLEARED TOPS AND LIMBS MAY BE PLACED ON FINISHED CULVERT SLOPES AS EROSION CONTROL |
| 20207 | REMOVAL OF INDIVIDUAL TREES, DISPOSAL OF TOPS AND LIMBS (G), LOGS (I), STUMPS (F) | EACH | G–CHIPPING/GRINDING, I–DECK, F–SCATTER, MISCELLANEOUS TREES MAY BE SCATTERED |
| 20301 | REMOVAL OF CULVERT, DISPOSAL METHOD (A) | EACH | LEGALLY DISPOSE OFF GOVERNMENT LAND |
| 20310 | CUTTING AND REMOVAL OF CULVERT, DISPOSAL METHOD (A) | EACH | LEGALLY DISPOSE OFF GOVERNMENT LAND |
| 20404 | UNCLASSIFIED BORROW (COMMERCIAL SOURCE) | * CUBIC YARD | |
| 20416 | WASTE, ROADWAY EXCAVATION | * CUBIC YARD | |
| 20419 | DRAINAGE EXCAVATION, TYPE DITCH | FOOT | |
| 20420 | DRAINAGE EXCAVATION, TYPE GRADE DIP | EACH | USE SUITABLE EXCAVATED MATERIAL FOR CONSTRUCTION OF GRADE AS BACKFILL IN CATCH BASIN AND TO BRING ROADWAY TO GRADE AFTER CULVERT EXCAVATION AND REMOVAL. DISPOSE OF WASTE AT MP 10.73. |
| 20701 | EARTHWORK GEOTEXTILE TYPE IV–C | * SQUARE YARD | |
| 25104A | KEYED RIPRAP, CLASS 3 (COMMERCIAL SOURCE) | * CUBIC YARD | INDIRECT PAYMENT FOR EXCAVATION |
| 25104B | KEYED RIPRAP, CLASS 3, PACKSADDLE QUARRY | * CUBIC YARD | PACKSADDLE QUARRY, FSR 1107000a, MP 10.34, INDIRECT PAYMENT FOR EXCAVATION |
| 30801 | ROADWAY AGGREGATE, COMPACTION METHOD 1 (COMPACTION B), (COMMERCIAL SOURCE) | * CUBIC YARD | QUANTITY IS COMPACTED IN PLACE |
| 32222 | PIT RUN MAXIMUM SIZE 3", COMPACTION METHOD (B) (PACKSADDLE QUARRY) | * CUBIC YARD | QUANTITY IS COMPACTED IN PLACE, PACKSADDLE QUARRY, FSR 1107000a, MP 10.34 |
| 43007 | SKIN PATCH HOT ASPHALT CONCRETE MIXTURE | TON | INDIRECT PAYMENT FOR TACK COAT |
| 60201A | 24–INCH ALUMINIZED CORRUGATED STEEL PIPE, 16 GAGE, COMPACTION METHOD B, 0'–4' DEEP @ ROADWAY CENTERLINE | FOOT | INDIRECT PAYMENT FOR STAKING, EXCAVATION, BACKFILL, BEDDING, BANDS AND HARDWARE, LENGTHS SHOWN ARE APPROXIMATE, STAKE AND MEASURE FOR APPROVAL PRIOR TO ORDERING |

* CONTRACT QUANTITIES

| PAY ITEM NUMBER | PAY ITEM DESCRIPTION | PAY UNIT | NOTES |
|---|---|---|---|
| 60201B | 24–INCH ALUMINIZED CORRUGATED STEEL PIPE, 16 GAGE, COMPACTION METHOD B, 4'–10' DEEP @ ROADWAY CENTERLINE | FOOT | INDIRECT PAYMENT FOR STAKING, EXCAVATION, CULVERT CUTTING AND CONCRETE PLUGS (WHERE REQUIRED), BACKFILL, BEDDING, BANDS AND HARDWARE, LENGTHS SHOWN ARE APPROXIMATE, STAKE AND MEASURE FOR APPROVAL PRIOR TO ORDERING |
| 60201C | 24–INCH ALUMINIZED CORRUGATED STEEL PIPE, 16 GAGE, COMPACTION METHOD B, 10'–20' DEEP @ ROADWAY CENTERLINE | FOOT | INDIRECT PAYMENT FOR STAKING, EXCAVATION, BACKFILL, BEDDING, BANDS AND HARDWARE, LENGTHS SHOWN ARE APPROXIMATE, STAKE AND MEASURE FOR APPROVAL PRIOR TO ORDERING |
| 60201D | 24–INCH ALUMINIZED CORRUGATED STEEL PIPE, 16 GAGE, OUTLET PIPE | FOOT | INDIRECT PAYMENT FOR STAKING, BANDS AND HARDWARE, LENGTHS SHOWN ARE APPROXIMATE, STAKE AND MEASURE FOR APPROVAL PRIOR TO ORDERING |
| 60201E | 30–INCH ALUMINIZED CORRUGATED STEEL PIPE, 12 GAGE, COMPACTION METHOD B, 10'–20' DEEP @ ROADWAY CENTERLINE | FOOT | INDIRECT PAYMENT FOR STAKING, EXCAVATION, CULVERT CUTTING AND CONCRETE PLUGS, BACKFILL, BEDDING, BANDS AND HARDWARE, LENGTHS SHOWN ARE APPROXIMATE, STAKE AND MEASURE FOR APPROVAL PRIOR TO ORDERING |
| 60201F | 30–INCH ALUMINIZED CORRUGATED STEEL PIPE, 16 GAGE, OUTLET PIPE | FOOT | INDIRECT PAYMENT FOR STAKING, BANDS AND HARDWARE, LENGTHS SHOWN ARE APPROXIMATE, STAKE AND MEASURE FOR APPROVAL PRIOR TO ORDERING |
| 60201G | 36–INCH ALUMINIZED CORRUGATED STEEL PIPE, 12 GAGE, COMPACTION METHOD B, 20'–30' DEEP @ ROADWAY CENTERLINE | FOOT | INDIRECT PAYMENT FOR STAKING, EXCAVATION, CONCRETE PLUGS, BACKFILL, BEDDING, BANDS AND HARDWARE, LENGTHS SHOWN ARE APPROXIMATE, STAKE AND MEASURE FOR APPROVAL PRIOR TO ORDERING |
| 60601A | SPILLWAY ASSEMBLY, 24–INCH, 16 GAGE | EACH | HARDWARE IS INCIDENTAL, 20' LENGTH |
| 60601B | SPILLWAY ASSEMBLY, 30–INCH, 16 GAGE | EACH | HARDWARE IS INCIDENTAL, 20' LENGTH |
| 60601C | SPILLWAY ASSEMBLY, 36–INCH, 16 GAGE | EACH | HARDWARE IS INCIDENTAL, 20' LENGTH |
| 60603A | PIPE ANCHOR ASSEMBLY, 24–INCH | EACH | INDIRECT PAYMENT FOR HARDWARE AND CABLE |
| 60603B | PIPE ANCHOR ASSEMBLY, 30–INCH | EACH | INDIRECT PAYMENT FOR HARDWARE AND CABLE |
| 60603C | PIPE ANCHOR ASSEMBLY, 36–INCH | EACH | INDIRECT PAYMENT FOR HARDWARE AND CABLE |
| 60708 | CLEANING CULVERTS IN PLACE | EACH | CLEAN INLET AND OUTLET, MAY NEED TO JACK OPEN OR CUT INLET OR OUTLET |
| 60710 | RECONDITIONING DRAINAGE STRUCTURES | EACH | CLEAN ENTIRE LENGTH, RECONNECT SPILLWAY, OUTLET PIPE, AND PIPE ANCHOR ASSEMBLY |
| 62530 | SEEDING AND MULCHING, DRY METHOD | LUMP SUM | GOVERNMENT PROVIDED SEED |

* CONTRACT QUANTITIES

# DRAINAGE LISTING

| ROAD # | MILEPOST | DESIGNED CMP DIAMETER IN. | DESIGNED CMP LENGTH FT. | DESIGNED CMP GAGE | DESIGNED DOWN DRAIN DIAMETER IN. | DESIGNED DOWN DRAIN * LENGTH FT. | AS BUILT CMP DIAMETER IN. | AS BUILT CMP LENGTH FT. | AS BUILT CMP GAGE | AS BUILT DOWN DRAIN DIAMETER IN. | AS BUILT DOWN DRAIN LENGTH FT | INSTALLATION DETAILS TYPE | GRADE | ANCHOR ASSEMBLY EA. | DOWN DRAIN CONNECT HINGED | DOWN DRAIN CONNECT ELBOW | ** DEPTH OF EXCAVATION FT | OUTLET PROTECTION TYPE A RIPRAP CLASS 2 CY | TYPE A RIPRAP CLASS 3 CY | TYPE B RIPRAP CLASS 3 CY | TYPE B RIPRAP CLASS 6 | | | | | REMARKS |
|---|---|---|---|---|---|---|---|---|---|---|---|---|---|---|---|---|---|---|---|---|---|---|---|---|---|---|
| | | | | | | | | | | | | | | | | | | | | | | | | | | ALL CULVERTS: CULVERT LENGTHS SHOWN ARE APPROXIMATE, THE CONTRACTOR IS RESPONSIBLE FOR FIELD VERIFYING LENGTH AND SKEW ACCORDING TO FP-03 152.03(g). CONTRACTING OFFICER APPROVAL IS REQUIRED PRIOR TO PURCHASING CULVERT MATERIAL. |
| 1107000a | 13.05 | 24 | 40 | 16 | | | | | | | | 3 | 8% | | | | 4-10 | | 4 | | | | | | | NEW INSTALLATION, SKEW AS STAKED |
| | | | | | | | | | | | | | | | | | | | | | | | | | | |
| 1107000b | 21.13 | 24 | 40 | 16 | | | | | | | | 3 | 8% | | | | 4-10 | | 4 | | | | | | | NEW INSTALLATION, SKEW AS STAKED |
| | 24.24 | 24 | 38 | 16 | | | | | | | | 3 | MATCH | | | | 4-10 | | 4 | | | | | | | REMOVE AND DO NOT REPLACE DOWN DRAIN, INSTALL ENERGY DISSIPATOR |
| | 27.21 | 24 | 46 | 16 | | | | | | | | 3 | 8% | | | | 4-10 | | 4 | | | | | | | ADD 6' TO OUTLET, INCREASE GRADE TO 8% |
| | 28.47 | 24 | 46 | 16 | | | | | | | | 3 | MATCH | | | | 4-10 | | 4 | | | | | | | |
| | 28.92 | 24 | 38 | 16 | | | | | | | | 3 | MATCH | | | | 4-10 | | 4 | | | | | | | REMOVE AND DO NOT REPLACE DOWN DRAIN, INSTALL ENERGY DISSIPATOR |
| | 30.33 | 30 | 52 | 12 | 30 | 30 | | | | | | 2 | 8% | 3 | X | | 10-20 | | 22 | | | | | | | CUT AND PLUG EXISTING CULVERT, INSTALL NEW AT 8% WITH SPILLWAY ASSEMBLY AND 10' OUTLET PIPE, 16 GAGE |
| | 30.34 | 30 | 64 | 12 | 30 | 36 | | | | | | 2 | 8% | 3 | X | | 10-20 | | 8 | | | | | | | CUT AND PLUG EXISTING CULVERT, INSTALL NEW AT 8% WITH SPILLWAY ASSEMBLY AND 16' OUTLET PIPE, 16 GAGE |
| | 30.46 | 36 | 80 | 12 | 36 | 20 | | | | | | 2 | 8% | 2 | X | | 20-30 | | 11 | | | | | | | CUT AND PLUG EXISTING CULVERT, INSTALL NEW AT 8% WITH SPILLWAY ASSEMBLY, 16 GAGE |
| | 30.73 | 24 | 32 | 16 | 24 | 40 | | | | | | 2 | MATCH | 3 | X | | 0-4 | | 4 | | | | | | | |
| | 30.87 | 24 | 46 | 16 | | | | | | | | 3 | 8% | | | | 4-10 | | 4 | | | | | | | CUT AND PLUG EXISTING CULVERT, SKEW AS STAKED |
| | 31.04 | 24 | 42 | 16 | | | | | | | | 3 | MATCH | | | | 4-10 | | 4 | | | | | | | LENGTH OF EXISTING CULVERT INCREASED 2', TO BE ADDED TO CURRENT INLET LOCATION |
| | 31.22 | 24 | 70 | 16 | | | | | | | | 3 | MATCH | | | | 10-20 | | 4 | | | | | | | LENGTH OF EXISTING CULVERT INCREASED 8', TO BE ADDED TO CURRENT INLET LOCATION |
| | | | | | | | | | | | | | | | | | | | | | | | | | | |
| 1983000 | 7.77 | 24 | 34 | 16 | | | | | | | | 3 | MATCH | | | | 0-4 | | 4 | | | | | | | |
| | 8.28 | 24 | 34 | 16 | 24 | 20 | | | | | | 2 | MATCH | 2 | X | | 0-4 | | 4 | | | | | | | SPILLWAY ASSEMBLY ONLY FOR DOWN DRAIN |

METAL PIPE CORRUGATIONS SHALL BE 2 2/3" X 1/2" UNLESS OTHERWISE APPROVED.

ALUMINIZED STEEL SHALL BE USED.

* DOWN DRAIN LENGTH SHOWN ON THIS LISTING INCLUDES THE 20' SPILLWAY ASSEMBLY. FOR EXAMPLE: A 30 FOOT DOWN DRAIN PIPE CONSISTS OF A 20 FOOT SPILLWAY ASSEMBLY PLUS 10 FEET OF OUTLET PIPE.

** APPROXIMATE RANGE OF DEPTH OF CULVERT AT ROAD CENTERLINE GIVEN IN FEET. FOR EXAMPLE, 0-4 MEANS CULVERT IS BETWEEN 0 AND 4 FEET BELOW THE ROAD SURFACE AT ROAD CENTERLINE.

# FSR # 1107000a

## WORK LIST AND ESTIMATED QUANTITIES

| Mile Post Begin | Mile Post End | FP-03 Pay Items / Description of Work | Mobilization | Soil erosion and pollution control | Clearing and grubbing, disposal of tops and limbs (g), logs (i), stumps (f) | Removal of individual trees, disposal of tops and limbs (g), logs (i), stumps (f) | Removal of culvert, disposal method (A) | Cutting and removal of culvert, disposal method (A) | Unclassified borrow (commercial) | Waste, roadway excavation | Drainage excavation, type ditch | Drainage excavation, type grade dip | Earthwork geotextile type IV-C | Keyed riprap, class 3 (commercial source) | Keyed riprap, class 3 (Packsaddle quarry) | Roadway aggregate, compaction method 1, (Compaction B) | Pit run maximum size 3", compaction method B (Packsaddle quarry) | Skin patch hot asphalt concrete mixture | 24-inch aluminized corrugated steel pipe, 16 gage, compaction method B, 0-4' deep @ roadway centerline | 24-inch aluminized corrugated steel pipe, 16 gage, compaction method B, 4'-10' deep @ roadway centerline | 24-inch aluminized corrugated steel pipe, 16 gage, compaction method B, 10'-20' deep @ roadway centerline | 24-inch aluminized corrugated steel pipe, 16 gage, outlet pipe | 30-inch aluminized corrugated steel pipe, 12 gage, compaction method B, 10'-20' deep @ roadway centerline | 30-inch aluminized corrugated steel pipe, 16 gage, outlet pipe | 36-inch aluminized corrugated steel pipe, 12 gage, compaction method B, 20'-30' deep @ roadway centerline | Spillway assembly, 24-inch, 16 gage | Spillway assembly, 30-inch, 16 gage | Spillway assembly, 36-inch, 16 gage | Pipe anchor assembly, 24-inch | Pipe anchor assembly, 30-inch | Pipe anchor assembly, 36-inch | Cleaning culverts in place | Reconditioning drainage structures | Seeding and mulching, dry method |
|---|---|---|---|---|---|---|---|---|---|---|---|---|---|---|---|---|---|---|---|---|---|---|---|---|---|---|---|---|---|---|---|---|---|---|---|---|
| | | Item Number: | 15101 | 15713 | 20102 | 20207 | 20301 | 20310 | 20404 | 20416 | 20419 | 20420 | 20701 | 25104a | 25104b | 30801 | 32222 | 43007 | 60201a | 60201b | 60201c | 60201d | 60201e | 60201f | 60201g | 60601a | 60601b | 60601c | 60603a | 60603b | 60603c | 60708 | 60710 | 62530 |
| | | Unit of Measure: | LSQ | LSQ | LSQ | EA | EA | EA | CY | CY | FT | EA | SY | CY | CY | CY | CY | TON | FT | FT | FT | FT | FT | FT | FT | EA | EA | EA | EA | EA | EA | EA | EA | LSQ |
| | | Contract Quantity | | | | | | | * | * | | | * | * | * | * | * | | | | | | | | | | | | | | | | | |
| 8.91 | 14.48 | Begin Work: FSR 1107000a<br>Intersection with FSR 1107180 | 1 | | | | | | | | | | | | | | | | | | | | | | | | | | | | | | | |
| 10.68 | | Existing 18" culvert, separated<br>Remove culvert, install grade dip | | | 1 | | 1 | | | | | 1 | 30 | | 12 | 23 | 8 | | | | | | | | | | | | | | | | | 1 |
| 10.97 | | Existing 18" culvert, separated<br>Excavate and reconnect inlet section | | | | | | | | | | | | | | 2 | | | | | | | | | | | | | | | | | 1 | 1 |
| 11.20 | 11.22 | Realignment, move into cut bank approximately 7', see detail | | | 1 | | | | | 75 | | | | | | 11 | | | | | | | | | | | | | | | | | | 1 |
| 12.07 | | Existing 18" culvert, scour hole at outlet<br>Cut 2' from culvert at outlet, place riprap at outlet | | | | 4 | | 1 | | | | | | | 10 | | | | | | | | | | | | | | | | | | | |
| 12.76 | | Existing 18" culvert, scour hole at outlet<br>Cut 8' from culvert at outlet, place riprap at outlet | | | | 3 | | 1 | | | | | | | 3 | | | | | | | | | | | | | | | | | | | |
| 13.05 | | Install new 24" x 40' CMP, skew as staked, recondition ditch for 300' to drain to culvert | | | 1 | | | | | | | | 15 | | 4 | 6 | | | | 40 | | | | | | | | | | | | | | 1 |
| 13.17 | | Existing 18" CMP w/20' down drain, fill slope failure. Raise grade 1' with surface aggregate for 50', taper for 20', construct berm using pit run for 70' with outlet ditch | | | | | | | | | 20 | | | | | 47 | 6 | | | | | | | | | | | | | | | | 1 | |
| | 14.48 | End work: FSR 1107000a<br>Intersection 1107290 | | | | | | | | | | | | | | | | | | | | | | | | | | | | | | | | |
| TOTAL FOR ROAD | | | All | 0 | All | 7 | 1 | 2 | 0 | 75 | 20 | 1 | 45 | 0 | 29 | 89 | 14 | 0.0 | 0 | 40 | 0 | 0 | 0 | 0 | 0 | 0 | 0 | 0 | 0 | 0 | 0 | 0 | 2 | All |

| | | | |
|---|---|---|---|
| U.S. DEPARTMENT OF AGRICULTURE<br>FOREST SERVICE<br>R6<br>PACIFIC NORTHWEST REGION | ROGUE RIVER-SISKIYOU<br>NATIONAL FOREST<br>GOLD BEACH DISTRICT | Design: Lola Coombe<br>Drawn: Lola Coombe<br>Checked: P. Podesta<br>Date: 6/2013 | FSR 1107000a<br>WORK LIST & ESTIMATED QUANTITIES<br>TOOTH TIMBER SALE |

| Sheet No. | Total Sheets |
|---|---|
| 8 | 22 |

# FSR # 1107000b

## WORK LIST AND ESTIMATED QUANTITIES

| Mile Post Begin | Mile Post End | FP-03 Pay Items | Mobilization | Soil erosion and pollution control | Clearing and grubbing, disposal of tops and limbs (g), logs (i), stumps (f) | Removal of individual trees, disposal of tops and limbs (g), logs (i), stumps (f) | Removal of culvert, disposal method (A) | Cutting and removal of culvert, disposal method (A) | Unclassified borrow (commercial) | Waste, roadway excavation | Drainage excavation, type ditch | Drainage excavation, type grade dip | Earthwork geotextile type IV-C | Keyed riprap, class 3 (commercial source) | Keyed riprap, class 3 (Packsaddle quarry) | Roadway aggregate, compaction method 1, (Compaction B) | Pit run maximum size 3", compaction method B (Packsaddle quarry) | Skin patch hot asphalt concrete mixture | 24-inch aluminized corrugated steel pipe, 16 gage, compaction method B, 0-4' deep @ roadway centerline | 24-inch aluminized corrugated steel pipe, 16 gage, compaction method B, 4'-10' deep @ roadway centerline | 24-inch aluminized corrugated steel pipe, 16 gage, compaction method B, 10'-20' deep @ roadway centerline | 24-inch aluminized corrugated steel pipe, 16 gage, outlet pipe | 30-inch aluminized corrugated steel pipe, 12 gage, compaction method B, 10'-20' deep @ roadway centerline | 30-inch aluminized corrugated steel pipe, 16 gage, outlet pipe | 36-inch aluminized corrugated steel pipe, 12 gage, compaction method B, 20'-30' deep @ roadway centerline | Spillway assembly, 24-inch, 16 gage | Spillway assembly, 30-inch, 16 gage | Spillway assembly, 36-inch, 16 gage | Pipe anchor assembly, 24-inch | Pipe anchor assembly, 30-inch | Pipe anchor assembly, 36-inch | Cleaning culverts in place | Reconditioning drainage structures | Seeding and mulching, dry method |
|---|---|---|---|---|---|---|---|---|---|---|---|---|---|---|---|---|---|---|---|---|---|---|---|---|---|---|---|---|---|---|---|---|---|---|---|
| | | Item Number: | 15101 | 15713 | 20102 | 20207 | 20301 | 20310 | 20404 | 20416 | 20419 | 20420 | 20701 | 25104a | 25104b | 30801 | 32222 | 43007 | 60201a | 60201b | 60201c | 60201d | 60201e | 60201f | 60201g | 60601a | 60601b | 60601c | 60603a | 60603b | 60603c | 60708 | 60710 | 62530 |
| | | Unit of Measure: | LSQ | LSQ | LSQ | EA | EA | EA | CY | CY | FT | EA | SY | CY | CY | CY | CY | TON | FT | FT | FT | FT | FT | FT | FT | EA | EA | EA | EA | EA | EA | EA | EA | LSQ |
| | | Contract Quantity | | | | | | | * | * | | | * | * | * | * | * | | | | | | | | | | | | | | | | | |
| Begin | End | Description of Work | | | | | | | | | | | | | | | | | | | | | | | | | | | | | | | | |
| 20.91 | | Begin Work: FSR 1107000b Intersection with FSR 1107460 | 1 | | | | | | | | | | | | | | | | | | | | | | | | | | | | | | | |
| 21.13 | | Install new 24" x 40' CMP, skew as staked | | | 1 | | | | | 4 | | | 15 | 4 | | 6 | | | | 40 | | | | | | | | | | | | | | 1 |
| 24.24 | | Existing 18" culvert w/down, separated Replace with 24" x 38', do not replace down drain, install riprap energy dissipator | | | 1 | | 1 | | | | | | 15 | 4 | | 4 | | | | 38 | | | | | | | | | | | | | | 1 |
| 26.36 | | Existing 18" culvert Clean outlet (deep, flagged) | | | | | | | | | | | | | | | | | | | | | | | | | | | | | | 1 | | |
| 26.42 | | Existing 18" culvert Clear inlet, clean outlet (deep, flagged) | | | | | | | | | | | | | | | | | | | | | | | | | | | | | | 1 | | |
| 27.21 | | Existing 18" x 40' CMP Replace with 24" x 46' CMP, additional 6' at outlet, increase culvert slope to 8% | | | 1 | | 1 | | | | | | 15 | 4 | | 8 | | | | 46 | | | | | | | | | | | | | | 1 |
| 28.47 | | Existing 18" CMP Replace with 24" x 46' CMP | | | 1 | | 1 | | | | | | 15 | 4 | | 8 | | | | 46 | | | | | | | | | | | | | | 1 |
| 28.92 | | Existing 18" culvert w/down, separated Replace with 24"x 38', do not replace down drain, install energy dissipator | | | 1 | | 1 | | | | | | 15 | 4 | | 4 | | | | 38 | | | | | | | | | | | | | | 1 |
| 30.33 | | Existing 30"x 80' CMP, hazard tree Replace with 30" x 52' CMP @ 8% slope, w/30' down drain, cut and plug existing culvert, fill hole at separation with unclassified borrow, fill scour hole at outlet with riprap | | 1 | 1 | 1 | 1 | | 10 | | | | 22 | 22 | | 15 | | | | | | | 52 | 10 | | | 1 | | | 3 | | | | 1 |
| 30.34 | | Existing 30" x 100' CMP Replace with 30" x 64' CMP @ 8% slope, w/36' down drain, cut and plug existing culvert, decrease roadway superelevation by adding 1' aggregate surface course on inside of curve | | 1 | 1 | | 1 | | | | | | 22 | 8 | | 29 | | | | | | | 64 | 16 | | | 1 | | | 3 | | | | 1 |
| 30.46 | | Existing 30" x 100' CMP Replace with 36" x 80' CMP@ 8% slope, w/20' down drain, cut and plug existing culvert | | 1 | 1 | | 1 | | | | | | 28 | 11 | | 19 | | | | | | | | | 80 | | | 1 | | | 2 | | | 1 |
| 30.62 | | Exisitng 18" CMP Install energy dissipator | | | | | | | | | | | 11 | 3 | | | | | | | | | | | | | | | | | | | | 1 |
| 30.73 | | Existing 18" CMP, w/down Replace with 24" x 32' CMP w/40' down drain | | | 1 | | 1 | | | | | | 15 | 4 | | 1 | | | 32 | | | 20 | | | | 1 | | | 3 | | | | | 1 |
| 30.87 | | Existing 18", separating, buried inlet, Replace 24" x 46' CMP @ 8% slope, skew as staked, cut and plug existing | | | 1 | | 1 | | | | | | 15 | 4 | | 8 | | | | 46 | | | | | | | | | | | | | | 1 |
| 31.04 | | Existing 18" x 40' CMP Replace with 24" x 42' CMP, additional 2' at inlet | | | 1 | | 1 | | | | | | 15 | 4 | | 7 | | | | 42 | | | | | | | | | | | | | | 1 |
| 31.22 | | Existing 18" x 62' CMP Replace with 24" x 70' CMP, additional 8' at inlet | | | 1 | | 1 | | | | | | 15 | 4 | | 16 | | | | | 70 | | | | | | | | | | | | | 1 |
| | 32.00 | End work, FSR 1107000b Intersection with FSR 1376000 | | | | | | | | | | | | | | | | | | | | | | | | | | | | | | | | |
| TOTAL FOR ROAD | | | All | All | All | 1 | 11 | 0 | 10 | 4 | 0 | 0 | 218 | 80 | 0 | 125 | 0 | 0.0 | 32 | 296 | 70 | 20 | 116 | 26 | 80 | 1 | 2 | 1 | 3 | 6 | 2 | 2 | 0 | All |

| | | | |
|---|---|---|---|
| U.S. DEPARTMENT OF AGRICULTURE<br>FOREST SERVICE<br>R6<br>PACIFIC NORTHWEST REGION | ROGUE RIVER-SISKIYOU<br>NATIONAL FOREST<br>GOLD BEACH DISTRICT | Design: Lola Coombe<br>Drawn: Lola Coombe<br>Checked: P. Podesta<br>Date: 6/2013 | FSR 1107000b<br>WORK LIST & ESTIMATED QUANTITIES<br>TOOTH TIMBER SALE |

| Sheet No. | Total Sheets |
|---|---|
| 9 | 22 |

| FSR # 1376000 | | WORK LIST AND ESTIMATED QUANTITIES | | | | | | | | | | | | | | | | | | | | | | | | | | | | | | | | |
|---|---|---|---|---|---|---|---|---|---|---|---|---|---|---|---|---|---|---|---|---|---|---|---|---|---|---|---|---|---|---|---|---|---|---|
| | | FP-03 Pay Items | Mobilization | Soil erosion and pollution control | Clearing and grubbing, disposal of tops and limbs (g), logs (l), stumps (f) | Removal of individual trees, disposal of tops and limbs (g), logs (l), stumps (f) | Removal of culvert, disposal method (A) | Cutting and removal of culvert, disposal method (A) | Unclassified borrow (commercial) | Waste, roadway excavation | Drainage excavation, type ditch | Drainage excavation, type grade dip | Earthwork geotextile type IV-C | Keyed riprap, class 3 (commercial source) | Keyed riprap, class 3 (Packsaddle quarry) | Roadway aggregate, compaction method 1, (Compaction B) | Pit run maximum size 3", compaction method B (Packsaddle quarry) | Skin patch hot asphalt concrete mixture | 24-inch aluminized corrugated steel pipe, 16 gage, compaction method B, 0-4' deep @ roadway centerline | 24-inch aluminized corrugated steel pipe, 16 gage, compaction method B, 4'-10' deep @ roadway centerline | 24-inch aluminized corrugated steel pipe, 16 gage, compaction method B, 10'-20' deep @ roadway centerline | 24-inch aluminized corrugated steel pipe, 16 gage, outlet pipe | 30-inch aluminized corrugated steel pipe, 12 gage, compaction method B, 10'-20' deep @ roadway centerline | 30-inch aluminized corrugated steel pipe, 16 gage, outlet pipe | 36-inch aluminized corrugated steel pipe, 12 gage, compaction method B, 20'-30' deep @ roadway centerline | Spillway assembly, 24-inch, 16 gage | Spillway assembly, 30-inch, 16 gage | Spillway assembly, 36-inch, 16 gage | Pipe anchor assembly, 24-inch | Pipe anchor assembly, 30-inch | Pipe anchor assembly, 36-inch | Cleaning culverts in place | Reconditioning drainage structures | Seeding and mulching, dry method |
| **Mile Post** | | Item Number: | 15101 | 15713 | 20102 | 20207 | 20301 | 20310 | 20404 | 20416 | 20419 | 20420 | 20701 | 25104a | 25104b | 30801 | 32222 | 43007 | 60201a | 60201b | 60201c | 60201d | 60201e | 60201f | 60201g | 60601a | 60601b | 60601c | 60603a | 60603b | 60603c | 60708 | 60710 | 62530 |
| | | Unit of Measure: | LSQ | LSQ | LSQ | EA | EA | EA | CY | CY | FT | EA | SY | CY | CY | CY | CY | TON | FT | FT | FT | FT | FT | FT | FT | EA | EA | EA | EA | EA | EA | EA | EA | LSQ |
| | | Contract Quantity | | | | | | | * | * | | | * | * | * | * | * | | | | | | | | | | | | | | | | | |
| Begin | End | Description of Work | | | | | | | | | | | | | | | | | | | | | | | | | | | | | | | | |
| 0.00 | | Begin Work: FSR 1376000<br>End of Co. Rd. | 1 | | | | | | | | | | | | | | | | | | | | | | | | | | | | | | | |
| 0.00 | 2.30 | Skin patch areas as marked on ground by Forest Service, work includes tack coat | | | | | | | | | | | | | | | | 30.0 | | | | | | | | | | | | | | | | |
| | 2.30 | End Work<br>Intersection with FSR 1107000b, MP 32.00 | | | | | | | | | | | | | | | | | | | | | | | | | | | | | | | | |
| | | | | | | | | | | | | | | | | | | | | | | | | | | | | | | | | | | |
| | | | | | | | | | | | | | | | | | | | | | | | | | | | | | | | | | | |
| | | | | | | | | | | | | | | | | | | | | | | | | | | | | | | | | | | |
| TOTAL FOR ROAD | | | All | 0 | 0 | 0 | 0 | 0 | 0 | 0 | 0 | 0 | 0 | 0 | 0 | 0 | 0 | 30.0 | 0 | 0 | 0 | 0 | 0 | 0 | 0 | 0 | 0 | 0 | 0 | 0 | 0 | 0 | 0 | 0 |

U.S. DEPARTMENT OF AGRICULTURE
FOREST SERVICE
R6
PACIFIC NORTHWEST REGION

ROGUE RIVER-SISKIYOU
NATIONAL FOREST

GOLD BEACH DISTRICT

Design: Lola Coombe
Drawn: Lola Coombe
Checked: P. Podesta
Date: 6/2013

FSR 1376000
WORK LIST & ESTIMATED QUANTITIES

TOOTH TIMBER SALE

| Sheet No. | Total Sheets |
|---|---|
| 10 | 22 |

## FSR # 1983000

## WORK LIST AND ESTIMATED QUANTITIES

| Mile Post Begin | Mile Post End | FP-03 Pay Items | Mobilization | Soil erosion and pollution control | Clearing and grubbing, disposal of tops and limbs (g), logs (i), stumps (f) | Removal of individual trees, disposal of tops and limbs (g), logs (i), stumps (f) | Removal of culvert, disposal method (A) | Cutting and removal of culvert, disposal method (A) | Unclassified borrow (commercial) | Waste, roadway excavation | Drainage excavation, type ditch | Drainage excavation, type grade dip | Earthwork geotextile type IV-C | Keyed riprap, class 3 (commercial source) | Keyed riprap, class 3 (Packsaddle quarry) | Roadway aggregate, compaction method 1, (Compaction B) | Pit run maximum size 3", compaction method B (Packsaddle quarry) | Skin patch hot asphalt concrete mixture | 24-inch aluminized corrugated steel pipe, 16 gage, compaction method B, 0-4' deep @ roadway centerline | 24-inch aluminized corrugated steel pipe, 16 gage, compaction method B, 4'-10' deep @ roadway centerline | 24-inch aluminized corrugated steel pipe, 16 gage, compaction method B, 10'-20' deep @ roadway centerline | 24-inch aluminized corrugated steel pipe, 16 gage, outlet pipe | 30-inch aluminized corrugated steel pipe, 12 gage, compaction method B, 10'-20' deep @ roadway centerline | 30-inch aluminized corrugated steel pipe, 16 gage, outlet pipe | 36-inch aluminized corrugated steel pipe, 12 gage, compaction method B, 20'-30' deep @ roadway centerline | Spillway assembly, 24-inch, 16 gage | Spillway assembly, 30-inch, 16 gage | Spillway assembly, 36-inch, 16 gage | Pipe anchor assembly, 24-inch | Pipe anchor assembly, 30-inch | Pipe anchor assembly, 36-inch | Cleaning culverts in place | Reconditioning drainage structures | Seeding and mulching, dry method |
|---|---|---|---|---|---|---|---|---|---|---|---|---|---|---|---|---|---|---|---|---|---|---|---|---|---|---|---|---|---|---|---|---|---|---|---|---|
| | | Item Number: | 15101 | 15713 | 20102 | 20207 | 20301 | 20310 | 20404 | 20416 | 20419 | 20420 | 20701 | 25104a | 25104b | 30801 | 32222 | 43007 | 60201a | 60201b | 60201c | 60201d | 60201e | 60201f | 60201g | 60601a | 60601b | 60601c | 60603a | 60603b | 60603c | 60708 | 60710 | 62530 |
| | | Unit of Measure: | LSQ | LSQ | LSQ | EA | EA | EA | CY | CY | FT | EA | SY | CY | CY | CY | CY | TON | FT | FT | FT | FT | FT | FT | FT | EA | EA | EA | EA | EA | EA | EA | EA | LSQ |
| | | Contract Quantity | | | | | | | * | * | | | * | * | * | * | * | | | | | | | | | | | | | | | | | |
| Begin | End | Description of Work | | | | | | | | | | | | | | | | | | | | | | | | | | | | | | | | |
| 7.43 | | Begin Work: FSR 1983<br>Intersection with FSR 1983140 | 1 | | | | | | | | | | | | | | | | | | | | | | | | | | | | | | | |
| 7.68 | | Cut outlet ditch through berm, 20' | | | 1 | | | | | | 20 | | | | | | | | | | | | | | | | | | | | | | | |
| 7.77 | | Existing 18" CMP<br>Replace with 24" x 34' CMP | | | 1 | | 1 | | | | | | 15 | 4 | | 1 | | | 34 | | | | | | | | | | | | | | | 1 |
| 8.28 | | Existing 18" CMP<br>Replace with 24" x 34' CMP, 20' down drain | | | 1 | | 1 | | | | | | 15 | 4 | | 1 | | | 34 | | | | | | | 1 | | | 2 | | | | | 1 |
| | 12.01 | End Work<br>Intersection with FSR 1107000b, MP 23.79 | | | | | | | | | | | | | | | | | | | | | | | | | | | | | | | | |
| TOTAL FOR ROAD | | | All | 0 | All | 0 | 2 | 0 | 0 | 0 | 20 | 0 | 30 | 8 | 0 | 2 | 0 | 0.0 | 68 | 0 | 0 | 0 | 0 | 0 | 0 | 1 | 0 | 0 | 2 | 0 | 0 | 0 | 0 | All |

| | | | |
|---|---|---|---|
| U.S. DEPARTMENT OF AGRICULTURE<br>FOREST SERVICE<br>R6<br>PACIFIC NORTHWEST REGION | ROGUE RIVER-SISKIYOU<br>NATIONAL FOREST<br>GOLD BEACH DISTRICT | Design: Lola Coombe<br>Drawn: Lola Coombe<br>Checked: P. Podesta<br>Date: 6/2013 | FSR 1983000<br>WORK LIST & ESTIMATED QUANTITIES<br>TOOTH TIMBER SALE |

| Sheet No. | Total Sheets |
|---|---|
| 11 | 22 |

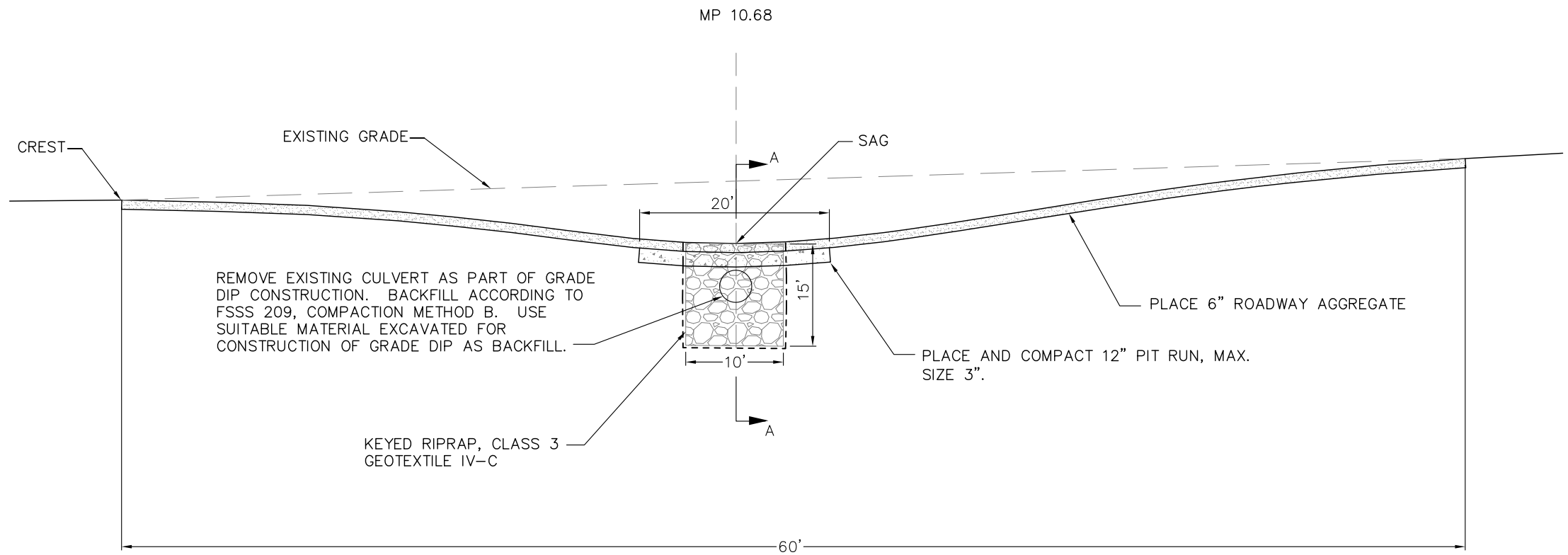


PROFILE

NOTES:

1. SAG OF GRADE DIP SHALL BE SMOOTH AND FREE DRAINING.
2. THE MINIMUM DIFFERENCE IN ELEVATION ALONG THE CUT SLOPE SHOULDER IS 1.1 FEET FROM CREST TO SAG.
3. THE MINIMUM DIFFERENCE IN ELEVATION ALONG THE FILL SLOPE SHOULDER IS 3.1 FEET FROM CREST TO SAG.
4. EXCAVATE MATERIAL TO REMOVE EXISTING CULVERT. BACKFILL AND COMPACT TRENCH AND CATCH BASIN WITH SUITABLE MATERIAL EXCAVATED DURING CONSTRUCTION OF GRADE DIP. COMPLETE CONSTRUCTION OF GRADE DIP.
5. DISPOSE WASTE AT MP 10.73, SEE SHEET 'FSR 1107000a MP 11.20 REALIGNMENT, DISPOSAL SITES'.

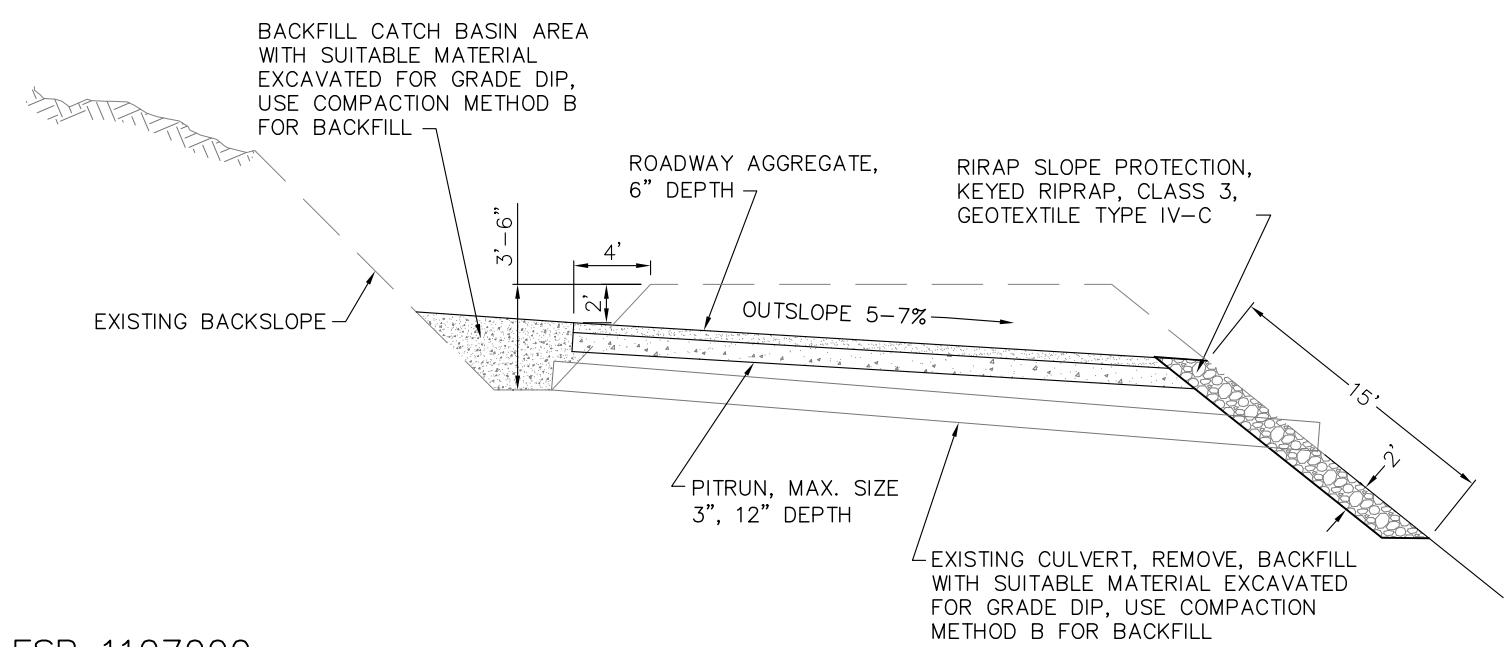


SECTION A–A

DRAWINGS
NOT TO SCALE

FSR 1107000a
MP 10.68

U.S. DEPARTMENT OF AGRICULTURE
FOREST SERVICE
R6
PACIFIC NORTHWEST REGION

Forest
ROGUE RIVER-SISKIYOU NATIONAL FOREST
GOLD BEACH

Design: Lola Coombe
Drawn: Lola Coombe
Checked: P. Podesta
Date: June 2013

Sheet Title:
FSR 1107000a, MP 10.68
GRADE DIP
TOOTH TIMBER SALE

Project No:

Sheet 12 OF 22

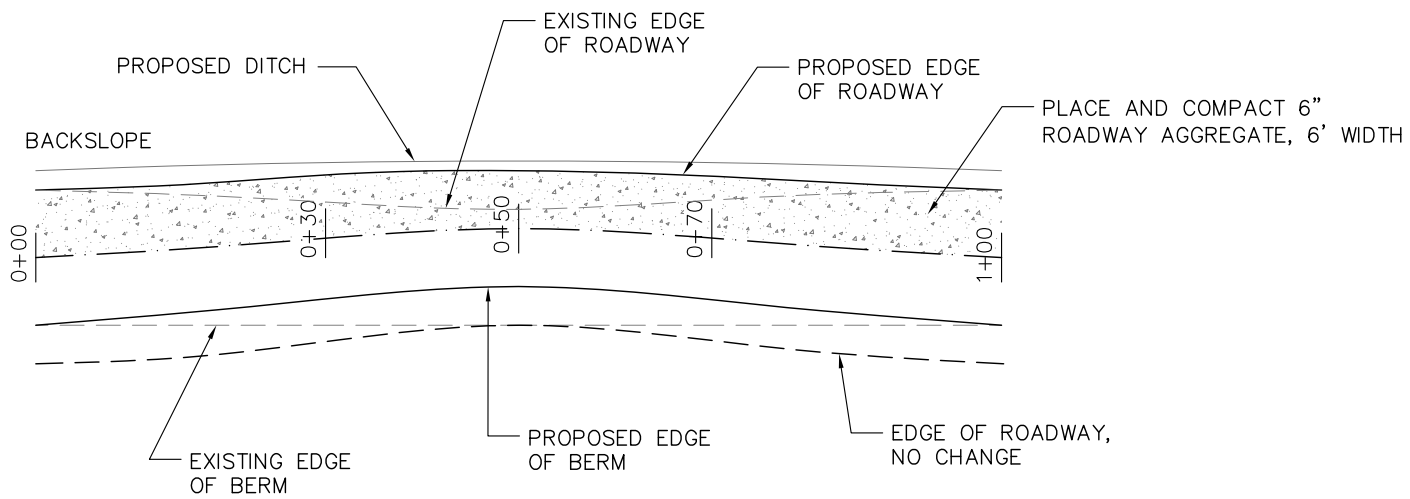


PLAN VIEW

ROAD REALIGNMENT NOTES:

1. TRANSITION FROM EXISTING ROAD WIDTH AT 0+00 AND 1+00 TO 12' ROAD WIDTH AT 0+30 AND 0+70.
2. DISPOSE OF WASTE AT DESIGNATED DISPOSAL SITES.
3. SEED AND MULCH ALL DISTURBED AREAS.

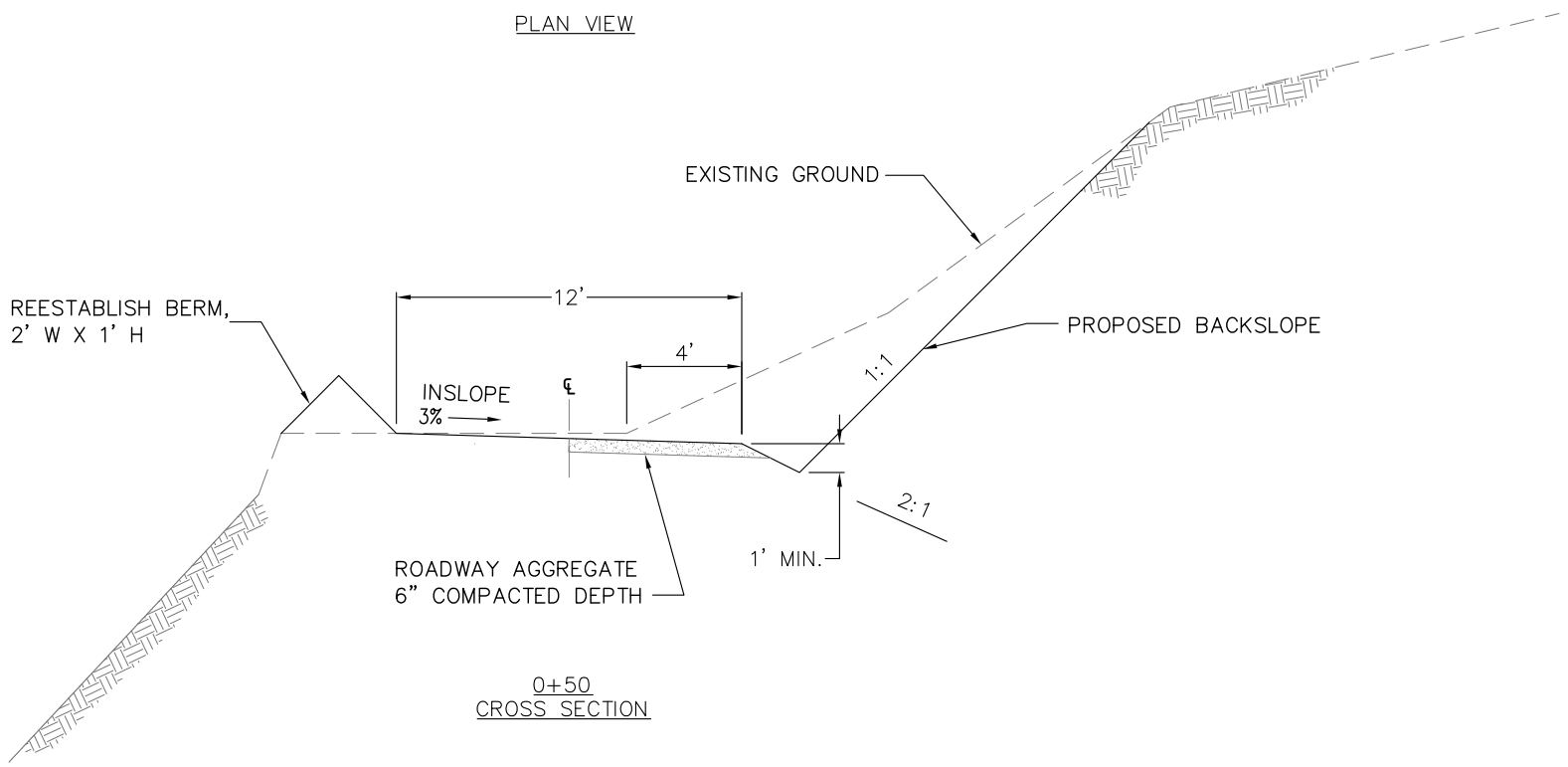


0+50
CROSS SECTION

ROADWAY REALIGNMENT
FSR 1107000a MP 11.20

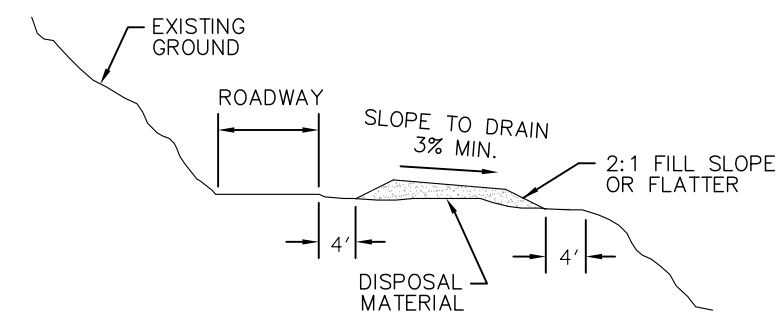


DISPOSAL SITE TYPICAL

| DISPOSAL SITES | |
|---|---|
| ROAD # | MILEPOSTS |
| 1107000a | 10.73, 11.25, 12.64, 13.62 |
| 1107000b | 21.03, 30.40, 30.84 |
| 1983000 | 7.69, 8.09 |

DRAWINGS
NOT TO SCALE

U.S. DEPARTMENT OF AGRICULTURE
FOREST SERVICE
R6
PACIFIC NORTHWEST REGION

Forest
FSR 1107000 MP 11.20
NATIONAL FOREST
GOLD BEACH

Design: Lola Coombe
Drawn: Lola Coombe
Checked: P. Podesta
Date: June 2013

Sheet Title:
FSR 1107000a MP 11.20 REALIGNMENT,
DISPOSAL SITES
TOOTH TIMBER SALE

Project No:

Sheet 13 OF 22

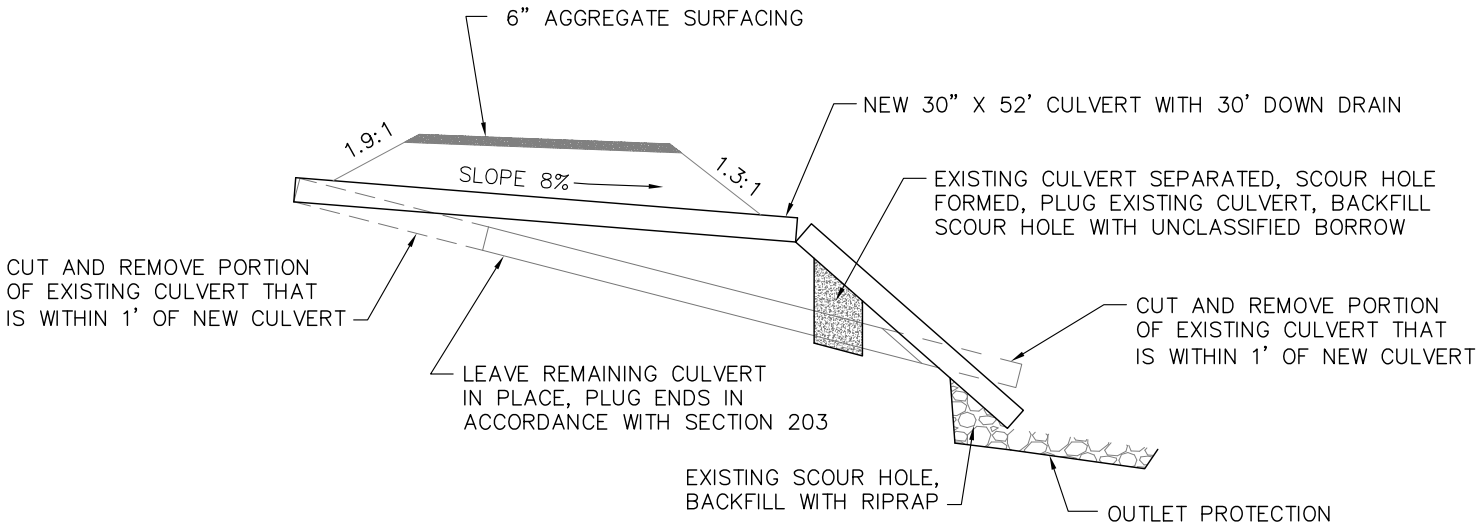


FSR 1107000b MP
30.33

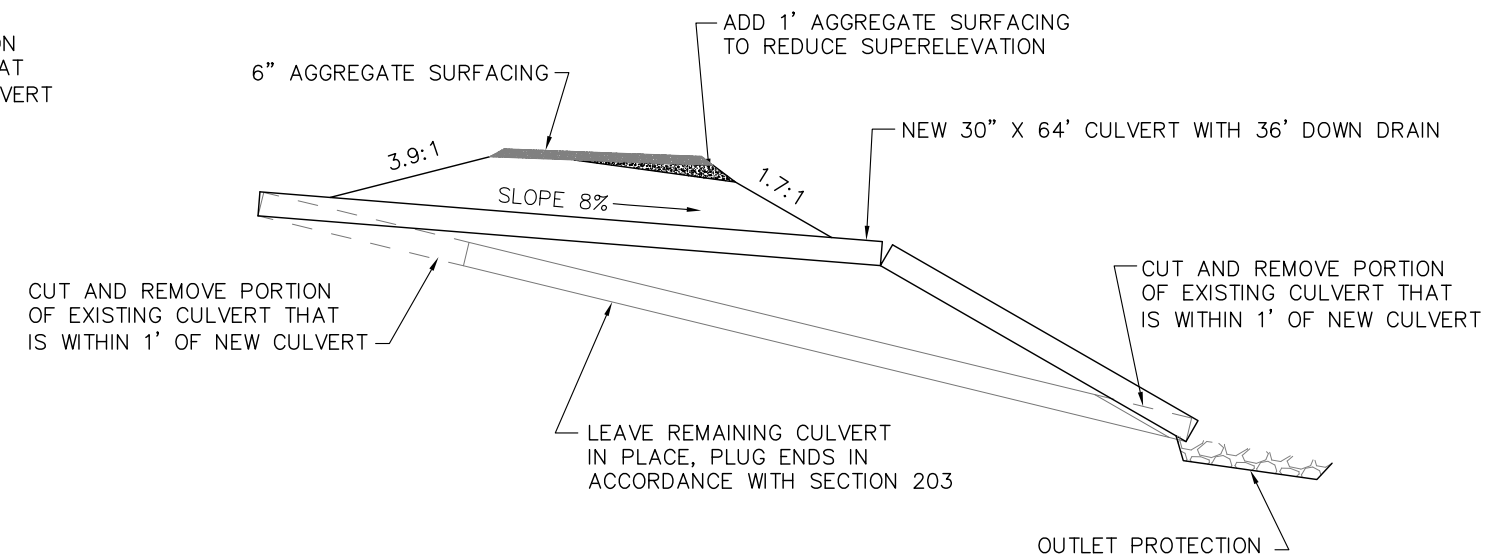


FSR 1107000b MP
30.34

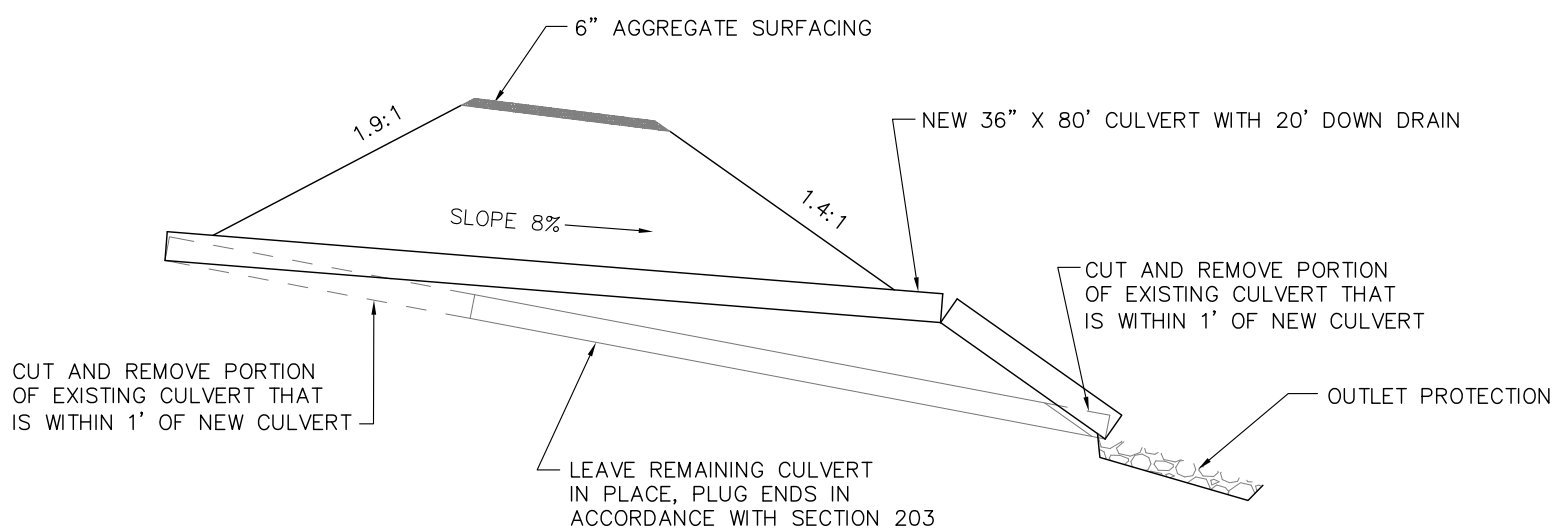


FSR 1107000b MP
30.46

NOTES:

1. INSTALL CULVERTS IN ACCORDANCE WITH SHEET 'CULVERT INSTALLATION & BEDDING'.
2. CONSTRUCT OUTLET PROTECTION IN ACCORDANCE WITH SHEET 'CULVERT OUTLET RIPRAP PROTECTION'.
3. DOWN DRAINS CONSIST OF 20' SPILLWAY PLUS AN OUTLET PIPE FOR ANY ADDITIONAL LENGTH. INSTALL IN ACCORDANCE WITH SHEET 'CULVERT DOWN DRAIN WITH ANCHOR ASSEMBLY'.
4. MATCH EXISTING ROAD WIDTH AND GRADE.
5. MATCH EXISTING FILL SLOPE AND GRADE.
6. SEE FSSS SECTION 107 FOR SEASONAL RESTRICTIONS AND SECTION 156 FOR ALLOWABLE ROAD CLOSURES.
7. HAUL UNSUITABLE AND EXCESS MATERIAL TO APPROVED DISPOSAL SITES WITHIN SOD QUARANTINE AREA.
8. SEED AND MULCH ALL DISTURBED AREAS.

DRAWINGS
NOT TO SCALE

EROSION AND SEDIMENT CONTROL:

1. PRIOR TO THE START OF CONSTRUCTION, SUBMIT A WRITTEN PLAN THAT PROVIDES PERMANENT AND TEMPORARY EROSION CONTROL MEASURES TO MINIMIZE EROSION AND SEDIMENTATION DURING AND AFTER CONSTRUCTION.
2. PURCHASER SHALL PROVIDE SILT FENCE AND/OR OTHER CONTROL DEVICES, AS MAY BE REQUIRED TO CONTROL SOIL EROSION DURING ROAD RECONSTRUCTION.
3. EROSION AND SEDIMENT CONTROL MEASURES ARE TO BE INSTALLED PRIOR TO BEGINNING EARTH DISTURBING ACTIVITIES IN ACCORDANCE WITH THE APPROVED EROSION CONTROL PLAN. ADDITIONAL EROSION AND SEDIMENT CONTROL MEASURES MAY BE REQUIRED BY CONTRACTING OFFICER.
4. STABILIZATION MEASURES SHALL BE INITIATED AS SOON AS PRACTICABLE IN PORTIONS OF THE SITE WHERE CONSTRUCTION ACTIVITIES HAVE TEMPORARILY OR PERMANENTLY CEASED, BUT IN NO CASE MORE THAN 14 DAYS AFTER WORK HAS CEASED.
5. ALL SEDIMENT AND EROSION CONTROL DEVICES SHALL BE INSPECTED EVERY SEVEN (7) DAYS OR AFTER EACH RAINFALL OCCURRENCE THAT EXCEEDS ONE-HALF (1/2) INCH. DAMAGED OR INEFFECTIVE DEVICES SHALL BE REPAIRED OR REPLACED.
6. SEDIMENT SHALL BE REMOVED FROM BEHIND TEMPORARY SILT FENCING WHEN THE DEPTH OF SEDIMENT REACHES 6 INCHES.
7. ALL DISTURBED AREAS WHERE EARTH IS EXPOSED SHALL BE CLEANED, GRADED SMOOTH, SHAPED TO DRAIN. SEEDED AND MULCHED. SEED WILL BE GOVERNMENT FURNISHED. MULCH SHALL BE CERTIFIED WEED FREE.
8. ALL TEMPORARY SEDIMENT CONTROL MEASURES AND PRACTICES SHALL BE REMOVED WITHIN TWO (2) MONTHS AFTER THE FOREST SERVICE HAS ACCEPTED THE PROJECT.

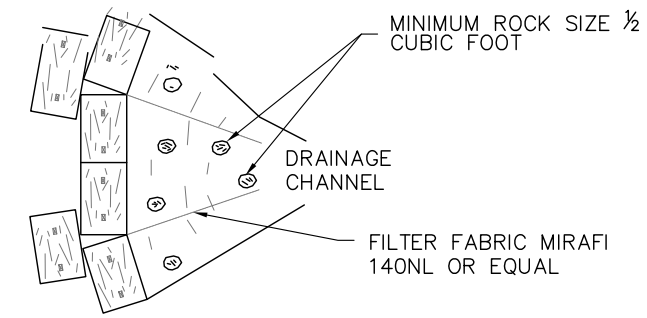


TEMPORARY STRAW SEDIMENT TRAP
PLAN VIEW

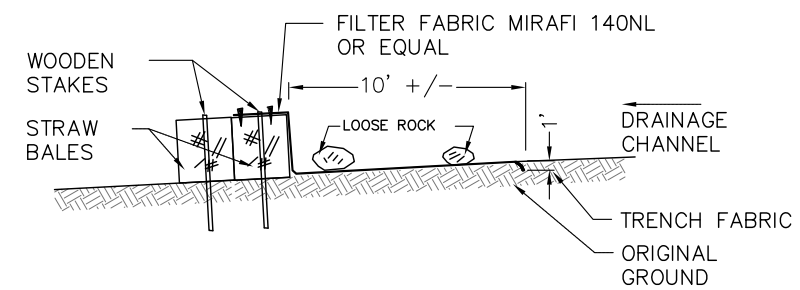


TEMPORARY SEDIMENT TRAP
PROFILE

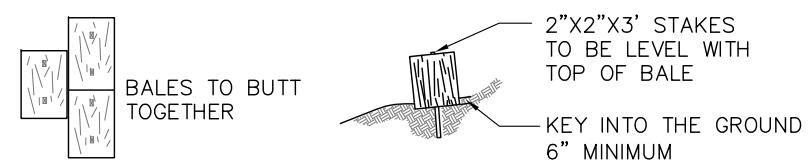


TEMPORARY STRAW SILT CHECKS

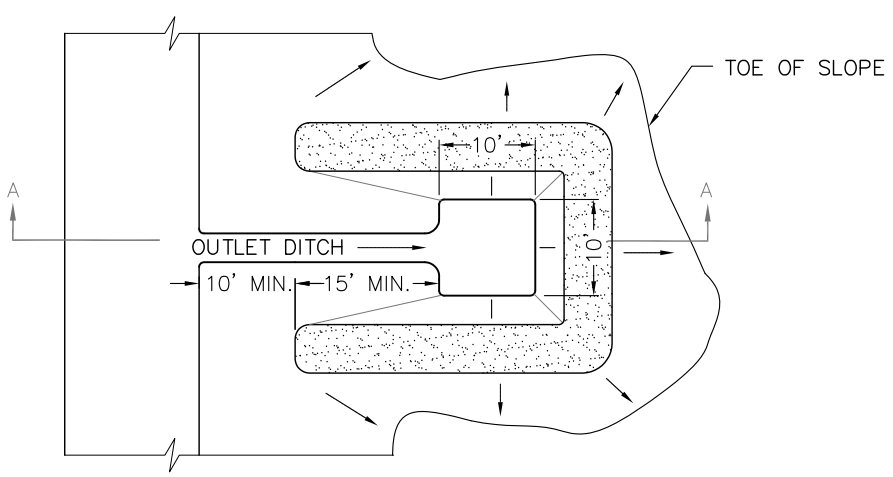


SEDIMENT BASIN PLAN VIEW

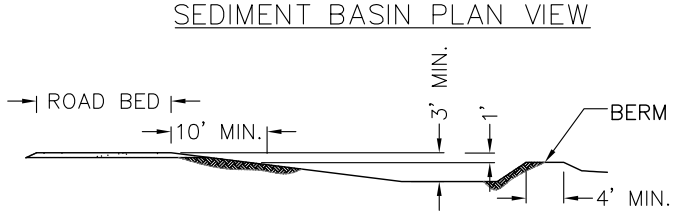


SEDIMENT BASIN SECTION A-A

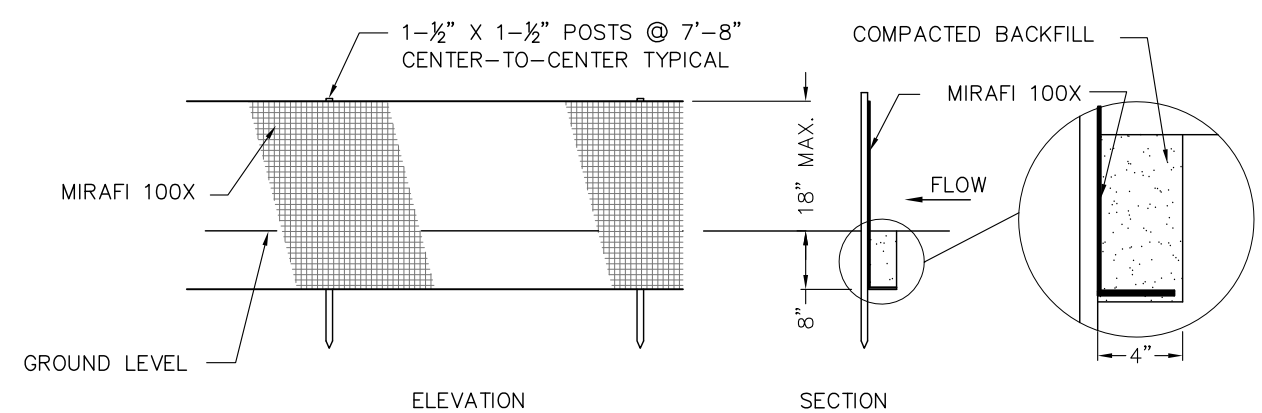


SILT FENCE DETAILS

DRAWINGS
NOT TO SCALE

U.S. DEPARTMENT OF AGRICULTURE
FOREST SERVICE
R6
PACIFIC NORTHWEST REGION

Forest
ROGUE RIVER-SISKIYOU NATIONAL FOREST
GOLD BEACH

Design: Lola Coombe
Drawn: Lola Coombe
Checked: P. Podesta
Date: June 2013

Sheet Title:
SEDIMENT CONTROL
TOOTH TIMBER SALE

Project No:

| COUPLING BANDS FOR METAL PIPE CULVERT | | | | | |
|---|---|---|---|---|---|
| CORRUGATION SIZE | PIPE DIAMETER | PIPE–ARCH SPAN X RISE | MINIMUM BAND WIDTH – W | | |
| | | | ANNULAR CORRUGATED BANDS | HELICALLY CORRUGATED BANDS | SEMI–CORRUGATED BANDS |
| INCHES | | | | | |
| 1–1/2 by 1/4 | under drain | – | 12 | 12 | 12 |
| 2–2/3 by 1/2 | 12 to 36 | 17x13 to 42x29 | 12 | 12 | 12 |
| | 42 to 72 | 49x33 to 83x57 | 12 | 12 | 12 |
| | 78 to 84 | – | 12 | 12 | 12 |
| 3 by 1 | 36 to 72 | 42x29 to 81x59 | 12 | 14 | 12 |
| | 78 to 144 | 87x63 to 142x91 | 12 | 14 | 12 |
| 5 by 1 | 48 to 72 | 57x38 to 81x59 | 20 | 22 | 12 |
| | 78 to 144 | 87x63 to 142x91 | 20 | 22 | 12 |

NOTES:

1. FABRICATE ANNULAR, HELICAL AND SEMI–CORRUGATED TYPE COUPLING BANDS FROM THE SAME METAL AS THE CONNECTING PIPE. PROVIDE COUPLING BANDS NOT MORE THAN 2 NOMINAL SHEET THICKNESS THINNER THAN THE THICKNESS OF THE PIPE TO BE CONNECTED, AND NO THINNER THAN 0.052 INCH (18 GAGE) FOR STEEL OR 0.048 INCH (18 GAGE) FOR ALUMINUM. FASTEN COUPLING BANDS WITH THE FOLLOWING SIZE OF BOLT:

   3/8–INCH FOR PIPE DIAMETER – 18" (21"X15" PIPE ARCH) OR LESS
   1/2–INCH FOR PIPE DIAMETER – 21" (24"X18" PIPE ARCH) OR MORE

2. FOR HELICALLY CORRUGATED PIPE WITH REROLLED ENDS, THE NOMINAL CORRUGATION SIZE REFERS TO THE DIMENSION OF THE END CORRUGATION IN THE PIPE.

3. USE ANNULAR CORRUGATED BANDS WITH PIPES HAVING ANNULAR CORRUGATIONS OR WITH HELICAL PIPE HAVING REROLLED ENDS TO FORM ANNULAR CORRUGATIONS.

4. USE HELICAL CORRUGATED BAND WITH PIPES HAVING HELICALLY CORRUGATED ENDS. HELICAL CULVERT INSTALLATIONS SHALL HAVE THE ROLLED SEAM AT THE INLET PLACED IN THE LOWER ONE–HALF OF THE PIPE DIAMETER.

5. SMOOTH SLEEVE–TYPE COUPLERS AND FLAT BANDS MAY BE USED FOR PIPE DIAMETERS OF 12 INCHES OR LESS. USE A MATCHING METAL HAVING A NOMINAL THICKNESS OF NOT LESS THAT 0.040 INCH (20 GAGE) FOR STEEL, OR 0.036 INCH (20 GAGE) FOR ALUMINUM, OR A PLASTIC WITH AN EQUIVALENT STRENGTH TO METAL.

| EQUIVALENT CULVERT THICKNESS | | |
|---|---|---|
| GAUGE NUMBER | THICKNESS – INCHES | |
| | STEEL | ALUMINUM |
| 16 | 0.064 | 0.060 |
| 14 | 0.079 | 0.075 |
| 12 | 0.109 | 0.105 |
| 10 | 0.138 | 0.135 |
| 6 | 0.168 | 0.165 |

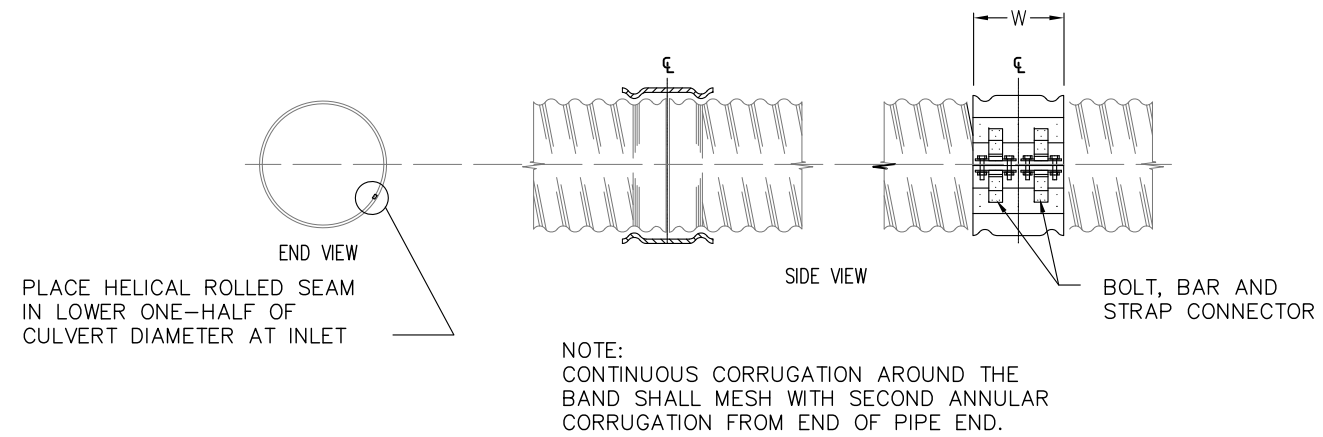


SEMI–CORRUGATED BAND

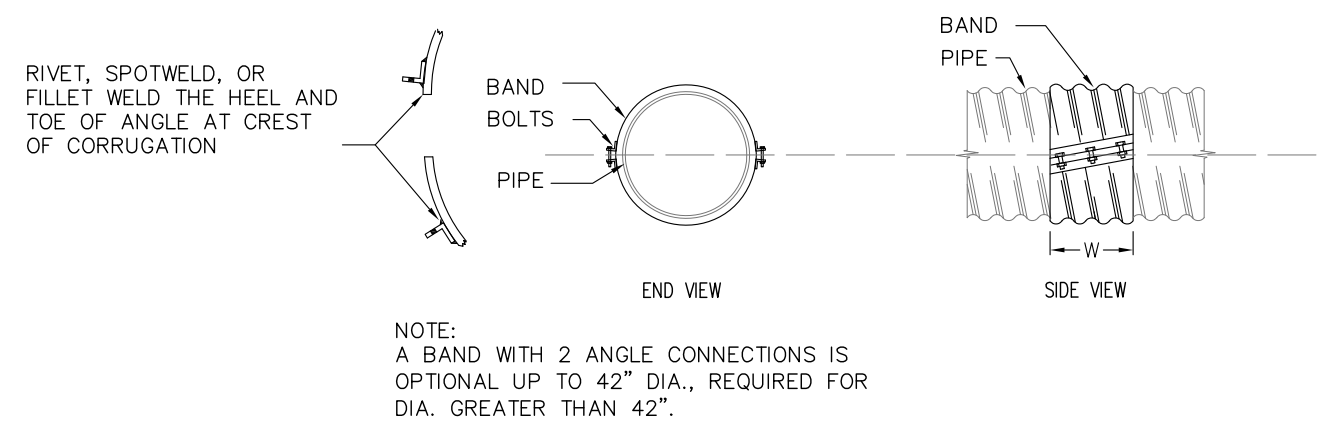


HELICAL BAND

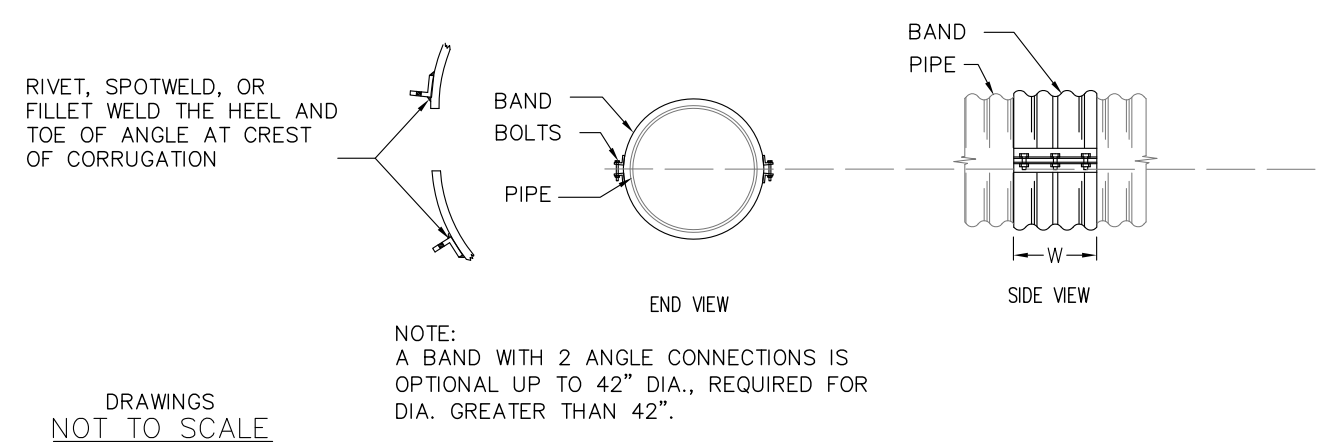


DRAWINGS
NOT TO SCALE

ANNULAR BAND

U.S. DEPARTMENT OF AGRICULTURE
FOREST SERVICE
R6
PACIFIC NORTHWEST REGION

Forest
ROGUE RIVER-SISKIYOU NATIONAL FOREST
GOLD BEACH

Design: Lola Coombe
Drawn: Lola Coombe
Checked: P. Podesta
Date: June 2013

Sheet Title:
COUPLING BANDS FOR METAL PIPE CULVERTS
TOOTH TIMBER SALE

Project No:

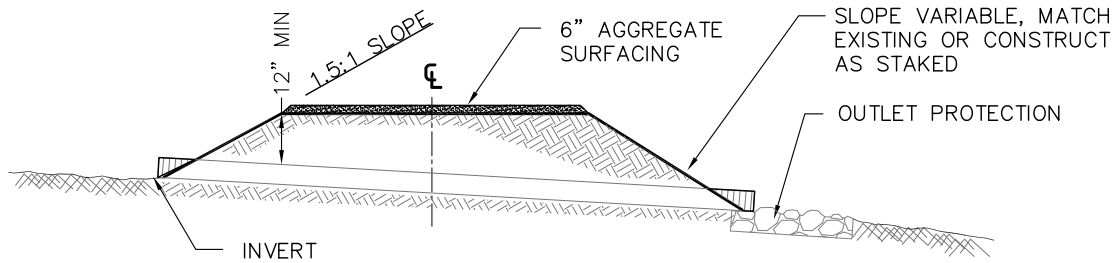


TYPE 1 – CULVERT
FILL SECTION INSTALLATION

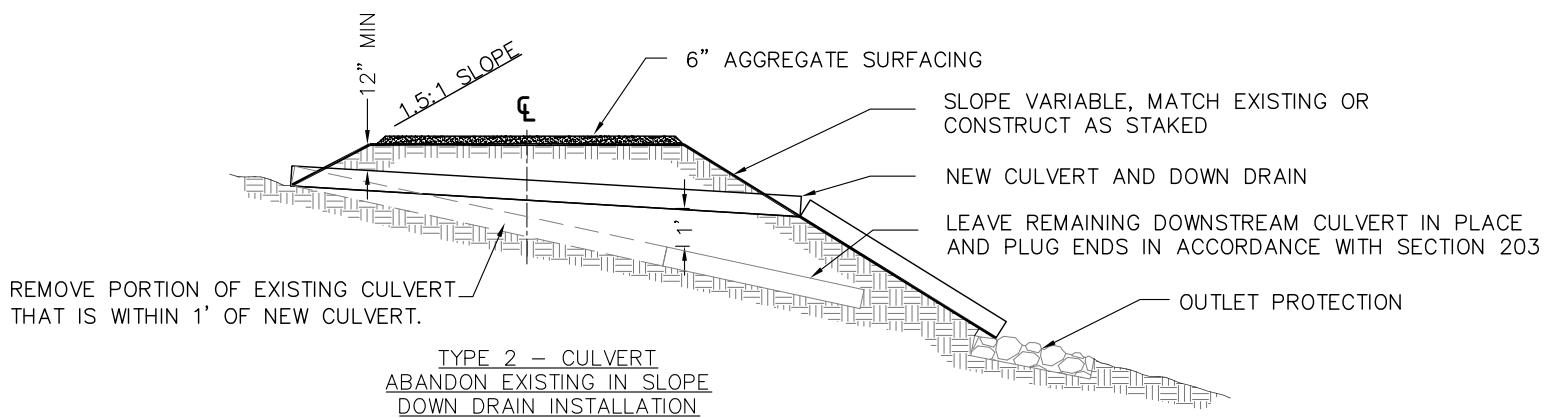


TYPE 2 – CULVERT
ABANDON EXISTING IN SLOPE
DOWN DRAIN INSTALLATION

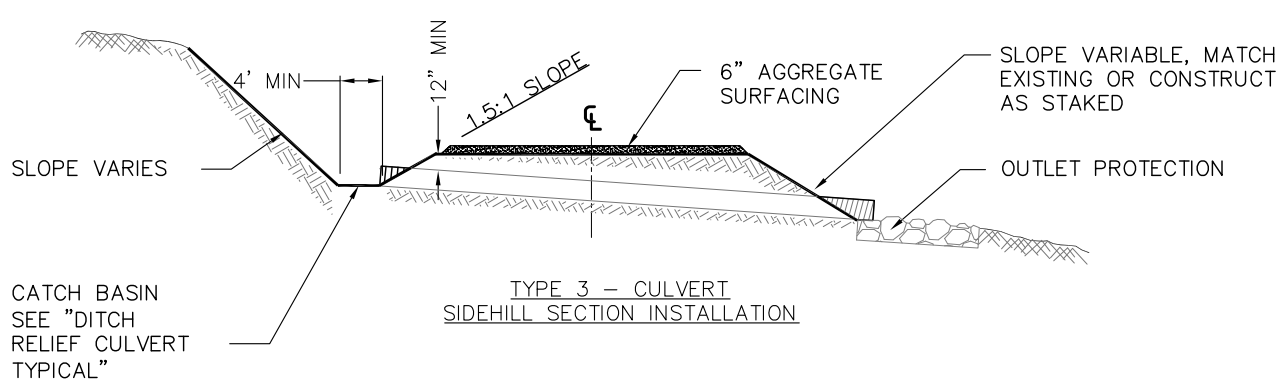


TYPE 3 – CULVERT
SIDEHILL SECTION INSTALLATION

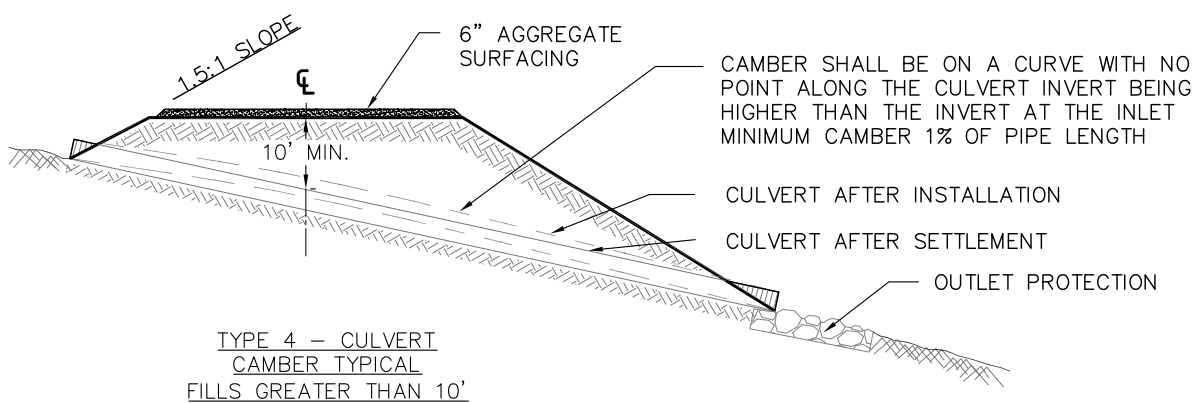


TYPE 4 – CULVERT
CAMBER TYPICAL
FILLS GREATER THAN 10'

DRAWINGS
NOT TO SCALE

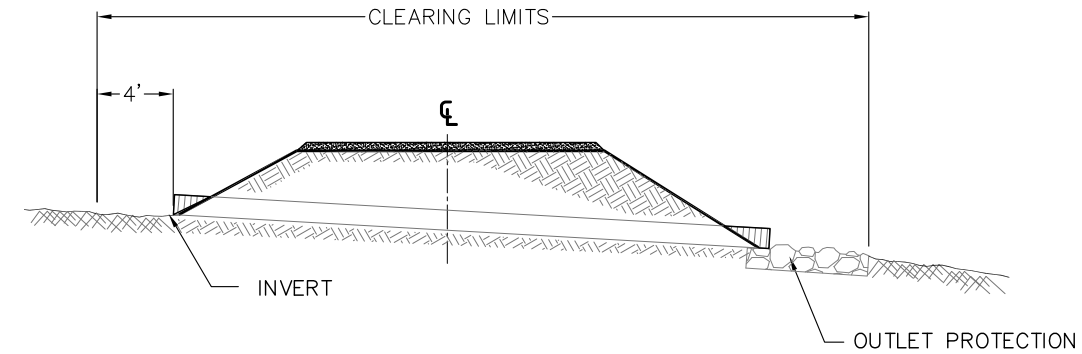


CLEARING LIMITS

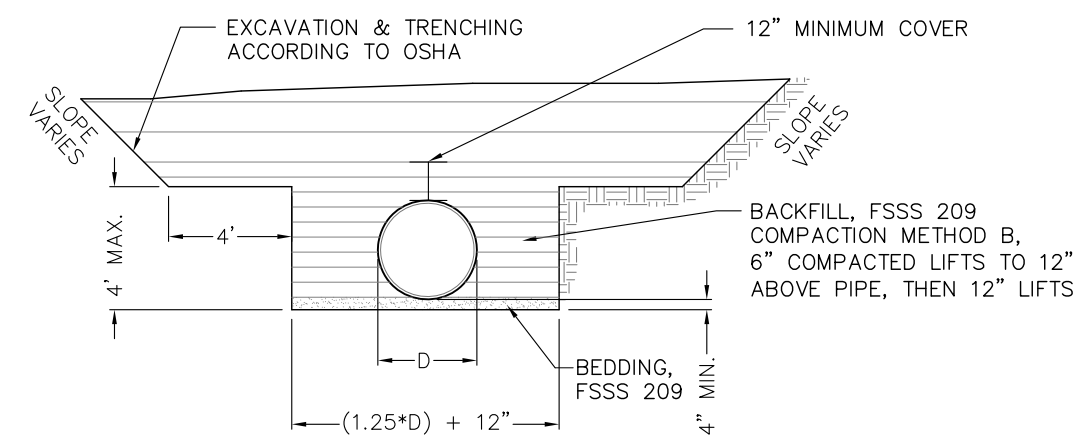


TYPICAL CMP ROUND CULVERT SECTION

NOTES:

1. CLEAR AND GRUB IN ACCORDANCE WITH SECTION 201. SEE PAY ITEM 201 FOR DISPOSAL METHODS.
2. INSTALL NEW CULVERT ACCORDING TO SECTION 602. EXCAVATION, BEDDING, AND BACKFILL ARE INCIDENTAL TO ITEM 602 AND IN ACCORDANCE WITH SECTION 209. USE COMPACTION METHOD B FOR BACKFILL.
3. MATCH EXISTING ROAD WIDTH AND GRADE. IMPORT SELECT BORROW AS NEEDED.
4. PLACE CRUSHED AGGREGATE AT 6" DEPTH OVER CULVERT INSTALLATION FOR ROAD SURFACING. SALVAGE EXISTING ROAD AGGREGATE AND UTILIZE AS BASE ROCK.
5. PROVIDE FOR A 25' TRANSITION GRADE INTO INLET OF CULVERT. SEE 'CULVERT CATCH BASIN & OUTLET DITCH'.
6. ALL EXCAVATION AND TRENCHING OPERATIONS SHALL CONFORM TO OSHA REQUIREMENTS.
7. DO NOT OPERATE ANY HEAVY EQUIPMENT OVER ANY CULVERT UNTIL IT HAS BEEN PROPERLY BACK FILLED WITH A MINIMUM OF 1–FOOT COVER.
8. CULVERTS SHALL BE INSTALLED AS STAKED, WITH A MINIMUM OF 8% SLOPE WHERE POSSIBLE.
9. THE MINIMUM LENGTH OF A SINGLE PIPE SECTION FOR ANY INSTALLATION SHALL NOT BE LESS THAN 10 L.F.
10. FIELD CUTTING OF CULVERT IS NOT PERMITTED UNLESS APPROVED BY THE CONTRACTING OFFICER.
11. REMOVE AND DISPOSE OF EXISTING CULVERT ACCORDING TO SECTION 203.

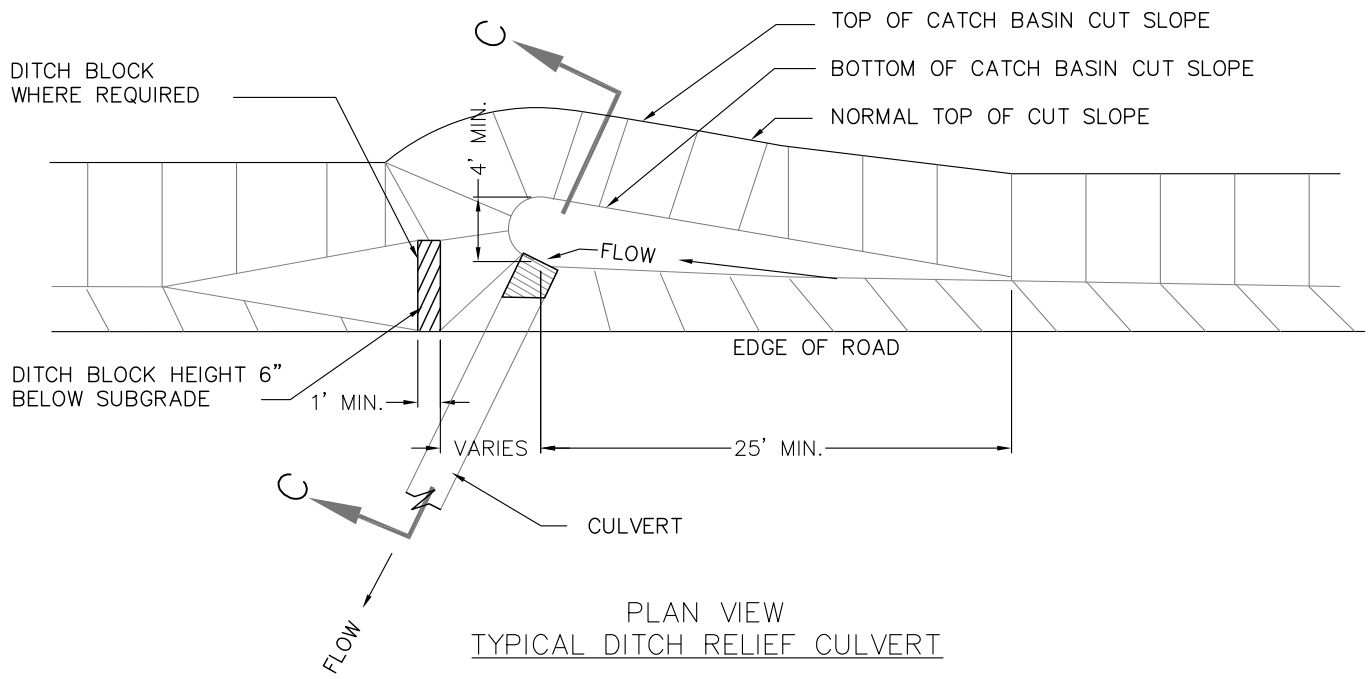


PLAN VIEW
TYPICAL DITCH RELIEF CULVERT

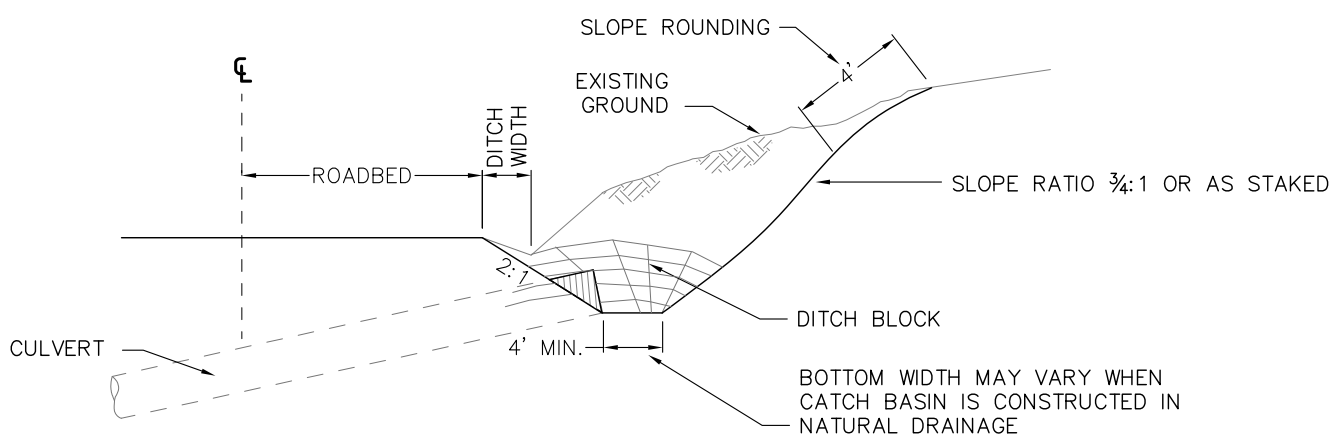


SECTION C–C
DITCH RELIEF CULVERT

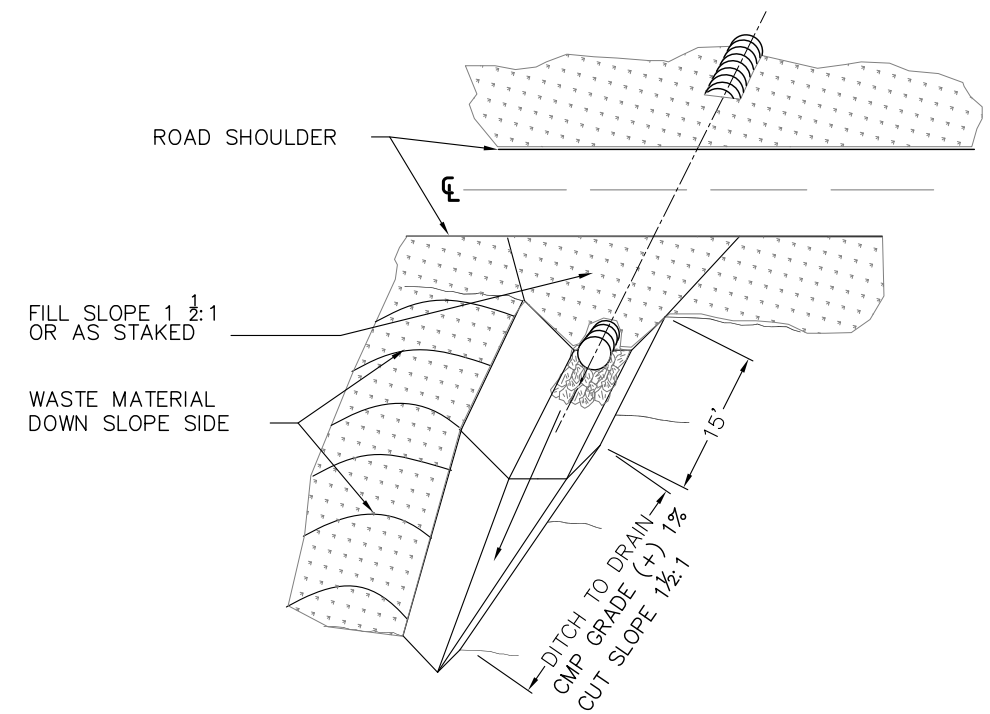


OUTLET "V" DITCH
PICTORIAL VIEW

NOTE:

MATERIAL REMOVED IN THE MAINTENANCE, RECONDITIONING, & CLEANING OF CATCH BASINS & CULVERTS SHALL NOT BE DEPOSITED ON / OR ABOVE CUT SLOPES. MATERIAL MAY BE DEPOSITED ON FILL SLOPE TO A DEPTH OF NOT MORE THAN 4 INCHES WHEN APPROVED BY THE CONTRACTING OFFICER. OTHERWISE ALL MATERIAL SHALL BE REMOVED FROM NATIONAL FOREST LANDS IN A LEGAL MANNER OR DISPOSAL AREA AS APPROVED BY THE CONTRACTING OFFICER.

DRAWINGS
NOT TO SCALE

U.S. DEPARTMENT OF AGRICULTURE
FOREST SERVICE
R6
PACIFIC NORTHWEST REGION

Forest
ROGUE RIVER-SISKIYOU
NATIONAL FOREST
GOLD BEACH

Design: Lola Coombe
Drawn: Lola Coombe
Checked: P. Podesta
Date: June 2013

Sheet Title:
CULVERT CATCH BASIN
& OUTLET DITCH
TOOTH TIMBER SALE

Project No:

Sheet 18 OF 22

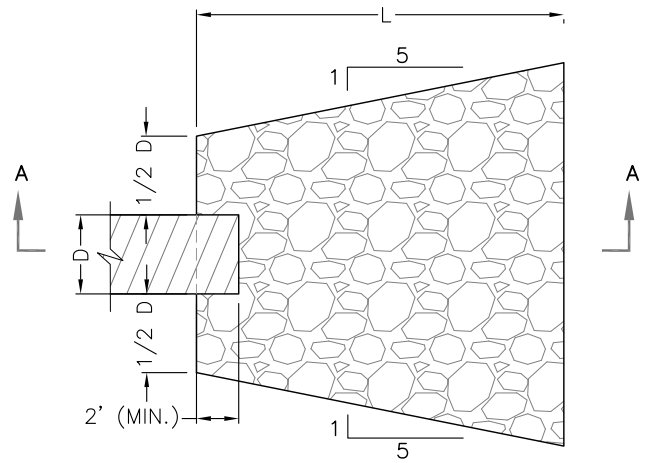


PLAN VIEW

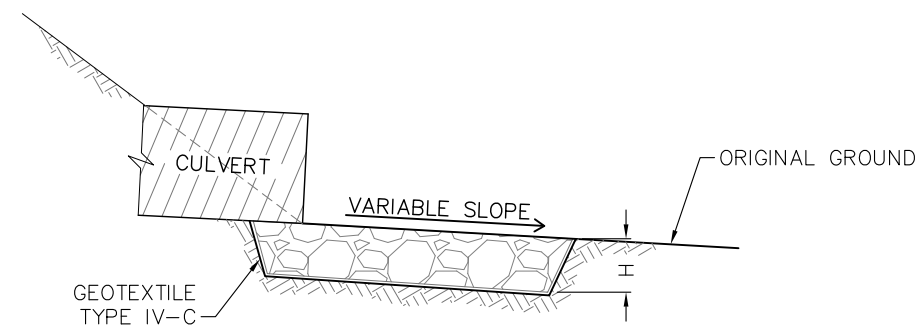


SECTION A–A

TYPE A CULVERT OUTLET PROTECTION

| TYPE A CULVERT OUTLET PROTECTION DIMENSIONS AND ESTIMATED QUANTITIES | | | | | |
|---|---|---|---|---|---|
| CULVERT SIZE D (inches) | RIPRAP CLASS | LENGTH OF APRON L (feet) | DEPTH OF APRON H (feet) | ESTIMATED RIPRAP QUANTITY (CY) | ESTIMATED GEOTEXTILE QUANTITY (SY) |
| 18 | 2 | 10 | 1.5 | 3 | 11 |
| 24 | 3 | 12 | 1.5 | 4 | 15 |
| 30 | 3 | 14 | 2 | 8 | 22 |
| 36 | 3 | 16 | 2 | 11 | 28 |
| 42 | 4 | 18 | 2.5 | 18 | 37 |
| 48 | 4 | 20 | 2.5 | 22 | 44 |

NOTES:

1. FURNISH GEOTEXTILE CONFORMING TO FP–03 SUBSECTION 714.01(a).
2. EXCAVATION FOR PLACEMENT OF RIPRAP WILL NOT BE MEASURED FOR PAYMENT.
3. RIPRAP SHALL BE PLACED BEFORE OR DURING CULVERT INSTALLATION.

DRAWINGS
NOT TO SCALE

U.S. DEPARTMENT OF AGRICULTURE
FOREST SERVICE
R6
PACIFIC NORTHWEST REGION

Forest
ROGUE RIVER-SISKIYOU
NATIONAL FOREST
GOLD BEACH

Design: Lola Coombe
Drawn: Lola Coombe
Checked: P. Podesta
Date: June 2013

Sheet Title:
CULVERT OUTLET
RIPRAP PROTECTION
TOOTH TIMBER SALE

Project No:

NOTES:

1. FABRICATE SPILLWAY ASSEMBLY FROM ANNULAR CORRUGATED PIPE, OR FROM HELICALLY CORRUGATED PIPE WITH FACTORY ANNULAR OR REFORMED ENDS.
2. ANCHOR SETS SHALL CONSIST OF 2–SIX FOOT METAL FENCE POSTS (AASHTO M 281) AND NO. 9 GALVANIZED WIRE. 3 STRANDS OF WIRE SHALL BE TWISTED TOGETHER AND WRAPPED AROUND THE ENTIRE CIRCUMFERENCE OF THE PIPE.
3. MAKE ALL BANDED CONNECTIONS WATER TIGHT BY PLACING 1/4" BEAD OF APPROVED CAULKING UNDER EACH HALF OF THE BAND BEFORE TIGHTENING.
4. WHEN REQUIRED, PLACE RIPRAP CONFORMING TO SECTION 251 FOR PROTECTIVE APRON.
5. GALVANIZE ALL ITEMS OF ANCHOR ASSEMBLY AFTER FABRICATION.
6. ALTERNATE DESIGNS MAY BE USED IF APPROVED BY THE CONTRACTING OFFICER.

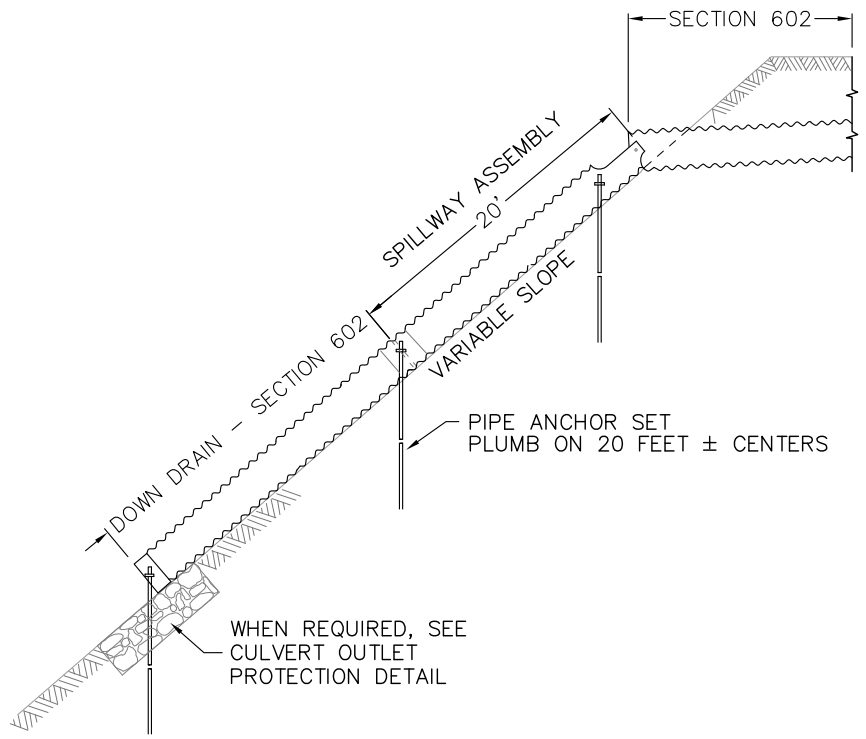


ELEVATION

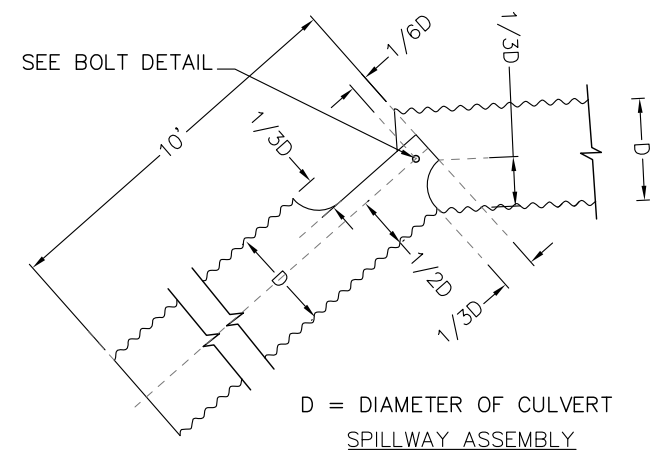


D = DIAMETER OF CULVERT

SPILLWAY ASSEMBLY

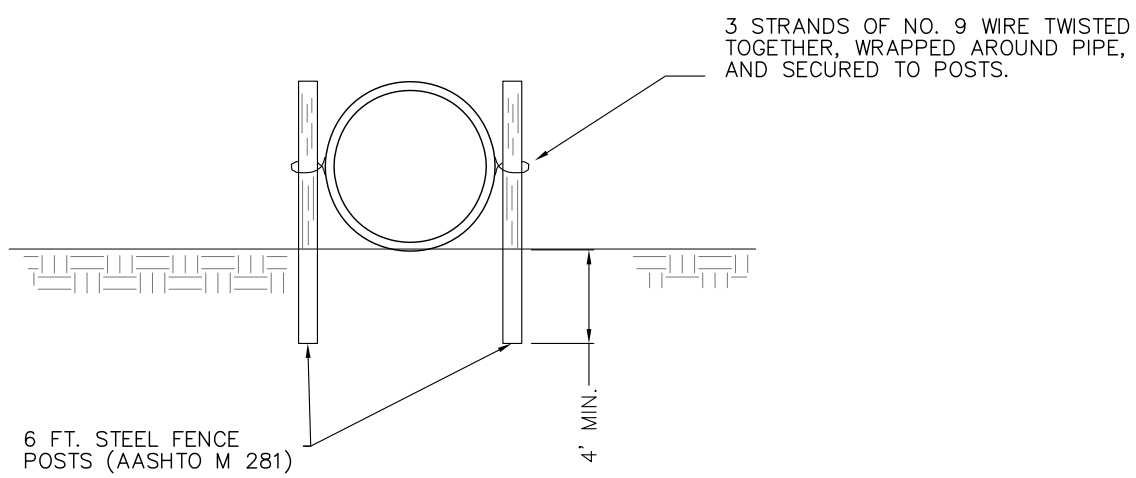


ANCHOR SET

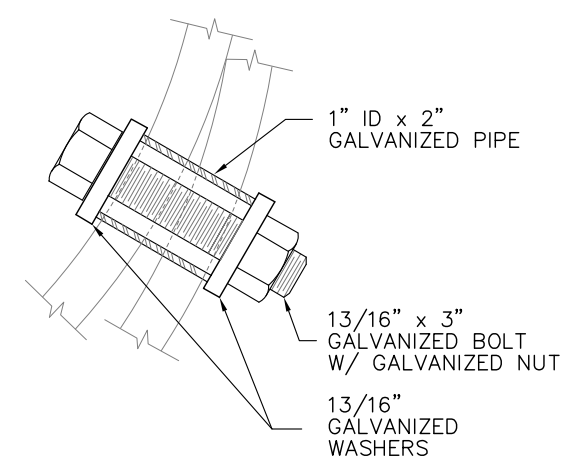


BOLT DETAIL

DRAWINGS
NOT TO SCALE

U.S. DEPARTMENT OF AGRICULTURE
FOREST SERVICE
R6
PACIFIC NORTHWEST REGION

Forest
ROGUE RIVER-SISKIYOU
NATIONAL FOREST
GOLD BEACH

Design: Lola Coombe
Drawn: Lola Coombe
Checked: P. Podesta
Date: June 2013

Sheet Title:
CULVERT DOWN DRAIN
WITH ANCHOR ASSEMBLY
TOOTH TIMBER SALE

Project No:

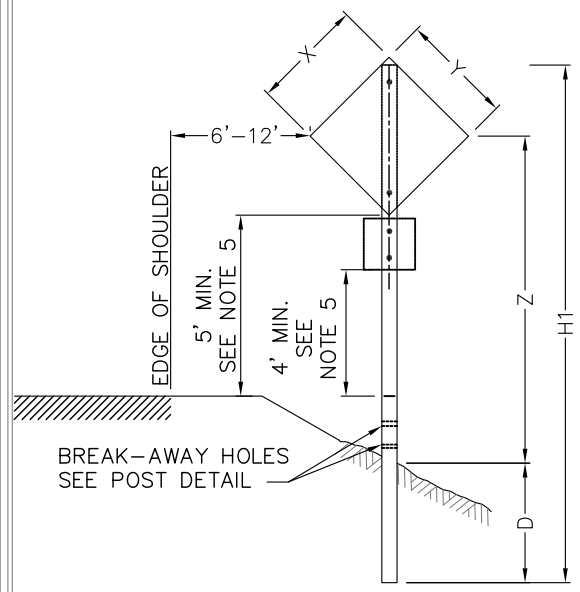


SIGN POST DETAIL

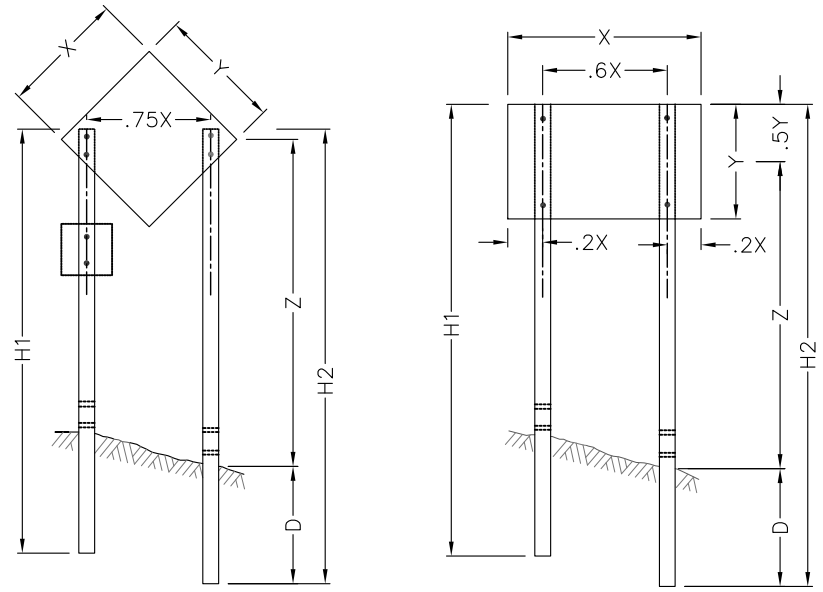


TWO POST SIGN

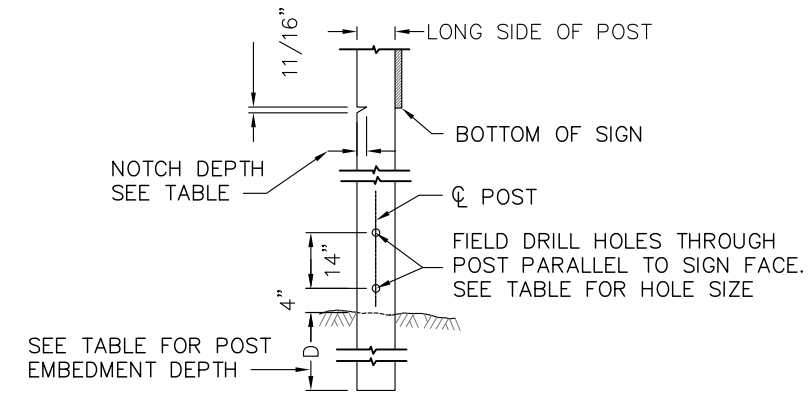


POST DETAIL

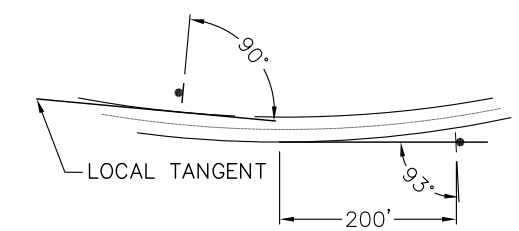


ON TANGENT ALIGNMENT 93°

SIGN INSTALLATION ANGLE

DRAWINGS
NOT TO SCALE

WOOD POST SELECTION TABLE

| SIGN SHAPE | X x Y | GROUND LINE TO CENTER OF SIGN HEIGHT (Z) | | | | | | | | | |
|---|---|---|---|---|---|---|---|---|---|---|---|
| | | Z IS 10' OR LESS | | | | | Z IS GREATER THAN 10' | | | | |
| | | NUMBER OF POSTS | POST SIZE | D | HOLE SIZE | NOTCH DEPTH | NUMBER OF POSTS | POST SIZE | D | HOLE SIZE | NOTCH DEPTH |
| ◇⬡ | 30" X 30" | 1 | 4" X 4" | 36" | 0 | 0 | 1<br>or 2 | 4" X 6"<br>4" X 4" | 48"<br>36" | 1½"<br>0 | 0<br>0 |
| ◇⬡⬡ | 36" X 36" | 1<br>or 2 | 4" X 6"<br>4" X 4" | 48"<br>36" | 1½"<br>0 | 0 | 1<br>or 2 | 4" X 6"<br>4" X 4" | 48"<br>36" | 1½"<br>0 | 0<br>0 |
| ◇⬡ | 48" X 48" | 1 | 4" x 6" | 48" | 1½" | 0 | 1<br>or 2 | 6" X 8"<br>4" X 6" | 48"<br>48" | 3"<br>1½" | 0<br>1¾" |
| ▭ | 60" X 30" | 2 | 4" x 4" | 36" | 0 | 0 | 2 | 4" x 6" | 48" | 1½" | 1¾" |
| ▭ | 78" X 42" | 2 | 4" x 6" | 48" | 1½" | 1¾" | 2 | 4" x 6" | 48" | 1½" | 1¾" |
| ▭ | 96" X 48" | 2 | 4" x 6" | 48" | 1½" | 1¾" | 2 | 6" x 8" | 48" | 3" | 2¼" |

NOTE:

1. ATTACH SIGN PANELS WITH A MINIMUM OF 2 – ¼" DIA. BOLTS PER POST.
2. MOUNT SIGNS SMALLER THAN LISTED ON A SINGLE 4" X 4" POST. FOR SIGNS NOT SHOWN, USE NEXT LARGEST SIZE.
3. H1 AND H2 = OVERALL POST LENGTH.
   SELECT POST LENGTHS TO FIT FIELD CONDITIONS.
4. D = POST EMBEDMENT DEPTH FOR AVERAGE SOIL CONDITIONS.
5. WHEN PEDESTRIANS ARE PRESENT, OR IN AREAS WHERE THE VIEW IS OBSTRUCTED, USE 7' MINIMUM MOUNTING HEIGHT.
6. USE TYPE III OR HIGHER TYPE SHEETING ON ALL SIGNS AND CHANNELIZING DEVICES. WARNING LIGHTS ARE NOT NORMALLY NEEDED ON DEVICES WITH TYPE III OR HIGHER TYPE SHEETING, BUT MAY BE BENEFICIAL TO ATTRACT THE DRIVERS ATTENTION IN FOG OR OTHER SPECIAL CONDITIONS. WHEN USED, APPLY THE APPROPRIATE TYPE OR WARNING LIGHT (TYPE A, B, C, OR D) PER THE MUTCD CHAPTER 6F.
7. ENSURE ALL SIGN SUPPORTS EXPOSED TO IMPACT BY TRAFFIC MEET THE REQUIREMENTS OF NCHRP–350 FOR CRASH WORTHINESS.
8. DO NOT STORE TRAFFIC CONTROL DEVICES ALONG THE ROADWAY WHEN NOT IN USE. COVER POST–MOUNTED SIGNS WHEN NOT APPLICABLE.
9. STATE STANDARDS MAY BE USED AS AN ALTERNATIVE IF APPROVED BY THE CONTRACTING OFFICER.

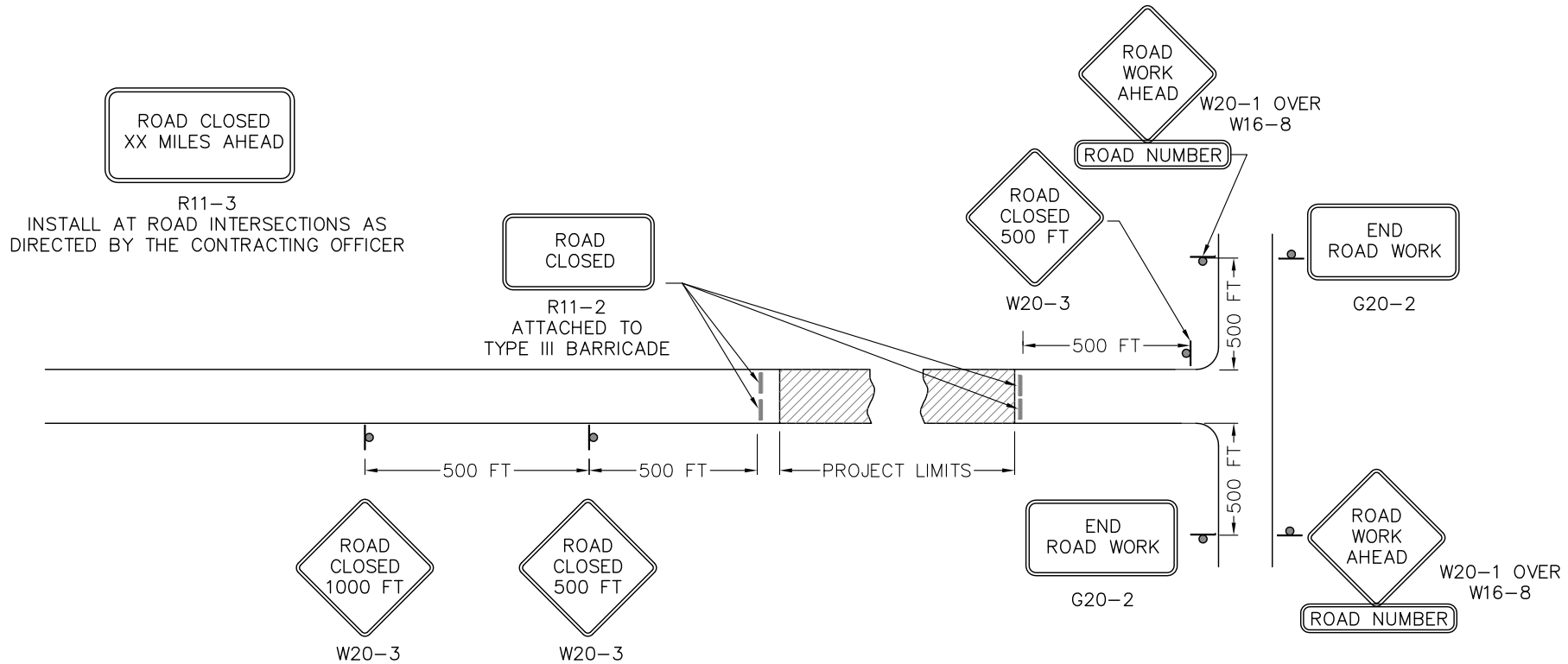


ROAD CLOSURE WITHOUT FLAGGERS

NOTE

1. ERECT ALL ADVANCE WARNING SIGNS BEFORE STARTING CONSTRUCTION WORK.
2. NOT ALL DETAILS SHOWN ON THE TEMPORARY TRAFFIC CONTROL SHEETS MAY BE APPLICABLE TO THIS PROJECT. THE CONTRACTOR MAY ADD OR DELETE INFORMATION AND DETAILS IN THIS TRAFFIC CONTROL PLAN AS NECESSARY TO ACCOMMODATE ACTUAL OPERATIONS WITH WRITTEN APPROVAL FROM THE CONTRACTING OFFICER.
3. WHERE ADVANCE WARNING SIGNS, PLACED AS SHOWN, INTERFERE WITH PERMANENT SIGNS, LOCATE THE WARNING SIGNS AS DETERMINED BY THE CO FOR BEST RESULTS. VARY MESSAGES AS REQUIRED.
4. ADDITIONAL OR DIFFERENT MESSAGE SIGNS MAY BE REQUIRED TO FIT THE ACTUAL CONSTRUCTION CONDITIONS.
5. IF W20–1 IS ON A ROADWAY OTHER THAN THAT ON WHICH THE ACTUAL CONSTRUCTION WORK OCCURS, INCLUDE A SUPPLEMENTARY PLAQUE INDICATING THE NAME OF THE ROAD THE WORK IS ON.
6. IF SIGNS WILL BE IN PLACE MORE THAN 72 CONSECUTIVE HOURS, USE GROUND–MOUNTED POSTS.

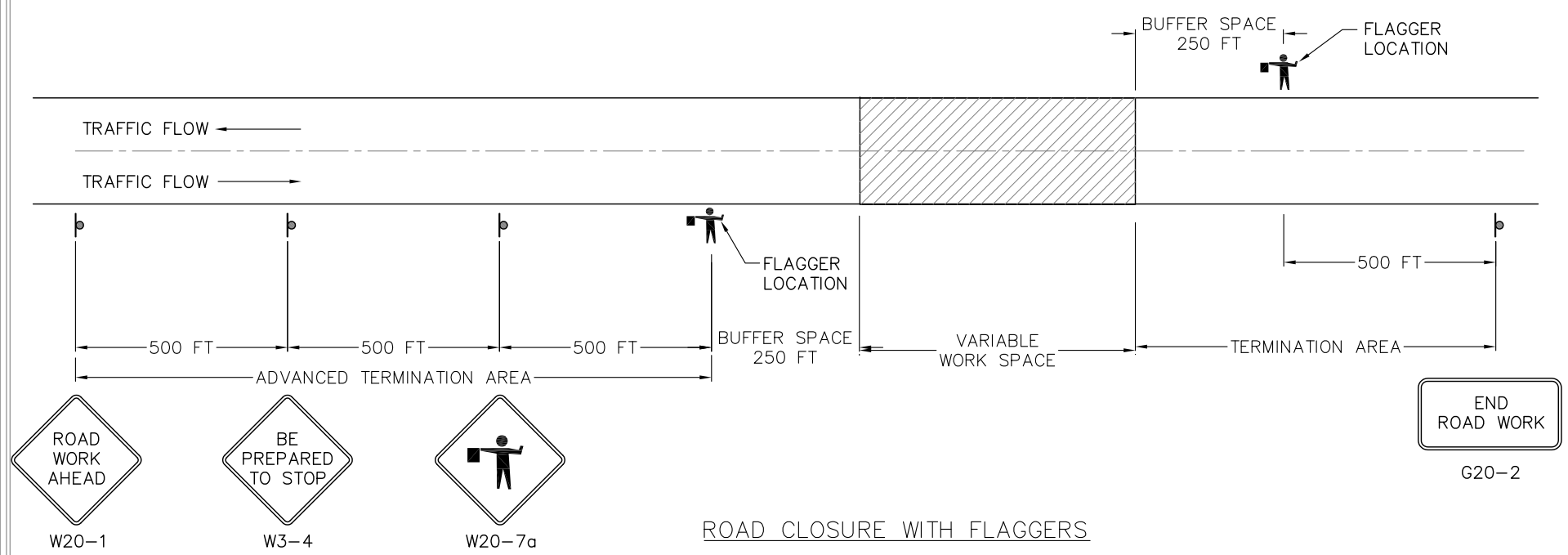


ROAD CLOSURE WITH FLAGGERS

NOTE

1. SIGNS ARE SHOWN FOR ONE DIRECTION OF TRAVEL ONLY. PLACE DEVICES SIMILAR TO THOSE DEPICTED FOR THE OPPOSITE DIRECTION OF TRAVEL.
2. FINAL LOCATION AND SPACING OF SIGNS AND DEVICES MAY BE CHANGED TO FIT FIELD CONDITIONS AS APPROVED BY THE CO.
3. FOR PILOT CAR OPERATION, MOUNT THE "PILOT CAR FOLLOW ME" (G20–4) SIGN AT A CONSPICUOUS LOCATION ON THE REAR OF VEHICLE. PROMINENTLY DISPLAY THE NAME OF THE CONTRACTOR ON THE PILOT CAR.
4. FOR NIGHT TIME FLAGGING OPERATION, PROVIDE FLOODLIGHTING AT FLAGGER STATIONS PER OSHA REGULATIONS.
5. DO NOT ALLOW EQUIPMENT, MATERIALS, OR VEHICLES TO BE PARKED OR STORED IN THE BUFFER SPACE.

DRAWINGS
NOT TO SCALE

U.S. DEPARTMENT OF AGRICULTURE
FOREST SERVICE
R6
PACIFIC NORTHWEST REGION

Forest
ROGUE RIVER-SISKIYOU
NATIONAL FOREST
GOLD BEACH

Design: Lola Coombe
Drawn: Lola Coombe
Checked: P. Podesta
Date: June 2013

Sheet Title:
TEMPORARY TRAFFIC CONTROL -
SINGLE LANE CLOSURE LAYOUT
TOOTH TIMBER SALE

Project No: