SHEET	TOTAL SHEETS

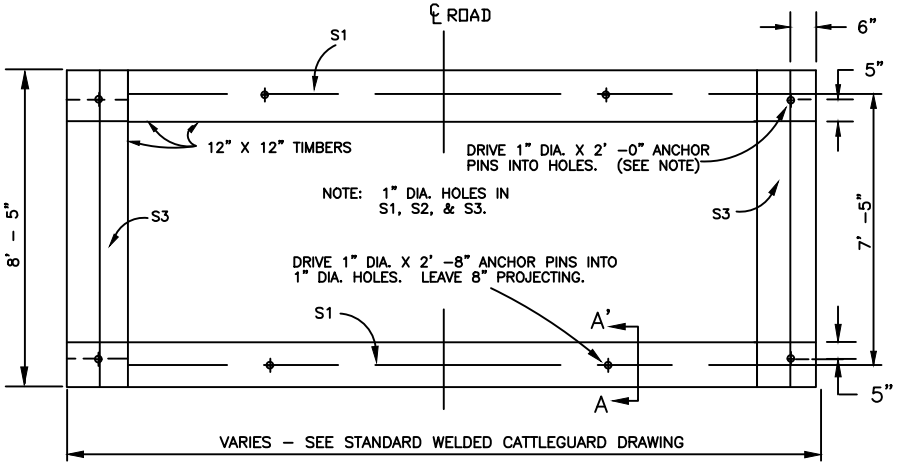

PLAN

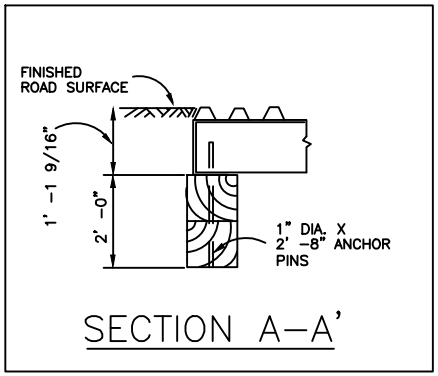

SECTION A-A'

GENERAL NOTES

TIMBER:

TIMBER SHALL BE ROUGH FULL SAWN NO. 1 DOUGLAS FIR OR WESTERN LARCH GRADED ACCORDING TO CURRENT RULES OF EITHER THE WEST COAST LUMBER INSPECTION BUREAU OR THE WESTERN WOOD PRODUCTS ASSOCIATION.

TREATMENT:

AFTER FABRICATION, ALL LUMBER SHALL BE INCISED AND THEN PRESSURE TREATED IN ACCORDANCE WITH AWPA C-2 USING ONE OF THE FOLLOWING TREATMENTS: (1) PENTACHLOROPHENOL MEETING AWPA P-8 USING AN AWPA P-9 TYPE A SOLVENT TO A RETENTION OF 0.6 PCF; (2) CREOSOTE MEETING AWPA P1/P13 TO A RETENTION OF 12 PCF. PENETRATION SHALL BE AS SPECIFIED IN AWPA C-2.

HARDWARE:

ANCHOR PINS SHALL MEET ASTM A-307 GALVANIZED IN ACCORDANCE WITH ASTM A-123.

CONCRETE

COMMERCIAL PRECAST CONCRETE FOUNDATION BLOCKS MAY BE SUBSTITUTED IN PLACE OF TREATED TIMBERS FOR THE FOUNDATION, WHEN APPROVED BY THE C.O.. PRECAST FOUNDATION BLOCKS SHALL MEET AASHTO HS-20 HIGHWAY LOADING REQUIREMENTS. CONTRACTOR SHALL PROVIDE WRITTEN DOCUMENTATION/CERTIFICATION THAT LOADING REQUIREMENTS ARE MET.

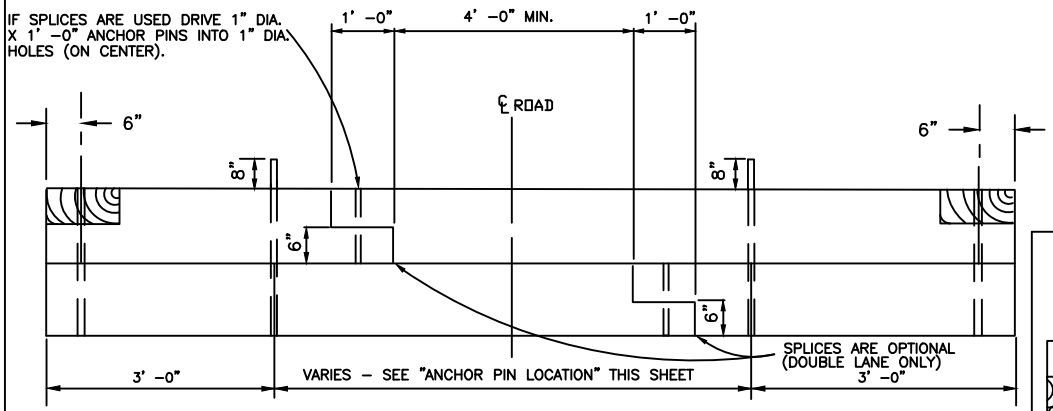

ELEVATION

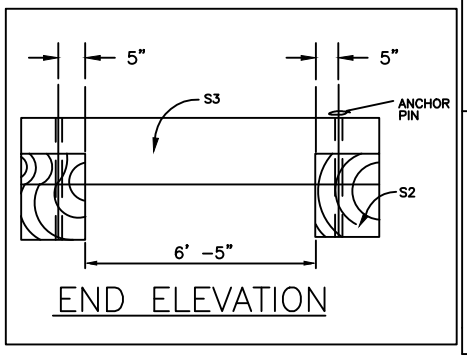

END ELEVATION

ANCHOR PIN LOCATION

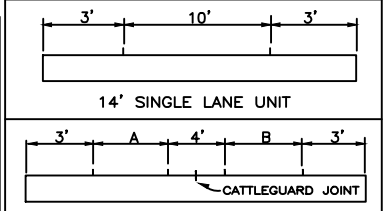

CATTLEGUARD WIDTH	A	B
16'	4'	4'
24'	8'	8'
26'	8'	10'
28'	10'	10'

16' SINGLE LANE UNIT AND DOUBLE LANE UNIT

*DRAWINGS NOT TO SCALE