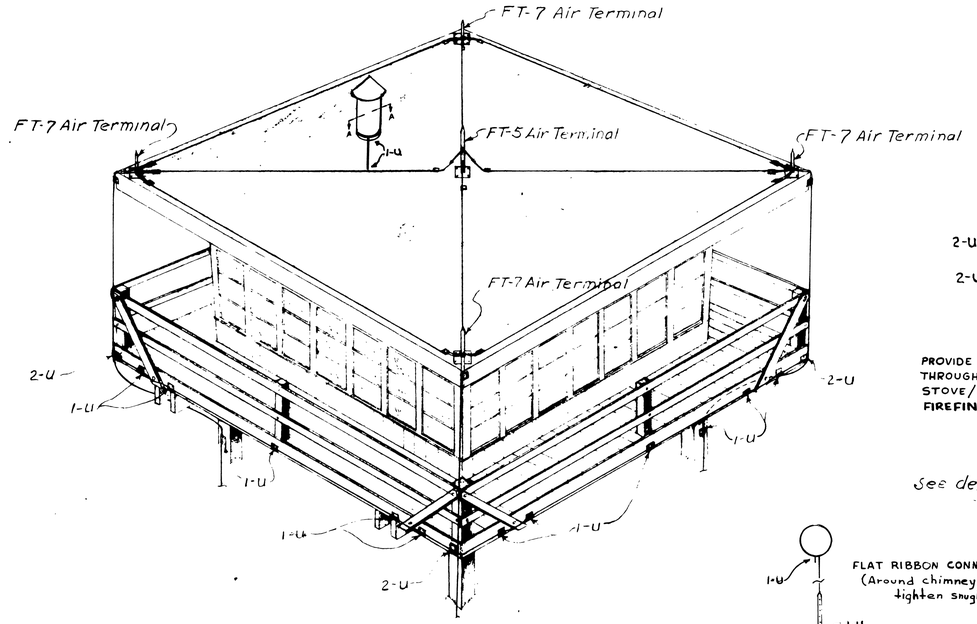

WIRING FOR FLAT TOP HOUSE

SCALE: 1/4" = 1'-0

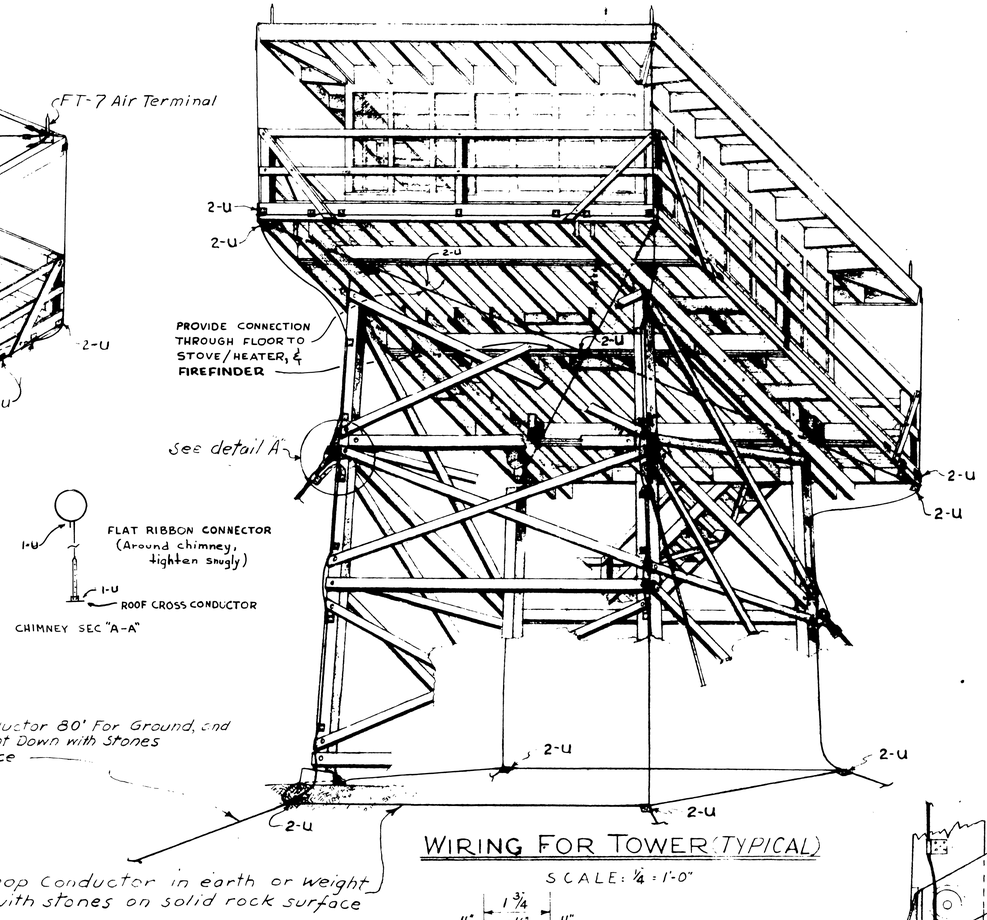

1# = 60 Nails

WIRING FOR TOWER (TYPICAL)

SCALE: 1/4" = 1'-0"

CHIMNEY SEC "A-A"

MATERIAL LIST

	Req'd. 10' CT6 Tower	Req'd. 20' Tower	Req'd. 30' Tower	Req'd. 41' Tower	Req'd. 53' Tower	Req'd. 67' Tower	Req'd. 82' Tower
FT-5 Air Terminal Assembly	1	1	1	1	1	1	1
FT-7 Air Terminal Assembly	4	4	4	4	4	4	4
Type U Connectors	100	110	120	130	140	150	160
1" x 5/16" ø Copper Plated Stove Bolts with Nuts	320	360	400	440	480	520	560
10d Copper Nails, Lbs.	1 3/4	1 3/4	2	2	2 1/4	2 1/4	2 1/2
Ribbon Connectors, Ft.	4	4	12	12	12	12	12
#2 B & S Gage S.D.B. Bare Copper Wire	850'	900'	950'	1025'	1100'	1060'	1250'
TYPE "W" CONNECTORS	—	—	5	5	5	5	5

Notes:

All Wire Conductors Shall Be #2 B & S Gage Bare Copper Wire.

Conductors Shall Be Installed In One Continuous Length Between The Terminals Shown on This Drawing, Unless Permission To Splice a Conductor Has Been Obtained. Splicing May Be Permitted Provided Splices Are Made With Compression Type Sleeves Such as Nicopress.

Fasten Air Terminals and U Connectors To Lookout Structure With 10d Copper Nails. No Conductors Shall Be Installed With Bends Of Less Than 8" R.

CONNECT SAFETY WIRE FENCING TO LIGHTNING PROTECTION SYSTEM TWICE EACH STAIR RUN AS SHOWN ON DRAWING #L 22041. CONNECT CATWALK FENCING TO LIGHTNING PROTECTION SYSTEM AS NOTED ON DRAWING #L22041.

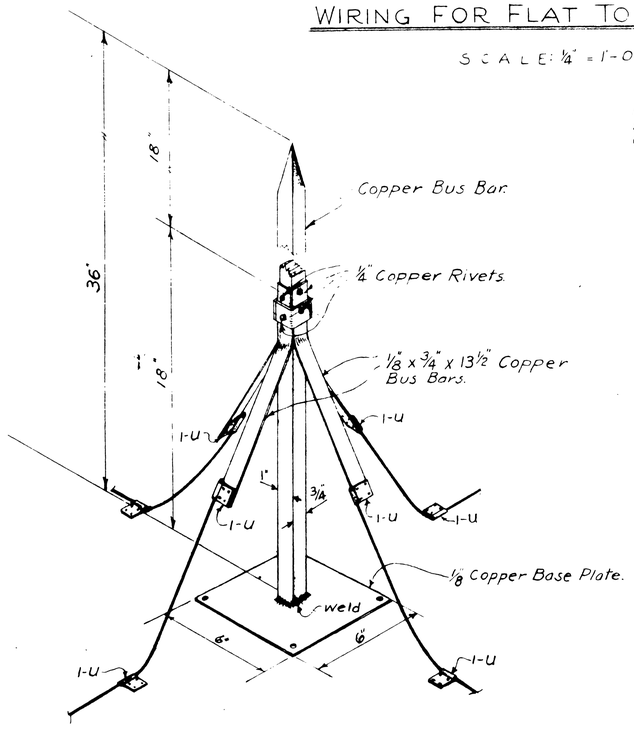

FT-5 AIR TERMINAL

SCALE: NONE

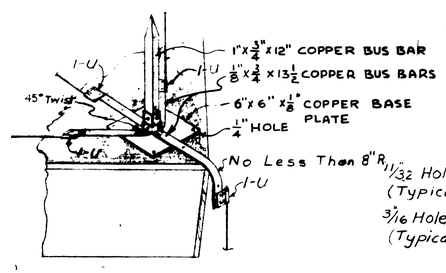

FT-7 AIR TERMINAL

SCALE: NONE

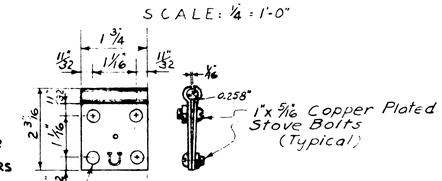

1-U Connector

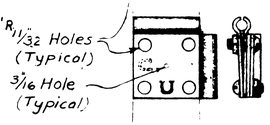

2-U Connector

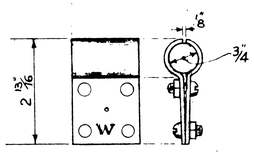

"W" Connector

SCALE: 1/2" = 1'-0"

FABRICATE "U" & "W" CONNECTORS FROM 1/8" COPPER PLATE

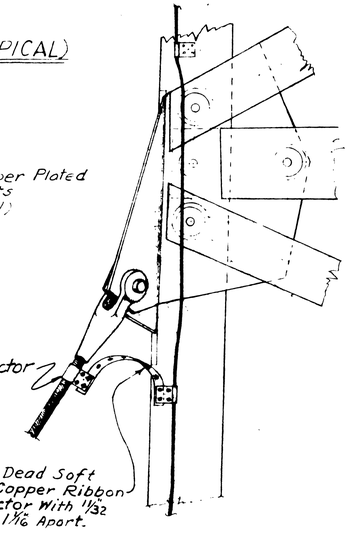

DETAIL "A"

SCALE: 1 1/2" = 1'-0"

11-26-63 ADD STOVE & CHIMNEY CONNNECTIONS
REV. MATERIAL LIST BAH
Revised 6/17/60 - Conductor Bends - C.V.D.

U. S. DEPARTMENT OF AGRICULTURE
FOREST SERVICE
REGION SIX R. F. GREFE REGIONAL ENGINEER

LIGHTNING PROTECTION SYSTEM FOR TT-1 TOWER WITH FLAT TOP HOUSE

DESIGNED O.M.H. DRAWN P.W.C. TRACED
SCALE As Noted CHECKED O.M.H.
APPROVED O.M. Brockwell DATE 2-4-60
ASSISTANT REGIONAL FORESTER

LTL221D1196DD1 SHEET 1 OF 1 L-22101