U.S. Department of Agriculture

Forest Service

National Technology & Development Program

7100—Engineering
0771 1809—SDTDC
June 2007

Remote Monitoring and Control Feasibility

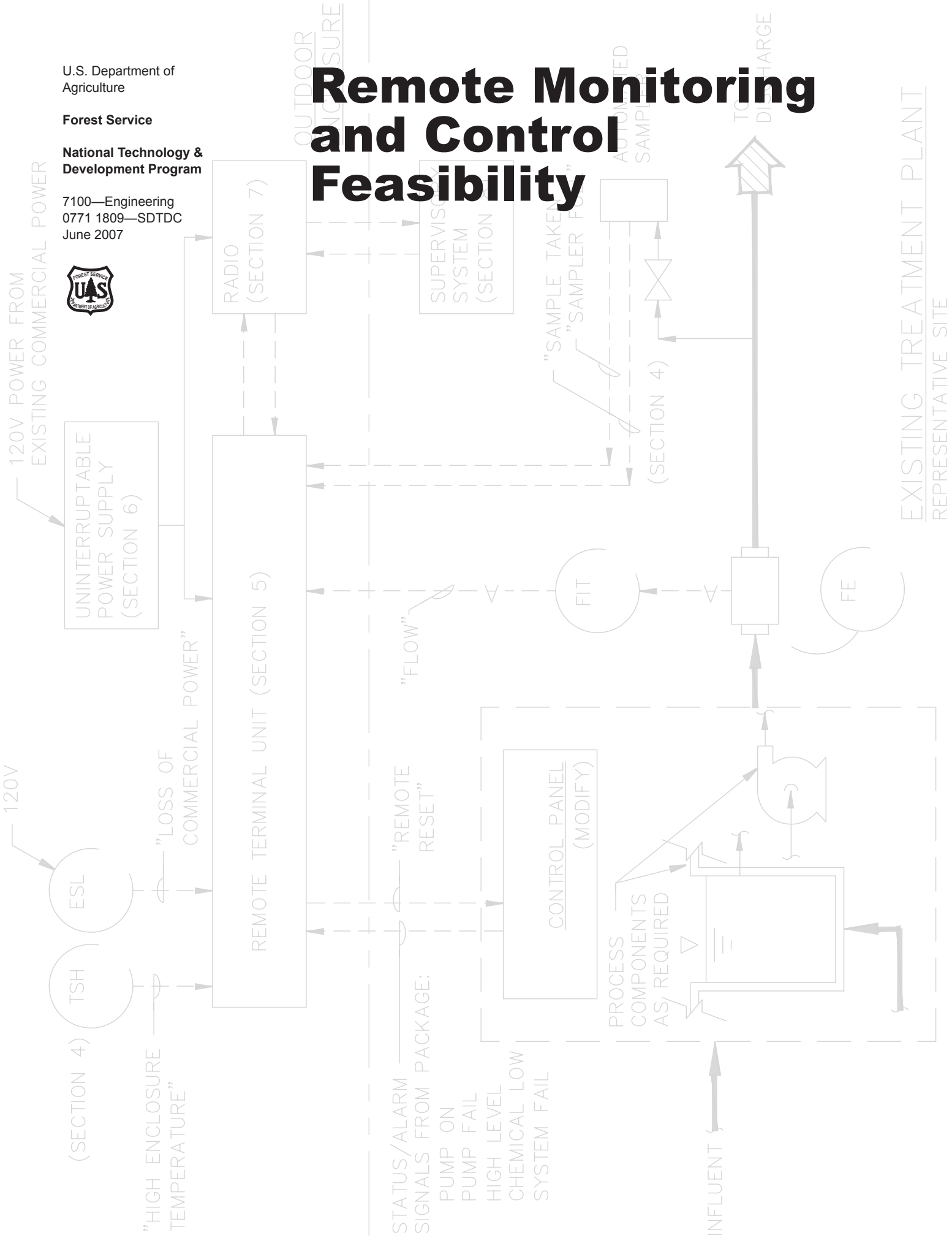

Remote Monitoring and Control Feasibility

by
William V. Crane, P.E., Civil Engineer

U.S. Forest Service
San Dimas Technology and Development Center
San Dimas, CA 91773

June 2007

Information contained in this document has been developed for the guidance of employees of the U.S. Department of Agriculture (USDA) Forest Service, its contractors, and cooperating Federal and State agencies. The USDA Forest Service assumes no responsibility for the interpretation or use of this information by other than its own employees. The use of trade, firm, or corporation names is for the information and convenience of the reader. Such use does not constitute an official evaluation, conclusion, recommendation, endorsement, or approval of any product or service to the exclusion of others that may be suitable.

The U.S. Department of Agriculture (USDA) prohibits discrimination in all its programs and activities on the basis of race, color, national origin, age, disability, and where applicable, sex, marital status, familial status, parental status, religion, sexual orientation, genetic information, political beliefs, reprisal, or because all or part of an individual's income is derived from any public assistance program. (Not all prohibited bases apply to all programs.) Persons with disabilities who require alternative means for communication of program information (Braille, large print, audiotape, etc.) should contact USDA's TARGET Center at (202) 720-2600 (voice and TDD). To file a complaint of discrimination, write USDA, Director, Office of Civil Rights, 1400 Independence Avenue, S.W., Washington, D.C. 20250-9410, or call (800) 795-3272 (voice) or (202) 720-6382 (TDD). USDA is an equal opportunity provider and employer.

Table of Contents

Introduction 1
Site Design Process 2
1. Assess site operational requirements 2
2. Determine opportunities for remote monitoring and control 3
3. Estimate costs of monitoring and control 3
4. Estimate costs of supervisory system 4
5. Estimate savings resulting from monitoring and control 4
6. Calculte benefit-cost ratio resulting from monitoring and control 4
7. Identify other benefits (intangibles) of monitoring and control 4
8. Iterate 5
9. Implement 5
Conceptual Designs for Monitoring and Control 5
Five elements of monitoring and control 5
1. Monitoring devices 8
2. On-site electronics, cost estimates, strengths and weaknesses 13
3. Electric-power sources 14
4. Communications 16
5. Supervisory system 18
Summary and Conclusions 20
Appendix A—Background 21
Appendix B—Example problem: Remote monitoring systems analysis 25
Design process 25
1. Assess site operational requirements 25
2. Determine opportunities for remote monitoring and control 25
3. Estimate costs of monitoring and control 26
4. Estimate costs of supervisory system 27
5. Estimate savings resulting from monitoring and control 28
6. Calculate benefit-cost ratio resulting from omonitoring and control 28
7. Identify other benefits (intangibles) of monitoring and control 29
8. Iterate 30
9. Implement 30
Credits 31

Introduction

What is remote monitoring and control and why is this important? It is the ability to monitor and/or control what is happening at a remote location, or the ability to gather data at a remote location to be retrieved later, or gather the data from a remote location and transfer it to where you are. Remote monitoring and control is becoming increasingly important as environmental laws become more stringent and decreasing funding effectively cuts our available workforce. This publication provides a decision tool to use when considering the feasibility of remote monitoring and control. This study is based on a wastewater treatment example, and the principles are common to many other systems, such as water treatment, wells, pumping systems, and alarm monitoring of any kind. The communications and supervisory sections apply to any remote monitoring or control. The goal is to provide a decisionmaking tool to determine if remote monitoring and control will provide an economically feasible solution where none currently exists. A secondary benefit is to provide a tool to plan and budget for monitoring and control systems. The tool is very general because there are a wide variety of situations where it may be useful. Use standard engineering principles and judgment in evaluating the site parameters to provide the most cost effective monitoring and control system for each specific site. Include these factors (as a minimum) in your study:

- Specific operational characteristics of the facility and the site.
- Regulatory requirements.
- Staffing levels and expertise.
- Geographic location.
- Nature and frequency of events where monitoring and control could be useful.

Potential benefits of remote monitoring and control at any site include the following:

- Fewer operator site visits to meet regulatory requirements.
- Fewer operator site visits for normal monitoring.
- Fewer emergency site visits with remote control or reset of failed systems.
- Better use of scheduled site visits as opposed to emergency visits through use of operational data collected to help forecast problems and required maintenance.
- Faster (or at least quick) response to regulatory violations.
- Better planning and priority setting for maintenance and capital projects. Remote monitoring could give the Forest Service, U.S. Department of Agriculture, a more complete picture of system operations, problem areas, and performance.

Remote monitoring and control allows certified operators to operate more than one system (depending on size, complexity, and geographic location), resulting in more flexibility within the local organization to provide time for employee training, time off, etc. Remote monitoring and control also provides useful and cost-effective solutions, such as pump restarts caused by power outages, alarm monitoring, remote system emergency shutdown, and general historical datalogging. Some of these benefits extend beyond wastewater systems and are useful for monitoring other critical systems, such as water treatment plants, as well as wells and pump systems.

The publication's intent was to look at general conditions at potential project sites. Because the regulatory requirements and other issues and constraints are site specific, the reader will need to evaluate the specific site's details and apply engineering and technical judgment in his or her evaluation.

The report divides the proposed monitoring system into five elements. Match each element of the system to your site's specific requirements. These elements cover monitoring devices for the local system; onsite electronics; local site power; infrastructure to transmit data; and central supervisory system(s) remote from the sites to provide monitoring, control, or datalogging of the local system (see figure 1). This publication describes appropriate monitoring and control provisions for wastewater treatment and disposal systems, and provides basic system architectures used with wastewater treatment and disposal systems that are often used for other types of monitoring and control systems as well. The basis for cost estimates is calendar year 2005. Actual system costs will depend on the characteristics of individual sites, parameters monitored and/or controlled, when work is completed, local labor costs, travel time to the site, and so forth.

For complete details of the background information search, including a Forest Service Infrastructure application (INFRA) query, request for information, personal interview, and Internet search, see appendix A.

SITE DESIGN PROCESS

This section provides a general framework to decide what (if any) site conditions warrant remote monitoring and control. This section only covers site-by-site decisions, and assumes that supervisory monitoring provisions at central location(s) are available to accept the data. Be sure to include costs for the supervisory system when calculating the benefit/cost ratio if there is a cost (i.e., there is no existing supervisory system or there is a cost to upgrade an existing system). See appendix B for an example illustrating the analysis of a remote monitoring system using the following steps:

1. Assess Site Operational Requirements

Most Forest Service wastewater systems are small. Flows under 50,000 gallons per day are common, although there are a few systems with flows as high as 150,000 gallons per day. Many facilities use relatively unsophisticated wastewater technology, such as ponds, leach fields, and pump stations. Some facilities have package treatment plants, such as activated sludge. We classified the systems as shown in table 1. Note that the first three systems operate passively and probably will not justify remote monitoring except in special cases.

For the site under consideration:

- Confirm what discharge permitting requirements apply (if any) and how compliance is demonstrated.
- Evaluate the frequency of site visits required for site operation, and document work items performed at these site visits.

When evaluating the number of visits an operator must make to any site, consider the following:

- Site visits required to meet regulatory requirements.
- Site visits required for normal monitoring.
- Site visits for emergencies.

Table 1. Summary of wastewater site classifications

Classification	Normal Operating Requirements				
	Regular Maintenance Required	Ongoing Monitoring Required	Local Automatic Control	Passive Operations	Typical Interval For Site Visit
Vault				✔	Semi-Annually or more during peak use
Composting Toilet				✔	Daily or Weekly
Septic System and Leach Field Without Pumping				✔	Annually
Pumping Systems (As for a pressure leach field, mound, conveyance to sewer, etc.)			✔		Monthly
Lagoon System		✔			Weekly
Treatment Plant	✔	✔	✔		Daily

2. Determine Opportunities for Remote Monitoring and Control

Candidates for remote monitoring and control include:

- Pumping systems (including septic system pumps).
- Lagoon treatment systems.
- Mechanical treatment plants.

Passive systems, such as the Forest Service's barge-holding systems in Region 10 and vault systems shown in table 1, are not suitable for extensive monitoring, but may be candidates for liquid-level monitoring.

3. Estimate Costs of Monitoring and Control

When estimating costs, use the budget figures provided later in this document, with adjustments to reflect local site conditions, procurement method, and cost escalation for inflation after 2005. Small projects for remote sites are generally more expensive because of higher site-access costs. In comparison, a larger

project near qualified installers will likely be closer to market rates. As an alternative, work done by Forest Service personnel (force account)—if time and manpower permit—would be less expensive than contracted alternatives. Consider the various procurement and construction options and their characteristics during the estimating process.

If the planning process suggests that the improvements are justified, perform a more detailed cost estimate to ratify the basis of the decision.

4. Estimate Costs of Supervisory System

This step depends on several factors—if this is a new system, the entire cost of the supervisory system must be included in the benefit-cost ratio. If there is an existing system, the site monitoring cost plus any additions or modifications to the existing supervisory system must be included when calculating the benefit-cost ratio. The cost also depends on what you want the supervisory system to do. Costs vary from a few hundred dollars to $1,000 for simple systems to several thousand dollars or more for sophisticated systems.

5. Estimate Savings Resulting from Monitoring and Control

This step consists of estimating a dollar value for the savings from implementing monitoring and control. Reductions in labor and travel are the principal savings (estimate the number of trips saved). Other potential savings are avoided costs that include less use of outside services, unplanned emergency site visits, avoided fines, etc.

6. Calculate Benefit-Cost Ratio Resulting from Monitoring and Control

Once all benefits have been assigned a dollar value and costs have been estimated for the monitoring system, you can determine the system's benefit-cost ratio. The benefit-cost ratio is the benefits dollar value divided by the costs dollar value over the analysis period. Any project with a benefit-cost ratio of more than 1.0 is cost effective. To complete the benefit-cost analysis, you need to make the following comparison:

- Potential annual savings from the monitoring project.

compared to

- The initial capital cost plus the annual operations and maintenance cost of a monitoring project. (Be sure to include any costs associated with implementing a supervisory system or modifying an existing system to accommodate the proposed monitoring system.)

This cost-savings comparison is usually an equivalent annual cost. Amortize one-time capital costs over the system's useful life and add them to the ongoing annual costs (or savings). Textbooks on economics can provide additional information for selecting other useful project life spans or interest rates if desired.

7. Identify Other Benefits (Intangibles) of Monitoring and Control

This step identifies other monitoring and control benefits, which perhaps do not lend themselves to a dollar value, but which would result from better planning and scheduling if monitoring and control is in place. Possibilities include:

- Scheduled versus emergency maintenance.
- Making better use of forest staff time.
- Prioritizing work, particularly in times of short staff and/or multiple problems.
- Realizing other benefits. (Thoroughly analyze the site and operation to identify all potential benefits.)

Emergency callouts are disruptive and usually entail a cost greater than the calculated cost. Other benefits could include increased knowledge gained from system monitoring, more efficient application of resources, better tracking of equipment run time, and hence better maintenance planning. These and other benefits that may result from a remote monitoring and control project have value that is difficult or impossible to quantify, yet can provide good reasons to implement projects that may have benefit-cost ratios less than 1.0.

8. Iterate

With the dependencies between the choices in each category, it is good practice to review earlier steps and reconsider your approach to each solution in the site-design process. The goal is to develop arrangement(s) which are likely to pass the test of benefit-cost decisionmaking.

The instrumentation selections include both analog and discrete level monitoring. Analog monitoring is generally expensive and could be deleted for economy. (Weigh the benefits of analog monitoring with its cost to determine whether to use it or not.) We also made assumptions on how many site trips could be eliminated based on the improvements. Revisit these assumptions during the iteration process to determine if the analysis is sensitive to any of the assumptions and the cost effectiveness of the overall approach. If the analysis is particularly sensitive to any of the assumptions, be sure to go back one more time and assure yourself that the rationale for your assumptions is correct.

9. Implement

In the example problem (appendix B), the project is well justified by the cost and the monetary and nonmonetary benefits.

Table 2 summarizes the analyses characteristics for each major site type considered in this report.

CONCEPTUAL DESIGNS FOR MONITORING AND CONTROL

This section presents conceptual designs of monitoring systems. These conceptual designs are tailored to fit the site categories. Their monitoring requirements were shown in table 1.

Five Elements of Monitoring and Control

Divide monitoring and control into these basic elements:

1. Monitoring devices.
2. Onsite electronics.
3. Electric power source.
4. Communications.
5. Supervisory system.

Each element is a function of site-specific characteristics. The products we discuss are representative of a variety of manufacturers and models. During the design make product selections to solve site-specific problems. In addition to technical capabilities, consider other factors such as price, availability, warranty, product support, and existing products at other Forest Service installations.

We also address systemwide supervisory monitoring, with conceptual designs of a base supervisory system suitable to support initial installations and an ultimate supervisory system that may be appropriate as the list of connected sites grows.

Figure 1 shows the schematic arrangement of all elements in a block diagram. Figures 2 and 3 show conceptual designs for representative sites. These conceptual designs do not represent

Table 2—Example Approaches to Analysis Sequence

Specific Projects Require Site Specific Engineering and Economic Analysis and Judgment to Determine the Best Approach

Analysis Step	Typical Scenarios			
	Septic Tank/Leach Field System	**Pumping Facility**	**Lagoon Treatment System**	**Package Treatment System**
1: Assess Site Operational Requirements	Gravity septic tank and leach field system typically requires seasonal or annual tank and field inspection, and may include ground water elevation monitoring.	Remote pumping systems are associated with pressure distribution type leach fields, wastewater pumping stations, sump pumps, well pumps, and other facilities.	Lagoon systems commonly have pumping systems that would be analyzed under the pumping scenario. Lagoons also often have aeration systems and require periodic sampling.	There is a wide variety of package treatment systems including continuous feed activated sludge plants, sequencing batch reactors, microfiltration systems, and many others. The selection of a package treatment system depends on engineering analysis of a particular situation and assessment of alternatives.
2: Determine Opportunities for Remote Monitoring and Control	There are likely very few practical opportunities for remote monitoring and control. In some cases, a high level alarm in a septic tank could be warranted. A local alarm/light could also be provided.	The main causes of pumping facility problems are due to motor or other electrical failures, blocked downstream piping, excess flow into a facility, and power source fluctuations. The first three conditions can be monitored by relatively simple level monitoring systems and provide a local and/or remote failure alarm and potentially a backup pumping system that could come on line automatically or by remote operation. Power source fluctuations can cause equipment to shut down and it can often be restarted remotely. Pump stations can also be monitored for flow, and/or run time hours.	Aerator operation can be programmed locally at a control panel based on a timer, can be programmed to operate based on dissolved oxygen levels determined through a probe, and could also be monitored and controlled remotely. In addition lagoons systems could have weekly or daily sampling requirements and automated samplers can be used, if the sampling frequency is greater than typically needed for other operator visits. Level alarms could also be provided to monitor pond elevation, and other monitoring could be provided in the disposal area.	Package treatment plants typically come with an on board electronic control package. If working with a future opportunity, the capabilities of the control package should be carefully evaluated relative to permit requirements, and site specific characteristics. The on board control package should be capable of communicating with other local control systems and with remote monitoring and control systems. Typically these systems monitor parameters that are specific to the treatment system and may include flow, dissolved oxygen, run time, pressure or vacuum, mechanical systems status, and other parameters. Automated sampling is also possible.
3: Estimate Costs of Monitoring and Control	The cost of monitoring depends on the approach. A simple alarm and a telephone dialer for a high level alarm are relatively inexpensive, and a local alarm/light is likely even less expensive.	The cost of monitoring and control depends on the approach. A simple alarm and a telephone dialer for a high level alarm to identify a pump problem is relatively inexpensive, at a reasonable distance from the facility and a local alarm/light is likely even less expensive. For some systems, standby pumping capacity and automatic backup could be warranted. Remote restart requires somewhat more sophisticated electronics and cost depends on the system and options selected.	The cost of monitoring depends on the approach. A simple remote monitoring system is relatively inexpensive. Dissolved oxygen probes add cost to a control system. There is a wide variety of automated sampling equipment available on the market depending on the site specific needs (number of bottles, size, refrigerated or not, control system capabilities, etc.).	The cost of the overall monitoring and control system depends on the capabilities of the on board electronic control package, other local control systems, and the capabilities and features that are desired from a remote monitoring and control standpoint and if automated sampling is used..

Table 2—Example Approaches to Analysis Sequence—*continued*

4: Estimate Savings Resulting From Monitoring and Control	Potential savings could come from avoided fines, avoided operator time responding to a problem calculated over a typical year. Savings could also come from potentially extended life of a leach field due to avoiding a problem situation, such as leachfield plugging, which may be detected through a high tank level alarm.	Savings, for example, can be estimated based on how much extra time an operator must spend in a year going to a remote site to perform a motor restart. Avoided fines, and avoided costs associated with the downstream effect of a failed pumping system also represent potential savings	Savings depend on avoided costs of operator time, potential fines, downstream problems, and other factors	Savings will depend on the potential incremental improvement of efficiency and avoided costs resulting from additional remote monitoring and control capabilities. Package treatment systems often require frequent operator monitoring and to the extent this can be done remotely, then cost savings could be realized and could be calculated for the specific application.
5: Identify Other Benefits of Monitoring and Control	Other potential benefits could include improved relationships with permitting agencies due to closer monitoring of the situation, avoided problems at facilities due to plugging and system failures, better protection of ground water, and others depending on site circumstances and regulatory and operational requirements.	Monitoring pump station operation, flow, or run time hours can provide valuable data for evaluating overall system operation characteristics. For example, run time hours on a leach field pump can be correlated to water use records to determine if there is a ground water infiltration problem into the septic tanks. Flow monitoring can also be used at wastewater pump stations for evaluating wet weather flows and determining if there are problems with the collection system.	More monitoring of a lagoon treatment system can provide better operations and better compliance with treatment requirements. It can also lead to better protection of ground water and surface water, as well as potentially reducing odors.	Even more so than for a lagoon system that is relatively forgiving, more monitoring of a package treatment system can provide better operations and better compliance with treatment requirements. It can also provide better life of certain components, like filter membranes, when they are carefully used in accordance with the manufacturer's recommendations. Better protection of the environment could also be afforded through better operation of a treatment system..
6: Estimate Cost of Supervisory System.	If this is a new system, the entire cost of the supervisory system must be included in the benefit-cost ratio. If there is an existing system, the cost of the site monitoring plus the any additions or modifications to the existing supervisory system must be included when calculating the benefit-cost ratio			
7: Calculate Benefit-Cost Ratio	Benefit cost ratio is calculated based on the total estimated savings divided by the total cost using an equivalent annual cost approach. The equivalent annual cost is arrived at by adding the recurring annual costs to the amortized capital cost using the capital recovery factor for the useful life and discount rate selected. With a discount rate of 6 percent per year and 10 years, the capital recovery factor is 0.1359, which is multiplied by the capital cost to yield the amortized cost.			
8: Iterate	Reevaluate potential opportunities based on insights and knowledge gained through the initial assessment and retest governing conditions, assumptions, and options.			
9: Make Cost/ Benefit Decision	Make implementation decisions based on up front costs, annual operations costs, avoided costs, and other economic and noneconomic benefits. I many cases, it may make most sense to begin with a basic system with expansion and upgrade capabilities so that the system can grow with the needs.			

any particular sites, but are generic in nature to illustrate possible combinations of components. Figure 4 on page 19 shows a conceptual design of a supervisory system. The following sections discuss options for each element.

1. Monitoring Devices

At a minimum, candidates for remote monitoring and/or control include:

- Pumping systems.
- Lagoon treatment systems.
- Mechanical treatment plants.
- Others such as wells, water systems, remote site alarms (smoke and fire, door-open, or power).

This section develops a list of monitoring and control devices shown in table 3 that are applicable to sewage treatment sites.

Liquid-Level Monitoring Switch

You can accomplish discrete level monitoring using float-type level devices. For lift stations, float switches operate high- and low-level switches for alarm or automatic lift pump start and stop as illustrated in figure 2.

The float-type level devices are reliable and easy to maintain. In many applications, such as the lift station example, the pump manufacturer provides the floats and appurtenances as part of the pump package. Equipment and system condition monitoring of ON status, OVERLOAD, or other equipment or system statuses typically require monitoring of auxiliary contacts or other existing provisions within these devices.

Table 3. Process monitoring devices and estimated capital and overhead and maintenance costs

Function	Applicability			Costs (In 2005 Dollars)	
	Process Control	Regulatory Compliance	USDAFS Internal Use	Capital (Installed)	O&M ($/Year)
Equipment/system condition monitoring	✔	✔	✔	$ 100	$ 50
Level monitoring switch	✔		✔	$ 200	$ 50
Analog level monitoring	✔		✔	$1,200	$200
Discrete position monitoring	✔		✔	$ 200	$ 50
Analog flow monitoring	✔	✔	✔	$2,500	$200
Dissolved oxygen monitoring	✔		✔	$2,000	$200
Suspended solids monitoring	✔	✔	✔	$2,500	$500
Turbidity monitoring	✔	✔	✔	$2,500	$500
pH Monitoring	✔	✔	✔	$2,500	$200
Automated sampler		✔	✔	$7,000	$500
High temperature	✔		✔	$ 200	$ 50
Remote reset/restart	✔		✔	$ 200	$ 50
Electric power monitoring			✔	$ 200	$ 50
Intrusion/fire monitoring			✔	$ 400	$ 50

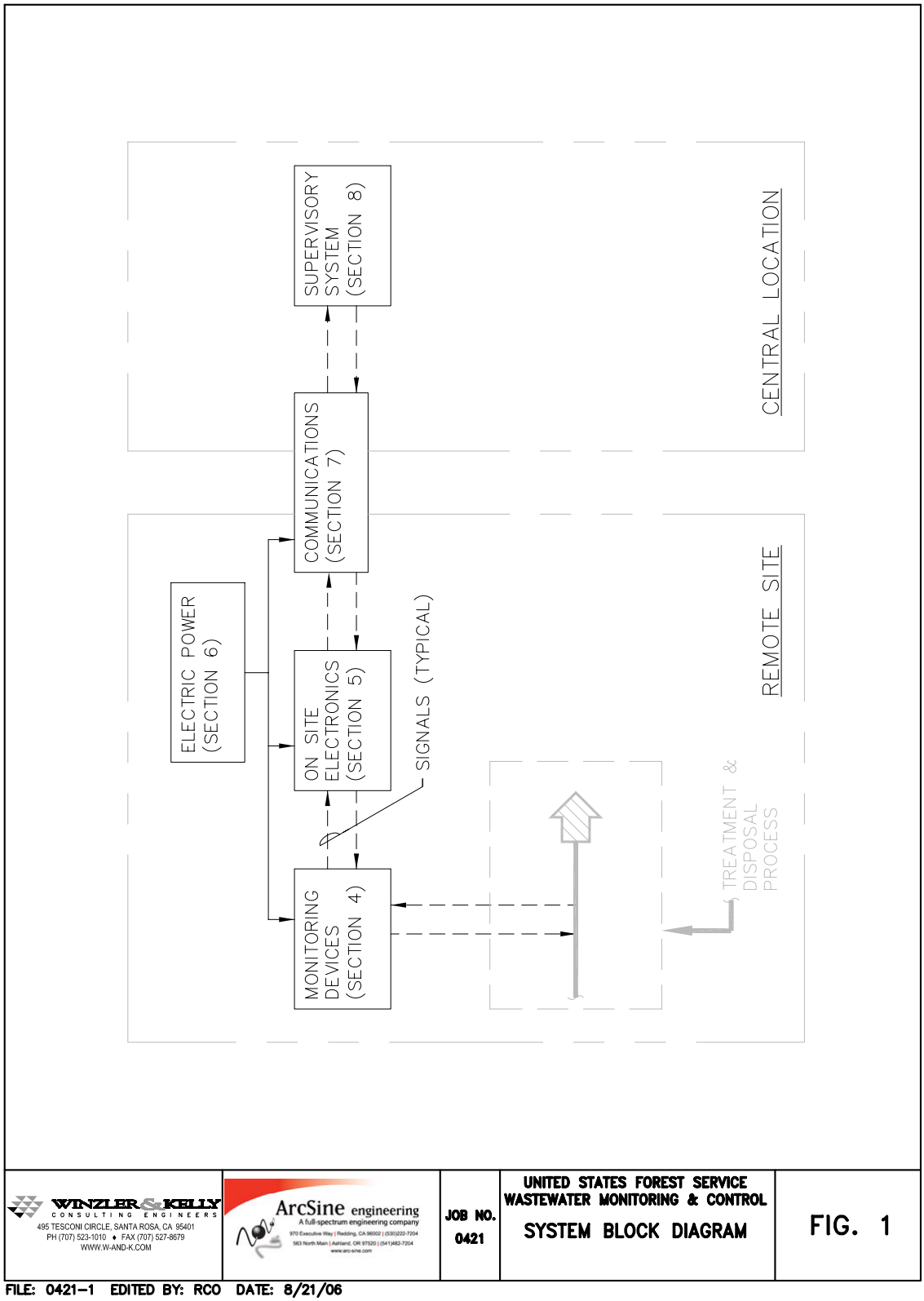

Figure 1. System block diagram.

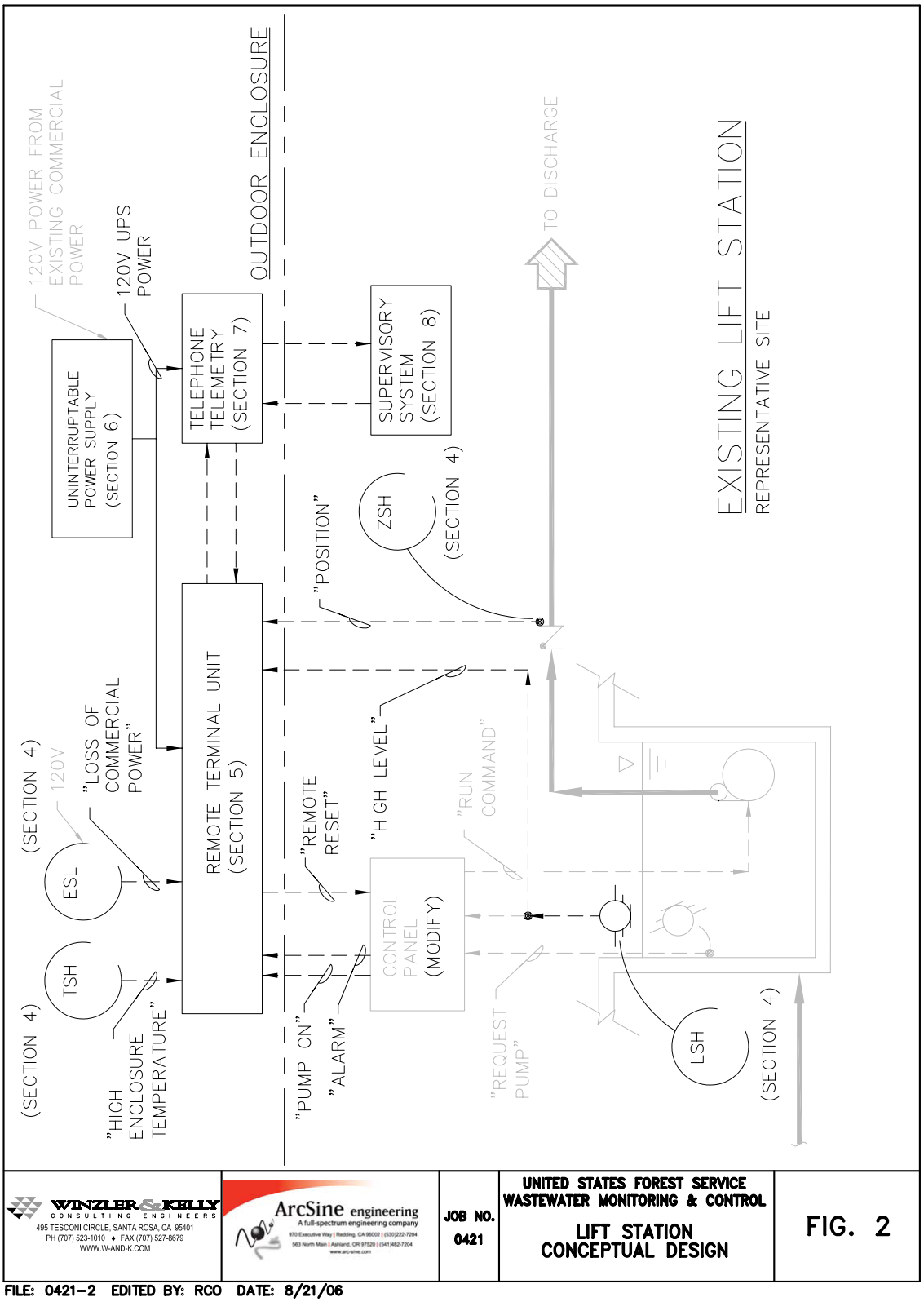

Figure 2. Lift station conceptual design.

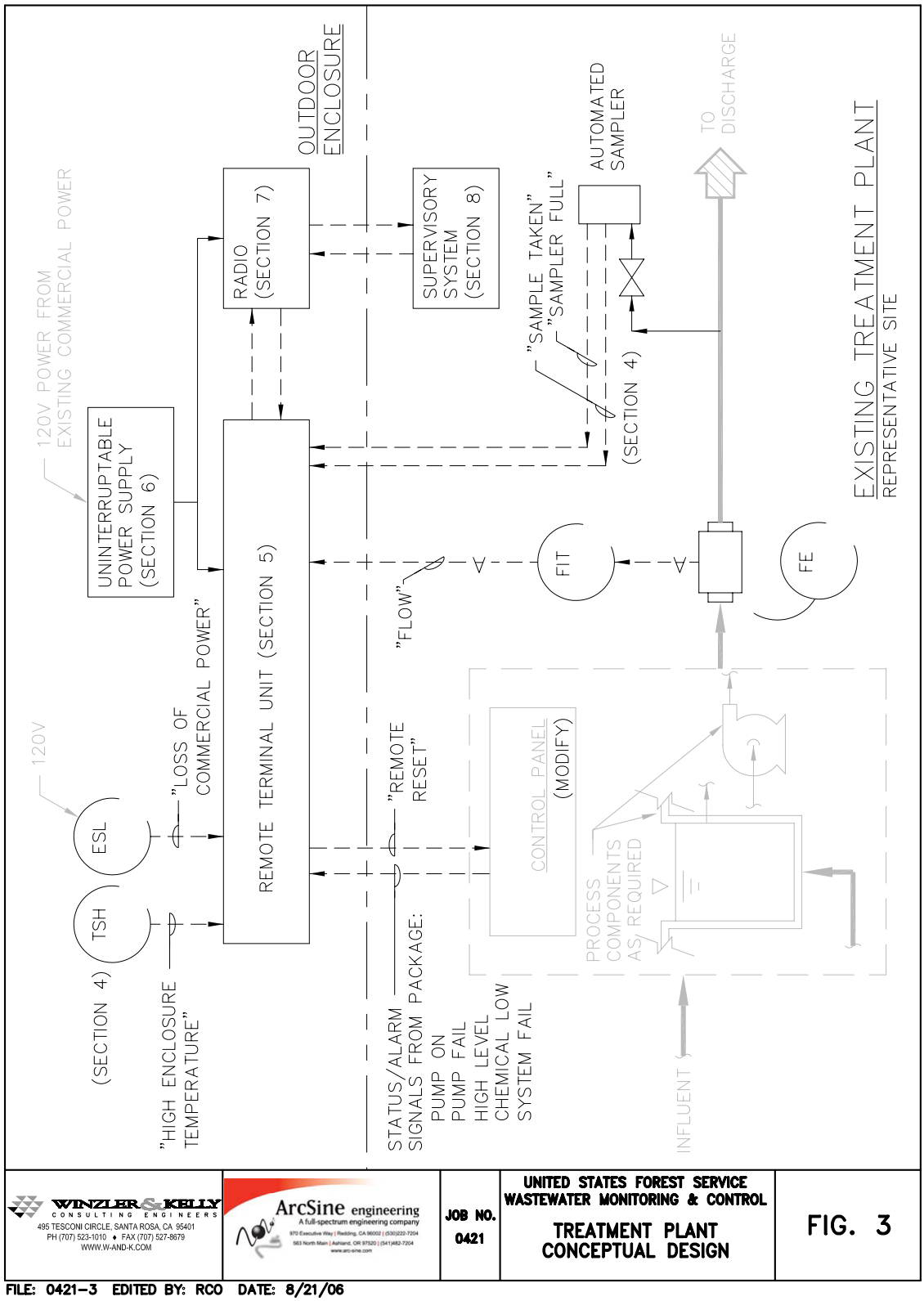

Figure 3. Treatment plant conceptual design.

Analog-Level Monitoring
Variable-speed pumps use analog level measurements for both on/off and speed control. The control algorithm is implemented in a stand-alone controller or in a remote terminal unit (RTU).

There are several level transmitters used in wastewater applications including:

- Ultrasonic, which uses sound to determine the liquid level.
- Air-bubbler, which uses air pumped through a small tube submerged in the liquid—differences in air pressure determine liquid level.
- Submersible level transmitter.

Some users prefer the ultrasonic-level transmitter because it makes no contact with the sewage itself—as does the submersible level transmitter—and it does not require an air purge for its operation as does the bubbler.

Discrete-Position Monitoring
Use discrete-position monitoring to determine if a valve is open or closed. Figure 2 illustrates the discrete-position monitoring of the check valve.

Analog-Flow Monitoring
Wastewater-treatment applications often use electromagnetic flow transmitters (magmeters) to measure flow rate. They have no moving parts, low pressure loss, and little or no wear and tear on components. They are available in many sizes.

The installed cost and the maintenance costs are comparable with alternative flow measuring devices, such as ultrasonic doppler flowmeters or ultrasonic time-of-flight flowmeters.

Analytical Instrumentation
Several analyzers continuously determine values for variables, such as dissolved oxygen, suspended solids, turbidity, and pH, with the objective of controlling the treatment process and/or satisfying regulatory compliance. Many wastewater analyzers are expensive. They may also require periodic cleaning and/or reagent replacement.

Biochemical (biological) oxygen demand (BOD) is typically determined in the laboratory using a 5-day test procedure; continuous analysis of BOD is not practical using remote monitoring equipment.

Some analytical measurements are achieved by lab test procedures (e.g., pH, dissolved oxygen, BOD, total suspended solids (TSS), and turbidity). Some analytical measurements are achieved by portable or onsite instruments (e.g., pH, DO, TSS, and turbidity).

Automated Sampler
Samplers satisfy regulatory compliance. They collect samples of treated wastewater for laboratory analysis. The lab analysis is "after the fact," and the sampler may be refrigerated or filled with ice to keep the samples fresh for subsequent analysis.

Samplers collect wastewater on either a timed basis or in proportion to plant flow rate. They place the wastewater samples in one bottle (composite sampler) or several bottles (discrete samplers).

After collecting the wastewater samples, transport them to the laboratory where the samples will be analyzed to determine BOD, turbidity, and pH.

High Temperature
Pump motors—larger than 5 horsepower—can be equipped with high-temperature switches to detect motor faults.

Monitor the enclosure's temperature with temperature switches and alarm accordingly. This helps to prevent damage to electronic components housed in the enclosure.

Remote Reset or Restart
Exercise caution. Evaluate remote restart on a case-by-case basis. You may want to make a site visit (in many cases) to prevent potential equipment damage from attempting an unsupervised restart. You can restart pumps remotely after resetting the fault by designing the correct relay circuit. You can also reset faults, such as "motor temperature high," remotely by designing the appropriate relay logic circuit (RTU) program. However, if a motor is tripping out because of current overload, there is probably an underlying cause that should be investigated before restarting the pump. Other remote restarts are appropriate, such as resetting trips resulting from transient conditions in commercial power.

Electric-Power Monitoring
Use relays to monitor the availability of commercial power at all branch circuits servicing the remote-site loads. By monitoring power, the operator can differentiate between nuisance trips and faults, such as over heating or high-current draw. The operator can reset nuisance trips remotely following power restoration.

Intrusion or Fire Monitoring
The enclosure housing monitoring devices and onsite electronics can be equipped with intrusion-detection switches, allowing signals such as "door open" to be sent to the RTU and to the central location.

There are also smoke and fire detectors available to connect to the RTU that will provide an alarm for smoke or fire.

2. Onsite Electronics, Cost Estimates, Strengths and Weaknesses
Once process conditions are "monitored" onsite, the operator needs to collect the data. This section addresses available options and their tradeoffs. All cost estimates are in 2005 dollars. The operation and maintenance costs are for single-purpose trips to the site. If the trips' purposes can be combined with other functional trips, the net operation and maintenance cost can be lower. These costs are used in the example problem in appendix B.

Hardcopy Recorders

Description: Hardcopy recorders, also referred to as chart recorders, are onsite data-acquisition devices. They collect and chart the data and chart them on paper. Some of the devices store information to memory or a portable storage device that the operator can download to a computer.

Cost: The estimated installed capital cost is $3,000. Yearly maintenance costs are estimated between $50 (paperless recorder) and $500 (strip-chart recorder).

How data are acquired: Recorders are real-time data-collection devices that are configurable to several analog inputs. The inputs are instantly viewable on paper or electronic screen, and saved to memory or a floppy disk.

Strengths: Recorders are easy to maintain and use, and are ideal for capturing and viewing data in a table or waveform format.

Weaknesses: Recorders do not allow for data processing and control.

Environmental: Recorders typically do not withstand rugged environmental conditions and work best when enclosed. Specialized equipment and specialty enclosures are available to house these devices if the need justifies the expense.

Dataloggers

Description: Dataloggers are stand-alone devices that gather and store data for downloading to a computer during a scheduled site visit.

Cost: Capital costs are between $1,000 for a low-end model and $3,000 for a model with more than 256 megabytes random access memory (RAM) and eight input/output (I/O) points. Annual maintenance is about 2 hours at an estimated cost of $200.

How data are acquired: Dataloggers are configurable to a number of inputs, sample data rates, and sample lengths. Identify the number of inputs, how often they will be sampled, and for what period of time in order to calculate the required memory needed in the datalogger. Downloading the data must occur before the memory buffer is filled; otherwise, old data are overwritten by new data and the older data are lost.

Strengths: Dataloggers are useful in gathering and storing large amounts of data. Once the data are downloaded, process the data using a variety of spreadsheet or database programs. For example, the U.S. Department of the Interior, U.S. Geological Survey, standardized on Campbell Scientific CR10X dataloggers for its river-flow monitoring sites. California Department of Water Resources (DWR) uses Vaisala dataloggers for monitoring remote sites.

Weaknesses: Dataloggers offer no (or minimal) control capability.

Environmental: Dataloggers are designed for both inside and outside installations in an appropriate enclosure; they are typically able to withstand temperatures between -40 °F and 140 °F.

Remote-Terminal Units

Description: Remote-terminal units (RTU) are data acquisition and control devices that collect and process data (based on a user-defined program) and can transfer the real-time data to a central location using a communication medium.

Cost: The estimated installed cost for an RTU with a power supply, processor, eight discrete inputs, eight discrete outputs, four analog inputs, and four analog outputs is $5,000. Annual maintenance is estimated at $800 for two site trips.

How data are acquired: RTUs are configurable to a number of inputs and outputs (I/Os) depending on the number of I/O modules. Data are gathered and transferred to a data concentrator at a central location where they can be logged and stored.

Strengths: RTUs are used when a site needs real-time monitoring from a central location in conjunction with data processing and control at the remote site. One of the RTU's greatest strengths is flexibility in programming; the operator can create any conceivable control and monitoring program using one of several languages, such as ladder logic. RTUs support many communication protocols, thus allowing the data to be collected easily at a central location.

Weaknesses: The RTU has limited capability to store historical data.

Environmental: RTUs are designed to be enclosed. Standard temperature ranges are 32 °F to 150 °F. RTUs function best at an elevation below 6,500 feet.

Enclosures
Install the selected onsite electronics in an appropriate enclosure. Assume that the enclosure will also house communication devices, dc power supplies, an uninterruptible power supply, relays, terminal strips, and wire way as needed.

For the sites shown on figures 2 and 3, we estimate that 48-inch by 36-inch by 18-inch enclosures will suffice.

If the remote sites have a building structure, onsite enclosures could be mounted indoors on supports or freestanding (e.g., National Electrical Manufacturers Association (NEMA) type 4). Otherwise, they need to be mounted outdoors (e.g., NEMA type 3 or 4) on a concrete pad.

The enclosure's estimated installed cost is $7,200. Annual maintenance is estimated at 2 hours for a cost of $200. The concrete pad is estimated at $2,000 for a 6-foot by 6-foot by 2-foot pad including excavation, forms, material, pouring, and finishing labor.

3. Electric-Power Sources
Automated monitoring and control systems require electric power. This section outlines options for site electric power, and the tradeoffs between approaches.

Electric-Power Options
Commercial power. Where available, commercial power is desirable. With commercial power, the utility provider is responsible for operating and maintaining overhead and underground electrical systems. One disadvantage is that in remote areas, outages may not be repaired quickly. Onsite backup power may be warranted for continuity of operations through outages for critical facilities. Table 4 shows budgetary costs for commercial power components. Costs are in 2005 dollars.

Table 4. Budgetary cost estimates for commercial power.

Local electrical service, distribution	$ 1,500
Overhead single-phase line extension, flat terrain, excluding cost of clearing, excluding cost of right-of-way	$ 8,000/ 1,000 lineal ft
Overhead single-phase line extension, sloping terrain (<30% slope) excluding cost of clearing, excluding cost of right-of-way	$12,000/ 1,000 lineal ft
Clearing, 20-foot-wide strip	$ 8,000/ 1,000 lineal ft
Obtaining right-of-way	Not Estimated
Monthly electric service charges	$50 to $100

Backup power to commercial power. Due to the likelihood (in remote regions) that commercial power can be lost for 1 to 2 weeks, an onsite backup system is recommended for critical systems. For sites with critical mechanical equipment, a standby engine-generator should be available for backup power. For sites with instrumentation only (very low current draw) where there is no backup generator, a battery and charger backup system is fine. Costs vary based on loads. For the battery and charger system, typical installations range from $500 to $1,000.

Solar photovoltaic. For sites with light electrical loads, solar photovoltaic (PV) is often a feasible option. Many factors affect the configuration and cost of a system, including:

- Electrical load to be served.
- Sun availability.
- Other environmental factors (difficulty to access, snow load, etc.).

With the increasing popularity of solar PV, availability of components and system reliability has increased in the past decade. However, systems are not maintenance-free, particularly in rugged environments, and require periodic checking by qualified personnel.

For cost estimating—for the example problem in appendix B—use this configuration:

- 250-VA load (24 hours per day).
- 6 sun hours daily.
- Depending on location, the number of cloudy or rainy days varies. On these days, the PV system will not come on line. For example, a site located in northern California, characterized by an open area with no trees or other obstructions, will have an average of 285 days with sun. This figure is the base for the estimate in areas where fewer sun days will require a larger system.
- Allow for 500 feet underground wire in conduit from site to solar PV location.
- Mounting systems for the PV panels come in a variety of setups. For the applications discussed here, a pole-mounted system is adequate.
- Assume reasonably good access.

In 2005 dollars, we estimate the cost of the representative PV system at $4,000.

4. Communications

This section outlines the basic options for communicating from remote sites to a central station. And, as discussed in the introduction, you can use all of these communications means with any type of remote monitoring. As with electric power, the local conditions limit what is practical. A typical packaged wastewater plant site may require transferring up to 6,400 bits of data for each cycle of data gathering (e.g., per minute). Therefore, communication data rates of 9,600 bps are more than adequate to allow for regular updates from remote sites to the central location. This data rate is well within the capabilities of available communications options.

Where landline telephone, cell phone, or reasonable radio communications are not available, satellite is the only technically viable option, with the incumbent high monthly charges. Costs associated with communications easily can make remote monitoring infeasible.

Coordinate all communications options with the local forest communications staff for inclusion in the forest communications plan. This is particularly important for radio links that use repeaters for emergency radio traffic within the forest network. The communications staff will have the best information regarding the type of service that will best suit the needs of the monitoring system used and will coordinate telephone line installation, cell phone, and satellite links.

Communication Options

Cellular telephone. Cellular-telephone communications are full duplex in the 824-849 MHz band, and their reliability has improved in the past 5 years. This requires coordination with a cellular provider. This communication option is the least expensive alternative. Cellular data service options include:

- Circuit-Switched Data: This is the wireless equivalent of the telephone modem and requires the connection to be established and held for the duration of the data transmission. The installed hardware and antenna costs vary between $300 and $700. The service costs are based on connection time, with an average monthly cost of $60.

- Digital-Packet Data: Unlike the circuit-switched option, the digital-packet data option is always "on." This service depends on existing cellular coverage in the area. Fees are based on Kbytes of data transferred and include a one-time connection fee ($50) and the monthly cost for sending data ($55 per month). The hardware and antenna installed costs vary between $300 and $700.

Landline telephone. Where available, the use of digital dial-up lines is preferable because of their generally good reliability. High data-rate plans (DSO, ISDN, T1) are not available at all locations where a landline is available. Coordination with the local phone company is required, and setup and monthly costs depend on speeds. At the time of this study, rates for digital dial-up service ranges from $300 to over $1,200 a month, depending on type and speed of service.

Radio. Radio modems are an option when landline and/or cellular service are not available, the distance to the next communication site is within 5 to 10 miles, and line-of-sight is available from site-to-site. Radio modem options include:

- Fixed Frequency: Coordination with the Federal Communications Commission (FCC) is required as an FCC license is needed; your forest communications staff will coordinate with the FCC. Fixed frequency is more secure than spread spectrum. Data rates are in the 9.6 kbps range.

- Spread Spectrum: This does not require an FCC license. Two types of spread-spectrum radios are available: frequency hopping and direct sequence. Frequency hopping is used at remote sites with data rates in the 9.6 kbps range. Direct sequence has data rates in the range of 125 kbps to 11 Mbps.

A remote site's equipment would consist of a Yagi directional antenna, mounting pole, antenna cable, and a fixed-frequency or a spread-spectrum radio modem. The central location would require the same equipment as a remote site, excluding the directional antenna, as it would require an omni-directional antenna to allow communication with multiple sites. The installed costs vary between $3,000 and $7,000, including the hardware, cable, and labor to set up the optimal communication path between sites. These costs also include the construction of the antenna mast and pad. For fixed-frequency radio communication, add $150 to cover the FCC license fee. Also, note that raw costs for fixed-frequency radio modems are approximately $1,000 less than spread-spectrum radio modems.

Satellite. Satellite communications are an option for remote locations where other means of communication are not available or for a situation where remote sites are very far away from the central location. Supervisory control and data acquisition-type applications are:

- Low-Earth Orbit (LEO): LEO satellites orbit the Earth continuously. When one is leaving the sky, the information is passed to the one entering the sky. Transmission is continuous. Data transfer rates are in the 9.6 kbps range.
- Geosynchronous (GEO): A GEO satellite orbits with the Earth and is typically located in the southern sky, so line-of-sight with the southern sky is needed. Data transfer rates up to 2 Mbps are available.

The hardware needed includes a satellite modem, cables, antenna, and an antenna pole or mast at each remote site. Data can be relayed by satellite to the project's central location, or they can be sent to the service provider's satellite hub, where they can be retrieved using other means of communications such as landline telephone. The installed hardware costs are $4,000 to $8,000. Monthly service fees vary from $60 to $5,000 and are dependent on the data quantity or on the amount of time the modem is on.
Based on discussions with several satellite service providers, we estimate that a dedicated upload/download bandwidth of 32 Kbps will satisfy the needs for remote-site communications. The monthly fee for such a service is $370.

One-way satellite communication. If the tasks at a site only require one-way communications (alarms, datalogging, etc.), costs for satellite communication are available at a fraction of the cost for 2-way satellite communication. Communication is limited to one direction and would not be suitable for control. However, the systems can be configured to provide an e-mail message to a computer or a text message to a cell phone. This type of communication would be adequate for water treatment where there is a need for daily turbidity and chlorine residual monitoring and where control is not necessary. It would be excellent for alarms such as power off, intrusion, pump not running, battery levels, etc. Hardware costs (assuming existing computer and cell phone access is adequate) are approximately $500 per unit plus $30 set-up fee. If the transmitter needs an antenna (if it is located inside a metal building, for instance), add $100. Monthly fees are $2 to $3 and 15 cents per call or less than $10 per month, which includes a daily call for data.

5. Supervisory System (SCADA)
The supervisory system's main role is to collect data from remote sites using communications methods just discussed. Supervisory systems can be as simple as a personal computer connected to the monitoring system via a telephone line or more sophisticated than the system portrayed in figure 4. The system used in the example problem (see appendix B) would be a simple computer with software designed to poll the monitoring system at the site for data or receive alarms from the site using an automated dialer to dial the computer. Costs for a basic system will be less than $1,000 assuming a personal computer is available that can connect to an outside telephone line.

Figure 4 illustrates a block diagram of the supervisory system that provides a relatively economical approach with basic features. More sophisticated systems are available, but may not be justified due to the higher cost.

System Description
The proposed supervisory system uses up to five data concentrators (DC), one for each communication method used. The antennas can be mounted on a communication tower. The DC hardware includes the following components: power supplies, modems (radio, telephone, cellular, or satellite), RTUs, and Ethernet network cards or converters.

The proposed SCADA network protocol is Ethernet TCP/IP. The advantage of this protocol is that it allows a seamless interface with any existing business networks, and it leverages virtual private network (VPN) technology for connection with other SCADA servers potentially located hundreds of miles away from the server.

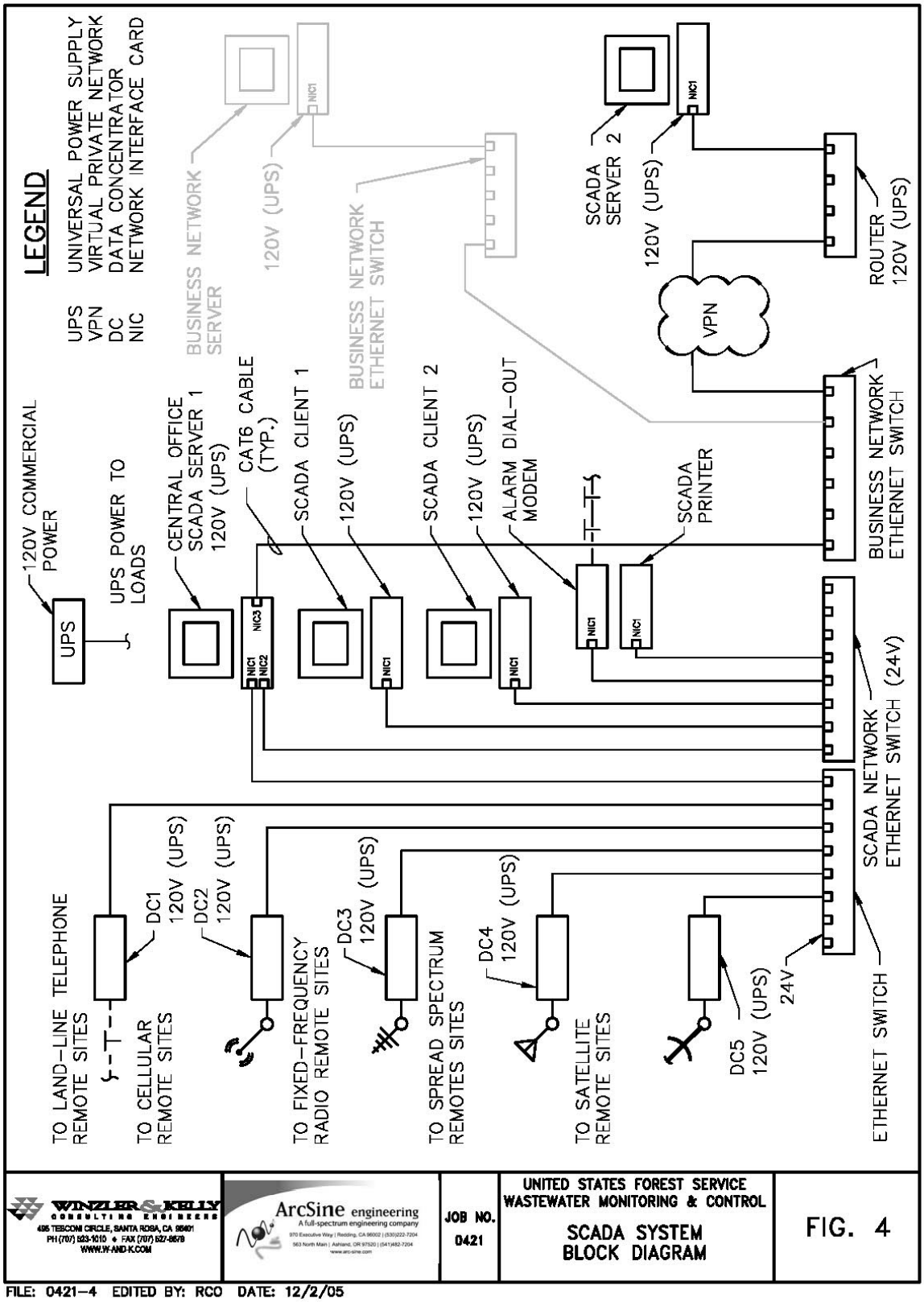

Figure 4. Supervisory control and data acquisition (SCADA) system block diagram.

Due to the organizational structure, the data will probably be collected at the forest level and reported to a regional office or the Washington Office. The supervisory system described here would be suitable at a forest-supervisor office level that monitors multiple locations on a forest.

Cost. The installed cost for a supervisory system as shown in figure 4, assuming only one server location at a forest or regional office is:

- Hardware, $17,000
- Software, $15,000
- Programming, $37,000

The assumptions for the supervisory system are:

- Provide one SCADA server and one SCADA client.
- Provide integration with 6 remote sites for a maximum of 200 input/output (I/O) points.
- Assume a maximum of two different communications media.
- Communications fees are not included.

SUMMARY AND CONCLUSIONS

Because these systems require a significant investment and wastewater treatment sites most able to use remote monitoring require an operator, the main purpose for remote monitoring for wastewater treatment will be to save unscheduled field trips to remote sites for the foreseeable future. Remote monitoring will have the most benefit for alarm monitoring, such as liquid level and power outages, and possibly remote starting for pumps and the like for nuisance shutdowns like power outages.

Remote monitoring is beneficial for other sites, such as water-treatment sites, where the sole reason for visiting the site is for monitoring. Many water-treatment sites require daily monitoring for chlorine and turbidity; remote monitoring greatly reduces the number of required site visits.

Many functions other than water and wastewater treatment can benefit from remote monitoring. Any time there is a need to know the status of some function, alarms, or datalogging, take a few hours and analyze the situation. You will more than likely find that remote monitoring will pay for itself simply in not having to visit the site as often.

Regulatory Requirements
Regulatory requirements pertaining to Forest Service wastewater sites include:

- Environmental Protection Agency (EPA) requirements.
- State and local requirements.
- Forest Service Manual and Handbook requirements.

Generally, the EPA delegates wastewater regulatory authority to the States, which may in turn delegate authority to a local jurisdiction. Each jurisdiction adds its own regulations based on local conditions. State and local regulations generally govern requirements for a particular wastewater management facility and are, therefore, highly site dependent. These requirements typically are included in the permit or regulations that govern the individual site.

Since the Forest Service has a very wide variety of wastewater management systems in many different areas, covered by many jurisdictional agencies, it is not practical or useful to enumerate all potential requirements. Under project implementation, you must pair the needs of the actual facility with appropriate remote monitoring and control systems, based on local system needs.

1.1.1 Federal Underground Injection Control Regulations

We initiated this remote monitoring and control analysis through an interest in the EPAs Underground Injection Control (UIC) Program and the potential for more restrictive requirements for Class V injection wells that might require more sophisticated onsite treatment and remote monitoring.

As defined, most Forest Service waste disposal systems do not fall under the UIC program. We do not expect that existing systems will require widespread replacement or additional treatment to comply with Federal regulations, as they exist currently or in the foreseeable future. We completed this monitoring and control analysis project on the understanding that ground water discharges of treated sanitary waste will still be allowed in the future. Many Forest Service systems regulated under the UIC or other programs could benefit from remote monitoring and control technologies.

1.1.2 Background Information Search

To classify sites and their requirements, we gathered information on types of wastewater facilities, the parameters of interest, and Forest Service needs.

Resources included queries of the Forest Service Infrastructure Application (INFRA) database as well as a request for information sent nationally to Forest Service regional- and forest-level program managers and engineers. We conducted Internet research to complete the search.

This research created an overall picture of the potential system types with opportunities for improved monitoring and control.

1.1.2.1 Forest Service INFRA Database Search

We queried the INFRA database for wastewater management systems. The resulting report consisted of over 5,500 lines of data with fields for information, including the location, type, system size, and comments. Many fields were missing, and it appears that users entered data based on varying approaches. We sorted the database several ways, and the best data available from INFRA—at the time of this report—are shown in table 5.

Since septic tanks are used in many other systems as a means of treatment (i.e., leach field, mound, wastewater lagoon, etc.), we should not view them as a separate system even though they are shown that way in the table.

Table 5. INFRA research summary

Type of System as Stated in USDAFS INFRA Database	Number of Systems in USDAFS INFRA Database
Composting Toilet	63
Leach Field	994
Lift Station	111
Mound	57
Municipal	2
Others	498
Septic Tank	2,930
Treatment Plant	160
Vault	415
Wastewater Lagoon	120
Not Listed	31

The INFRA database offered very little treatment plant data. Flows ranged from under 10,000 gallons per day to nearly 150,000 gallons per day. There was no information to evaluate the monitoring and control opportunities at the different treatment plants.

1.1.2.2 Request for information

Since we could not extract the information from the INFRA database, we developed a questionnaire and sent it to regional- and forest-level program managers and engineers.

We received responses for the following facilities:

- Crown King, R-3, Prescott National Forest.
- Eagle Lake Recreation Area, R-5, Lassen National Forest.
- Eagle Lake District Office, R-5, Lassen National Forest.
- Orleans, R-5, Six Rivers National Forest.
- Blanchard Springs Recreation Area, R-8, Ozark National Forest.
- Cass Civilian Conservation Center, R-8, Ozark National Forest.
- Lake Wedington Recreation Area, R-8, Ozark National Forest.
- Steelhead, Nakwasina, Chickamin, and Misty floating barge camps, R-10, Tongass National Forest.

1.1.2.3 Internet research

We also researched the Internet for potential information on sites identified from the information request process. The Internet provided some general information about Forest Service operations and some facilities. Permitting requirements appear to differ significantly by governing jurisdiction. However, the monitored parameters are similar, such as flow, biochemical oxygen demand (BOD), total suspended solids (TSS), chlorine residual, and so forth. The need for monitoring exotic parameters (such as nutrients, metals, and other potential pollutants) is more likely site specific. To evaluate specific Forest Service needs further, we contacted a local forest operator.

1.1.2.4 Personal interview

To gain a better perspective on typical Forest Service wastewater treatment, we contacted a Forest Service engineer responsible for managing a forest-level wastewater and water treatment program. Most forests use a variety of treatment methods in their programs ranging from simple vaults to septic systems to sophisticated treatment plants. The interview yielded the following information:

1. In California, wastewater systems are operated under permit from the Regional Water Quality Control Board (a State agency). Many States operate in this manner where Federal authority has been delegated to the State, which then provides a permit and regulatory guidance. Be sure to check local regulations for permits and permit administration.

2. The forest has personnel at most sites with wastewater systems. There is still significant benefit for manpower saving from remote monitoring. When systems are monitored remotely, the operator is free to perform other duties, yet available quickly to resolve any problems discovered by the central monitoring. Operating in this manner also allows staff flexibility for time off, training, etc.

3. Another significant benefit of remote monitoring is for water treatment. For surface water sources, chlorine residual and turbidity monitoring are required daily. It is relatively simple to do this monitoring remotely. Without remote monitoring, someone must travel to each site at least daily.

4. Another problem is with remote pumping systems that periodically shut down because of power outages and require a manual restart. The manual restart means an unscheduled site trip only to restart a pump. Since the Forest Service operates many remote sites, this is likely a problem at many sites with water and wastewater pumping facilities.

1.1.3 Summary of data collected

Overall, the data gathered from the INFRA database, the responses to the survey, and the information gathered from the Internet provided an overview of system types and their characteristics. In table 5, we categorized sites to identify site-types suitable for remote monitoring and control.

Appendix B—Example Problem: Remote Monitoring Systems Analysis

While developing this report, we did not identify a candidate site that could address the range of potential monitoring and control opportunities. Therefore, we developed a hypothetical site to illustrate the decisionmaking process for a remote monitoring project. At the end of this section, we included a table that generalizes each step for the entire spectrum of sites. The example project assumes:

- Sewage pumping station, two pumps, automatic alternation.
- Local-level control.
- During the summer, visited every other week for usual inspection; monthly during the winter.
- Commercial power, transmitted overhead, with electric service 1,000 feet from site and Forest Service-owned poles and overhead distribution for the remainder. No onsite standby power.
- Telephone service 1,000 feet.
- Two-hour drive from nearest employee qualified to work on system.
- Prone to nuisance trips (4 times per year) due to commercial-power loss.
- Trips result in local overflows, failure of toilets. In winter, from trip to overflow 2 or 3 days, or in summer, as short as 1 hour.
- Beacon rotates on control panel to indicate HIGH HIGH level.
- One minor overflow or near overflow every other year. Assume one moderate overflow every 10 years.
- Minimal regulatory guidance or oversight. Default to EPA requirements.

Design process

The following nine steps (as discussed previously) are required for the design process:

1. Assess site operational requirements.
2. Determine opportunities for remote monitoring and control.
3. Estimate costs of monitoring and control.
4. Estimate costs of supervisory system.
5. Estimate savings resulting from monitoring and control.
6. Identify other benefits of monitoring and control.
7. Calculate benefit-cost ratio resulting from monitoring and control.
8. Iterate.
9. Make implementation decisions.

1. Assess site operational requirements

1. Minimal regulatory oversight and assistance.
2. Visited 17 times per year for routine checks. Each visit takes 6 hours, including travel.
3. Visited four times per year to reset nuisance shutdowns. Each visit takes 6 hours, including travel. Due to the unscheduled nature, with overtime each visit on average costs 10 hours.
4. Commercial electric power is available at a reasonable distance from the facility.
5. Commercial landline telephone is available at a reasonable distance from the facility.

2. Determine opportunities for remote monitoring and control

Describe the types of monitoring devices that are the most likely to be applicable to Forest Service sites. For the example site, we have identified the following candidates:

- HIGH HIGH Level Monitoring (switch).
- LOW LOW Level Monitoring (switch).
- Analog Level Monitoring.
- Pump ON Monitoring.
- Commercial Power Monitoring.
- Remote Reset/Restart.

The remaining devices discussed in this publication do not apply to this situation. Note that while the list of items in Monitoring Devices is reasonably comprehensive for the functions that apply to Forest Service sites, occasionally other site-specific functions would apply. For example, remote monitoring of a condition associated with a particular package treatment system, such as transmitting a specific alarm, which presently is displayed on the front of the package control panel. In making the assessment of opportunities for monitoring, Forest Service staff should look critically at alarm events, their likely causes, and required responses and determine if supervisory monitoring and/or control associated with these events would offer benefits.

Choose onsite electronics
As described in the Onsite Electronics section, devices are available that can store data onsite for later viewing or electronic retrieval, or that can electronically send data real time. Transmitting data to a central location requires a communications link, which will vary widely in cost depending on the site. This step will likely result in all options on the table with later narrowing as costs/benefits are evaluated.

The example project is a candidate for a remote terminal unit (RTU). The strictly onsite options (hardcopy recorders, dataloggers) may not provide any appreciable benefit, although it depends on the interests of the Forest Service staff who are evaluating the opportunity.

Determine the source of electric power
Refer to Electric Power Sources in the publication. Commercial power is desirable where nearby. However, in our experience for smaller sites where commercial power is 2,000 feet or more away, the economics discriminate heavily against it.

To choose a commercial power source, research what is available at/near the site; this will involve discussions with the electric utility. This is a good time to raise questions about reliability and outage history in the area. If remote monitoring is being considered for an existing pump station, it is likely that commercial power is already onsite.

However, if commercial power appears to be infeasible, consider solar photovoltaic. Refer to Electric Power Sources.

Choose communications
If Step 2.2 resulted in considering an RTU (with continuous data transfer), you require a communications system. Refer to "Communications." Consult Forest Service communications staff at this step; they may be able to offer use of existing radios, including repeaters, and they should have knowledge of local options. Their understanding of the technologies and tradeoffs will also be helpful.

As described in "Communications," a wide range of options and costs is available. In general, radio and the lower bandwidth telephone options offer the lowest ongoing costs.

3. Estimate costs of monitoring and control

Estimate costs of monitoring devices
Using the figures in "Monitoring Devices," estimate costs of monitoring devices, which we summarize as follows for the example project:

Potential Monitoring System Costs for Example Project

Candidate	Initial Cost ($)	Annual O&M Cost ($)
HIGH HIGH Level Monitoring	200	50
LOW LOW Level Monitoring	200	50
Analog Level Monitoring	1,200	200
Pump ON Monitoring	100	50
Commercial Power Monitoring	100	50
Remote Reset/Restart	200	50
TOTALS	$2,000	$450

Annual O&M costs include parts, labor, and other typical costs. Add unusual costs associated with long travel time, harsh duty, and other conditions to these costs.

Estimate costs of onsite electronics
Using the figures in "Onsite Electronics," estimate costs of onsite electronics. Due to the dependency on communications in deciding basic architecture, you should estimate for both a recorder option and AN RTU option and carry the costs to the end. For the example site, assume the following:

Potential Onsite Electronics Costs for Example Project

Candidate	Initial Cost ($)	Annual O&M Cost ($)
Remote Terminal Unit	$5,000	$200

Estimate costs of electric power
The primary electric power source will be photovoltaic or commercial power. For the example project, commercial power is already available.

Estimate costs of communications
Telephone cables are often routed on commercial power poles, and the telephone company will do so at minimal to no initial cost to the customer. For estimating purposes, to route 1,000 feet of cable on Forest Service poles would cost $2 per foot, for a cost of $2,000. Allow $60 per month for fees, for a total of $720 per year.

4. Estimate costs for supervisory system
For the example project, assume there is no existing supervisory system and a very basic system is necessary to monitor the site. A personal computer is available; software and a modem are needed to monitor the site. Actual cost will be cost will be less than $1,000.

5. Estimate savings resulting from monitoring and control

This step consists of putting a dollar value on the savings from implementing monitoring and control. Reductions in labor and/or travel are the principal savings. In addition, when making the estimates, consider other potentially avoided costs, including lesser use of outside services, avoided fines, and other costs.

For estimating the example project, assume the employee costs $45 per hour including benefits.

Routine trips

Seventeen trips times (6 hours times $45) plus (200 miles times $0.35) = $5,780 per year

Emergency trips

Four trips times (10 hours times $45) plus (200 miles times $0.35) = $2,080 per year

With remote monitoring, you can reduce the routine trips to one per month in the summer and none in the winter (six per year). You can reduce the emergency trips to one per year.

Savings = $5,300 per year.

Overflows

The "cost" of overflows, even in an unregulated environment, can be substantial. For this example project analysis, assume a value of $1,000 on minor overflows (assume once every 2 years) and $5,000 on moderate overflows (assume once every 10 years) using the existing unmonitored system.

6. Calculate benefit-cost ratio resulting from monitoring and control

The benefit-cost ratio is the dollar value of the benefits divided by the dollar value of the costs over the analysis period. Any project with a benefit-cost ratio greater than 1.0 is cost effective.

For the benefit-cost ratio, we summarize the estimated economic costs and benefits (savings) below:

Estimated Costs of Example System

Item	Initial ($)	Annual Ongoing ($)
Monitoring Devices	2,000	450
Onsite Electronics	5,000	200
Electric Power	--	--
Communications	2,000	720
Supervisory System	1,000	
TOTALS	**$9,000**	**$1,370**

Estimated Savings of Example System

Item	Annual Ongoing Savings ($)
Routine visits	3,740
Emergency visits	1,560
Minor overflows ($1,000 each/2-year recurrence)	500
Moderate overflows ($5,000 each/10-year recurrence)	500
TOTAL	**$6,300**

To complete the benefit-cost analysis, use the following comparison:

- Potential annual savings from the monitoring project.

compared to

- The initial capital cost plus the annual operations and maintenance cost of a monitoring project.

This comparison used an equivalent annual cost comparison, where one-time capital costs were amortized over the useful life and then added to the ongoing annual costs (or savings). This example project analysis used an interest rate of 6 percent per year and a 10-year life, with a resulting capital recovery factor of 0.1359 to amortize the capital cost. The capital recovery factor is the number that the initial cost is multiplied by to result in the equivalent annual cost over the anticipated life given the interest rate. The useful life and interest rate used in this example project are the typical values that would be used for this type of analysis. Textbooks on economics can provide additional information for selecting other useful lives, interest rates, or formulas if so desired.

Summary Calculations for Equivalent Annual Cost and Savings

Condition	Up Front Capital Cost (1)	Equivalent Annual Capital Cost (2)	Annual Savings or Cost (1)	Total Equivalent Annual Savings or Cost
Savings from monitoring and control improvements	$0	$0	$6,300	$6,300
Cost of monitoring and control improvements	$9,000	$1,223	$1,370	$2,593

(1) See previous two tables for these values.
(2) Equivalent annual capital cost equals the capital cost times the capital recovery factor
$1,223 = $9,000 x 0.1359

Based on this analysis, the annual savings are more than the equivalent annual cost of the improvements and, therefore, the improvements appear to be cost effective. This net present savings could be applied towards this site's prorata share of the supervisory monitoring system.

In this case, the benefit-cost ratio (annual savings divided by the equivalent annual cost of the project) is 2.4 and, therefore, is cost effective.

7. Identify other benefits (intangibles) of monitoring and control
This step identifies other benefits to monitoring and control, which perhaps do not lend themselves to a dollar value, but which would result from a project. Candidates include the following:

- Scheduling maintenance versus emergency maintenance.
- Making generally better use of forest staff.
- Prioritizing work, particularly in times of short staff and/or multiple problems.
- Other benefits.

Emergency callouts are disruptive and entail a "cost" greater than the calculated cost. Other benefits could include increased knowledge gained from system monitoring, more efficient application of resources, better tracking of equipment run time and hence better maintenance planning. These and other benefits that may result from a remote monitoring and control project have value that is difficult

or impossible to quantify, yet can provide reasons to implement projects that may have benefit-cost ratios less than 1.0.

8. Iterate
Review the choices in each category and reconsider your approach to each solution in the site design process. The goal is to develop arrangement(s) that are likely to pass the test of benefit-cost decisionmaking in step 6.

9. Implement
Construct the system as designed.

Winzler and Kelly Consulting Engineers, Eureka, CA, and ArcSine Engineering, Redding, CA, provided the background information search, technical content, and draft report.

William Crane, PE, civil engineer, project leader, and technical editor, Forest Service, San Dimas Technology and Development Center.

Personal interview:
Curtis Cross, civil engineer, Six Rivers National Forest

Technical review:
Belinda Walker, assistant environmental engineer, Forest Service, Pacific Southwest Region (R-5)
Brenda Land, sanitary engineer, SDTDC
Ed Gililland, civil engineer, SDTDC
Ted Etter, electronics engineer, MTDC

SDTDC's national publications are available on the Internet at:

http://www.fs.fed.us/eng/pubs/

Forest Service and U.S. Department of the Interior Bureau of Land Management employees also can view videos, CDs, and SDTDC's individual project pages on their internal computer network at:

http://fsweb.sdtdc.wo.fs.fed.us/

For additional information on remote monitoring and control, contact San Dimas Technology and Development Center by phone at 909-599-1267.