Recreation Management Tech Tips

United States Department of Agriculture
Forest Service
National Technology & Development Program

May 2009

2300 0823 1307—SDTDC

Vault Toilet Interception Analysis

Brenda Land, Sanitary Engineer

INTRODUCTION

Most national forests have concrete vault toilets in their developed recreation sites. These toilets have a lined concrete vault, which can store 500 to 1,500 gallons of waste. When the vault is full, it is pumped out by a septic tank service truck. Sometimes the concrete vaults fill with rainwater or snowmelt runoff. This results in unneccesary annual pumping expenses.

Staff from the National Technology and Development Center, of the Forest Service, U.S. Department of Agriculture, was asked to look at ways to prevent the CXT single-vault toilet from flooding. There are several reasons that toilet vaults flood. Some are specific to the CXT toilet and some can affect any concrete vault toilet. This publication discusses vault-toilet flooding.

CAUSES

The CXT single-vault toilet has its roof dripline directly over the manhole lid (figure 1). Because the floor slab is set to drain out the front door of the toilet building, water running off the roof flows to the building wall and back under the manhole lid (figure 2). While the manhole lid has a gasket to seal it from intrusion, over time debris can get under the gasket, causing it not to seal properly (figure 3).

Figure 1—The roof dripline is directly over the manhole in the single vault CXT toilet building.

For additional information, contact: Recreation Management Program Leader, San Dimas Technology & Development Center, 444 East Bonita Avenue, San Dimas, CA 91773-3198; Phone 909-599-1267; TDD; 909-599-2357; FAX: 909-592-2309
Lotus Notes: Mailroom WO SDTDC@FSNOTES • Intranet (web site): http://fsweb.sdtdc.wo.fs.fed.us • Internet e-mail: mailroom_wo_sdtdc@fs.fed.us

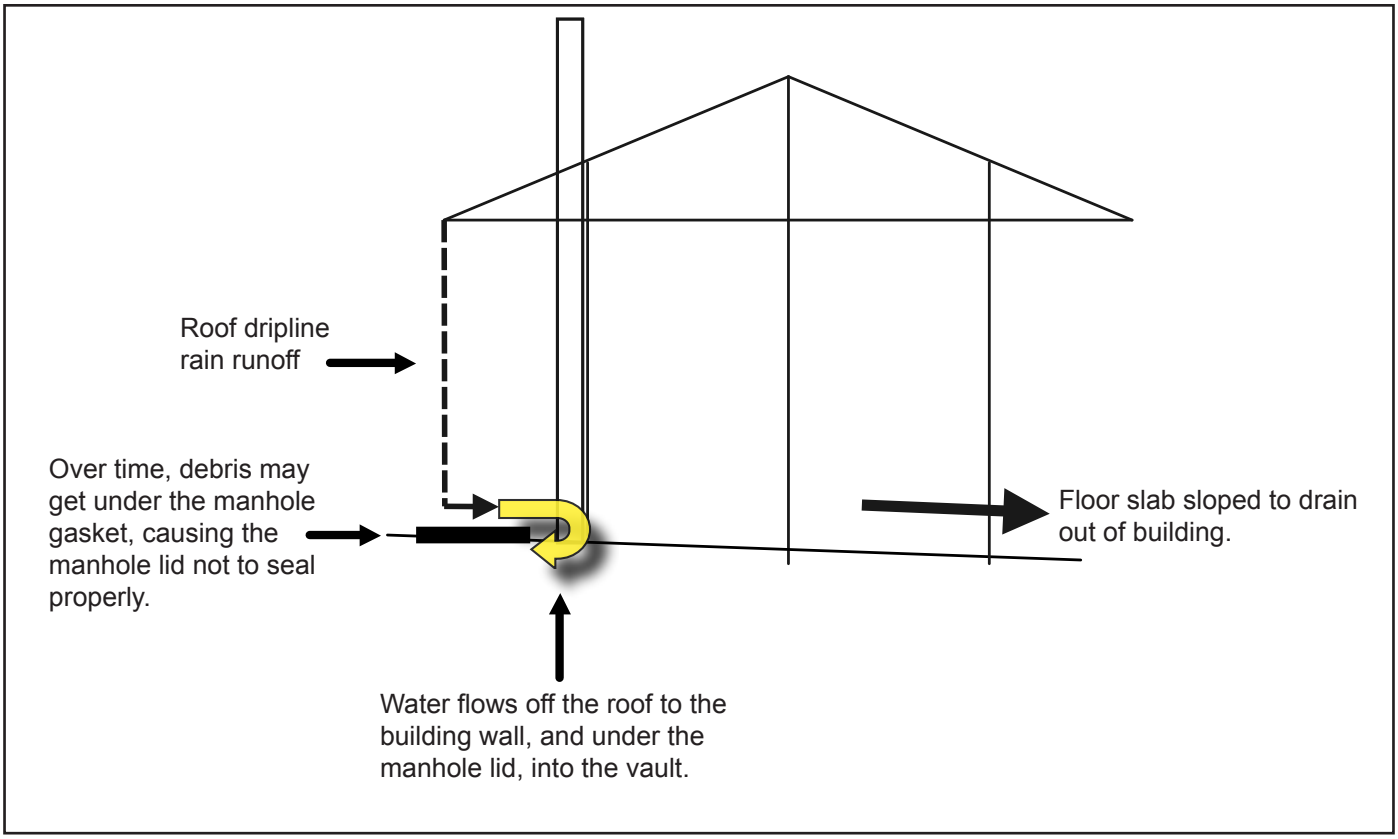

Figure 2—Roof dripline directly over manhole.

Figure 3—Debris under gasket.

In the CXT two-vault, and other concrete vault toilets, the roof dripline is not over the manhole cover. However, debris can still get under the gasket causing the manhole cover not to seal properly. If the building was installed in a low area, it can still get rainwater intrusion (figure 4).

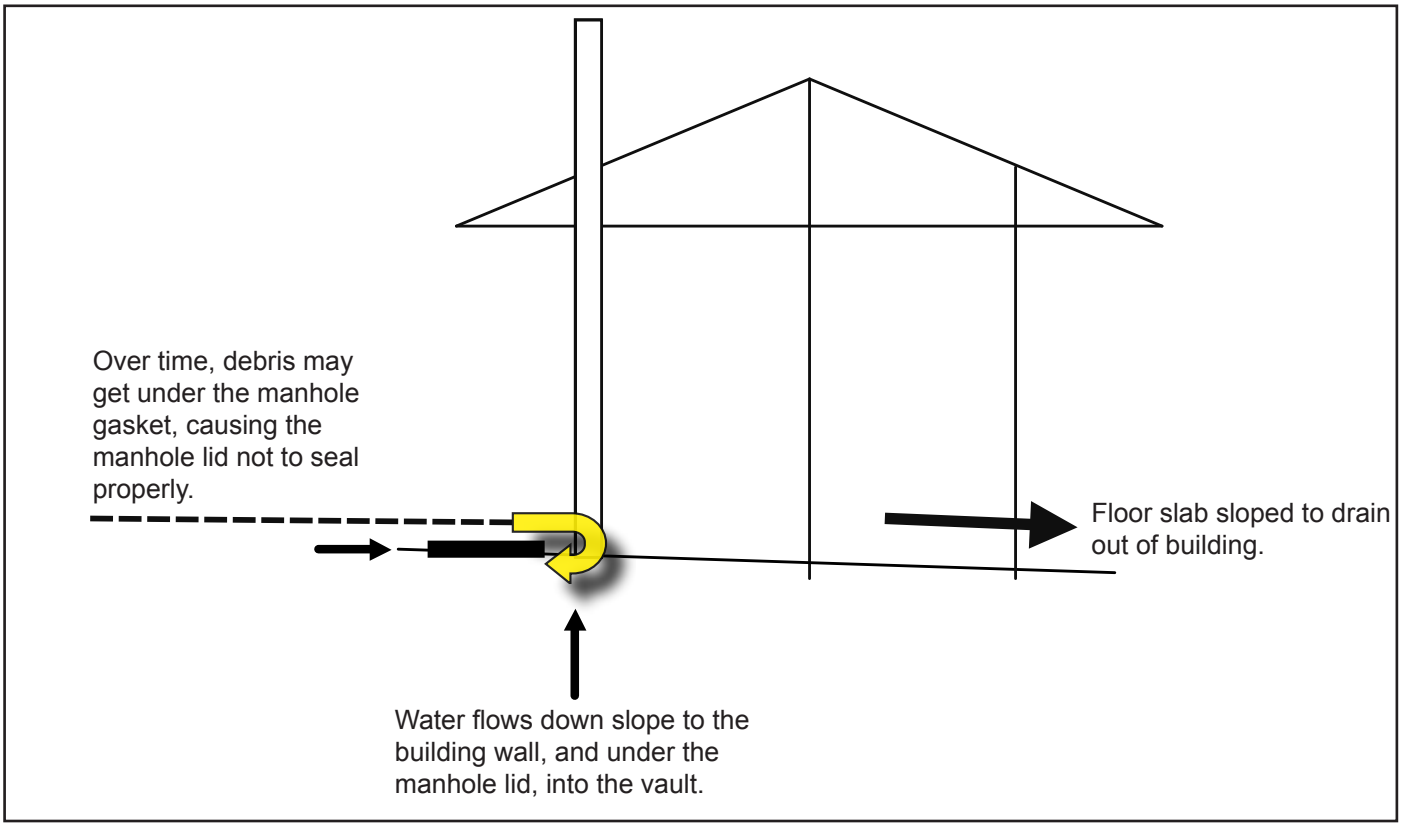

Figure 4—Building in low area.

Another potential location for water intrusion is at the joint between the vault and building slab. During installation, mastic or butyl tape is applied to the top of the vault before the building slab is set. This mastic makes a watertight seal (figure 5). Intrusion occurs if the mastic seal between the slab and the vault is damaged, and the vault is set too low (figure 6). Heavy rain, or rapid snowmelt, will get into the vault by going between the slab and the vault (figure 7).

Figure 5—Mastic between the vault and building slab make a watertight seal

Figure 6—This vault is below finished grade. The mastic between the building slab and vault is damaged. The vault fills with water every spring.

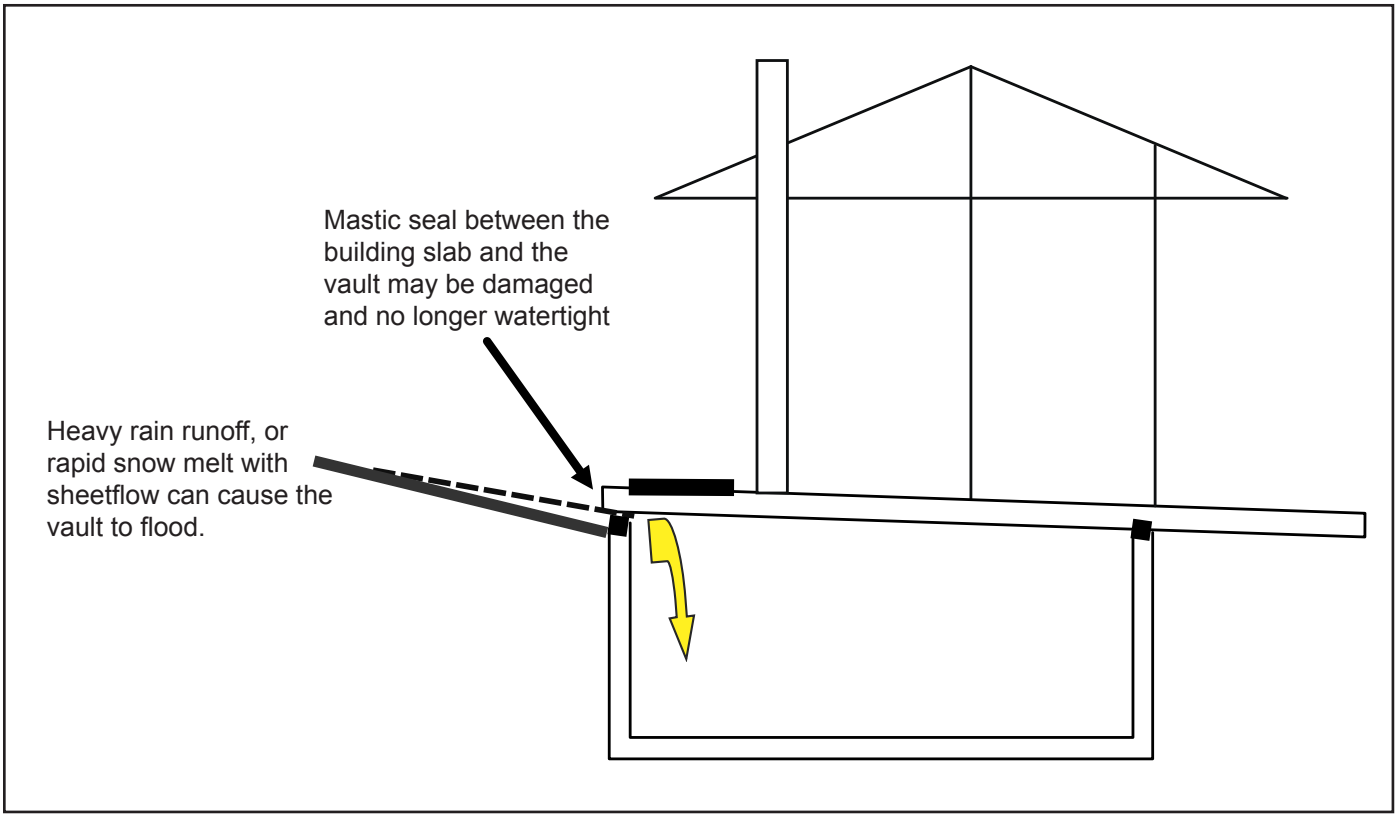

Figure 7—Heavy rain runoff or rapid snow melt can cause the vault to flood.

Rain going down the vent pipe does not add much water to the vault. One hundred twenty inches of rain adds less than 60 gallons of water to the vault.

SOME FIXES

To prevent water from entering the vault through the manhole, retrofit the manhole lid with a raised "shoebox" lid (figures 8 and 9). To fabricate a shoebox lid, weld a piece of angle iron to the frame, weld bar stock to the lid, and attach a new hinge. This overlapping configuration stops runoff from entering the vault through the manhole. Fabrication drawings are included in appendix.

For buildings that are set too low, construct a swale or ditch to intercept and divert water away from the building (figure 11). This is the least expensive method. An engineer can design a retaining wall to divert water if the backslope is steep. Use asphalt paving around the building to move the water away from the front of the vault. An engineer or geotechnician can design a French drain to move water away from the vault and percolate it into the ground rapidly (figure 10). Ensure that the pedestrian pathway remains accessible. Install a culvert if necessary to maintain access.

Figure 8—Retrofit "shoebox" lid stops water from entering the vault by going under the lid.

Figure 9—Another style of "shoebox" lid.

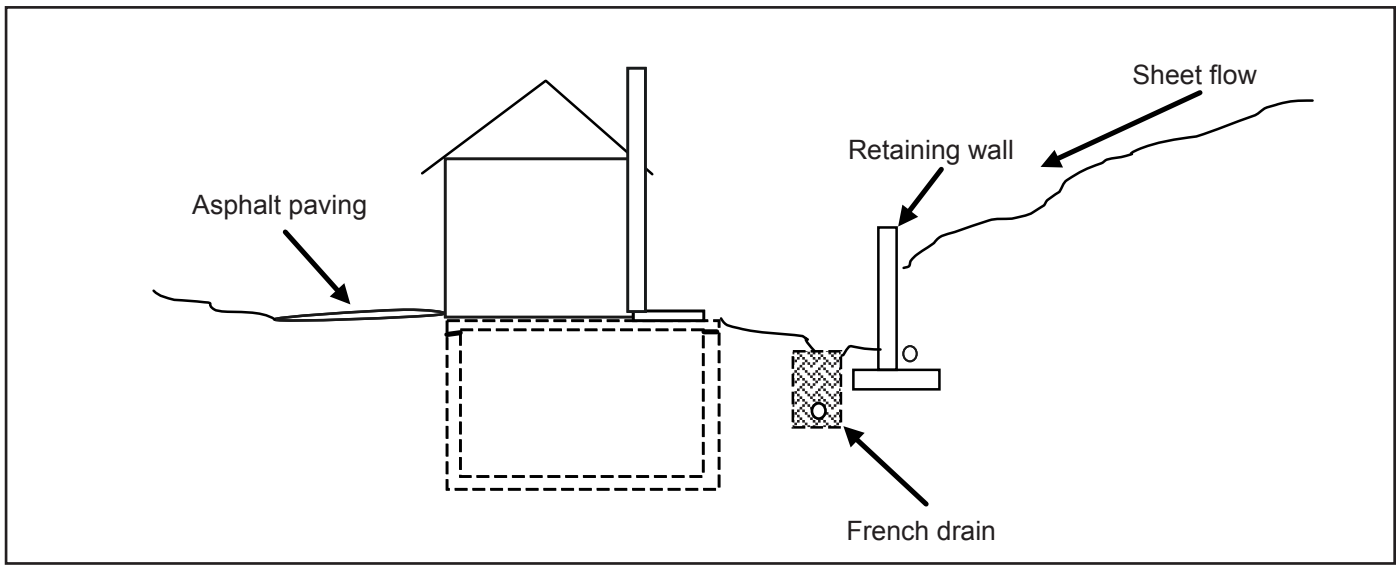

Figure 10—Alternatives to move water away from the building and vault.

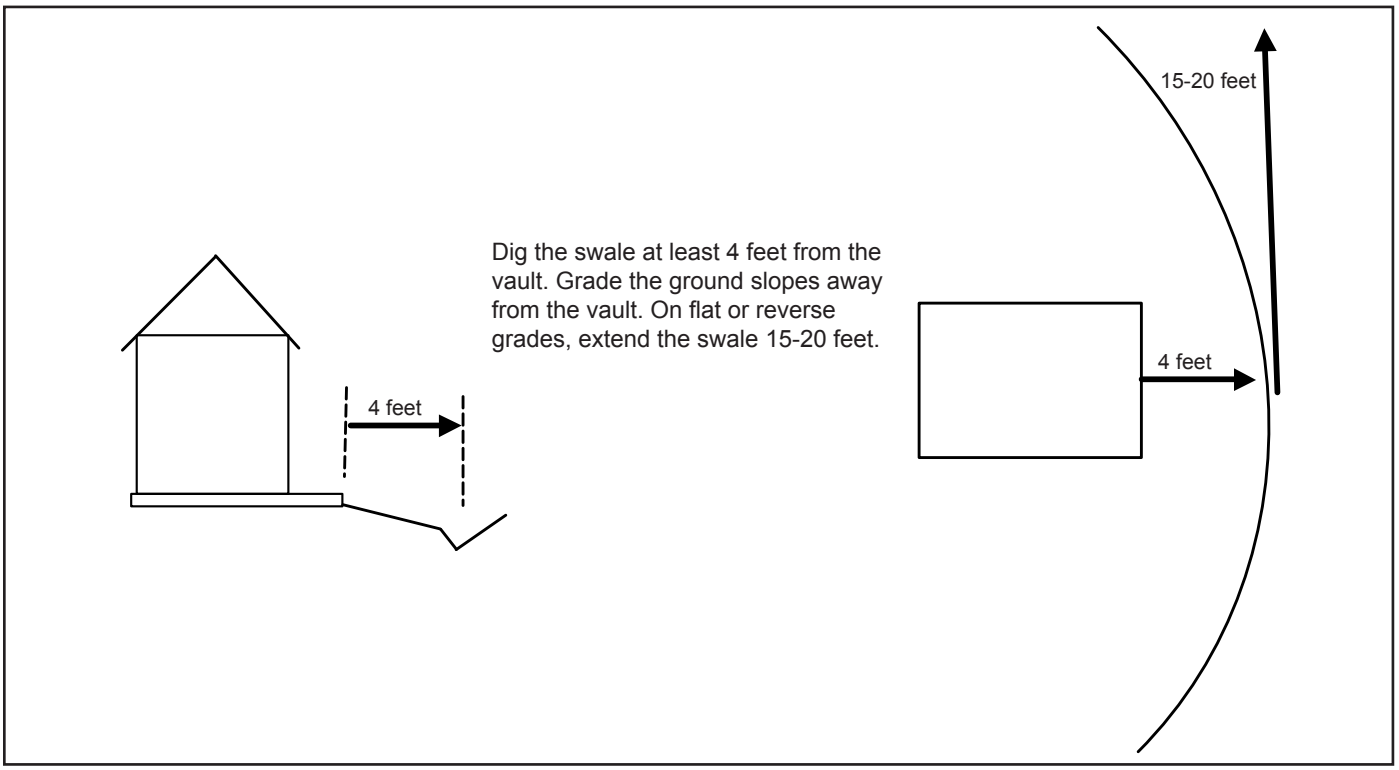

Figure 11—How to construct a swale.

Resetting a building and replacing an older liner is possible, but very expensive. The vault would need to be excavated, and a crane brought in to lift the building and vault. The old liner could then be removed and the vault resealed. Place a layer of aggregate in the excavation to raise the vault's grade 6 inches above the surrounding grade and reset the vault and building.

SUMMARY

The method (or methods) chosen to stop the vault from flooding depends on what is causing the flooding—whether it is due to the building being installed in a low area or it is in the path of sheetflow runoff. A swale or retaining wall can be used to intercept and divert sheetflow runoff. A French drain or asphalt paving may be used to get rainwater away from the vault. A shoebox lid will prevent flooding the vault through the manhole.

For new vault toilet purchases, request a raised manhole with a shoebox lid in locations that get a substantial amount of rain or snow, especially on the single-vault CXT. The mastic can become compromised over time due to age and weathering, so do not rely on it to keep floodwater out of the vault. Always set the top of the vault at least 6 inches higher than surrounding grade, per manufacturers' recommendation.

Staff from the National Technology and Development Center would like to thank the following individuals for their review of this publication: Missoula Technology and Development Center architect Kathie Snodgrass; Inyo National Forest, Pacific Southwest Region, employee Rick Laborde; Mt. Baker-Snoqualmie National Forest, Pacific Northwest Region, forestry technician Pete Selvig (retired); and San Dimas Technology and Development Center landscape architect Ellen Eubanks.

The National Technology and Development Center's publications are available on the Internet at http://www.fs.fed.us/eng/pubs/

Forest Service and U.S. Department of the Interior, Bureau of Land Management employees also can view the National Technology and Development Center's videos, CDs, and individual project pages on their internal computer network at http://fsweb.sdtdc.wo.fs.fed.us/

For additional information on concrete vault toilets, contact Brenda Land at SDTDC. Phone: 909–599–1267 ext 219. E-mail: bland@fs.fed.us

APPENDIX-FABRICATION DRAWINGS

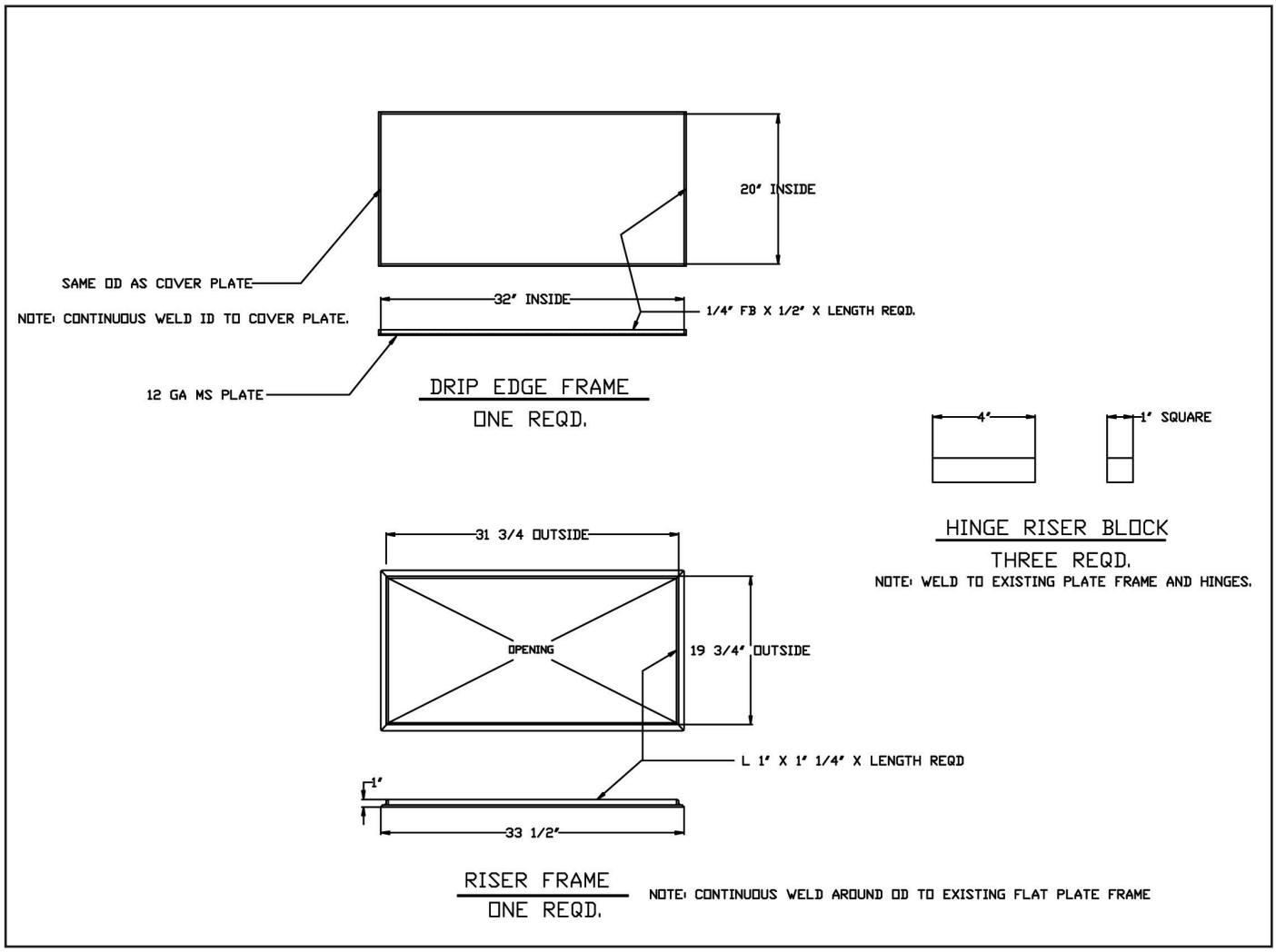

The information contained in this publication has been developed for the guidance of employees of the Forest Service, U.S. Department of Agriculture, its contractors, and cooperating Federal and State agencies. The Forest Service assumes no responsibility for the interpretation or use of this information by other than its own employees. The use of trade, firm, or corporation names is for the information and convenience of the reader. Such use does not constitute an official evaluation, conclusion, recommendation, endorsement, or approval of any product or service to the exclusion of others that may be suitable.

The U.S. Department of Agriculture (USDA) prohibits discrimination in all its programs and activities on the basis of race, color, national origin, age, disability, and where applicable, sex, marital status, familial status, parental status, religion, sexual orientation, genetic information, political beliefs, reprisal, or because all or part of an individual's income is derived from any public assistance program. (Not all prohibited bases apply to all programs.) Persons with disabilities who require alternative means for communication of program information (Braille, large print, audiotape, etc.) should contact USDA's TARGET Center at (202) 720-2600 (voice and TDD). To file a complaint of discrimination, write USDA, Director, Office of Civil Rights, 1400 Independence Avenue, S.W., Washington, D.C. 20250-9410, or call (800) 795-3272 (voice) or (202) 720-6382 (TDD). USDA is an equal opportunity provider and employer.