US Department of
Agriculture

Forest Service

**National Technology &
Development Program**

2300—Recreation Mgmt
0623 1802—SDTDC
June 2006

Water System Operator's Guide

Water System Operator's Guide

Brenda Land—Sanitary Engineer

San Dimas Technology and Develoment Center
San Dimas, CA 91773-3198

Information contained in this document has been developed for the guidance of employees of the U.S. Department of Agriculture (USDA) Forest Service, its contractors, and cooperating Federal and State agencies. The USDA Forest Service assumes no responsibility for the interpretation or use of this information by other than its own employees. The use of trade, firm, or corporation names is for the information and convenience of the reader. Such use does not constitute an official evaluation, conclusion, recommendation, endorsement, or approval of any product or service to the exclusion of others that may be suitable.

The U.S. Department of Agriculture (USDA) prohibits discrimination in all its programs and activities on the basis of race, color, national origin, age, disability, and where applicable, sex, marital status, familial status, parental status, religion, sexual orientation, genetic information, political beliefs, reprisal, or because all or part of an individual's income is derived from any public assistance program. (Not all prohibited bases apply to all programs.) Persons with disabilities who require alternative means for communication of program information (Braille, large print, audiotape, etc.) should contact USDA's TARGET Center at (202) 720-2600 (voice and TDD). To file a complaint of discrimination, write USDA, Director, Office of Civil Rights, 1400 Independence Avenue, S.W., Washington, D.C. 20250-9410, or call (800) 795-3272 (voice) or (202) 720-6382 (TDD). USDA is an equal opportunity provider and employer.

TABLE OF CONTENTS

Introduction 1

Wells 1

Springs 9

Distribution System 13

System Startup 19

Seasonal Shutdown 23

Water System Disinfection 25

Filtration 33

Sampling and Testing 37

Reporting, Public Notification, and Recordkeeping 47

Math Review 49

Water Operator Reference Material 53

Definitions 55

Acknowledgements 57

Appendixes

- Appendix A—Public Notification 59
- Appendix B—Sampling Plans 62
- Appendix C—Vulnerability Assessment 85
- Appendix D—Bibliography 91

INTRODUCTION

This document provides information and checklists to help operators of small U.S. Department of Agriculture (USDA) Forest Service drinking water systems keep their drinking water safe and wholesome. Water system operators are the first line of defense against waterborne health risks. People expect water from faucets and hydrants to be safe to drink and it is up to the water system operator to ensure that it is.

This publication is not intended to replace operator certification training. It is a supplement that addresses some of the elements unique to small, transient, seasonal ground water systems. Surface water systems are not discussed because the U.S. Environmental Protection Agency (EPA) is currently reviewing the rules governing surface water and ground water under the direct influence of surface water systems.

WELLS

The vast majority of USDA Forest Service water systems are ground water. Drilled or driven wells are the most common method of accessing and extracting ground water for potable water use (figure 1). Most well water is clean and safe to drink right out of the ground and only requires treatment to keep it safe through the distribution system.

A well log report is prepared when a new well is drilled. The log contains valuable information and a copy should be kept in the permanent water system folder. The well log report includes:

- Physical location of the well.
- Casing size, type, and depth.
- Screen type, grout, and sealing methods.
- Well lithology (a description of each geologic stratum encountered, where water was encountered, and depth of the well).
- Static water level, draw down, and well yield.

Figure 1—Drill rig.

Components

A well vent allows air to enter the well as the water is removed. It allows air to exit the well when the pump turns off and the water level returns to the static level. Figure 2 shows typical well components.

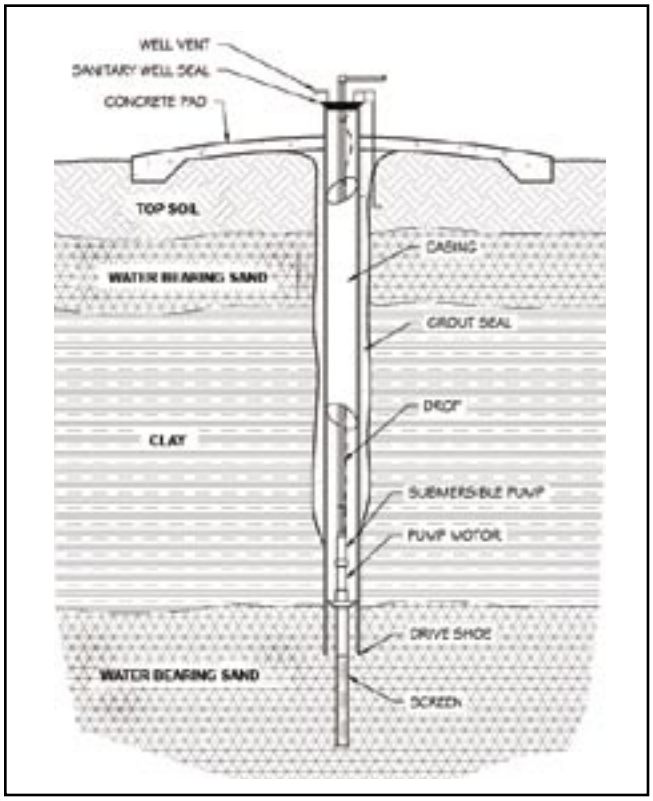

Figure 2—Typical well.

A sanitary seal is used at the top of the well casing to prevent contaminated water or other material from entering the well.

A concrete pad prevents water from channeling along the casing into the ground water. The casing is installed during drilling to prevent the bore hole's collapse. Grout seal fills the space around the casing to prevent contamination from entering the well. The screen allows water to enter the well while keeping sand out.

A pitless adapter (figure 3) allows the well casing and electrical conduit to terminate above ground while the plumbing remains below the frostline. Some States do not allow pitless adapters and require that well casings terminate above ground in a pumphouse.

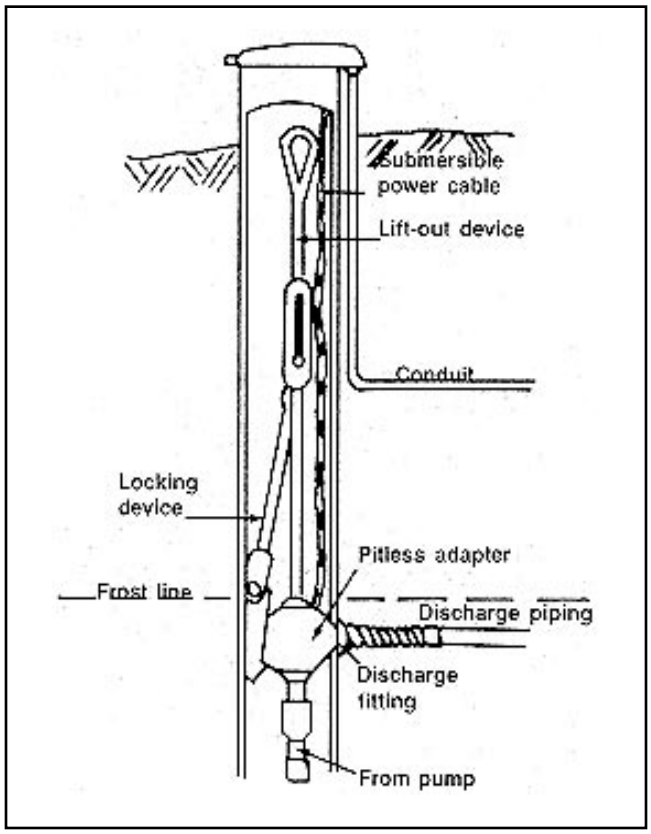

Figure 3—Pitless adapter.

Typical Components of a Small Ground Water Treatment System

Figure 4 shows common components of a small chlorinated water system.

The watermeter measures both system capacity in gallons per hour and the total water produced in gallons (figure 5). It helps the system operator determine if water demand has increased or well capacity has decreased if the system is not meeting the need.

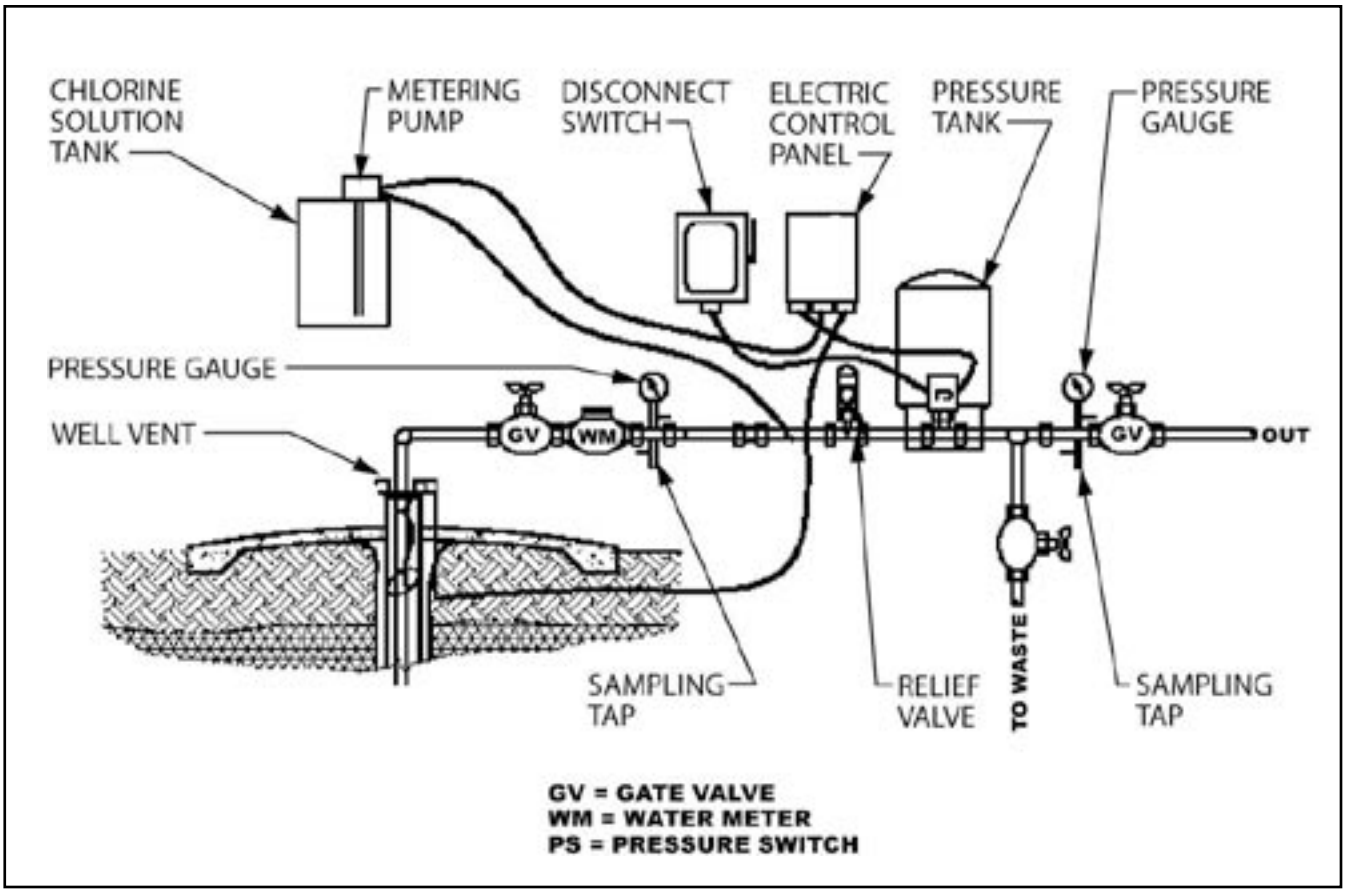

Figure 4—Typical small chlorinated water system.

Figure 5—Watermeter.

The electric control panel (figure 6) connects the well pump, chlorine metering pump, and pressure switch so when the pump is running, the metering pump is running. This ensures that only treated water enters the system.

Figure 6—Electrical control panel.

A sample tap (figure 7) is required close to the well to access untreated well water. This tap is used to monitor chemical contaminants and to check well-water quality. It should be tested for chlorine residual on a chlorinated system periodically to ensure that the check valve is functioning (no chlorine should be detected unless the well has been shock chlorinated).

Figure 7—Sample tap.

Chlorine is diluted to the desired concentration in the chlorine solution tank. The metering pump injects chlorine solution into the water when the well pump turns on. Figure 8 shows a metering pump that is below the solution level so it does not lose prime.

Figure 8—Chlorine solution tank and metering pump.

Well Pumps

Many different pumps can be used to move water and pressurize the distribution system. Pumps may be manually operated such as a handpump or solar/grid-electric powered. Various pumps are shown in figures 9 through 12.

Figure 9—Submersible well pump.

Figure 10—Handpump.

Figure 11—Booster pump.

Figure 12—Solar-powered jack pump.

Routine Well Maintenance

- ❒ Check the well-vent screen. Ensure that it is clean and intact (figure 13). If the screen is torn, insects may enter the well. If the screen is plugged, it may damage the pump and well too.

Figure 13—Well vent.

- ❒ Check the sanitary seal and connections for tightness.
- ❒ Ensure that the electrical conduit is intact. (Figure 14 shows broken electrical conduit. This should be repaired immediately, since it provides an excellent point of entry for insects, dirt, and rodents.)

Figure 14—Compromised well seal.

- ❒ Ensure that water drains away from the well casing or well slab (figure 15).

Figure 15—Well pitless adapter without slab, graded to drain.

- ❒ Check the well slab for cracks (figure 16).

Figure 16—Well pitless adapter with intact slab.

- ❒ Ensure that animals are not burrowing under the well slab.

Operation and Maintenance

The 1999 EPA publication, *Troubleshooting Guide For Small Ground Water Systems with Hypochlorination* (figure 17), lists problems, possible causes, and possible solutions to many small ground water system problems, including wells, pumps, pressure tanks, and chlorinators. The operation and maintenance information on wells, pumps, and pressure tanks is good reference material even for system operators that do not chlorinate.

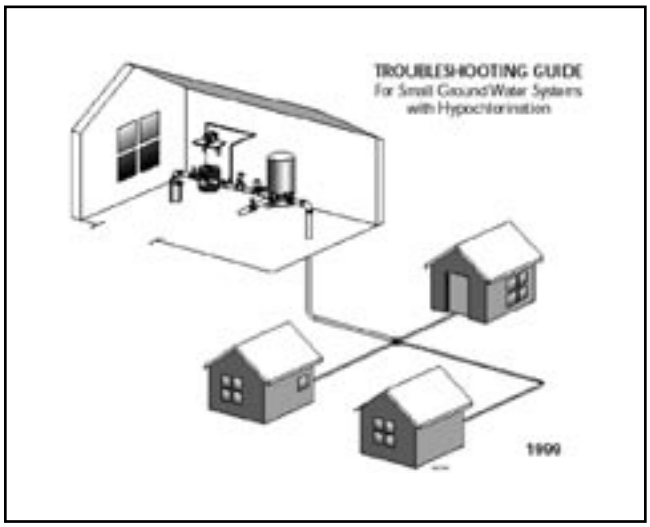

Figure 17—Handy reference material.

If the water supply stops keeping up with demand, it may be caused by an increase in water demand, a well capacity (the amount of water produced) problem, or a pump problem. The water meter can be used to identify an increase in demand. An increase in campground use or a leak in the distribution system are also indications that demand has increased.

If a decrease in well capacity is suspected, check (or have an engineer check) static water level, draw-down, and yield to ensure that the well capacity has not changed (the well log should have original capacity information).

Well capacity can change over time. Some causes are:

- Plugged or encrusted well screen.
- Decreased water level in aquifer caused by drought or excess pumping.
- Collapsed or plugged gravel pack around well.

If a well has a decreased capacity, contact an experienced well driller to diagnose and correct the problem (if possible).

Well pumps wear out over time and need to be replaced. A decrease in water pressure, a decrease in water flow, or both are signs that a pump may be wearing out.

When replacing a well pump, size the pump based on current well capacity and water system demand. A pump that is too large may pump sand and cause the aquifer to collapse and a pump that is too small will not meet water system demand.

Use table 1 to record your system's equipment.

Table 1—Water system components.

Water System Components

Water Pump

Manufacturer _____

Horsepower _____

Capacity in gpm _____

Date and nature of last service _____

_____

_____

_____

Chemical Feed Pump

Manufacturer _____

Horsepower _____

Capacity in gpm _____

Date and nature of last service _____

_____

_____

_____

Water Tank

Type (gravity or pressure) _____

Size _____

Other _____

_____

_____

SPRINGS

Springs occur when water surfaces naturally, such as a seep. An engineer must be involved in developing a spring source as a drinking water system. Properly constructed and maintained springs protect the spring source from surface water contamination. Figures 18 and 19 show one method of containing and protecting a spring water source.

Spring Components

The following terms are useful when discussing springs.

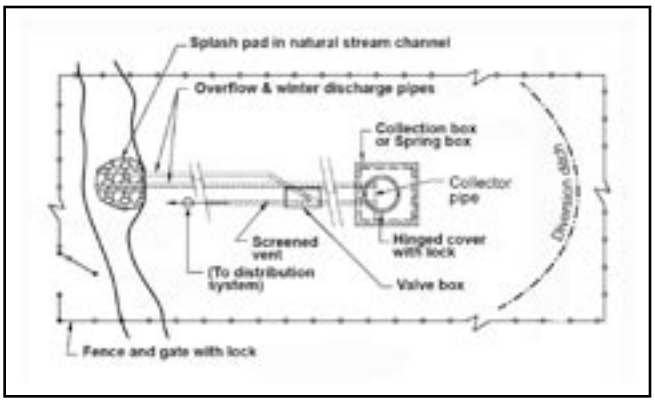

Figure 18—Typical spring, plan view (not to scale).

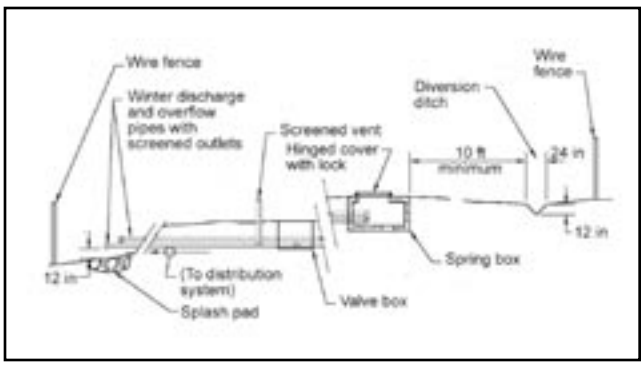

Figure 19—Typical spring, profile view (not to scale).

Collection box (also called a spring box)—A box made of concrete, fiberglass, galvanized steel, or other material approved to be in contact with potable water that collects spring water. It may be sealed and buried, or it may extend abovegrade and have access for inspection and disinfection.

Collector pipe—A perforated or slotted pipe that collects spring water.

Collection system—A system of gravel, collector pipe, and a trench or spring box and/or cut-off wall used to contain the spring.

Cut-off ditch—An excavated trench extending below the water-bearing formation and into an impervious layer. It is used in place of a spring box.

Cut-off wall—A well-tamped impervious wing-shaped wall of clay, concrete, or other material that ensures the spring flow enters the collection system.

Diversion ditch—A ditch above the spring box that diverts the surface flow around the spring development.

Overflow—Plumbing that prevents excess spring water from undercutting the spring box.

Spring box—See collection box.

Vent—A screened opening that prevents a vacuum in the spring box.

Operation and Maintenance

- Remove all dead vegetation within 25 feet of the spring (figure 20).

Figure 20—Clear brush and grade to drain.

- Remove woody brush and shrubs to prevent roots from intruding into the collection area.
- Grade the spring collection area to prevent standing surface water.
- Check that the fencing is intact and the gate is locked (figures 21 and 22).

Figure 21—Spring collection area should be fenced and locked.

Figure 22—Repair damaged fencing.

- Check that the spring box lid is locked (figure 23). The lid should be a shoe-box design with a 3-inch overhang.

Figure 23—Spring box lid must be locked.

- Check that the spring overflow is armored. Place a large rock in the overflow splash zone if it is missing (figure 24).

Figure 24—This overflow splash zone is armored. The screen must be repaired.

- Check the overflow screen to ensure that it is intact. Replace damaged screen (figure 25). The screen mesh size may be specified by the State.

Figure 25—Replacing screen.

- Check that the vent is screened and in good repair (figure 26).

Figure 26—This vent must be repaired.

- Clean the diversion ditch of any winter debris (figure 27). Check that the ditch is in good repair and directs surface water around the spring collection area.

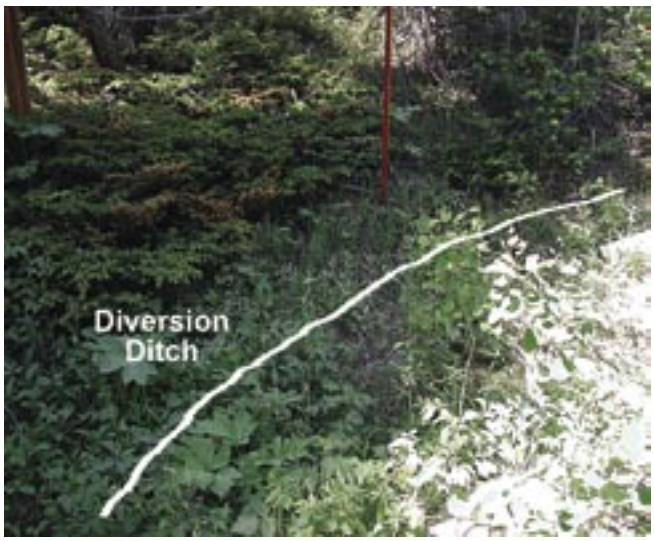

Figure 27—Diversion ditch.

Water Collection and Storage System

- Check for and repair any obvious damage to the water collection and storage system (figure 28). Clean debris out of the spring box and repair the seals (figure 29).

Figure 28—Check for damage to the spring's water collection and storage system.

Figure 29—Clean debris from the spring box and repair the lid seal.

DISTRIBUTION SYSTEM

Components

The distribution system includes all parts of the water system past treatment. Typical components of the distribution system are storage tanks, pipes, valves, and hydrants.

Tanks

Small water systems have many storage tank choices depending on volume needed, site access, visual impacts, system pressure, and so forth. Storage tanks are shown in figures 30 through 34. Water tanks may provide storage for treated water, chlorine contact time, and/or water pressure for the distribution system.

Figure 30—Welded steel water tank.

Figure 31—Pressure tanks.

Figure 32—Polyethylene tank.

Figure 33—Concrete water tank.

Figure 34—Wooden water storage tank.

Water storage tanks must keep the treated water clean. With the exception of pressure tanks, they should have a lid or cover that keeps birds, rodents, insects, dust, and surface runoff out. They also must have a screened vent to allow air to enter the tank as the water level drops, and leave the tank as water level rises. Outside tank access covers must be lockable and weathertight (figure 35).

Figure 35—Tank lids must be locked. Replace two opposing bolts with padlocks for security.

Water tanks are confined spaces and a confined space warning label should be placed on the tank access (figure 36 and 37). Confined space procedures must be followed by anyone entering the tank.

Figure 36—Access to a buried water tank. The outer hatch doors are hinged with a lock. A confined space warning is clearly posted.

Figure 37—This buried tank access needs a confined space warning and a lock for security.

Pipes

Pipes used in water systems must be approved for potable water use (figure 38).

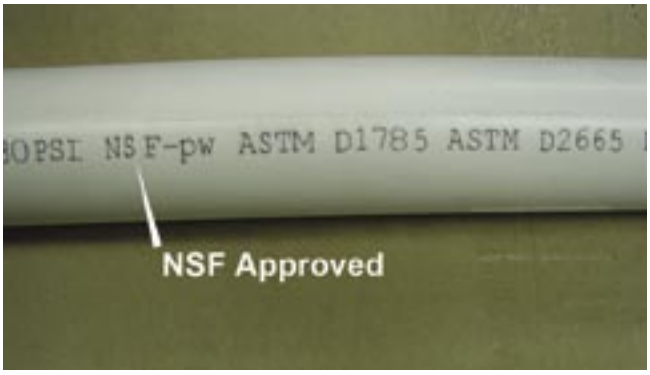

Figure 38—Polyvinyl chloride pipe approved for potable water use.

NSF International (NSF), American National Standards Institute (ANSI), American Society for Testing and Materials (ASTM), and Underwriters Laboratories (UL) test and approve pipe for potable water applications. Polyvinyl chloride, polyethylene, or ductile iron pipe are commonly used in distribution systems.

Distribution system pipes are typically buried below the frostline to keep them from freezing and to protect them from vandalism (figure 39). Valve boxes provide access to distribution system valves (figure 40).

Figure 39—Distribution system pipe placed in a trench.

Figure 40—Valve box.

Valves

Valves are used throughout the distribution system. Valves are used to isolate equipment, buildings, and other areas of the water system for repair as well as to control the direction and rate of flow. They are used to drain the system for seasonal shutdown.

There may be many types of valves in a water system (figure 41). Check valves are used to control the direction of waterflow. Gate valves and ball valves stop waterflow. Include the valve types in the operation and maintenance manual.

Figure 41—Valves.

Mark valves on the site plan. Inspect and exercise (fully open and close) all valves at least annually to ensure that they are functional, and to flush any trapped sediment from the valve body. Inspect the valves for leaks (figure 42). Do this during startup and shutdown on seasonal systems. Valves suffer more from lack of use than from frequent use.

Figure 42—Leaking valve.

On seasonal water systems, inspect valves and check valve operation during spring startup and fall shutdown.

Replace or repair any valves that leak, fail to perform as intended, or are stuck (will not open or shut).

After a pipe breaks is not a good time to discover that a valve does not work.

Things to check:

- ❒ Ensure that the valve boxes are not full of mud or debris, or have become buried.
- ❒ Inspect the valve for leaks around the valve stem.
- ❒ Ensure that the valve handle is intact.
- ❒ Ensure that the valve can be fully opened and fully closed.
- ❒ Record the inspection date, whether the valve is right or left handed, and whether it is normally open or normally closed.
- ❒ Record any needed repairs or replacements.

Hydrants

Hose bibs, sample taps, faucets, and fire plugs are all hydrants. Note their locations on the site plan. Equip threaded hose bibs with vacuum breakers to prevent potential cross-contamination (figure 43). Use freezeproof hydrants on systems used during the winter (figure 44).

Figure 43—Hose bib with vacuum breaker.

Figure 44—Freezeproof hydrant.

Annually, inspect all hydrants for leaks. While sanitizing the system for seasonal startup, look for leaking hydrants and sticking self-closing faucets.

Provide a splash pad, or apron and paddle-type handle for accessible hydrants (figure 45).

Figure 45—Accessible faucet.

Provide drainage control to prevent site erosion. A concrete pad and drain (figure 46) or armored splash zone (figure 47) can be used.

Figure 46—Faucet with concrete pad and drain.

Figure 47—This armored splash zone allows drainage and prevents site erosion.

SYSTEM START UP

Many recreational water systems are seasonal. They are opened for use in the spring, and closed during the fall. Check seasonal water systems for winter damage prior to going back in service. Visually check for any obvious damage (figures 48 and 49).

Figure 48—Spring box with erosion damage.

Figure 49—Erosion around vent.

Perform annual maintenance on all pumps and components as recommended in the operation and maintenance manuals.

Clean water storage tanks and check for damage to floats, valves, screens, and wires (figure 50). Repair any winter damage. **Water tanks are confined spaces** (figure 51). Do not enter a tank or confined space unless you have received proper training and have the proper equipment. Use procedures specified in the Confined Space Job Hazard Analysis if you must enter the tank. Use a qualified contractor to perform confined space work if you do not have the training.

Figure 50—Open tanks and check for damage.

Figure 51—Tanks are confined spaces.

Disinfect the water storage tank and distribution system before opening it for use. To disinfect a water storage tank or spring box and distribution system:

- Close all winter drain valves and reinstall any hydrants that were removed for the winter.
- Shock-chlorinate tanks or spring boxes with 50 milligrams per liter (mg/L) chlorine, unless your State has other requirements (figure 52). Table 2 shows 5.25 percent chlorine needed attain 50 mg/L for various sized tanks. See chapter 11 on how to calculate other chlorine quantities.
- Turn on well pump, or close spring overflow, so pipes and storage tank begin filling with water.
- Add chlorine as needed to keep 50 mg/L chlorine in the tank or spring box.
- When the smaller storage tanks are full of chlorinated water, check chlorine residual, and add enough chlorine to have a residual of 50 mg/L for 24 hours.

Figure 52—Shock-chlorinate seasonal systems. (Non-NSF bleach can be used for shocking the system as long as it is not scented and the water is not for human consumption.)

To disinfect the distribution system:

- Working down the distribution system from the tank, open each hydrant until water flows and there is a strong chlorine smell. Then close the hydrant (figure 53).
- Open all faucets in the buildings until there is a strong chlorine smell. Close the faucets. Repeat for the winter drain valves.

Table 2—Amount of 5.25 percent chlorine needed for tank sizes.

	5.25% chlorine, 50 mg/L		5.25% chlorine, 2 mg/L	
Tank Size, Gal	US	SI	US	SI
500 gallons	½ gallon	1.8 L	2½ ounces	70 ml
750 gallons	¾ gallon	2.8 L	3¾ ounces	105 ml
1,000 gallons	1 gallon	3.8 L	5 ounces	145 ml
2,500 gallons	2½ gallons	9.5 L	1½ cups	360 ml
5,000 gallons	4¾ gallons	18 L	3 cups	720 ml
10,000 gallons	9½ gallons	36 L	6 cups	1.4 L
15,000 gallons	14¼ gallons	48 L	0.6 gallons	2.2 L
20,000 gallons	19 gallons	72 L	1⅛ gallons	3.0 L

Figure 53—Open each hydrant until chlorine is detected.

Figure 54—Test water for free chlorine.

- Inspect all hydrants, faucets, and valves for leaks while chlorinating the system.
- Test the water at the farthest point in the line until a 50 mg/L residual is achieved (figure 54). Not all test kits will read 50 mg/L. Use bottled water to dilute the sample if necessary to read the residual with your test kit.
- Let the water sit in the distribution system for 24 hours.
- Test the residual at the end of 24 hours. If it is below 25 mg/L, repeat the process.
- Drain the tank and distribution system and flush with clean water until chlorine residual is less than 1 mg/L. Do not let the chlorinated water enter a live stream or lake.

**Care must be taken when flushing the chlorine from the lines and tank. Chlorine at this level will interfere with septic tank function, and can injure or kill fish. The water may be discharged onto the ground, or dechlorinated with vitamin C before discharge to septic tanks or near water bodies. A permit may be needed to discharge into a stream.

- Take a preseason special bacteriological test before placing the water system in service. If the test results come back negative, open the system for public use. A special water sample does not count toward monthly testing requirements. *A routine sample must be taken for every month or partial month the system is open.*
- Inform your State primacy agency that a public water system is open.

If the water storage tank is very large (figure 55), or the available flow rate is very small:

Figure 55—Large tank.

- To disinfect a large tank, spray the tank walls with a 200 mg/L chlorine solution.** Allow the tank to stand unused for 30 minutes.

**The operators doing the spraying should wear a self-contained breathing apparatus. Chlorine fumes from the spray are hazardous. Employees must be trained and certified before wearing a self-contained breathing apparatus.

- Add enough water to the tank to obtain a 50 mg/L residual (table 2). Disinfect the distribution system by opening each hydrant, faucet, and valve until a strong chlorine odor is detected, then close the tap.
- Allow the chlorinated water to stand in the distribution system for 24 hours.
- Fill the tank with clean water and maintain a 3 mg/L chlorine residual for 3 to 6 hours.
- Take a *special* bacteriological test before placing the water system in service. If the test results come back negative, open the system for public use. *A special water sample does not count toward monthly testing requirements. A routine sample must be taken for every month or partial month the system is open.*
- Inform your State primacy agency and the supervisor's office that a public water system is open. Inform the supervisor's office that a nonpublic water system is open. Enter this data into the water sampling module.

SEASONAL SHUTDOWN

Seasonally operated water systems must be shutdown carefully in the fall to minimize the potential for winter damage. You must inform the State and the supervisor's office when a public system is closed for the year. Failure to notify the State of the closure will result in violations for failure to take required routine samples. Inform the supervisor's office when nonpublic water systems are closed for the year.

Springs

- Open the winter bypass valve for the spring box and shut the valve to the distribution lines (figure 56).

Figure 56—Open winter bypass valve.

- Drain tanks and lines. Close drain valves to prevent ground water from backing up into the system through the drain valves (figure 57). An open hydrant at the top of the system aids draining by allowing air to replace the water leaving the lines.

Figure 57—Drain all water lines.

- Remove any hydrants or other components that may be subject to winter damage and store properly. Cap open line ends where components were removed (figure 58). Store components in a secure, dry location.

Figure 58—Cap lines when components are removed to keep pipes clean.

Wells

- Drain tanks and lines, and close drain valves to prevent ground water from backing up into the system through the drain valves. An open hydrant at the top of the system aids draining by allowing air to replace the water leaving the lines.
- Remove any hydrants or other components that may be subject to winter damage and store properly. Cap open line ends where components were removed. Store components in a secure, dry location.
- Empty the chlorine solution tank.

WATER SYSTEM DISINFECTION

Disinfection is the primary method for destroying or inactivating pathogenic organisms that spread disease in drinking water. A disinfectant, such as chlorine, frequently is added to water to ensure that it is free of harmful bacteria and viruses. Chlorine is the most common disinfectant for small water systems, and the only disinfectant this publication addresses.

People expect safe, wholesome water from hydrants (figure 59). Adding chlorine to the water helps ensure that the water stays safe throughout the distribution system to the point of use.

Figure 59—Safe, wholesome water is the goal of water treatment.

Public water supplies that add chlorine to the water must meet State requirements for dose, equipment, and monitoring. A chlorine dose too low may allow regrowth of disinfectant-resistant pathogens, excessive biofilm development in distribution systems, or an unpleasant taste in the water. A chlorine dose too high may cause taste and odor problems, distribution pipe degradation, unnecessary disinfection byproducts, and health problems.

All public water systems that use surface water, or ground water under the direct influence of surface water, are required to disinfect the water. Some States require that all public water systems maintain a chlorine residual in the distribution system. A chlorine residual entering the distribution system should be at least 0.2 mg/L. The chlorine residual should be detectable at the farthest tap in the distribution system. Some States require the residual to be at least 0.2 mg/L at the farthest tap. The chlorine dose may need to be increased at the tank to maintain a detectable residual at the farthest tap. The chlorine residual in drinking water should never exceed 4 mg/L. A chlorine test kit, such as the one shown in figure 60, is required to measure the chlorine residual in water systems.

Figure 60—Chlorine test kit.

Components

Common disinfection methods for small USDA Forest Service systems are:

- Erosion-feed tablet chlorinators for calcium hypochlorite.
- Metering pumps for hypochlorite solutions.
- Onsite hypochlorite generators.

Hypochlorite reacts with water to form chlorine. Calcium hypochlorite, also called high test hypochlorite, is a solid that contains 65 to 75 percent available chlorine. Sodium hypochlorite, also called bleach, is a liquid that contains 5 to 15 percent available chlorine. Onsite hypochlorite generators make about a 3 percent chlorine solution.

Erosion-Feed Chlorinators

Install erosion-feed chlorinators (figure 61) in areas with or without electric power. A sidestream of water is directed to the chlorinator, where it dissolves the calcium hypochlorite tablet. The solution returns to the main water line or well.

Figure 61—Erosion-feed chlorinator.

Metered Hypochlorination Systems

Metered hypochlorination systems consist of a solution tank and chemical metering pump. Sodium hypochlorite (liquid) or calcium hypochlorite (solid or powder) make the solution. Chemical pumps inject the chlorine solution into the water. A solution tank holds the diluted hypochlorite (figure 62).

Figure 62—Solution tank and chemical pump.

Chemical pumps may be either electric or water powered. Water-powered chemical injectors can work on gravity systems, such as springs, and in areas without electric power.

The injection point (figure 63) contains a check valve to prevent water from flowing back into the chemical tank and injects the chlorine solution into the middle of the water pipe for rapid mixing.

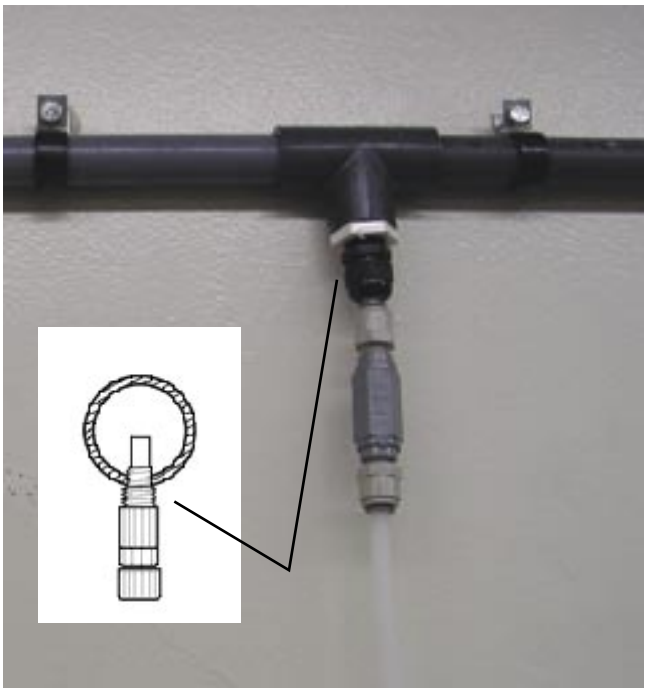

Figure 63—Chlorine injection point.

An electric chemical pump must be interconnected to the well pump as a safety factor, so when the well pump does not operate, the chemical pump will not operate, and if the chemical pump does not operate, the well pump will not operate (figure 64).

Figure 64—Electrical controls.

Onsite Chlorine Generators

Onsite chlorine generators (figure 65) make chlorine by converting a brine solution--sodium chloride and water—into sodium hydroxide and chlorine. Water softener salt is dissolved in a brine tank (figure 66). The saturated brine solution is mixed with fresh water through a two-headed metering pump (figure 67) to the required concentration. The chlorine solution may be stored in a solution tank and injected into the water with a chemical metering pump, or injected directly into the water.

Figure 65—Onsite chlorine generator.

Figure 66—Brine tank.

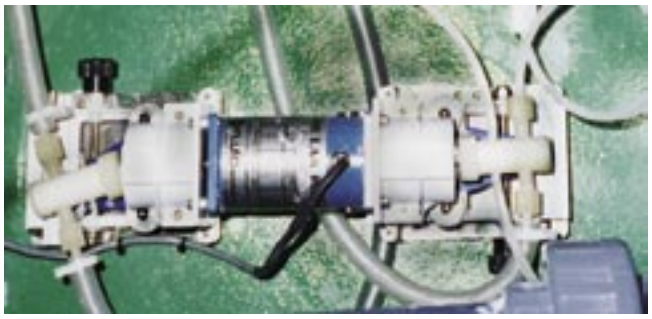

Figure 67—Metering pump.

Operation and Maintenance Erosion-Feed Hypochlorinators

Erosion-feed hypochlorinators are simple devices. A sidestream of water flows through the chlorinator and dissolves a calcium hypochlorite tablet or pellets. The chlorinated water is returned to the main water line or well.

Maintenance check list:

- ❒ Check the level of the chlorine tablets or pellets. Add more tablets as needed.
- ❒ Check for scale or calcium buildup in the chlorinator. Clean the chlorinator when scale or calcium sediment is visible.
- ❒ Check for the chlorine tablets or pellets bridging or binding. If the chlorinator contains hypochlorite tablets, but no chlorine residual is present in the water, the tablets or pellets may be binding in the chlorinator.

Adjust the chlorine dose by increasing the amount of water that flows through the chlorinator. Follow manufacturer's directions for adjusting the water flow and chlorine dose.

Calcium hypochlorite or high test hypochlorite is a strong oxidizer (figure 68). Wear personal protective equipment when handling this product. Follow guidelines published in the product's material safety data sheet. Care must be taken when transporting and storing calcium hypochlorite to keep it away from organic materials, petroleum products, fats, and oils. A very hot fire may start if oils come in contact with calcium hypochlorite. Store the tablets in a sealed container in a cool place to prevent moisture from contacting the tablets.

Figure 68—Calcium hypochlorite tablets.

Calcium hypochlorite is available as a fast-dissolving powder or pellets that can be dissolved in a solution tank and metered into the water. Calcium hypochlorite is available as 65 to 75 percent chlorine.

Hypochlorination Systems

Figure 69 shows a hypochlorination system. Sodium hypochlorite (figure 70) is diluted in the solution tank, and the metering pump injects the solution into the water system. Small chemical metering pumps are usually sealed and cannot be repaired. They must be replaced if not functioning correctly.

Figure 69—Hypochlorination system.

Figure 70—Sodium hypochlorite.

Maintenance checklist:

- ❒ Change the oil and lubricate the moving parts per the manufacturer's recommendation.
- ❒ Check for sediment and scale buildup in the solution tank and tubing. Remove accumulated sediment when changing chlorine solution. Wash the tank with vinegar and pump vinegar through the tubing to remove scale, as needed. Rinse the tank and tubing thoroughly before putting chlorine solution back in the tank.
- ❒ Recommend installing an inline indicator in the tube, so it is visually apparent that chlorine is being injected.
- ❒ Check for and fix any leaks.

Metering pumps are sized to deliver a chlorine dose based on well-pump capacity, chlorine demand, and solution strength.

Well-pump capacity is the rate that the well pump moves water while it is pumping. If a flowmeter is between the pump and a water storage tank, the pump capacity can be read directly from the flowmeter. If the flowmeter is after the tank (figure 71), calculate the pump capacity as follows:

> Open a valve until the pump starts, then turn off the valve. Time how long the pump runs. Then open a valve and read the flowmeter and time how long it takes for the pump to start again.
>
> For example:
> If the flowmeter reads 5 gallons per minute (gal/min), and it takes 30 minutes (min) to start the pump, and the pump runs for 15 min to refill the tank, then:
> Pump capacity =
> (5 gal/min x 30 min)/15 min = 10 gal/min

Figure 71—Flowmeter after pressure tank.

If there is no flowmeter, the pump capacity must be measured. To find the capacity of a pump with a pressure tank, open a valve until the pump starts. Immediately close the valve and time how long the pump runs. Then carefully fill a 1-gallon (gal) container and dump it, count the number of fill/dump repetitions until the pump starts.

For example:
If the pump run time is 3 min, and it takes 30 gal to start the pump (30 fill/dump repetitions), then:
Pump capacity = 30 gal/3 min = 10 gal/min

Demand refers to everything in the water that chlorine reacts with. Chlorine reacts with many impurities found naturally in water. Enough chlorine must be added to the system to meet the demand before a free chlorine residual is achieved. Free chlorine protects the water in the distribution system from bacterial contamination.

Iron, ammonia, organic material, and sulfur compounds consume free available chlorine. Use the results from the initial water test to approximate the water's chlorine demand. Iron consumes 1 milligram per liter (mg/L) chlorine for 1 mg/L iron. Sulfur consumes 3 mg/L chlorine for 1 mg/L sulfur.

For example:
If the well water has 2 mg/L iron, and 1 mg/L sulfur, and a 1 mg/L residual is desired, then:

(2 mg/L iron) x 1	= 2 mg/L Cl^2
(1 mg/L sulfur) x 3	= 3 mg/L Cl^2
Desired residual	= 1 mg/L Cl^2
Dose	= 6 mg/L Cl^2

The strength of solution in the chlorine solution tank also must be known.

If undiluted 5.25 percent sodium hypochlorite (bleach) is used, and the well pump capacity is 10 gal/min, and the estimated dose is 6 mg/L Cl^2, then:

[(10 gal/min) x (6 mg/L) x 1,440] / 52,500 =
1.6 gallons per day (gal/day), 6.23 liters per day (L/day), or 0.6 milliliter per minute (mL/min)

In this example, select a metering pump sized for 3 gal/day (or 1 mL/min). The initial setting would be 1.6/3 x 10 = 5.3 on a 10 position dial.

Size the meter pump to operate near its midpoint (the point where the pump operates most efficiently, while allowing room to adjust the dose).

Adjust the initial setting to keep the chlorine residual throughout the distribution system. During the period of lowest water use, test the chlorine residual at the farthest tap in the distribution system. If no chlorine is detected, increase the chlorine dose. Caution—assure that the tap closest to storage tank does not have too much chlorine if the chlorine dose is increased.

Sodium hypochlorite (liquid bleach) is available in 5.25 to 12.5 percent chlorine concentration. Sodium hypochlorite can lose up to 4 percent of its available chlorine content per month. Most manufacturers recommend a shelf life of 3 months.

Onsite Chlorine Generation

Onsite chlorine generators use a saltwater brine solution to make chlorine. Saltwater is pumped through an electrolytic cell to make chlorine gas, sodium hypochlorite, or hypochlorous acid depending on the brand of generator. Store the liquid hypochlorite solution in a solution tank and meter it into the water system. The chlorine gas or liquid hypochlorite may be injected directly into the water system. Directly injecting the chlorine into the water system requires a chlorine monitor to control the chlorine dose.

Maintenance checklist:

- Check the salt level in the brine tank. Add salt as needed.
- Check the flow through the cell. Clean the orifice if the flow is too low.
- Because the electrolytic cell is subject to scale buildup in hard water, acid wash or return to the manufacturer for cleaning periodically.
- Check the percent chlorine produced. Collect 1 mL chlorine from the cell. Dilute with 50 mL water. Test for chlorine concentration.

FILTRATION

Filtration is the process of removing contaminants from water. Different filters remove specific contaminants. Sand-separation filters (figure 72) remove coarse, heavy particles. Bag and cartridge filters remove coarse particles down to 1-micron sized (very fine) particles. They are available as large or small filters (figures 73 and 74).

Figure 72—Centrifugal type filters remove heavy particles, such as sand, by spinning the water to create a vortex.

Figure 73—Large bag and cartridge filter housings.

Figure 74—Small cartridge filter.

Bag filters are supported in a basket (figures 75 and 76) to prevent them from breaking. Remove and discard spent bag and cartridge filters (figure 77).

Figure 75—New bag and support basket.

Figure 76—Used bag filter in support basket.

Figure 77—Used bags are discarded.

Rapid sand filters can be manually or automatically backwashed (figure 78).

Figure 78—Manually backwashed rapid sand filter.

Install pressure gauges or a differential gauge before and after the filter (figure 79). Replace or backwash filters when the difference in water pressure entering the filter is much higher than the water leaving the filter. This is called differential pressure. Different filter brands are rated for different flows and differential pressure tolerances. Replace or backwash the filter before it ruptures or dumps particles back into the water. Refer to the operation and maintenance manual for information on flow, pressure, and replacements parts.

Figure 79—Pressure gauges installed before and after a bag filter.

SAMPLING AND TESTING

Potable (drinking) water must be tested to ensure that the water is safe to drink. The water source originally is tested for many contaminants to ensure that it is safe to drink. Small water systems that are disinfected must be tested for chlorine residual. All USDA Forest Service potable water systems must be tested for bacteria a minimum of once a month. All public water systems must be tested annually for nitrate and nitrite. Additional tests may be required for larger systems. Figure 80 shows water being tested for chlorine residual. Figure 81 shows a typical chlorine test kit.

Figure 80—Chlorine residual test.

Figure 81—Chlorine test kit.

Broken or leaking water lines, cross connections, or debris in storage tanks can cause unhealthy drinking water.

Figure 82 shows a valve leaking under water. A loss of water pressure can suck the muddy water into the distribution system.

Figure 82—Leaking valve under water.

Figure 83 shows a hydrant without an atmospheric vacuum breaker. A loss of water pressure can cause water in the hose to be sucked into the distribution system. Threaded hose bibs must be equipped with an atmospheric vacuum breaker as shown in figure 84.

Figure 83—Missing atmospheric vacuum breaker.

Figure 84—Atmospheric vacuum breaker.

The water source may become contaminated. Leaking vault toilets too close to a well may contaminate the ground water. Improperly abandoned wells may cause ground water contamination. Improperly sealed wells and springs can cause water contamination.

Figure 85 is a spring source contaminated with insects, rust, and leafy debris. An ill-fitting lid and deteriorated gasket caused the contamination. Figure 86 shows a rodent being removed from a water tank.

Figure 85—This spring had insects, rust, and debris in the water.

Figure 86—Tank contaminated by a dead rodent.

Regulatory Issues

The EPA regulates all public drinking water systems by 40 CFR 141 National Primary Drinking Water Regulations. State regulations also must be met. (figure 87).

Figure 87—Regulations.

All USDA Forest Service owned and operated water systems are regulated by FSM 7400, Chapter 20. Forest Service manuals are available at the following Web site: http://fsweb.wo.fs.fed.us/directives/fsm/7400/ .

Routine Sampling Checklist

Sample **ALL** USDA Forest Service owned and operated potable water systems once every full or partial month of operation for total coliform bacteria (BacT sample). Follow the site sampling plan for sample location. A State certified laboratory (lab) must be used for compliance samples. Use the container supplied by the lab to collect the water sample (figure 88). Label the sample container as soon as the sample is collected. The lab analysis must start within 30 hours of sample collection.

Figure 88—Sample container.

The following excerpt is taken from Forest Service Manual 7420.7

421.22a—Routine Sampling

"Perform microbiological testing for total coliform bacteria at a minimum frequency of one routine sample per month for every full or partial calendar month of operation for all systems. Consider each handpump a separate water system.

"This minimum frequency assumes that monthly tests are taken at approximately 30-day intervals. Take samples early in the month to allow sufficient follow-up time.

"A higher frequency of routine sampling is required by NPDWR and the State if the average number of daily users is greater than 1,000 persons per day.

"Take at least one special sample and ensure it tests total coliform-negative, before opening all seasonally operated systems. Special samples do not count in determining Maximum Contaminant Level (MCL) violations or in meeting the monthly sampling requirements.

"Develop a written sample sitting plan for each public water system with a distribution system. The sitting plan should be designed to ensure that the system is routinely sampled at varied representative locations and that contamination in any portion of the distribution system is eventually detected.

"Testing laboratories must be EPA and/or State approved. Collect and handle samples in compliance with laboratory requirements.

"Arrange for the lab to report results to the appropriate staff as soon as possible if a test result is total or fecal coliform-positive.

7421.22b—Follow-up Actions

"1. Public Systems. Whenever a routine sample result is total coliform-positive, take a set of four repeat samples within 24 hours of notification by the lab or State. Take the samples at locations as directed by the State, in accordance with the sample sitting plan, or as follows:

a. One at the same tap where the contamination occurred.

b. One at a downstream tap.

c. One at an upstream tap.

d. One within five service connections of the original sample.

"If the system has only one service connection (such as a handpump), sample according to State direction or collect a single 400-milliliter sample.

"For any routine sample that is total coliform-positive, perform five routine samples during the next month the system is open.

"2. Nonpublic Systems. Whenever a routine sample result is total coliform-positive, take one repeat sample within 24 hours of notification by the lab or State.

"3. All Systems. Temporary closure of a water system for the purpose of performing corrective action or seasonal closure does not relieve the responsibility for compliance with repeat sampling, additional routine sampling, reporting to EPA or the State, and public notification as set forth in the NPDWR and State regulations.

"At sites with water-carried sewage systems, if follow-up action is to close the system, the toilet supply may be left open if all points of drinking, including sinks and showers, can be isolated and shut off. Otherwise, shut off the entire system.

"In the case of a waterborne disease outbreak at a Federally owned water system, contact the Regional Environmental Engineer and the State for special provisions for public notification and monitoring.

"See exhibit 01 for follow-up actions to be initiated within 24 hours based on the results of repeat sampling.

“7421.22b—Exhibit 01
Follow-up Actions For Microbiological Sampling

“Based on the results of the repeat sampling, initiate the appropriate follow-up actions within 24 hours:

SAMPLE RESULT				
ROUTINE SAMPLES	REPEAT SAMPLE(S)	MCL VIOLATION	ACUTE VIOLATION	FOLLOWUP ACTION
TC-	None	No	No	None. Quality satisfactory.
TC+ FC-/EC	TC-	No	No	Public systems must have five routine samples taken the next month the system is open.
TC+ FC-/EC	TC+ FC-/EC	Yes	No	See Action 1.
TC+ FC-/EC	TC+ FC+/EC	Yes	Yes	See Action 2.
TC+ FC+/EC	TC-	No	No	Public systems must have five routine samples taken the next month the system is open.
TC+ FC+/EC	TC+ FC-/EC	Yes	Yes	See Action 2.
TC+ FC+/EC	TC+ FC+/EC	Yes	Yes	See Action 2.
Confluent Growth	None	No	No	Sample invalid. See Action 3.

TC = Total Coliform
EC = E. Coli
FC = Fecal Coliform

\+ = Positive test results
\- = Negative test results

7421.22b - Exhibit 01—*Continued*

"ACTION 1: MCL VIOLATION

"A. Public systems. Notify, consult, and coordinate with the State within 48 hours of being notified of the positive result. Take five routine samples the next month the system is open.

"B. Public and non-public systems. Notify users within 14 days according to appropriate State or NPDWR notification procedures including: posting, hand delivery, or media (newspaper, radio, or television), depending on the classification of the system and corresponding State direction. For non-public systems where State or EPA regulations have not established public notification procedures, notify users by posting signs at the facility, visitor information site, District Office, or any other site deemed appropriate. For systems serving resident populations, make notification by letter, in addition to posting signs.

"1. Administrative systems. Search for the source of contamination by doing a condition survey (FSM 7421.14). Take corrective action when the source of contamination is found. Take daily special samples until two consecutive special samples are TC negative. If three samples are TC positive (routine, repeat, and one special sample), issue a temporary boil water notice or close the system. The temporary boil notice shall include water used for drinking, food preparation, and bathing. Boiling water shall be a temporary measure (not to exceed 30 days).

If the need for boiling will exceed 30 days, obtain appropriate engineering approval. Rescind the notice or open the system only after the problem has been corrected and two consecutive daily special samples are TC negative.

"2. Recreation systems. Search for the source of contamination by doing a condition survey (FSM 7421.14). Take corrective action when the source is found. Take daily special samples until two consecutive special samples are TC negative. If three samples are TC positive (routine, repeat, and one special sample), close the system. At sites with water-carried sewage systems, the toilet supply may be left open if all points of drinking, including showers and sinks, can be isolated and shut off. Otherwise, shut off the entire system. Open the system only after the problem has been corrected and two consecutive daily special samples are TC negative.

"ACTION 2: ACUTE VIOLATION

"A. Public systems. Notify, consult, and coordinate with the State within 48 hours of being notified of the positive result. Take five routine samples the next month the system is open.

"B. Public and non-public systems. Notify users within 72 hours according to appropriate State or NPDWR notification procedures including: posting, hand delivery, or media (newspaper, radio or television), depending on the classification of the system and corresponding State direction. For non-public systems where State or EPA regulations have not established public notification procedures, notify users by posting signs at the facility, visitor information site, District Office, or any other site deemed appropriate. For systems serving resident populations, make notification by letter, in addition to posting signs.

1. Administrative systems. Issue a temporary boil water notice or close the system. The temporary boil notice shall include water used for drinking, food preparation, and bathing. Boiling water shall be a temporary measure (not to exceed 30 days). If the need for

boiling exceeds 30 days, obtain appropriate engineering approval. Search for the source of contamination by doing a condition survey (FSM 7421.14). Take daily special samples. Rescind the notice or open the system only after the problem has been corrected and two consecutive daily special samples are TC negative.

2. Recreation systems. Close the water system. At sites with water-carried sewage systems, the toilet supply may be left open if all points of drinking, including showers and sinks, can be isolated and shut off. Otherwise, shut off the entire system. Search for the source of contamination by doing a condition survey (FSM 7421.14). Take corrective action when the source is found. Open the system only after the problem has been corrected and two consecutive daily special samples are TC negative.

"ACTION 3: CONFLUENT GROWTH

"The sample is invalid. Take another routine sample at the same location within 24 hours of being notified of the invalid result. If the second sample has confluent growth, search for the cause and correct it. Continue sampling until a valid sample is obtained. If the valid sample is TC positive, follow actions as outlined in FSM 7421.22b."

Checklist:

__ 1. Test **ALL** seasonally operated USDA Forest Service water systems for coliform before the system is opened. If the system tests positive for coliform, do not open the system until the source of contamination is located and corrected.

__ 2. Test all public water systems annually for nitrate and nitrite.

__ 3. Submit, or have the laboratory submit all required tests on public water systems to the State.

Proper Microbiological Sampling Techniques

Proper sampling techniques are extremely important in obtaining accurate water quality information. Poor sampling techniques may lead to test results indicating bacteriological contamination of your water when the water is actually safe. Consistently good sampling techniques will save time and money.

- ❒ Ensure that the water in your sample is representative of the water you are providing for consumption.
  - ✦ Follow the sampling plan for the system, rotating among designated sampling ports as prescribed. Designated sampling ports should be faucets that are used frequently.
  - ✦ After any repairs, ensure that the system has been disinfected, flushed, and is operating normally before drawing samples.
- ❒ Sample early in the month to allow time for repeat samples if necessary.
- ❒ Use the right bottle the right way.
  - ✦ Use only clean sample bottles provided by the lab specifically for bacteriological sampling.
  - ✦ Do not rinse the bottle before sampling. A chemical placed in the bottles by the lab is necessary for correct test results.
  - ✦ Do not open the bottle before you are ready to take the sample.
- ❒ Ensure that sampling ports do not contaminate the water.
  - ✦ To ensure the best sampling ports (faucets), check for these features:
    - ✓ Nonswiveling spout.
    - ✓ No aerator or splash guard.
    - ✓ No leaks or drips.
    - ✓ Plain spout (no threads for attaching hoses).

- ✓ No vacuum breakers.
- ✓ No attached water purifiers or other assemblies.
- ✓ CLEAN and sanitized.
- ✓ Inside a building unless there are not any inside faucets.

✦ If the sampling ports do not meet all these requirements, do the following:

- ✓ If there are aerators, splash guards, screw-on vacuum breakers, water purifiers, or other assemblies, REMOVE THEM before sanitizing, flushing the line, and drawing the sample.
- ✓ If the spout is threaded or if you are not sure it is sanitary, apply a bleach or hypochlorite solution that contains at least 1 teaspoon bleach to 1 quart water to the end of the spout (may need to use a disinfected brush wetted with the bleach solution to make sure threads are clean and disinfected), then let the water run longer during flushing.
- ✓ Because there is no mitigation possible for swivel spouts, for leaking or dripping faucets, or for built-in vacuum breakers, do not use these faucets.

❒ Flush the lines so that the sample represents the water in the main.

✦ Run the water at full flow for 2 to 3 minutes.

✦ When sampling from a mixing faucet, run the hot water for 2 to 3 minutes, then the cold water for 2 to 3 minutes.

✦ When sampling from a handpump, pump water for at least 5 minutes to flush.

❒ Keep the sample bottle sanitary.

✦ Keep a good grip near the bottom of the bottle.

✦ Do not stick your finger or anything else inside the bottle, on the threads, or in the lid.

✦ Do not set the lid down; hold it by the outside surface while you fill the bottle.

❒ Use a small water stream so it does not splash or overflow.

✦ A stream about the diameter of your little finger is just right.

✦ Gently fill the bottle, leaving a 1/2- to 1-inch air space.

✦ Immediately replace the lid and tighten it so the bottle will not leak.

❒ Fill out the sample bottle lab label and accompanying form completely. Keep a copy for your permanent records.

✦ The information accompanying the sample must include:

- ✓ Date and time sampled.
- ✓ Sampling location.
- ✓ Name of person collecting the sample.
- ✓ Type of sample (routine, repeat/check, or special/construction - terms may vary among jurisdictions).
- ✓ Free chlorine residual, if system is chlorinated.

❒ Deliver the sample to the lab immediately. The sample must be tested within 48 hours to be valid, and many labs will not accept samples more than 30-hours old.

✦ Be sure to send the lab form with the sample.

✦ Keep the sample cool.

- ✓ If mailing the sample, use a container provided or approved by the lab.
- ✓ Only use sealed cold packs, do not use ice. Ice can melt, infiltrate the sample bottle, and contaminate the sample.

Remember that the goal is NOT to "get a passing test." The goal is to serve good water. Bacteriological testing is just a tool that alerts you to potential system problems and helps you find and fix them.

Checklist

Every USDA Forest Service owned and operated water system:

- ❒ has a site sampling plan (see appendix B).
- ❒ uses an EPA or State certified laboratory to analyze samples.
- ❒ has a permanent folder that contains the results of all tests.
- ❒ is entered into INFRA

Primacy Agency Address:

_____

_____

_____

Phone: _____

Laboratory Address:

_____

_____

_____

Phone: _____

USDA Forest Service

Regional Office Sanitary Engineer:

_____

_____

_____

Phone: _____

REPORTING, PUBLIC NOTIFICATION, AND RECORDKEEPING

Reporting Requirements

Prompt reporting saves money. The primacy agency (usually the State or county health department) or the EPA can impose large fines on any public water system that fails to meet reporting requirements.

- Managers of every USDA Forest Service public water system must report to the primacy agency the results of all required tests or analysis within 10 days following the end of the monitoring period (CFR 141.31).
- Managers of every USDA Forest Service public water system must report to the primacy agency within 24 hours the failure to comply with any national primary drinking water regulation, including failure to monitor.
- Managers of every USDA Forest Service seasonally operated public water system must inform the primacy agency when the system is closed for the season. A system that does not report closing will be liable for failure to monitor.
- Managers of every USDA Forest Service water system must report to the forest engineer, the USDA Forest Service regional environmental engineer, and the primacy agency any waterborne disease outbreak at a federally owned water system.

Public Notification

Public notification is required for any violation of the national primary drinking water act. Recreational water systems can post the notification at entry stations, on bulletin boards in prominent locations, or on hydrants (figure 89). USDA Forest Service offices may notify employees by hand delivery and by posting the notice in a prominent location. Notification templates are included in appendix A.

Figure 89—Post public notification in a prominent location in recreation areas.

Notification must be posted or delivered within 72 hours for any violation that poses an acute health risk, nitrate or nitrite, fecal coliform, or a waterborne disease outbreak.

Notification must be posted or delivered within 14 days for all other violations. Notices must remain posted as long as the violation exists.

Recordkeeping

Recordkeeping is an important part of maintaining a water system.

Every USDA Forest Service water system must have a permanent case folder. This case folder will be started by the engineer and maintained by the water system operator and/or engineer.

- FSM 7413.9. Requires that permanent case folders be established and maintained for each inventoried potable water system at forest supervisor or district ranger offices. Regional offices shall specify case folder requirements.
- Interim directive FSM 7420-2004-1 specifies what information is required to be kept in the permanent case folder and the organization of the information.

Every USDA Forest Service water system must be entered in the USDA Forest Service Data Base (INFRA) for upward reporting requirements. The data must be kept up to date.

For every USDA Forest Service public water system, maintain at the site or at the district office (CFR 141.33):

- Bacteriological tests for 5 years.
- Chemical analysis for at least 10 years.
- Records of violation and corrective action for 3 years.
- Sanitary surveys for 10 years.
- Records of variances or exemptions for 5 years following the expiration of the variance or exemption.
- Any other information required by the primacy agency.

Checklist

❒ Where is the permanent case folder?

_____

❒ Is the permanent case folder up to date?

_____

❒ Who is the regional environmental engineer or water/wastewater engineer?

_____

❒ Is the system entered into INFRA?

_____

❒ Is the INFRA data current and complete?

_____

❒ Where are the system operation files?

_____

❒ Are the system operation files current and complete?

_____

MATH REVIEW

Most math problems a water treatment plant operator solves requires plugging numbers into formulas and calculating the answer. When working with formulas, here are some simple rules to follow.

- Work from left to right.
- Do anything in parenthesis first.
- Do multiplication and division in the numerator (above the line) and in the denominator (below the line), then do addition and subtraction in the numerator and denominator.
- Divide the numerator by the denominator last.

Volume

The volume of a tank in cubic feet is equal to the tank area multiplied by the tank height. The capacity in gallons is equal to the volume in cubic feet multiplied by 7.48 gallons per cubic foot.

For a rectangular tank:
To find the capacity of a rectangular or square tank:

Multiply length (L) by width (W) to get area (A).

Multiply area by height (H) to get volume (V).

Multiply volume by 7.48 gallons per cubic foot to get capacity (C).

A = L x W
V = A x H
C = V x 7.48

Find the capacity of a rectangular tank 15 feet (ft) long, 12 ft wide, and 10 ft high:

A = 15 ft x 12 ft = 180 square feet (ft^2)
V = 180 ft^2 x 10 ft = 1,800 cubic feet (ft^3)
C = 1,800 ft^3 x 7.48 gal/ft^3 =13,464 gal

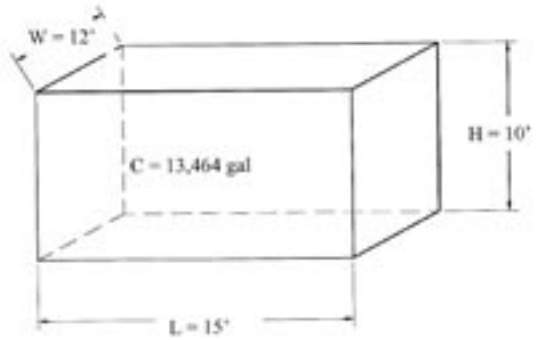

For a circular tank:
Area (A) =
π (3.14) x diameter squared (D^2) / divided by 4
Volume (V) = A x H
Capacity (C) = V x 7.48 gal/ft^3

A = [π x (D^2)/4]
V = A x H
C = V x 7.48

Find the capacity of a circular tank with a diameter of 15 ft and a height of 12 ft:

A = [3.14 x (15 ft^2)/4] = 177 ft^2

V = 177 ft^2 x 12 ft =2,120 ft^3

C = 2,120 ft^3 x 7.48 gal/ft^3 = 15,900 gal

The capacity in gallons of a circular tank can also be written as one formula:

C_{gal} = (π x D^2)/4 x H x 7.48

= (3.14 x 15 ft^2)/4 x 12 ft x 7.48 gal/ft^3

= 15,900 gal

**Your answer may vary slightly due to rounding π

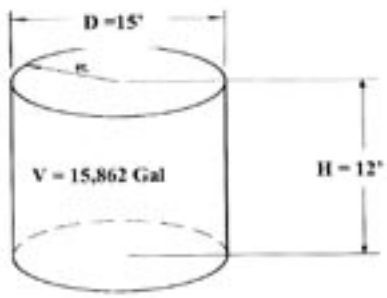

Find the capacity in gallons of a horizontal circular tank that has a diameter of 8 ft and is 12 ft long.

A = (π x D^2)/4 = (3.14 x 8 ft^2)/4 = 50 ft^2

V = A x L = 50 ft^2 x 12 ft = 603 ft^3

C_{gal} = V x 7.48 gal/ft^3 = 603 ft^3 x 7.48 gal/ft^3

= 4,512 gallons

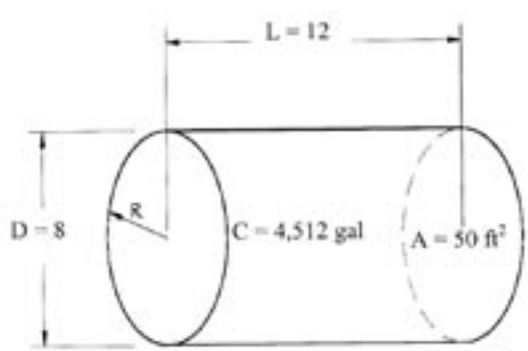

For an oval tank:
To find the gallons in an oval tank:

Multiply the height by width by π (3.14) divided by 4 to get the area of the oval.

Multiply the area of the oval by tank length to get the volume in cubic feet.

Multiply the volume by 7.48 gal/ft^3 to get the capacity in gal.

Find the capacity of an oval tank 3-ft high, 5-ft wide, and 8-ft long.

A = H x W x π/4

= 3 ft x 5 ft x 3.14/4

= 11.8 ft^2

V = A x L

= 11.8 ft^2 x 8 ft

= 94 ft^3

C = V x 7.48 gal/ft^3

= 94 ft^3 x 7.48 gal/ft^3

= 705 gal

The capacity of an oval tank can also be written as one formula:

C = (H x W x 3.14/4) x L x 7.48 gal/ft^3

= (3 ft x 5 ft x 3.14/4) x 8 ft x 7.48 gal/ft^3

= 705 gal

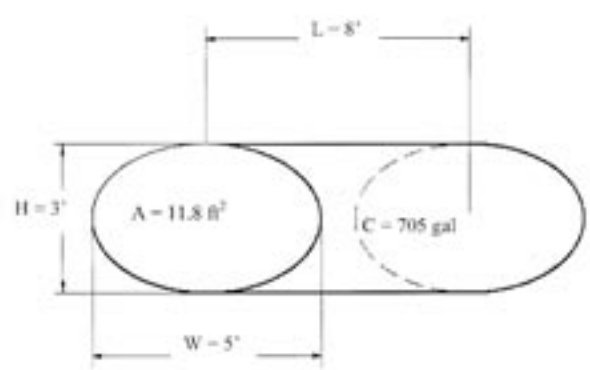

Capacity, Metric

The capacity of a tank in cubic meters (m^3) is equal to the tank area multiplied by the tank height. The volume in kiloliters (kL) is equal to the volume in m^3 multiplied by 1 kL/ m^3. 1 kL is equal to 262.4 gal.

To find the volume of a rectangular or square tank:

Multiply length by width to get area.

Multiply area by height to get volume.

1 m^3 is equal to 1-kL volume.

Find the volume of a rectangular tank 3-m long, 2-m wide, and 2-1/2–high.

A = area, Square meters (m^2)

V = volume, cubic meters (m^3)

L = length, meters (m)

W = width, meters (m)

H = height, meters (m)

V = volume, cubic meters (m^3)

C_{kL} = capacity, kiloliters (kL)

A = L x W = 3 m x 2 m = 6 m^2

V = A x H = 6 m^2 x 2.5 m = 15 m^3

C_{kL} = 15 kL

These steps can be combined in one formula:

C_{kL} = L x W x H x 1 kL/ m^3

= 3 m x 2 m x 2.5 m x 1 kL/ m^3

= 15 kL

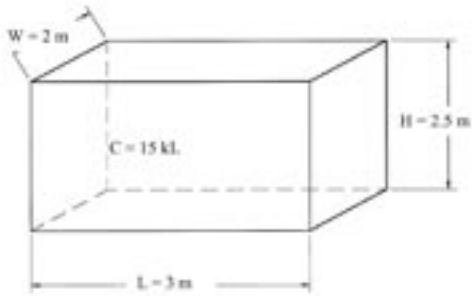

Concentration

Concentration is usually expressed as milligrams per liter (mg/L), or parts per million (ppm). Because the weight of 1 cubic centimeter of water is 1 gram, and there are 1 million milligrams in one liter of water, water treatment operators can use these terms interchangeably.

Feed Rate

Feed rate is the amount of chemical metered into the water. Chemical feed rate needs to be calculated when selecting a metering pump, when a change in concentration is needed, and to ensure that an adequate amount of chemicals are on hand for uninterrupted operation.

To calculate feed rate the basic formula (pounds formula) is:
Feed rate (pounds per day, lb/day) = flow (million gallons per day, mgd) times dose (milligrams per liter, mg/L) times 8.34 pounds per gallon.

The pounds formula is also used to determine how much liquid solution, such as sodium hypochlorite, is needed.

Sodium hypochlorite (chlorine bleach) is available in strengths from 5 to 15 percent. To determine how much you need to disinfect a tank, you must know the strength.

The pounds formula for liquids is:

Gallons needed = (amount of water to be treated divided by 1 million) x required dose (mg/L) x 100/solution strength (in percent).

To find the amount of hypochlorite to use, multiply tank volume in gallons/1,000,000 times the desired chlorine dose in mg/L divided by solution strength, percent.

To find the amount of 5 percent hypochlorite to use in a 13,500-gallon tank to achieve a chlorine dose of 50 mg/L:
13,500 gallons/1,000,000 x 50 mg/L x 100 /5 = 13.5 gallons hypochlorite

To find the amount of 5 percent hypochlorite to use in a 13,500-gallon tank to achieve a dose of 1 mg/L:
13,500 gallons/1,000,000 x 1 mg/L x 100/5
= 0.27 gallons, or about one quart sodium hypochlorite.

To find how much 5.25 percent hypochlorite is needed to disinfect 1,000 gallons at a dose of 2 mg/L:
Gallons of hypochlorite needed
= (1,000 gal/1,000,000) x 2 mg/L x (100/5.25)
=0.038 gallons, about 5 ounces

To find how much 5.25 percent hypochlorite is needed to disinfect a well with a 12-inch casing and static water level of 50 feet with a 50-mg/L dose, you must first find the volume (V) of water to be treated.

$V = (\pi \times D^2)/4 \times H \times 7.48$

$V = (3.14 \times 1\ ft^2)/4 \times 50\ ft \times 7.48$

$= 294$ gal

Amount of hypochlorite needed

= (294 gal/1,000,000) x 50 ppm x (100/5.25)

=0.28 gal, about 1 quart.

Equivalents

There are 4 quarts in a gallon,
so 1 quart = 0.25 gallon.

There are 16 cups in a gallon,
so 1 cup = 0.0625 gallons.

There are 128 fluid ounces in a gallon,
so 1 ounce = 0.0078 gallons.

1 teaspoon = 5 mL

1 fluid ounce = 30 mL

1 quart = 0.95 liters

1 gallon = 3.8 liters

WATER OPERATOR REFERENCE MATERIAL

The following publications and Web sites contain useful information for water system operators.

Troubleshooting Guide for Small Groundwater Systems with Hypochlorination, EPA, 1999.

The National Drinking Water Clearing House has information available for small water systems. They also publish *On Tap*, a magazine for small water system operators. *On Tap* is available at no cost. See:
http://www.nesc.wvu.edu/ndwc/.

Operator Basics is a Web-based educational program designed to assist operators of small systems pass certification exams. It also contains a section on Math for Operators. Visit:
http://water.montana.edu/training/gwb/.

The EPA has Web-based educational material available that covers regulations and compliance issues. See:
http://www.epa.gov/safewater/dwa/electronic/ematerials.html.

The Rural Water Association has training available for system maintenance as well as certification programs. Some Rural Water Associations have Circuit Rider Training and Small system assistance available. The National Rural Water Association has links to the State associations. Visit:
http://www.nrwa.org/.

The USDA Forest Service Handbook for water systems is FSH 7409.11, Chapter 40. Handbooks may be downloaded from:
http://fsweb.wo.fs.fed.us/directives/.

The USDA Forest Service Washington Office also maintains information and links at:
http://fsweb.wo.fs.fed.us/eng/programs/water/index.htm.

Information and assistance for INFRA is available at:
http://pcs27.f16.r6.fs.fed.us/infra/.

DEFINITIONS

Air Gap—An open vertical drop that separates a potable drinking water supply from any other water.

Alkalinity—The capacity of water to neutralize acids.

Anaerobic—A condition in which atmospheric or dissolved molecular oxygen is not present in the aquatic environment.

Aquifer—A natural underground layer of porous, water bearing material (sand, gravel) usually capable of yielding a large supply of water.

Artesian—An aquifer where the water is under pressure and will rise above the level of its upper confining surface if given the opportunity.

Backflow—A reverse flow condition, created by a difference in water pressures that causes water to flow back into the distribution pipes of a potable water supply from any source other than the intended source.

Backsiphonage—A form of backflow caused by a negative pressure within a water system.

Chlorinator—A metering device which adds chlorine to water.

Chlorine Residual—The concentration of chlorine present in water after the chlorine demand has been satisfied.

Clear Well—A reservoir for storage of treated water.

Coliform—A group of bacteria found in the intestines of warm-blooded animals and also in plants, soil, and air. Fecal coliform is a specific class of bacteria found in the intestines of warm-blooded animals.

Confined Space—A confined space is a space that:

- Is large enough and configured such that an employee can bodily enter and perform assigned work; and
- Has limited or restricted means of entry or exit; and
- Is not designed for continuous employee occupancy. (CFR Title 29 Part 1910.146).

Confined Space, Permit-required Entry—A confined space that has one or more of the following characteristics:

- Contains, or has the potential to contain, a hazardous atmosphere
- Contains a material with the potential to engulf or entrap an entrant
- Has an internal configuration such that an entrant could be trapped or asphyxiated by inwardly converging walls or by a floor that slopes downward and tapers to a smaller cross-section
- Contains any other recognized serious safety or health hazard. (CFR Title 29 Part 1910.146)

Contamination—The introduction into water of a toxic material, pathogenic organism, or other deleterious agents that makes the water unfit for its intended use.

Cross Connection—A connection between a potable water system and an unapproved water supply.

Cryptosporidium—A waterborne intestinal parasite that causes diarrhea and cramps that can be present in surface water.

Diatomaceous Earth Filter—A precoat filter using a fine siliceous material composed of the skeletal remains of diatoms approved for treating surface water.

Draw Down—The drop in water level when water is being pumped from a well.

EPA—The U.S. Environmental Protection Agency is a regulatory agency responsible for implementing the Safe Drinking Water Act.

Fractures—A crack or opening in the surface of the earth that allows surface water to enter subsurface water.

Frost Line—The lower ground depth of frost penetration.

Giardia—A waterborne intestinal parasite that causes diarrhea and cramps that can be present in surface water.

Gravity Storage Tank—Water storage tanks that provide water system pressure by gravity.

Ground Water—Water in an underground aquifer.

Ground Water Under the Direct Influence of Surface Water—A ground water contaminated with surface runoff such as through fractures, improper well closures, or mining activity.

Hardness—A characteristic of water caused primarily by calcium and magnesium ions. Hardness causes deposits and scale to form on pipes and fixtures.

Iron—Metallic element number 26. This metal causes a rust stain and metallic taste when present in water in concentrations above 0.3 milligrams per liter.

Jet Pumps—A pump that utilizes a venturi effect to move water.

Manganese—This metal causes black stains and a metallic taste when present in water in concentrations above 0.05 milligrams per liter.

Nephelometric Turbidity Units (NTU)—The units of measure of turbidity, as made with a turbidimeter.

Nonpublic Water System—A potable water system that does not meet the definition of a public system.

Pollutants—Organic or inorganic material that deteriorates the water's quality.

Public Water System—A potable water system that serves at least 25 people at least 60 days a year or has at least 15 service connection.

Residual Chlorine—The concentration of chlorine present in water after the demand has been satisfied.

Safe Drinking Water Act—An Act passed by the U.S. Congress in 1974, administered by the EPA. Referred to as the SDWA.

Sanitary Protection—Any means of protecting water from contamination.

Sanitary Seal—A wellhead cover used at the top of the well casing to prevent contaminated water or other material from entering the well.

Sanitary Survey—A detailed evaluation or inspection of a source of water supply and all treatment, storage, and distribution facilities to ensure protection of the water from all pollution sources. A sanitary survey must be performed by a qualified engineer.

State Regulatory Agency—The State agency with regulatory authority over public water systems.

Surface Water—Water on the surface of the earth such as in lakes, rivers, or streams.

Turbidity—A condition in water caused by the presence of suspended matter, resulting in the scattering and absorption of light rays, reported as NTUs.

Water Table—The upper surface of the zone of saturation of ground water in an unconfined aquifer.

Wellhead Protection Area—The surface and subsurface area surrounding a water well protected from potential contamination.

Yield—The quantity of water that can be collected from a water source. Example: a spring may yield 10 gallons per hour.

Zone of Saturation—The level below the top of the ground water table.

Acknowledgements

Many people contributed their knowledge, assistance, and photographs toward the completion of this guide.

Special thanks goes to Mary Dereske, P.E.; Satgur Klar, P.E.; John Leffel; Sarah Baker, P.E.; Kathy Snodgrass; Craig Lasser, P.E.; Jim Grubb, P.E.; Jay Westlake; Donna Wians, P.E.; and others for providing feedback, forms, photos, and technical review.

Kathy Snodgrass supplied public notification forms.

Satgur Klar provided sampling plan examples.

Susan Christensen helped with illustrations.

SDTDC's national publications are available on the Internet at:
http://www.fs.fed.us/eng/pubs.

USDA Forest Service and U.S. Department of the Interior Bureau of Land Management employees also can view SDTDC's videos, CDs, and individual project pages on their internal computer network at:
http://fsweb.sdtdc.wo.fs.fed.us/.

APPENDIX A—PUBLIC NOTIFICATION

The following forms may be used to notify the public that water tests were positive for bacteria, or required tests were not done, unless the State has forms that it requires water systems to use.

Public Notification, Boil Water Notice

Public Notification, Missed Sample

DRINKING WATER WARNING

(*Water System Name*) water is contaminated with [E. coli/fecal coliform]

BOIL YOUR WATER BEFORE USING

[E. coli/fecal coliform] bacteria were found in the water supply on (date). These bacteria can make you sick and are a particular concern for people with weakened immune systems.

What Should I do?
Until we have corrected the contamination, use boiled, chlorinated, or commercially available bottled water for drinking, making ice, brushing teeth, washing dishes, and food preparation. Boiling kills bacteria and other organisms in the water. To adequately disinfect water by boiling, bring it to a full rolling boil and let it boil for one minute. Let it cool before using. To adequately disinfect water by chlorination, use only regular 5¼% hypochlorite bleach. Do not use scented bleaches, colorsafe bleaches, or bleaches with added cleaners. Add 16 drops (about 3 teaspoons) of liquid bleach per gallon of water, stir, and let stand for 30 minutes. If the water does not have a slight bleach odor, repeat the dosage and let stand for another 15 minutes.

What Does This Mean?
[E. coli/fecal coliform] are a bacteria whose presence indicates that the water may be contaminated with human or animal wastes. Microbes in these wastes can cause diarrhea, cramps, nausea, headaches, or other symptoms. They may pose a special health risk for infants, young children, some older people, and people with severely compromised immune systems. People at increased risk should seek advice about drinking water from their health care providers. These symptoms may also have causes other than contaminated drinking water. If you experience these symptoms persistently, you may want to seek medical advice.

What Happened? What Was Done?
Bacterial contamination can occur if surface water enters the drinking water source, if there is a break or back siphonage in the water lines, or if storage tanks become dirty or are entered by insects or animals.

(Describe what is being done to fix the problem)

We will let you know when tests show no bacteria and you no longer need to boil your water. This should occur by *(date)*.

FOR MORE INFORMATION, CONTACT *(person's name)*, the *(water system name)* water system operator, at *(phone number)* or *(person's name)*, the *(unit name)* facilities engineer, at *(phone number)*. General information about lessening the risk of infection by microbes is available from the EPA Safe Drinking Water Hotline at 1-800-426-4791.

State Water System Number: _____ Date of Notice: _____

Note: Accidentally missing a required monthly bacti test or a test result showing presence of coliform bacteria only (no e.coli or fecal coliform) does not require a boil water notice. However, you must inform residents & employees in accordance with State notification requirements. You may use this template:

IMPORTANT INFORMATION ABOUT YOUR DRINKING WATER

[We Missed a Test at *(System Name)*] [Tests Showed Coliform Bacteria in *(System Name)* Water]

Our water system recently violated a drinking water standard. Although this incident was not an emergency, you have a right to know what happened and what we did to correct this situation.

We routinely monitor for drinking water contaminants. We took (number) samples to test for the presence of coliform bacteria during (month). **[This was less than the *(number)* samples that were required, and it is possible that we failed to detect coliform bacteria that may have entered the system.] [*(Number/percentage)* of our samples showed the presence of total coliform bacteria. The standard is that no more than 1 sample per month may do so.]**

What should I do?
You do not need to boil your water. People with severely compromised immune systems, infants, and some elderly people may be at increased risk and may want to contact their health care provider for additional guidance.

What does this mean?
This is not an emergency. If it had been, you would have been notified immediately. Coliform bacteria are generally not harmful themselves. Coliforms are bacteria that are naturally present in the environment and are used as an indicator that other, potentially-harmful, bacteria may be present.

Usually, coliforms are a sign that there could be a problem with the system's treatment or distribution system. Bacterial contamination can occur if surface water enters the drinking water source, if there is a break or back siphonage in the water lines, or if storage tanks become dirty or are entered by insects or animals. Whenever we detect coliform bacteria in any sample, we do follow-up testing to see if other bacteria of greater concern, such as fecal coliform or E. coli, are present. **[We did not find any fecal coliform or E. coli in our subsequent testing. Testing shows no current presence of coliform bacteria.]**

What happened? What was done?
(Describe corrective action.)

FOR MORE INFORMATION, CONTACT *(person's name)*, the *(water system name)* water system operator, at *(phone number)* or *(person's name)*, the *(unit name)* facilities engineer, at *(phone number)*. General information about lessening the risk of infection by microbes is available from the EPA Safe Drinking Water Hotline at 1-800-426-4791.

Please share this information with all the other people who drink this water, especially those who may not have received this notice directly (for example, other people in your home, seasonal workers, or people in crew quarters). You can do this by posting this notice in a public place or distributing copies by hand or mail.

State Water System Number: _____ Date of Notice: _____

APPENDIX B—SAMPLING PLANS

The following templates may be used to create a sampling plan unless the State has a required format that it requires water systems to use.

BACTI Plan Public NTNC Systems- Multiple Buildings

BACTI Plan Public NTNC Systems- Single Building

BACTI Plan NPNT System

BACTI Plan Hand Pump Public Systems

BACTI Plan Public Transient Recreational Area System

Bacteriological Monitoring Plan
(For Administrative Complexes)

Public Water System Name: Smokey Bear Administrative Complex

PWSID Number: NCxxxxxxx (State initials and seven digits)

FS System ID: xxxxxxx (From INFRA)

I. Purpose

The purpose of this Bacteriological Monitoring Plan is to identify coliform sample locations and establish monitoring requirements to comply with the US EPA Total Rule (TCR) and/or the Forest Service Manual (FSM 7420).

II. Responsible Charge

The following person will normally be responsible for collecting samples under this program (name, title, address, and phone):

_____ _____

_____ _____

III. Program Elements

1. Basic Routine Monitoring

The Smokey Bear Aministrative Complex water system serves an office building, a residence, and a work center and is classified as a Public Nontransient Noncommunity (NTNC) water system. The water system is required by the State and the FSM 7420 to collect one (1) routine water sample/ month for total coliform. Two (2) routine sample locations have been identified on attachments 1 and 2. One routine sample shall be collected every month from one of the two designated locations. If a routine sample is invalidated by the lab, a replacement routine sample is required. It is recommended that routine samples be collected in the beginning of the month.

2. Increased Routine Monitoring

Increased monitoring is triggered when monthly samples show signs of contamination. If any month shows a coliform positive routine or a coliform positive repeat sample, five (5) routine samples are required during the following month. The samples shall be taken at reasonably evenly spaced time intervals throughout the month*.

**Note: If the State approves, all five routine samples may be taken at one time.*

(Do not confuse this increased routine monitoring with repeat monitoring in the next section. Repeat monitoring is required to further investigate a positive sample and has to be completed within 24 hours of notification of a positive sample). The system goes back to basic monitoring (1 sample/month) only if the previous month is totally clean (i.e, no positive samples).

3. Repeat Monitoring

Four (4) repeat samples are required within 24 hours of notification of a positive sample by the lab or the State.

a. One repeat sample shall be collected from the same site which had positive routine sample.
b. One repeat sample shall be collected downstream of the positive routine site.
c. One repeat sample shall be collected upstream of the positive routine site.
d. One sample can be collected from anywhere in the system including other identified sites on the plan.

4. Special Monitoring

Sometimes samples are collected for other reasons than compliance, or to make sure that system is safe before placing into service (especially seasonal systems). The bacteriological samples which are collected for special purposes must be marked as special samples on the sample collection form. If these samples are not marked as special samples, they may be confused by the State for monthly compliance samples.

IV. Attachments

Attachment 1: Repeat and Routine Monitoring Locations

Attachment 2: Distribution System Map

V. Bacteriological Monitoring Plan Prepared By:

Name	*Signature*
Title	*Date*

ATTACHMENT 1

REPEAT AND ROUTINE MONITORING LOCATIONS

Water System: Smokey Bear Administrative Complex

Months	**Routine Sample Site**	**Repeat Sample Site** (If routine sample is positive)
Jan, Mar, May, Jul Sept, Nov	Interpretive Center	Interpretive Center (same site) Residence (upstream site) Lab (downstream site) Office Bathroom (any other site)
Feb, April, Jun, Aug, Oct, Dec	Residence	Residence (same site) Office Bathroom (upstream site) Interpretive Center (downstream) Lab (any other site)

ATTACHMENT 2

DISTRIBUTION SYSTEM MAP
SHOWING ROUTINE AND REPEAT MONITORING SITES

Water System : Smokey Bear Administrative Complex

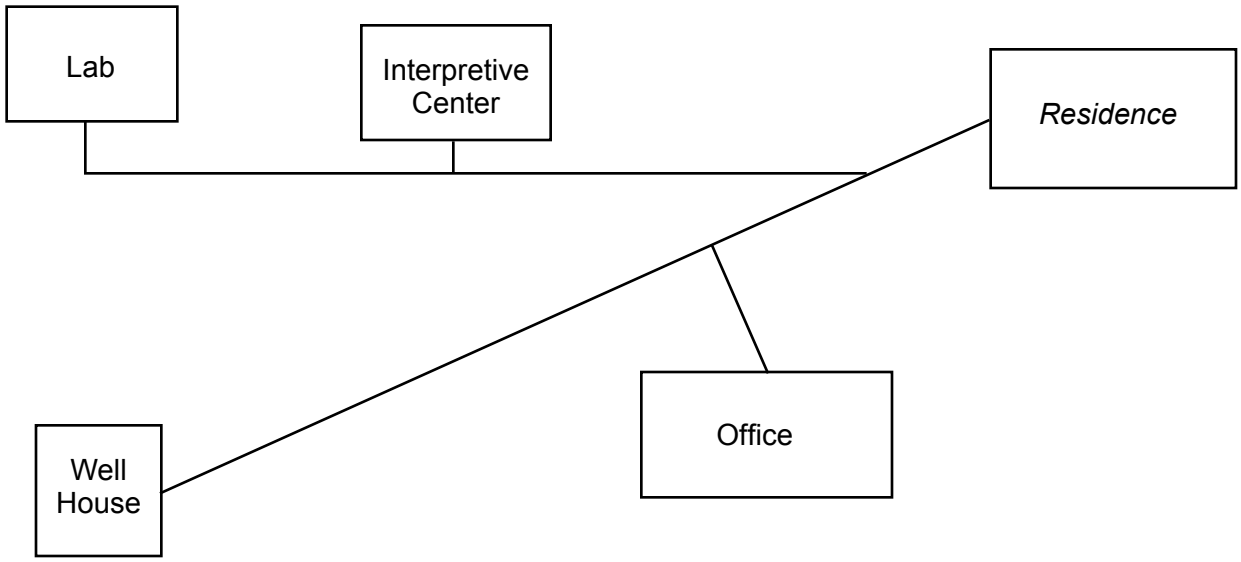

Bacteriological Monitoring Plan
(For Administrative Sites)

Public Water System Name: Smokey Bear District Ranger Office

PWSID Number: NCxxxxxxx (State initials and seven digits)

I. Purpose

The purpose of this Bacteriological Monitoring Plan is to identify coliform sample locations and establish monitoring requirements to comply with the EPA Total Coliform Rule (TCR) and/or the Forest Service Manual (FSM 7420).

III. Responsible Charge

The following person will normally be responsible for collecting samples under this program (name, title, address, and phone):

_____ _____

_____ _____

III. Program Elements

1. Basic Routine Monitoring

The Smokey Bear District Ranger Office water system serves the district office and is classified as a public Nontransient Noncommunity (NTNC) water system. The water system is required by the State to collect one (1) routine water sample per month for total coliform. Two (2) routine sample locations have been identified within the office building. One routine sample shall be collected every month from one of the two designated locations. If a routine sample is invalidated by the lab, a replacement routine sample

2. Increased Routine Monitoring

Basic monitoring is triggered when monthly samples show signs of contamination. If any month shows a coliform positive routine or a coliform positive repeat sample, five (5) routine samples are required during the following month. The samples shall be taken at reasonably evenly spaced time intervals throughout the month*.

**Note: If the state approves, all five samples may be taken at one time.*

(Do not confuse this increased routine monitoring with repeat monitoring in the next section. Repeat monitoring is required to further investigate a positive sample and has to be completed within 24 hours of notification of a positive sample). The system goes back to basic monitoring (1 sample/month) only if the previous month is totally clean (i.e. no positive samples).

3. Repeat Monitoring

Four (4) repeat samples shall be collected within 24 hours of notification of a positive sample by the lab, or the state from sites identified as repeat sites on attachment 1. All repeat samples shall be collected at the sametime.

4. <u>Special Monitoring</u>

Sometimes samples are collected for other reasons than compliance, or to make sure that system is safe before placing into service. The bacteriological samples which are collected for special purposes must be marked as special samples on the sample collection form. If these samples are not marked as special samples, they may be confused by the state for monthly compliance samples.

IV. Attachments

Attachment No.1: Routine and Repeat Monitoring Locations

V. Bacteriological Monitoring Plan Prepared By:

Name	*Signature*
Title	*Date*

ATTACHMENT NO. 1

ROUTINE AND REPEAT MONITORING SITES

Month	Routine Sites	Repeat Sample Sites	
Jan	Men's bathroom	Men's bathroom (2 samples) Lunchroom (2 samples)	
Feb	Men's bathroom	Men's bathroom (2 samples) Lunchroom (2 samples)	
Mar	Men's bathroom	Men's bathroom (2 samples) Lunchroom (2 samples)	
Apr	Men's bathroom	Men's bathroom (2 samples) Lunchroom (2 samples)	
May	Men's bathroom	Men's bathroom (2 samples) Lunchroom (2 samples)	
Jun	Men's bathroom	Men's bathroom (2 samples) Lunchroom (2 samples)	
Jul	Men's bathroom	Men's bathroom (2 samples) Lunchroom (2 samples)	
Aug	Men's bathroom	Men's bathroom (2 samples) Lunchroom (2 samples)	
Sep	Men's bathroom	Men's bathroom (2 samples) Lunchroom (2 samples)	
Oct	Men's bathroom	Men's bathroom (2 samples) Lunchroom (2 samples)	
Nov	Men's bathroom	Men's bathroom (2 samples) Lunchroom (2 samples)	
Dec	Men's bathroom	Men's bathroom (2 samples) Lunchroom (2 samples)	

Bacteriological Monitoring Plan
(For Administrative Sites Nonpublic Systems)

Water System Name: Smokey Bear Work Center

PWSID Number: None (not Applicable for Nonpublic Systems)

FS System ID: xxxxxxx (from INFRA)

I.Purpose

The purpose of this Bacteriological Monitoring Plan is to identify coliform sample locations and establish monitoring requirements to comply with the Forest Service Manual (FSM 7420).

II. Responsible Charge

The following person will normally be responsible for collecting samples under this program (name, title, address, and phone):

_____ _____

_____ _____

III. Program Elements

1. Basic Routine Monitoring

The Smokey Bear Work Center water system serves a small work center with less than 25 employees and is classified by the Forest Service as a Non Public Nontransient Noncommunity (NPNT) water system. The water system is non public and is not a regulated system under the state regulations. The Forest Service Manual (FSM 7420), however, requires coliform monitoring of this system every month. Two (2) routine sample locations have been identified within the work center. One routine sample shall be collected every month from one of the two designated locations. If a routine sample is invalidated by the lab, a replacement routine sample is required.

2. Increased Routine Monitoring

There is no increased routine monitoring requirement for NPNT systems monitored under the FS direction.

3. Repeat Monitoring

For NPNT systems, FSM requires only one repeat sample following a positive routine sample.

4. Special Monitoring

Sometimes samples are collected to make sure that system is safe before placing into service. The bacteriological samples which are collected for special purposes must be marked as special samples on the sample collection form.

IV. Attachments

Attachment No.1: Routine and Repeat Monitoring Locations

V. Bacteriological Monitoring Plan Prepared By:

Name	*Signature*
Title	*Date*

ATTACHMENT NO. 1
ROUTINE AND REPEAT MONITORING SITES

Water System Name: Smokey Bear Work Center

Month	Routine Sites	Repeat Sample Sites	
Jan	Men's bathroom	Men's bathroom	
Feb	Workshop sink	Workshop sink	
Mar	Men's bathroom	Men's bathroom	
Apr	Workshop sink	Workshop sink	
May	Men's bathroom	Men's bathroom	
Jun	Workshop sink	Workshop sink	
Jul	Men's bathroom	Men's bathroom	
Aug	Workshop sink	Workshop sink	
Sep	Men's bathroom	Men's bathroom	
Oct	Workshop sink	Workshop sink	
Nov	Men's bathroom	Men's bathroom	
Dec	Workshop sink	Workshop sink	

Bacteriological Monitoring Plan
(For Public Hand Pump Systems)

Public Water System Name: Smokey Bear Horse Camp

PWSID Number: NCxxxxxxx (State initials and seven digits)

FS System ID: xxxxxxx (From INFRA)

I. Purpose

The purpose of this Bacteriological Monitoring Plan is to establish required monitoring to comply with the Total Coliform Rule (TCR) and the Forest Service Manual (FSM 7420).

II. Responsible Charge

The following person will normally be responsible for collecting samples under this program (name, title, address, and phone):

_____ _____

_____ _____

III. Program Elements

1. Basic Routine Monitoring

The Smokey Bear Horse Camp water system is a public Transient Noncommunity (TNC) water systems. The system is required by the State to collect one (1) routine water sample for coliform every quarter. The Forest Service Manual (FSM 7420) requires one routine water sample every month. The more stringent of the two requirements shall be followed. **One routine sample shall be collected every month from the handpump.**

2. Increased Routine Monitoring

If any month shows any positive routine or repeat samples, five (5) routine samples are required the following month. The samples shall be taken at reasonably evenly spaced time intervals throughout the month*.
* If the State approves, all five routine samples may be collected at the same time.

(Do not confuse this increased routine monitoring with repeat monitoring in the next section. Repeat monitoring is required to further investigate a positive sample and has to be completed within 24 hours of notification of a positive sample). The system goes back to basic monitoring (1 sample/month) only if the previous month is totally clean (i.e., no positive samples).

3. Repeat Monitoring

Four (4) repeat samples are required within 24 hours of notification of a positive sample by the lab or the State. All four samples will be collected within 24 hours of notification of the positive sample. A single sample may be collected in a 400 milliliter sample bottle, or four samples may be collected in four 100-milliliter bottles. All repeat samples must be collected at the same time.

4. Special Monitoring

Sometimes samples are collected for other reasons than compliance, or to ensure that system is safe before placing into service. The bacteriological samples which are collected for special purposes must be marked as special samples on the sample collection form. If these samples are not marked as special samples, they may be confused by the State for monthly compliance samples.

IV. Attachments

None

V. This Bacteriological Monitoring Plan Prepared By:

Name	*Signature*
Title	*Date*

Bacteriological Monitoring Plan
(For Public Transient Campgrounds/Rec Areas)

Public Water System Name: Clear Lake Recreational Area

PWSID Number: NCxxxxxxx (State initials and seven digits)

FS Systems ID: xxxxx (From INFRA)

I. Purpose

The purpose of this Bacteriological Monitoring Plan is to identify coliform sample locations and establish required monitoring to comply with the Total Coliform Rule (TCR) and the Forest Service Manual (FSM 7420).

II. Responsible Charge

The following person will normally be responsible for collecting samples under this program (name, title, address, and phone):

_____ _____

_____ _____

III. Program Elements

1. Basic Routine Sampling

The Clear Lake Recreational Area water system is a public Transient Noncommunity System. Currently the system is required by the State to collect one (1) routine water sample for coliform every quarter. The Forest Service Manual (FSM 7420) requires one routine water sample every month. The more stringent of the two requirements will be followed. Two (2) routine sample locations have been identified on Attachments 1 and 2. One routine sample shall be collected every month from one of the identified locations. The two sample sites shall be alternated every month.

2. Increased Routine Sampling

If any month shows any positive routine or repeat samples, five (5) routine samples are required the following month. The samples shall be taken at reasonably evenly spaced time intervals throughout the month*.

** Note: If approved by the State, all five routine samples may be collected at the same time.*

(Do not confuse this increased routine monitoring with repeat monitoring in the next section. Repeat monitoring is required to further investigate a positive sample and has to be completed within 24 hours of notification of a positive sample). The system goes back to basic monitoring (1 sample/month) only if the previous month is totally clean (i.e., no positive samples).

3. <u>Repeat Sampling</u>

Four (4) repeat samples are required within 24 hours of notification of a positive sample by the lab or the State.

a. One repeat sample shall be collected from the same site which had positive routine sample.
b. One repeat sample shall be collected downstream of the positive routine site.
c. One repeat sample shall be collected upstream of the positive routine site.
d. One sample can be collected from anywhere in the system including other identified sites on the plan.

4. <u>Special Monitoring</u>

Sometimes samples are collected for other reasons than compliance, or to make sure that system is safe before placing into service. The bacteriological samples which are collected for special purposes must be marked as special samples on the sample collection form. If these samples are not marked as special samples, they may be confused by the State for monthly compliance samples.

IV. Attachments

1—Routine and Repeat Sample Sites

2—Distribution System Map

V. This Bacteriological Monitoring Plan Prepared By:

Name	*Signature*
Title	*Date*

ATTACHMENT 1

REPEAT AND ROUTINE SAMPLE LOCATIONS

Water System: Clear Lake Recreational Area

Months	Routine Site	Repeat Sites
Jan, Mar, May, Jul, Sept, Nov	Toilet No. 1	Toilet No. 1 (same site)
		Beach bathhouse (upstream site)
		Toilet No. 2 (downstream site)
		Bear loop hydrant No. ? (any other site)
Feb, Apr, Jun, Aug, Oct, Dec	Toilet No. 2	Toilet No. 2 (same site)
		Beach bathhouse (upstream site)
		Fox loop hydrant No. ? (downstream)
		Toilet No. 2 (any other site)

ATTACHMENT 2

DISTRIBUTION SYSTEM MAP
SHOWING ROUTINE AND REPEAT MONITORING SITES

Water System: Clear Lake Recreational Area

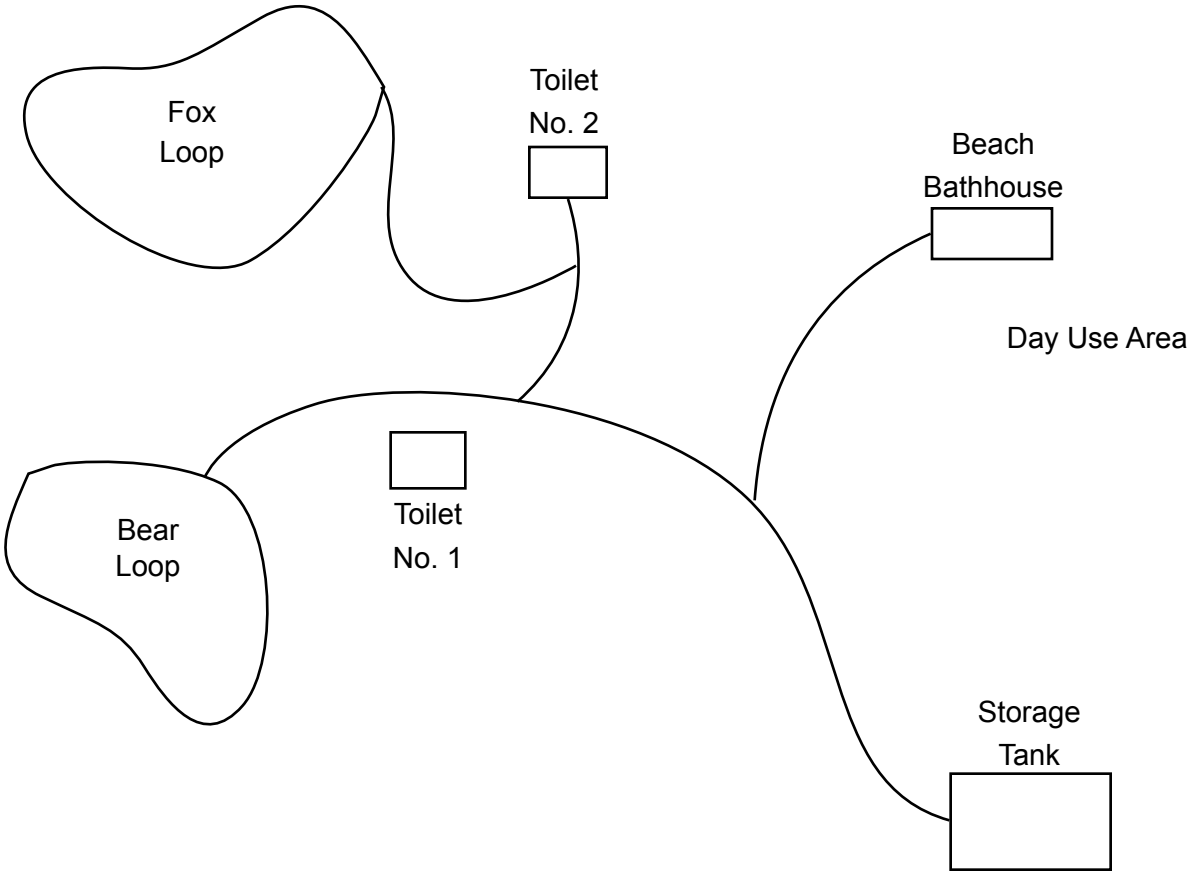

APPENDIX C—VULNERABILITY ASSESSMENT

VULNERABILITY CHECKLIST

Water systems may use this checklist to review their vulnerability to potential threats. Critically evaluate your water system from top to bottom, possibly with the assistance of law enforcement rangers. After personnel identify weaknesses, develop short and long-term plans that address security lapses.

Water System being evaluated: _____

Date of evaluation:_____

Person(s) performing evaluation: _____

1) Is there an emergency/contingency plan in place? Yes ❍ No ❍

2) Is there a routine monitoring plan in place? Yes ❍ No ❍

3) Is there a security plan in place? Yes ❍ No ❍

4) Is there a cross connection control program in-place? Yes ❍ No ❍

5) Are any of these problem areas for the well or surface water source(s)?

	Yes	No
Easy access	❍	❍
Gates unsecured	❍	❍
Located in remote area	❍	❍
Area too large to monitor	❍	❍
Poor quality locks	❍	❍
Broken or unsecured well caps	❍	❍

Possible solutions:
Restrict access to roads
Install gates/locks
Review water shed protection plans
Communicate with other departments/security who can monitor the area
Contact Public Health Consultant for assistance with an emergency preparedness plan

6) Are any of these problem areas for the well house/pump station(s)?

	Yes	No
Doors unlocked/unsecured	❍	❍
Windows unlocked/unsecured	❍	❍
Located in remote area	❍	❍
Poor quality padlocks	❍	❍
Easily accessible by vehicles	❍	❍

Possible solutions:
Install fencing, upgrade locks
Install security cameras or motion detectors
Monitor pump station daily
Restrict vehicle access with gates/barricades

7) Are any of these problem areas for the treatment system?

	Yes	No
Multiple unsecured doors	❍	❍
No Check-in policy for visitors	❍	❍
Easily broken windows	❍	❍
Accessible equipment	❍	❍
Deliveries/drivers checked not checked-in	❍	❍
Unsecured chemical storage	❍	❍
Unlocked gates/fencing	❍	❍

Possible solutions:
Install fencing and upgrade locks
Install security cameras or motion sensors
Place signs that direct visitors to one entry
Implement policy to lock all doors and gates when no workers are present
Install bars and grills over windows
Check-in all deliveries

8) Are any of these problem areas for the storage and distribution systems?

	Yes	No
Storage tanks - unfenced	❍	❍
Storage tank ladders accessible	❍	❍
Storage tank upper hatch unlocked	❍	❍
Manhole and valve pits unsecured	❍	❍

Possible solutions:
Install fencing and upgrade locks
Inspect all manholes, vaults, hatches and meter boxes for signs of tampering
Restrict climbing access to all storage tanks
Secure vents, overflows and hydrants
Work closely with park security to monitor components of distribution system

Additional Comments: _____

_____

_____

_____

APPENDIX D—BIBLIOGRAPHY

Abbott, D.; Gold, L.; Parrish, W. 1999 Troubleshooting guide for well water systems. Gainsville, FL: University of Florida

Code of Federal Regulations. 40 CFR 141. 2003, Office of the Federal Register National Archives and Records.

Huben, Harry Von. 2000. Operator's companion—4th Edition. Northbrook, IL: USA Blue Book.

Kerri, Kenneth D. 1999. Small water system operation and maintenance (a field study training program). Sacramento, CA: California State University, Sacramento.

State of California. 2000. California safe drinking water act and related laws (the Blue Book) 7th Edition. Sacramento, CA: California Department of Health Services, Division of Drinking Water and Environmental Management.

U.S. Department of Agriculture, Forest Service, Forest Service Handbook (FSH) 7409.11.

U.S. Department of Agriculture, Forest Service, FSM 7400, Chapter 20.

U.S. Department of Agriculture, Forest Service, Forest Service Manual (FSM) 7413.9.

U.S. Department of Agriculture, Forest Service, FSM 7413.9, Pacific Southwest Region Supplement.